SLVS171A − SEPTEMBER 1998 − REVISED MAY 1999

- ±1% Reference Over Full Operating Temperature Range
- Synchronous Rectifier Driver for Greater Than 90% Efficiency
- Programmable Reference Voltage Range of 1.3 V to 3.5 V
- User−Selectable Hysteretic Type Control
- Droop Compensation for Improved Load Transient Regulation
- Adjustable Overcurrent Protection
- Programmable Softstart
- Overvoltage Protection
- Active Deadtime Control
- Power Good Output
- Internal Bootstrap Schottky Diode
- Low Supply Current . . . 3-mA Typ

DW OR PWP PACKAGE
(TOP VIEW)

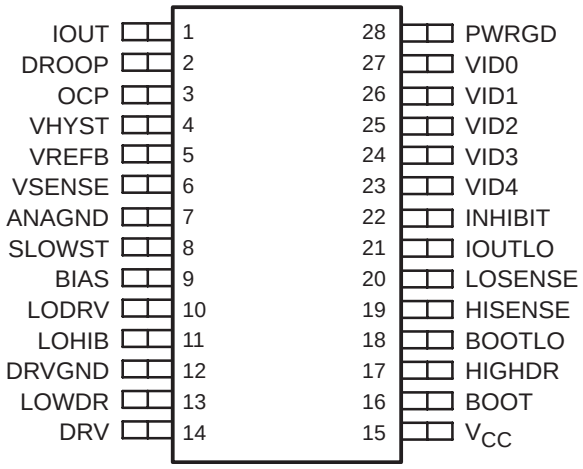

description

The TPS5210 is a synchronous-buck regulator controller which provides an accurate, programmable supply voltage to microprocessors. An internal 5-bit DAC is used to program the reference voltage to within a range of 1.3 V to 3.5 V. The output voltage can be set to be equal to the reference voltage or to some multiple of the reference voltage. A hysteretic controller with user-selectable hysteresis and programmable droop compensation is used to dramatically reduce overshoot and undershoot caused by load transients. Propagation delay from the comparator inputs to the output drivers is less than 250 ns. Overcurrent shutdown and crossover protection for the output drivers combine to eliminate destructive faults in the output FETs. The softstart current source is proportional to the reference voltage, thereby eliminating variation of the softstart timing when changes are made to the output voltage. PWRGD monitors the output voltage and pulls the open-collector output low when the output drops 7% below the nominal output voltage. An overvoltage circuit disables the output drivers if the output voltage rises 15% above the nominal value. The inhibit pin can be used to control power sequencing. Inhibit and undervoltage lockout assures the 12-V supply voltage and system supply voltage (5 V or 3.3 V) are within proper operating limits before the controller starts. Single-supply (12 V) operation is easily accomplished using a low-current divider for the required 5-V signals. The output driver circuits include 2-A drivers with internal 8-V gate-voltage regulators. The high-side driver can be configured either as a ground-referenced driver or as a floating bootstrap driver. The TPS5210 is available in a 28-pin SOIC package and a 28-pin TSSOP PowerPAD™ package. It operates over a junction temperature range of 0°C to 125°C.

AVAILABLE OPTIONS

T_J	PACKAGES	
	SOIC (DW)	TSSOP (PWP)
0°C to 125°C	TPS5210DW	TPS5210PWPR

The DW package is available taped and reeled. Add R suffix to device type (e.g., TPS5210DWR).

Please be aware that an important notice concerning availability, standard warranty, and use in critical applications of Texas Instruments semiconductor products and disclaimers thereto appears at the end of this data sheet.

PRODUCTION DATA information is current as of publication date. Products conform to specifications per the terms of Texas Instruments standard warranty. Production processing does not necessarily include testing of all parameters.

Copyright © 1999, Texas Instruments Incorporated

functional block diagram

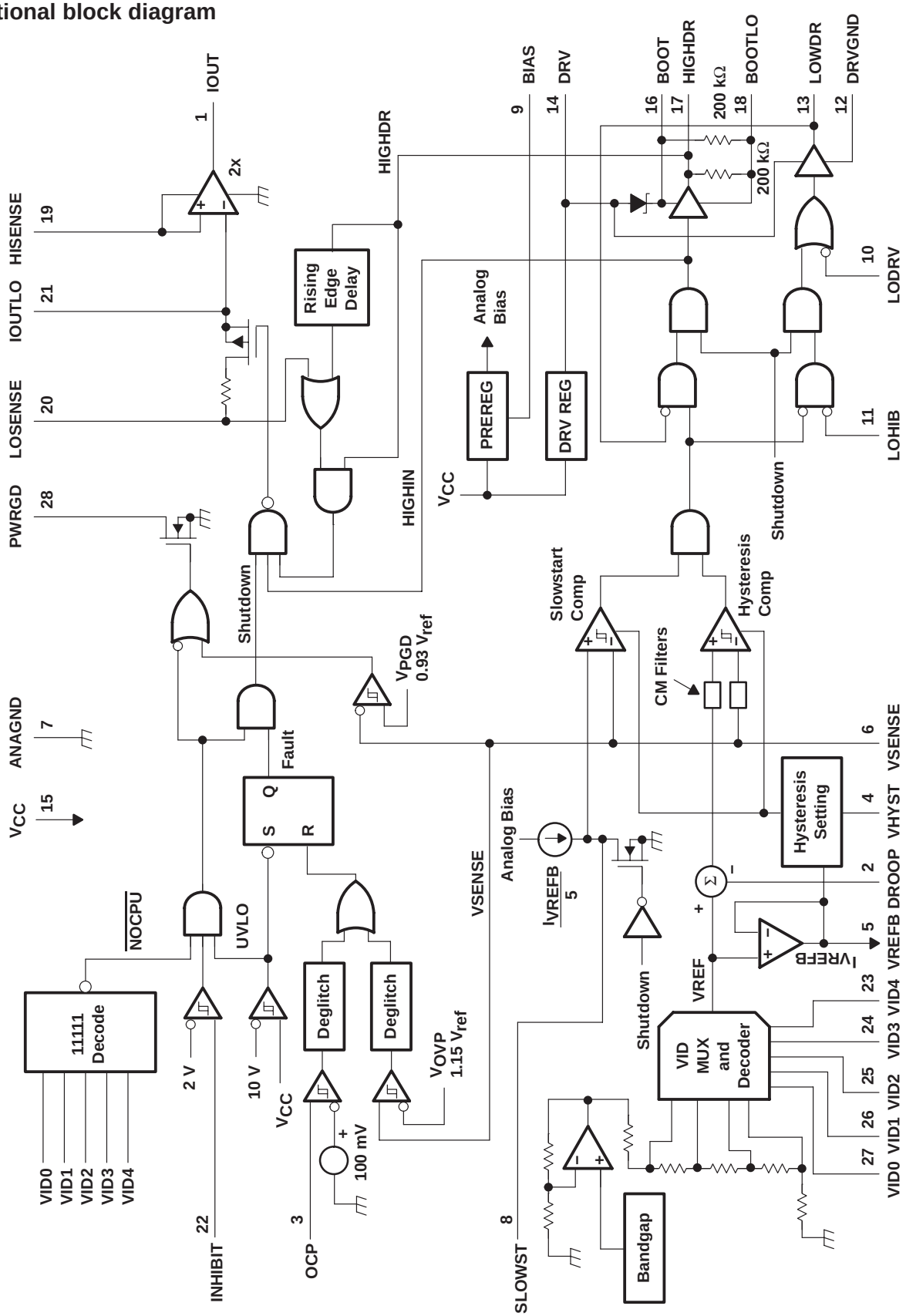

Terminal Functions

TERMINAL		I/O	DESCRIPTION
NAME	NO.		
ANAGND	7		Analog ground
BIAS	9	O	Analog BIAS pin. A 1-µF ceramic capacitor should be connected from BIAS to ANAGND.
BOOT	16	I	Bootstrap. Connect a 1-µF low-ESR capacitor from BOOT to BOOTLO.
BOOTLO	18	O	Bootstrap low. Connect BOOTLO to the junction of the high-side and low-side FETs for floating drive configuration. Connect BOOTLO to PGND for ground reference drive configuration.
DROOP	2	I	Droop voltage. Voltage input used to set the amount of output-voltage set-point droop as a function of load current. The amount of droop compensation is set with a resistor divider between IOUT and ANAGND.
DRV	14	O	Drive regulator for the FET drivers. A 1-µF ceramic capacitor should be connected from DRV to DRVGND.
DRVGND	12		Drive ground. Ground for FET drivers. Connect to FET PWRGND.
HIGHDR	17	O	High drive. Output drive to high-side power switching FETs
HISENSE	19	I	High current sense. For current sensing across high-side FETs, connect to the drain of the high-side FETs; for optional resistor sensing scheme, connect to power supply side of current-sense resistor placed in series with high-side FET drain.
INHIBIT	22	I	Disables the drive signals to the MOSFET drivers. Can also serve as UVLO for system logic supply (either 3.3 V or 5 V).
IOUT	1	O	Current out. Output voltage on this pin is proportional to the load current as measured across the Rds(on) of the high-side FETs. The voltage on this pin equals $2 \times Rds(on) \times IOUT$. In applications where very accurate current sensing is required, a sense resistor should be connected between the input supply and the drain of the high-side FETs.
IOUTLO	21	O	Current sense low output. This is the voltage on the LOSENSE pin when the high-side FETs are on. A ceramic capacitor should be connected from IOUTLO to HISENSE to hold the sensed voltage while the high-side FETs are off. Capacitance range should be between 0.033 µF and 0.1 µF.
LODRV	10	I	Low drive enable. Normally tied to 5 V. To activate the low-side FETs as a crowbar, pull LODRV low.
LOHIB	11	I	Low side inhibit. Connect to the junction of the high and low side FETs to control the anti-cross-conduction and eliminate shoot-through current. Disabled when configured in crowbar mode.
LOSENSE	20	I	Low current sense. For current sensing across high-side FETs, connect to the source of the high-side FETs; for optional resistor sensing scheme, connect to high-side FET drain side of current-sense resistor placed in series with high-side FET drain.
LOWDR	13	O	Low drive. Output drive to synchronous rectifier FETs
OCP	3	I	Over current protection. Current limit trip point is set with a resistor divider between IOUT and ANAGND.
PWRGD	28	O	Power good. Power Good signal goes high when output voltage is within 7% of voltage set by VID pins. Open-drain output.
SLOWST	8	O	Slow Start (soft start). A capacitor from SLOWST to ANAGND sets the slowstart time. Slowstart current = $I_{VREFB}/5$
V_{CC}	15		12-V supply. A 1-µF ceramic capacitor should be connected from V_{CC} to DRVGND.
VHYST	4	I	HYSTERESIS set pin. The hysteresis is set with a resistor divider from V_{REFB} to ANAGND. The hysteresis window = $2 \times (V_{REFB} - V_{HYST})$
VID0	27	I	Voltage Identification input 0
VID1	26	I	Voltage Identification input 1
VID2	25	I	Voltage Identification input 2
VID3	24	I	Voltage Identification input 3
VID4	23	I	Voltage Identification input 4. Digital inputs that set the output voltage of the converter. The code pattern for setting the output voltage is located in Table 1. Internally pulled up to 5 V with a resistor divider biased from V_{CC}.
VREFB	5	O	Buffered reference voltage from VID network
VSENSE	6	I	Voltage sense Input. To be connected to converter output voltage bus to sense and control output voltage. It is recommended an RC low pass filter be connected at this pin to filter noise.

detailed description

V_{REF}

The reference/voltage identification (VID) section consists of a temperature-compensated bandgap reference and a 5-bit voltage selection network. The 5 VID terminals are inputs to the VID selection network and are TTL-compatible inputs internally pulled up to 5 V by a resistor divider connected to V_{CC}. The VID codes conform to the Intel *VRM 8.3 DC-DC Converter Specification* for voltage settings between 1.8 V and 3.5 V, and they are decremented by 50 mV, down to 1.3 V, for the lower VID settings. Voltages higher than V_{REF} can be implemented using an external divider. Refer to Table 1 for the VID code settings. The output voltage of the VID network, V_{REF}, is within ±1% of the nominal setting over the VID range of 1.3 V to *2*.5 V, including a junction temperature range of 5°C to +125°C, and a V_{CC} supply voltage range of 11.4 V to 12.6 V. The output of the reference/VID network is indirectly brought out through a buffer to the V_{REFB} pin. The voltage on this pin will be within 2% of V_{REF}. It is not recommended to drive loads with V_{REFB}, other than setting the hysteresis of the hysteretic comparator, because the current drawn from V_{REFB} sets the charging current for the slowstart capacitor. Refer to the slowstart section for additional information.

hysteretic comparator

The hysteretic comparator regulates the output voltage of the synchronous-buck converter. The hysteresis is set by 2 external resistors and is centered on V_{REF}. The 2 external resistors form a resistor divider from V_{REFB} to ANAGND, with the output voltage connecting to the V_{HYST} pin. The hysteresis of the comparator will be equal to twice the voltage *difference* between the V_{REFB} and V_{HYST} pins. The propagation delay from the comparator inputs to the driver outputs is 250 ns (maximum). The maximum hysteresis setting is 60 mV.

low-side driver

The low-side driver is designed to drive low-Rds(on) n-channel MOSFETs. The current rating of the driver is 2 A, source and sink. The bias to the low-side driver is internally connected to the DRV regulator.

high-side driver

The high-side driver is designed to drive low-Rds(on) n-channel MOSFETs. The current rating of the driver is 2 A, source and sink. The high-side driver can be configured either as a ground-referenced driver or as a floating bootstrap driver. When configured as a floating driver, the bias voltage to the driver is developed from the DRV regulator. The internal bootstrap diode, connected between the DRV and BOOT pins, is a Schottky for improved drive efficiency. The maximum voltage that can be applied between BOOT and DRVGND is 30 V. The driver can be referenced to ground by connecting BOOTLO to DRVGND, and connecting BOOT to either DRV or V_{CC}.

deadtime control

Deadtime control prevents shoot-through current from flowing through the main power FETs during switching transitions by actively controlling the turn-on times of the MOSFET drivers. The high-side driver is not allowed to turn on until the gate-drive voltage to the low-side FETs is below 2 V; the low-side driver is not allowed to turn on until the voltage at the junction of the high-side and low-side FETs (Vphase) is below 2 V.

current sensing

Current sensing is achieved by sampling and holding the voltage across the high-side power FETs while the high-side FETs are on. The sampling network consists of an internal 60-Ω switch and an external ceramic hold capacitor. Recommended value of the hold capacitor is between 0.033 μF and 0.1 μF. Internal logic controls the turn-on and turn-off of the sample/hold switch such that the switch does not turn on until the Vphase voltage transitions high, and the switch turns off when the input to the high-side driver goes low. The sampling will occur only when the high-side FETs are conducting current. The voltage on the IOUT pin equals 2 times the sensed high-side voltage. In applications where a higher accuracy in current sensing is required, a sense resistor can be placed in series with the high-side FETs, and the voltage across the sense resistor can be sampled by the current sensing circuit.

detailed description (continued)

droop compensation

The droop compensation network reduces the load transient overshoot/undershoot on V_O, relative to V_{REF}. V_O is programmed to a voltage greater than V_{REF} by an external resistor divider from V_O to VSENSE to reduce the undershoot on V_O during a low-to-high load transient. The overshoot during a high-to-low load transient is reduced by subtracting the voltage on DROOP from V_{REF}. The voltage on IOUT is divided with an external resistor divider, and connected to DROOP.

inhibit

INHIBIT is a TTL-compatible digital input used to enable the controller. When INHIBIT is low, the output drivers are low and the slowstart capacitor is discharged. When INHIBIT goes high, the short across the slowstart capacitor is released and normal converter operation begins. When the system-logic supply is connected to INHIBIT, it also controls power sequencing by locking out controller operation until the system-logic supply exceeds the input threshold voltage of the inhibit circuit. The 12-V supply and the system logic supply (either 5 V or 3.3 V) must be above UVLO thresholds before the controller is allowed to start up. The start threshold is 2.1 V and the hysteresis is 100 mV for the INHIBIT comparator.

V_{CC} undervoltage lockout (UVLO)

The undervoltage lockout circuit disables the controller while the V_{CC} supply is below the 10-V start threshold during power up. When the controller is disabled, the output drivers will be low and the slowstart capacitor is discharged. When V_{CC} exceeds the start threshold, the short across the slowstart capacitor is released and normal converter operation begins. There is a 2-V hysteresis in the undervoltage lockout circuit for noise immunity.

slowstart

The slowstart circuit controls the rate at which V_O powers up. A capacitor is connected between SLOWST and ANAGND and is charged by an internal current source. The current source is proportional to the reference voltage, so that the charging rate of C_{slowst} is proportional to the reference voltage. By making the charging current proportional to V_{REF}, the power-up time for V_O will be independent of V_{REF}. Thus, C_{SLOWST} can remain the same value for all VID settings. The slowstart charging current is determined by the following equation:

$$I_{slowstart} = I(V_{REFB}) / 5 \quad \text{(amps)}$$

Where $I(V_{REFB})$ is the current flowing out of V_{REFB}.

It is recommended that no additional loads be connected to V_{REFB}, other than the resistor divider for setting the hysteresis voltage. The maximum current that can be sourced by the V_{REFB} circuit is 500 µA. The equation for setting the slowstart time is:

$$t_{SLOWST} = 5 \times C_{SLOWST} \times R_{VREFB} \quad \text{(seconds)}$$

Where R_{VREFB} is the total external resistance from V_{REFB} to ANAGND.

power good

The power-good circuit monitors for an undervoltage condition on V_O. If V_O is 7% below V_{REF}, then the PWRGD pin is pulled low. PWRGD is an open-drain output.

overvoltage protection

The overvoltage protection (OVP) circuit monitors V_O for an overvoltage condition. If V_O is 15% above V_{REF}, then a fault latch is set and both output drivers are turned off. The latch will remain set until V_{CC} goes below the undervoltage lockout value. A 3-µs deglitch timer is included for noise immunity. Refer to the LODRV section for information on how to protect the microprocessor against overvoltages due to a shorted fault across the high-side power FET.

detailed description (continued)

overcurrent protection

The overcurrent protection (OCP) circuit monitors the current through the high-side FET. The overcurrent threshold is adjustable with an external resistor divider between IOUT and ANAGND, with the divider voltage connected to the OCP pin. If the voltage on OCP exceeds 100 mV, then a fault latch is set and the output drivers are turned off. The latch will remain set until V_{CC} goes below the undervoltage lockout value. A 3-µs deglitch timer is included for noise immunity. The OCP circuit is also designed to protect the high-side power FET against a short-to-ground fault on the terminal common to both power FETs.

drive regulator

The drive regulator provides drive voltage to the output drivers. The minimum drive voltage is 7 V. The minimum short circuit current is 100 mA. Connect a 1-µF ceramic capacitor from DRV to DRVGND.

LODRV

The LODRV circuit is designed to protect the microprocessor against overvoltages that can occur if the high-side power FETs become shorted. External components to sense an overvoltage condition are required to use this feature. When an overvoltage fault occurs, the low-side FETs are used as a crowbar. LODRV is pulled low and the low-side FET will be turned on, overriding all control signals inside the TPS5210 controller. The crowbar action will short the input supply to ground through the faulted high-side FETs and the low-side FETs. A fuse in series with V_{in} should be added to disconnect the short-circuit.

Table 1. Voltage Identification Codes

VID TERMINALS (0 = GND, 1 = floating or pull-up to 5 V)					V_{REF}
VID4	VID3	VID2	VID1	VID0	(Vdc)
0	1	1	1	1	1.30
0	1	1	1	0	1.35
0	1	1	0	1	1.40
0	1	1	0	0	1.45
0	1	0	1	1	1.50
0	1	0	1	0	1.55
0	1	0	0	1	1.60
0	1	0	0	0	1.65
0	0	1	1	1	1.70
0	0	1	1	0	1.75
0	0	1	0	1	1.80
0	0	1	0	0	1.85
0	0	0	1	1	1.90
0	0	0	1	0	1.95
0	0	0	0	1	2.00
0	0	0	0	0	2.05
1	1	1	1	1	No CPU
1	1	1	1	0	2.10
1	1	1	0	1	2.20
1	1	1	0	0	2.30
1	1	0	1	1	2.40
1	1	0	1	0	2.50
1	1	0	0	1	2.60

Table 1. Voltage Identification Codes (Continued)

VID TERMINALS (0 = GND, 1 = floating or pull-up to 5 V)					V_{REF}
VID4	VID3	VID2	VID1	VID0	(Vdc)
1	1	0	0	0	2.70
1	0	1	1	1	2.80
1	0	1	1	0	2.90
1	0	1	0	1	3.00
1	0	1	0	0	3.10
1	0	0	1	1	3.20
1	0	0	1	0	3.30
1	0	0	0	1	3.40
1	0	0	0	0	3.50

absolute maximum ratings over operating virtual junction temperature (unless otherwise noted)†

Supply voltage range, V_{CC} (see Note1) . . . . . −0.3 V to 14 V
Input voltage range: BOOT to DRVGND (High-side Driver ON) . . . . . −0.3 V to 30 V
BOOT to HIGHDRV . . . . . −0.3 V to 15 V
BOOT to BOOTLO . . . . . −0.3 V to 15 V
INHIBIT, VIDx, LODRV . . . . . −0.3 V to 7.3 V
PWRGD, OCP, DROOP . . . . . −0.3 V to 7 V
LOHIB, LOSENSE, IOUTLO, HISENSE . . . . . −0.3 V to 14 V
VSENSE . . . . . −0.3 V to 5 V
Voltage difference between ANAGND and DRVGND . . . . . ±0.5 V
Output current, V_{REFB} . . . . . 0.5 mA
Short circuit duration, DRV . . . . . Continuous
Continuous total power dissipation . . . . . See Dissipation Rating Table
Operating virtual junction temperature range, T_J . . . . . 0°C to 125°C
Storage temperature range, T_{stg} . . . . . −65°C to 150°C
Lead temperature soldering 1,6 mm (1/16 inch) from case for 10 seconds . . . . . 260°C

† Stresses beyond those listed under “absolute maximum ratings” may cause permanent damage to the device. These are stress ratings only, and functional operation of the device at these or any other conditions beyond those indicated under “recommended operating conditions” is not implied. Exposure to absolute-maximum-rated conditions for extended periods may affect device reliability.

NOTE 1: Unless otherwise specified, all voltages are with respect to ANAGND.

DISSIPATION RATING TABLE

PACKAGE	$T_A \leq 25°C$ POWER RATING	DERATING FACTOR ABOVE $T_A = 25°C$	$T_A = 70°C$ POWER RATING	$T_A = 85°C$ POWER RATING
DW	1200 mW	12 mW/°C	660 mW	480 mW
PWP	1150 mW	11.5 mW/°C	630 mW	460 mW

recommended operating conditions

	MIN	MAX	UNIT
Supply voltage, V_{CC}	11.4	13	V
Input voltage, BOOT to DRVGND	0	28	V
Input voltage, BOOT to BOOTLO	0	13	V
Input voltage, INHIBIT, VIDx, LODRV, PWRGD, OCP, DROOP	0	6	V
Input voltage, LOHIB, LOSENSE, IOUTLO, HISENSE	0	13	V
Input voltage, VSENSE	0	4.5	V
Voltage difference between ANAGND and DRVGND	0	±0.2	V
Output current, V_{REFB}†	0	0.4	mA

† Not recommended to load V_{REFB} other than to set hystersis since I_{VREFB} sets slowstart time.

electrical characteristics over recommended operating virtual junction temperature range, V_{CC} = 12 V, I_{DRV} = 0 A (unless otherwise noted)

reference/voltage identification

PARAMETER		TEST CONDITIONS	MIN	TYP	MAX	UNIT
V_{REF}	Reference voltage accuracy, (Includes offset of droop compensation network)	V_{CC} = 11.4 to 12.6 V, 1.3 V ≤ V_{REF} ≤ 2.5 V	−0.01		0.01	V/V
		V_{CC} = 11.4 to 12.6 V, V_{REF} = 2.6 V	−0.0104		0.0104	V/V
		V_{CC} = 11.4 to 12.6 V, V_{REF} = 2.7 V	−0.0108		0.0108	V/V
		V_{CC} = 11.4 to 12.6 V, V_{REF} = 2.8 V	−0.0112		0.0112	V/V
		V_{CC} = 11.4 to 12.6 V, V_{REF} = 2.9 V	−0.0116		0.0116	V/V
		V_{CC} = 11.4 to 12.6 V, V_{REF} = 3 V	−0.0120		0.0120	V/V
		V_{CC} = 11.4 to 12.6 V, V_{REF} = 3.1 V	−0.0124		0.0124	V/V
		V_{CC} = 11.4 to 12.6 V, V_{REF} = 3.2 V	−0.0128		0.0128	V/V
		V_{CC} = 11.4 to 12.6 V, V_{REF} = 3.3 V	−0.0132		0.0132	V/V
		V_{CC} = 11.4 to 12.6 V, V_{REF} = 3.4 V	−0.0136		0.0136	V/V
		V_{CC} = 11.4 to 12.6 V, V_{REF} = 3.5 V	−0.0140		0.0140	V/V
	Cumulative reference accuracy (see Note 2)	V_{REF} = 1.3 V, Hysteresis window = 30 mV	−0.011		0.011	V/V
		V_{REF} =1.3 V, Hysteresis, T_J = 60°C window = 30 mV (see Note 3)	−0.008		0.008	
		V_{REF} = 1.9 Vv, Hysteresis, T_J = 60°C window = 30 mV (see Note 3)	−0.0090		0.0090	
		V_{REF} = 3.5 V, Hysteresis, T_J = 60°C window = 30 mV (see Note 3)	−0.0115		0.0115	
VIDx	High-level input voltage		2.25			V
VIDx	Low-level input voltage				1	V
V_{REFB}	Output voltage	I_{VREFB} = 50 µA	V_{REF}−2%	V_{REF}	V_{REF}+2%	V
	Output regulation	10 µA ≤ I_O ≤ 500 µA		2		mV
VIDx	Input resistance	VIDx = 0 V	36	73	95	kΩ
	Input pull-up voltage divider		4.8	4.9	5	V

NOTES: 2. Cumulative reference accuracy is the combined accuracy of the reference voltage and the input offset voltage of the hysteretic comparator. Cumulative accuracy equals the average of the high-level and low-level thresholds of the hysteretic comparator.
3. This parameter is ensured by design and is not production tested.

electrical characteristics over recommended operating virtual junction temperature range, V_{CC} = 12 V, I_{DRV} = 0 A (unless otherwise noted) (continued)

power good

PARAMETER		TEST CONDITIONS	MIN	TYP	MAX	UNIT
	Undervoltage trip threshold		90	93	95	$\%V_{REF}$
V_{OL}	Low-level output voltage	I_O = 5 mA		0.5	0.75	V
I_{OH}	High-level input current	V_{PWRGD} = 6 V		1		µA
V_{hys}	Hysteresis voltage		1.3	2.9	4.5	$\%V_{REF}$

slowstart

PARAMETER	TEST CONDITIONS	MIN	TYP	MAX	UNIT
Charge current	V_{SLOWST} = 0.5 V, V_{VREFB} = 1.3 V, I_{VREFB} = 65 µA	10.4	13	15.6	µA
Discharge current	V_{SLOWST} = 1 V		3		mA
Comparator input offset voltage				10	mV
Comparator input bias current	See Note 3		10	100	nA
Comparator hysteresis		−7.5		7.5	mV

NOTE 3: This parameter is ensured by design and is not production tested.

hysteretic comparator

PARAMETER	TEST CONDITIONS	MIN	TYP	MAX	UNIT
Input offset voltage	V_{DROOP} = 0 V (see Note 3)	−2.5		2.5	mV
Input bias current	See Note 3			500	nA
Hysteresis accuracy	$V_{REFB} - V_{HYST}$ = 15 mV (Hysteresis window = 30 mV)	−3.5		3.5	mV
Maximum hysteresis setting	$V_{REFB} - V_{HYST}$ = 30 mV		60		mV

NOTE 3: This parameter is ensured by design and is not production tested.

electrical characteristics over recommended operating virtual junction temperature range, V_{CC} = 12 V, I_{DRV} = 0 A (unless otherwise noted) (continued)

high-side VDS sensing

PARAMETER		TEST CONDITIONS	MIN	TYP	MAX	UNIT
	Gain			2		V/V
	Initial accuracy	$V_{HISENSE}$ = 12 V, $V_{LOSENSE}$ = 11.9 V, Differential input to V_{ds} sensing amp = 100 mV	194		206	mV
IOUTLO	Sink current	5 V ≤ V_{IOUTLO} ≤ 13 V			250	nA
IOUT	Source current	V_{IOUT} = 0.5 V, $V_{HISENSE}$ = 12 V, V_{IOUTLO} = 11.5 V	500			µA
IOUT	Sink current	V_{IOUT} = 0.05 V, $V_{HISENSE}$ = 12 V, V_{IOUTLO} = 12 V	50			µA
	Output voltage swing	$V_{HISENSE}$ = 11 V, R_{IOUT} = 10 kΩ	0		2	V
		$V_{HISENSE}$ = 4.5 V, R_{IOUT} = 10 kΩ	0		1.5	V
		$V_{HISENSE}$ = 3 V, R_{IOUT} = 10 kΩ	0		0.75	V
LOSENSE	High-level input voltage	$V_{HISENSE}$ = 4.5 V (see Note 3)	2.85			V
	Low-level input voltage				2.4	V
	Sample/hold resistance	11.4 V ≤ $V_{HISENSE}$ ≤ 12.6 V, LOSENSE connected to HISENSE, $V_{HISENSE}$ − V_{IOUTLO} = 0.15 V	50	60	80	Ω
		4.5 V ≤ $V_{HISENSE}$ ≤ 5.5 V, LOSENSE connected to HISENSE, $V_{HISENSE}$ − V_{IOUTLO} = 0.15 V	62	85	123	
		3 V ≤ $V_{HISENSE}$ ≤ 3.6 V, LOSENSE connected to HISENSE, $V_{HISENSE}$ − V_{IOUTLO} = 0.15 V	67	95	144	
CMRR		$V_{HISENSE}$ = 12.6 V to 3 V, $V_{HISENSE}$ − V_{OUTLO} = 100 mV	69	75		dB

NOTE 3. This parameter is ensured by design and is not production tested.

inhibit

PARAMETER	TEST CONDITIONS	MIN	TYP	MAX	UNIT
Start threshold		1.9	2.1	2.35	V
Hysteresis		0.08	0.1	0.12	V
Stop threshold		1.85			V

overvoltage protection

PARAMETER	TEST CONDITIONS	MIN	TYP	MAX	UNIT
Overvoltage trip threshold		112	115	120	$\%V_{REF}$
Hysteresis	See Note 3		10		mV

NOTE 3: This parameter is ensured by design and is not production tested.

overcurrent protection

PARAMETER	TEST CONDITIONS	MIN	TYP	MAX	UNIT
OCP trip threshold		90	100	110	mV
Input bias current				100	nA

electrical characteristics over recommended operating virtual junction temperature range, V_{CC} = 12 V, I_{DRV} = 0 A (unless otherwise noted) (continued)

deadtime

PARAMETER		TEST CONDITIONS	MIN	TYP	MAX	UNIT
LOHIB	High-level input voltage		2.4			V
	Low-level input voltage				1.4	
LOWDR	High-level input voltage	See Note 3	3			V
	Low-level input voltage	See Note 3			1.7	

NOTE 3: This parameter is ensured by design and is not production tested.

LODRV

PARAMETER		TEST CONDITIONS	MIN	TYP	MAX	UNIT
LODRV	High-level input voltage		1.85			V
	Low-level input voltage				0.95	

droop compensation

PARAMETER	TEST CONDITIONS	MIN	TYP	MAX	UNIT
Initial accuracy	V_{DROOP} = 50 mV	46		54	mV

drive regulator

PARAMETER	TEST CONDITIONS	MIN	TYP	MAX	UNIT
Output voltage	11.4 V ≤ V_{CC} ≤ 12.6 V, I_{DRV} = 50 mA	7		9	V
Output regulation	1 mA ≤ I_{DRV} ≤ 50 mA		100		mV
Short-circuit current		100			mA

bias regulator

PARAMETER	TEST CONDITIONS	MIN	TYP	MAX	UNIT
Output voltage	11.4 V ≤ V_{CC} ≤ 12.6 V, See Note 4	6			V

NOTE 4: The bias regulator is designed to provide a quiet bias supply for the TPS5210 controller. External loads should not be driven by the bias regulator.

input undervoltage lockout

PARAMETER	TEST CONDITIONS	MIN	TYP	MAX	UNIT
Start threshold		9.25	10	10.75	V
Hysteresis		1.9	2	2.2	V
Stop threshold		7.5			V

electrical characteristics over recommended operating virtual junction temperature range, V_{CC} = 12 V, I_{DRV} = 0 A (unless otherwise noted) (continued)

output drivers

PARAMETER		TEST CONDITIONS	MIN	TYP	MAX	UNIT
Peak output current (see Note 5)	High-side sink	Duty cycle < 2%, t_{pw} < 100 µs, T_J = 125°C, $V_{BOOT} - V_{BOOTLO}$ = 6.5 V, V_{HIGHDR} = 1.5 V (source) or 6 V (sink), See Note 3	2			A
	High-side source		2			
	Low-side sink	Duty Cycle < 2%, t_{pw} < 100 µs, T_J = 125°C, V_{DRV} = 6.5 V, V_{LOWDR} = 1.5 V (source) or 5 V (sink), See Note 3	2			
	Low-side source		2			
Output resistance (see Note 5)	High-side sink	T_J = 125°C, $V_{BOOT} - V_{BOOTLO}$ = 6.5 V, V_{HIGHDR} = 6 V (source) or 0.5 V (sink)			3	Ω
	High-side source				45	
	Low-side sink	T_J = 125°C, V_{DRV} = 6.5 V, V_{LOWDR} = 6 V (source) or 0.5 V (sink)			5.7	
	Low-side source				45	

NOTES: 3. This parameter is ensured by design and is not production tested.
5. The pull-up/pull-down circuits of the drivers are bipolar and MOSFET transistors in parallel. The peak output current rating is the combined current from the bipolar and MOSFET transistors. The output resistance is the $R_{ds(on)}$ of the MOSFET transistor when the voltage on the driver output is less than the saturation voltage of the bipolar transistor.

supply current

PARAMETER		TEST CONDITIONS	MIN	TYP	MAX	UNIT
V_{CC}	Supply voltage range		11.4	12	13	V
V_{CC}	Quiescent current	$V_{INHIBIT}$ = 5 V, V_{CC} > 10.75 V at startup, VID code ≠ 11111, V_{BOOTLO} = 0 V		3	10	mA
		$V_{INHIBIT}$ = 5 V, V_{CC} > 10.75 V at startup, C_{HIGHDR} = 50 pF, f_{SWX} = 200 kHz, VID code ≠ 11111, V_{BOOTLO} = 0 V, C_{LOWDR} = 50 pF, See Note 3		5		
	High-side driver quiescent current	$V_{INHIBIT}$ = 0 V or VID code = 11111 or V_{CC} < 9.25 V at startup, V_{BOOT} = 13 V, V_{BOOTLO} = 0 V			80	µA
		$V_{INHIBIT}$ = 5 V, V_{BOOT} = 13 V, C_{HIGHDR} = 50 pF, VID code ≠ 11111, V_{CC} > 10.75 V at startup, V_{BOOTLO} = 0 V, f_{SWX} = 200 kHz (see Note 3)		2		mA

NOTE 3: This parameter is ensured by design and is not production tested.

switching characteristics over recommended operating virtual-junction temperature range, V_{CC} = 12 V, I_{DRV} = 0 A (unless otherwise noted)

PARAMETER		TEST CONDITIONS	MIN	TYP	MAX	UNIT
Propagation delay	VSENSE to HIGHDR or LOWDR (excluding dead-time)	1.3 V ≤ V_{VREF} ≤ 3.5 V, 10 mV overdrive (see Note 3)		150	250	ns
	OCP comparator	See Note 3		1		µs
	OVP comparator	See Note 3		1		µs
	PWRGD comparator	See Note 3		1		µs
	SLOWST comparator	Overdrive = 10 mV (see Note 3)		560	900	ns
Rise time	HIGHDR output	C_L = 9 nF, V_{BOOT} = 6.5 V, V_{BOOTLO} = 0 V, T_J = 125°C			60	ns
	LOWDR output	C_L = 9 nF, V_{DRV} = 6.5 V, T_J = 125°C			60	ns
Fall time	HIGHDR output	C_L = 9 nF, V_{BOOT} = 6.5 V, V_{BOOTLO} = 0 V, T_J = 125°C			60	ns
	LOWDR output	C_L = 9 nF, V_{DRV} = 6.5 V, T_J = 125°C			60	ns
Deglitch time (Includes comparator propagation delay)	OCP	See Note 3	2		5	µs
	OVP	See Note 3	2		5	µs
Response time	High-side VDS sensing	$V_{HISENSE}$ = 12 V, V_{IOUTLO} pulsed from 12 V to 11.9 V, 100 ns rise/fall times (see Note 3)			2	µs
	High-side VDS sensing	$V_{HISENSE}$ = 4.5 V, V_{IOUTLO} pulsed from 4.5 V to 4.4 V, 100 ns rise/fall times (see Note 3)			3	µs
	High-side VDS sensing	$V_{HISENSE}$ = 3 V, V_{IOUTLO} pulsed from 3 V to 2.9 V, 100 ns rise/fall times (see Note 3)			3	µs
Short-circuit protection rising-edge delay	SCP	LOSENSE = 0 V (see Note 3)	300		500	ns
Turn-on/turn-off delay	V_{DS} sensing sample/hold switch	3 V ≤ $V_{HISENSE}$ ≤ 11 V, $V_{LOSENSE}$ = $V_{HISENSE}$ (see Note 3)	30		100	ns
Crossover delay time	LOWDR to HIGHDRV, and LOHIB to LOWDR	See Note 3	30		100	ns
Prefilter pole frequency	Hysteretic comparator	See Note 3		5		MHz
Propagation delay	LODRV	See Note 3			400	ns

NOTE 3: This parameter is ensured by design and is not production tested.

TYPICAL CHARACTERISTICS

SLOWSTART TIME vs SLOWSTART CAPACITANCE

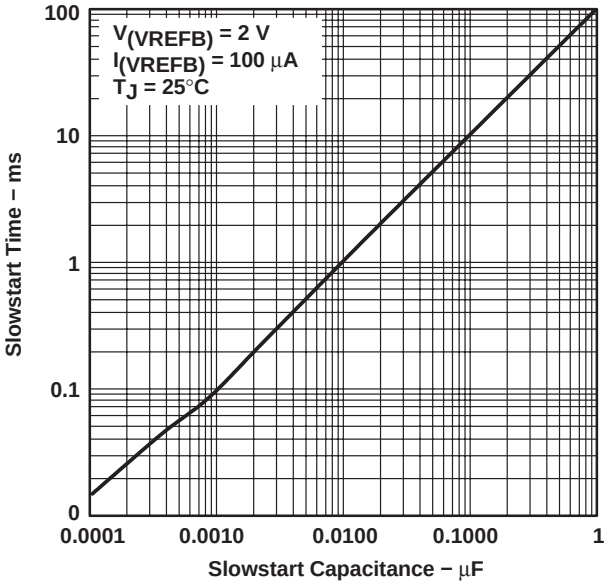

Figure 1

SLOWSTART TIME vs SUPPLY CURRENT (VREFB)

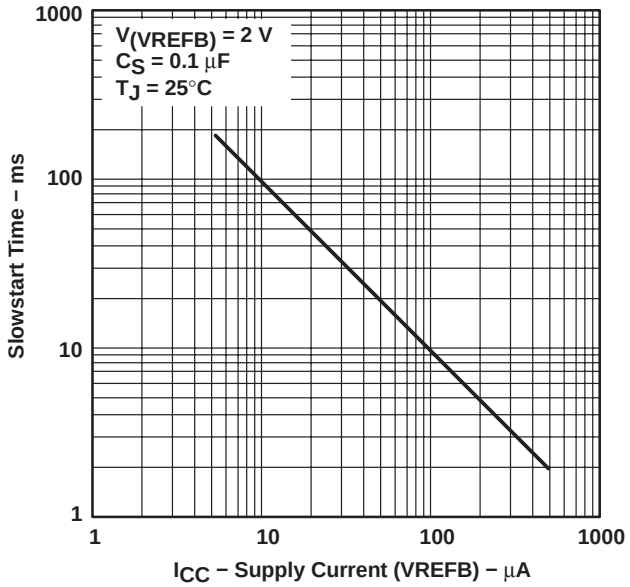

Figure 2

DRIVER OUTPUT RISE TIME vs LOAD CAPACITANCE

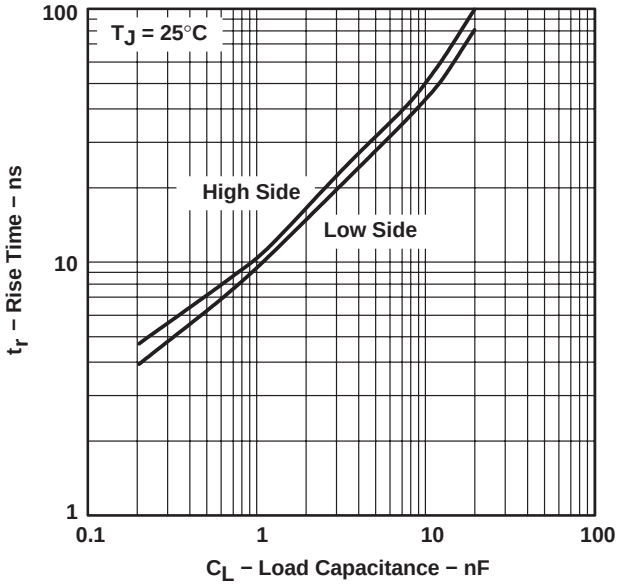

Figure 3

DRIVER OUTPUT FALL TIME vs LOAD CAPACITANCE

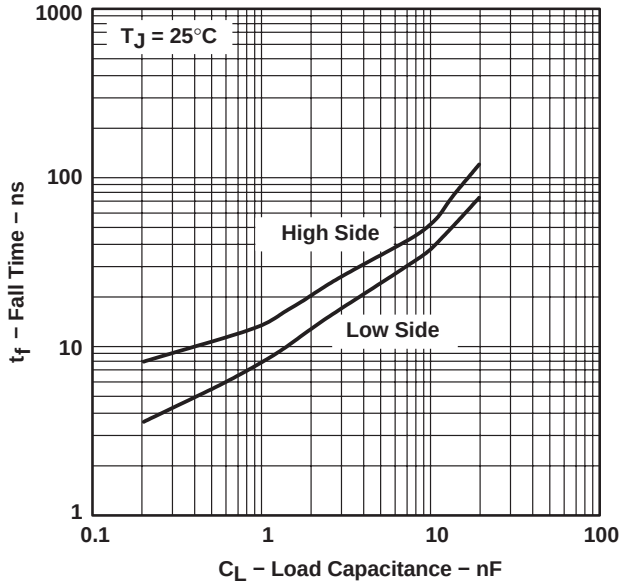

Figure 4

TYPICAL CHARACTERISTICS

OVP THRESHOLD vs JUNCTION TEMPERATURE

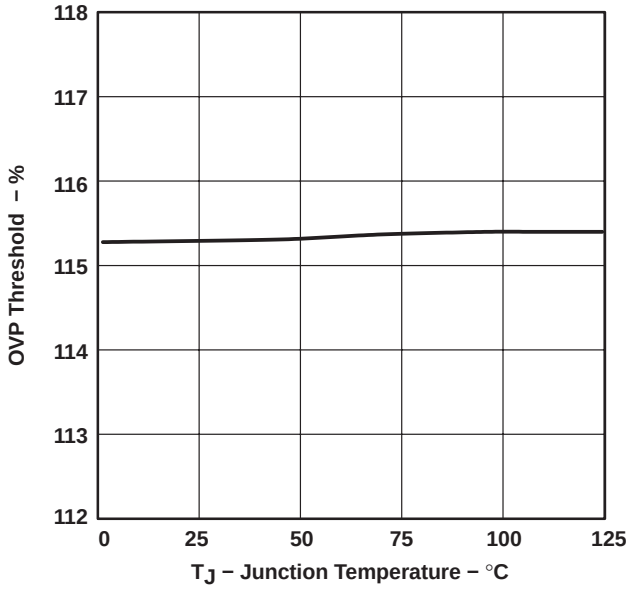

Figure 5

OCP THRESHOLD VOLTAGE vs JUNCTION TEMPERATURE

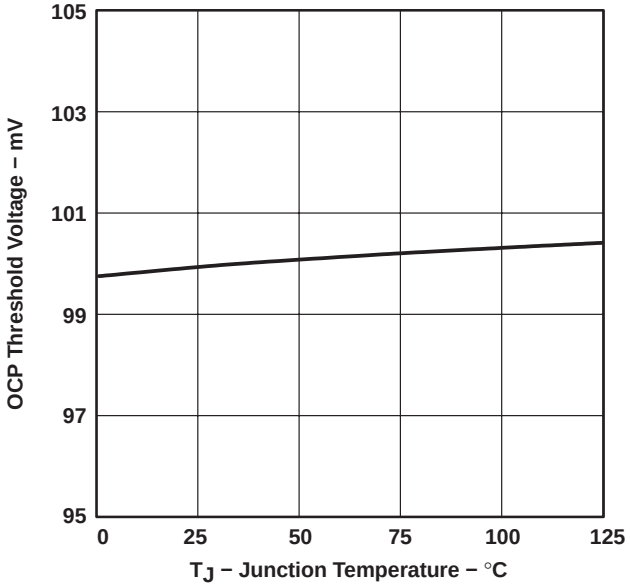

Figure 6

INHIBIT START THRESHOLD VOLTAGE vs JUNCTION TEMPERATURE

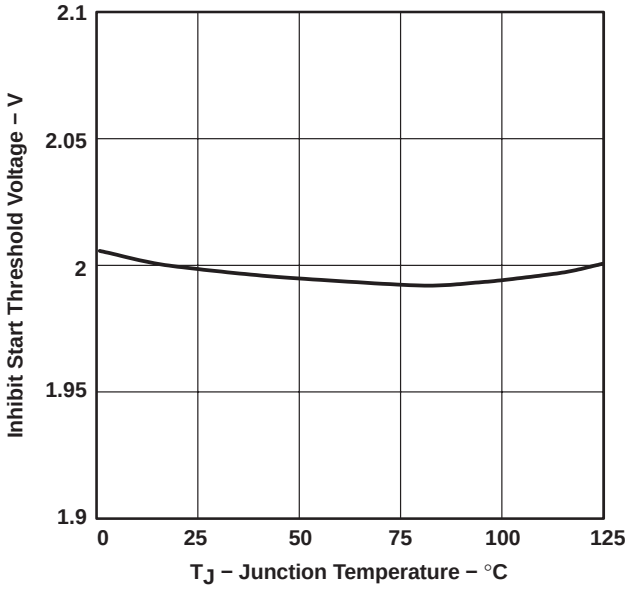

Figure 7

INHIBIT HYSTERESIS VOLTAGE vs JUNCTION TEMPERATURE

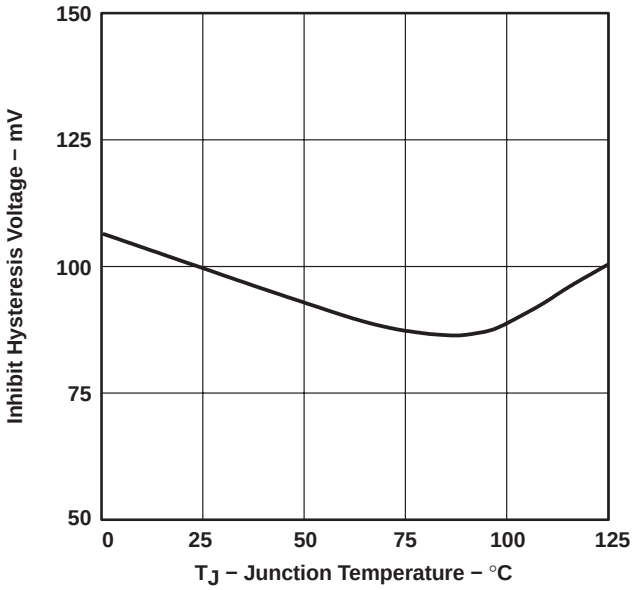

Figure 8

TYPICAL CHARACTERISTICS

UVLO START THRESHOLD VOLTAGE vs JUNCTION TEMPERATURE

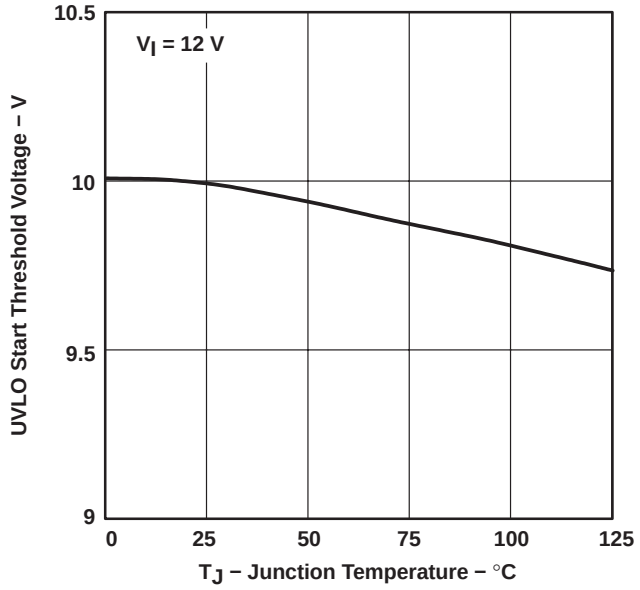

Figure 9

UVLO HYSTERESIS vs JUNCTION TEMPERATURE

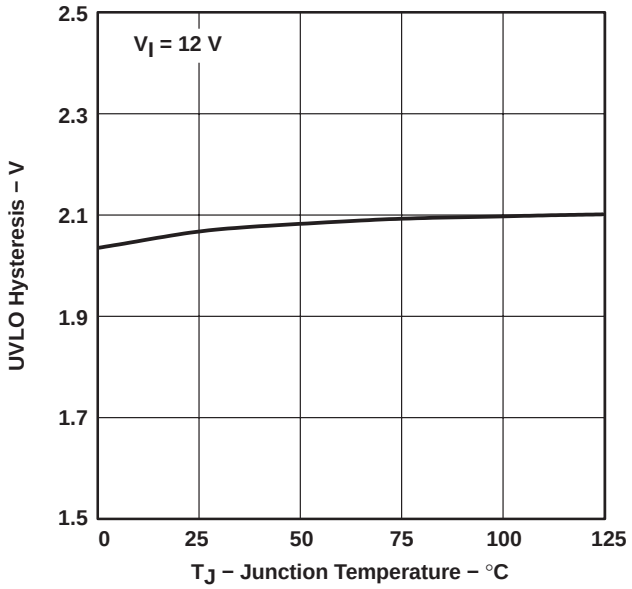

Figure 10

QUIESCENT CURRENT vs JUNCTION TEMPERATURE

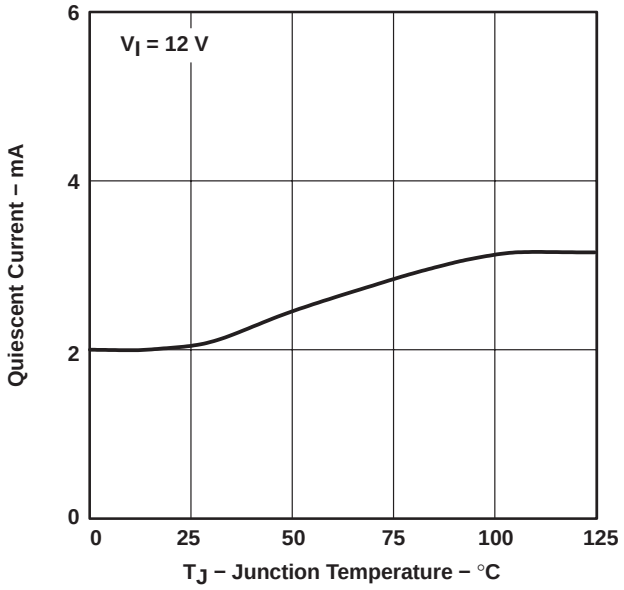

Figure 11

POWERGOOD THRESHOLD vs JUNCTION TEMPERATURE

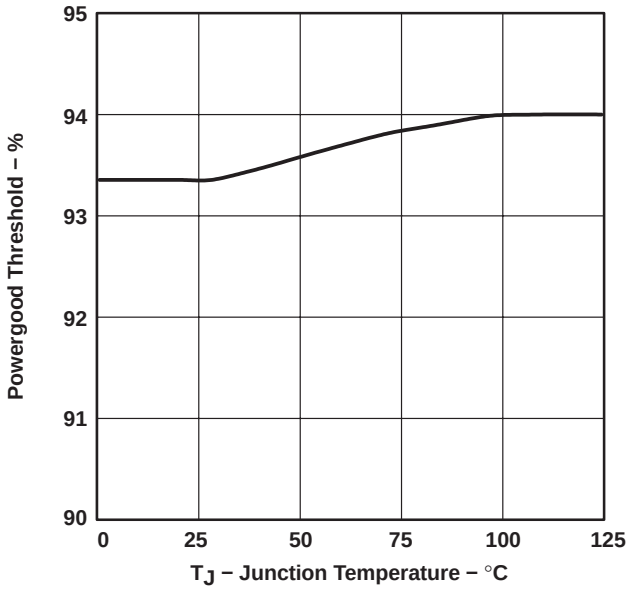

Figure 12

TYPICAL CHARACTERISTICS

SLOW START CHARGE CURRENT vs JUNCTION TEMPERATURE

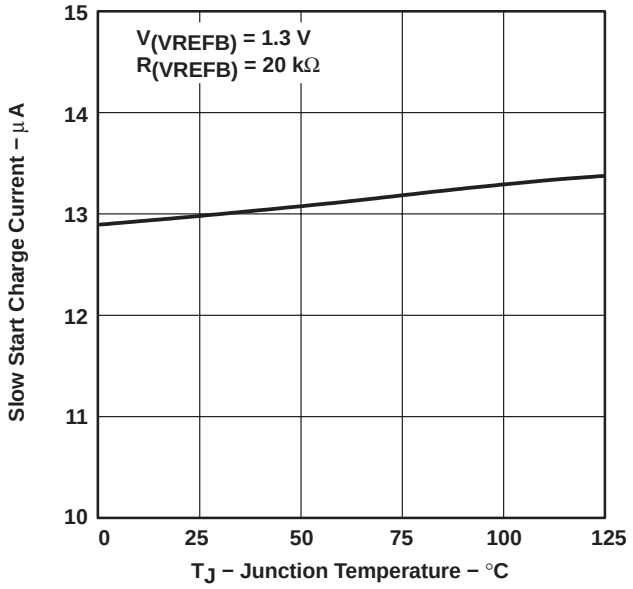

Figure 13

DRIVER REGULATOR VOLTAGE vs JUNCTION TEMPERATURE

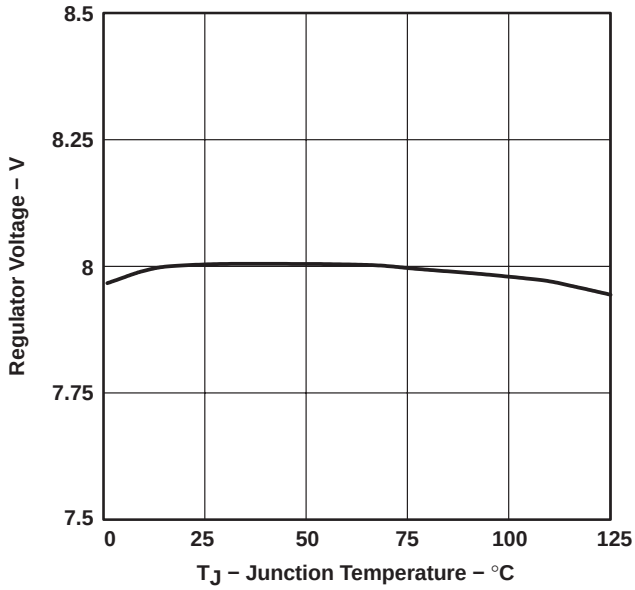

Figure 14

DRIVER HIGH-SIDE OUTPUT RESISTANCE vs JUNCTION TEMPERATURE

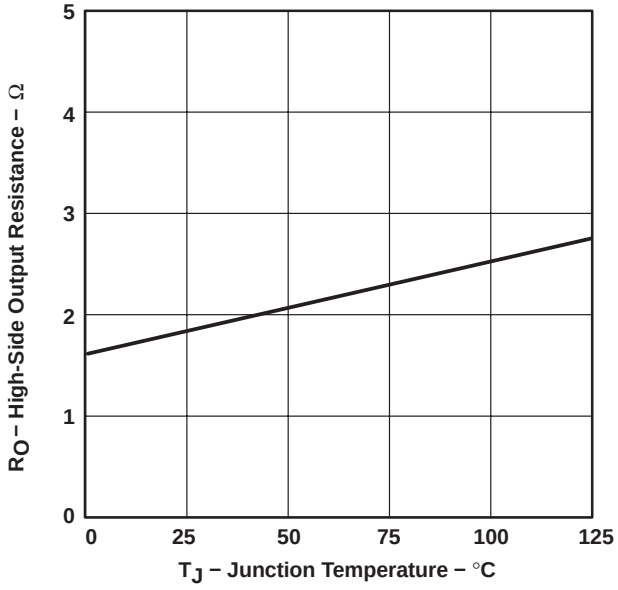

Figure 15

DRIVER LOW-SIDE OUTPUT RESISTANCE vs JUNCTION TEMPERATURE

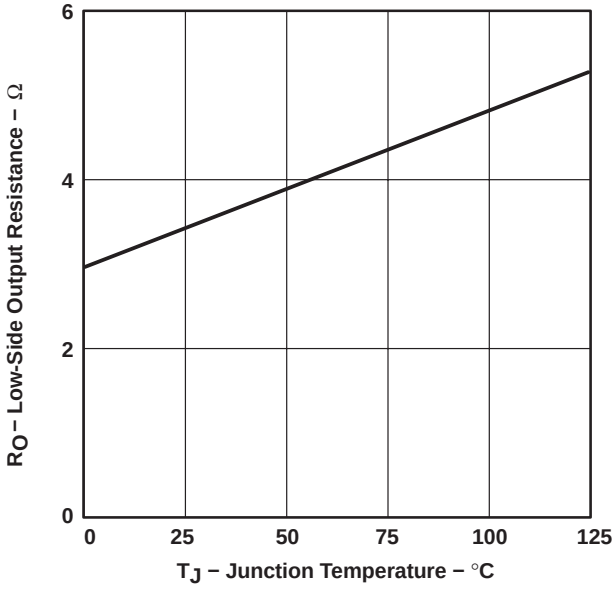

Figure 16

TYPICAL CHARACTERISTICS

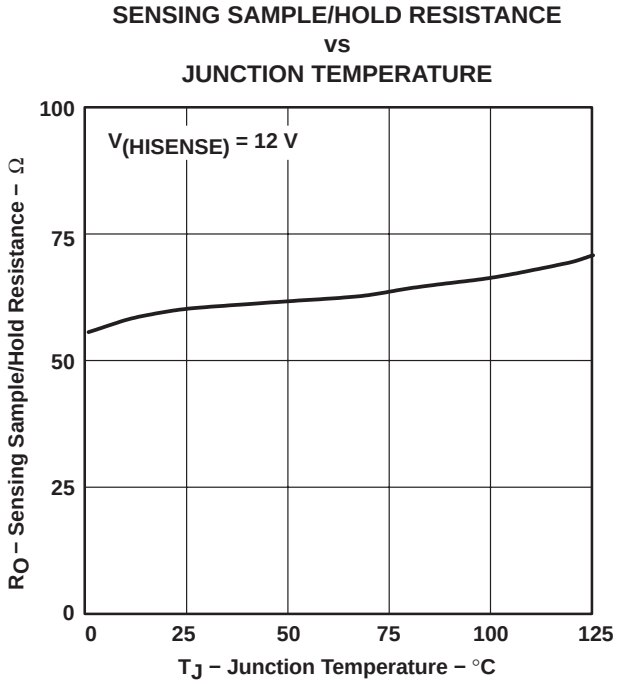

Figure 17

APPLICATION INFORMATION

The following figure is a typical application schematic. The circuit can be divided into the power-stage section and the control-circuit section. The power stage must be tailored to the input/output requirements of the application. The control circuit is basically the same for all applications with some minor tweaking of specific values. Table 2 shows the values of the power stage components for various output-current options.

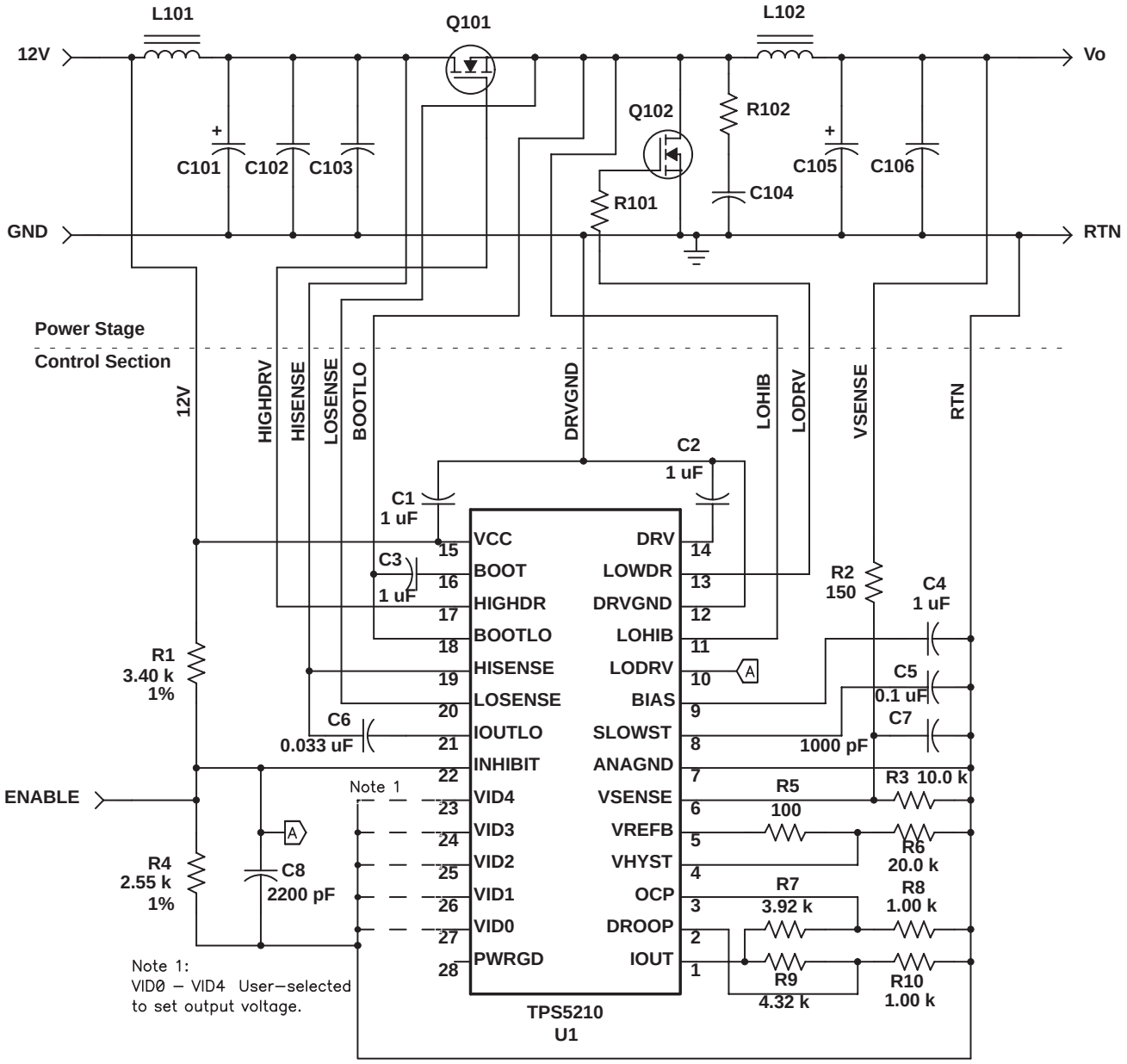

Figure 18. Standard Application Schematic

APPLICATION INFORMATION

Table 2. Power Stage Components

Ref Des	Function	12-V−Input Power Stage Components				
		4−A Out	8−A Out	12−A Out	20−A Out	40−A Out
C101	Input Bulk Capacitor	Sanyo, 16SV100M, 100−uF, 16−V, 20%	Sanyo, 16SA470M, 2 x 470−uF, 16−V, 20%	Sanyo, 16SA470M, 2 x 470−uF, 16−V, 20%	Sanyo, 16SA470M, 3 x 470−uF, 16−V, 20%	Sanyo, 16SA470M, 4 x 470−uF, 16−V, 20%
C102	Input Mid−Freq Capacitor	muRata, GRM42−6Y5V105Z025A 1.0−uF, 25−V, +80%−20%, Y5V	muRata, GRM42−6Y5V225Z016A 2.2−uF, 16−V, +80%−20%, Y5V	muRata, GRM42−6Y5V225Z016A 2.2−uF, 16−V, +80%−20%, Y5V	muRata, GRM42−6Y5V105Z025A 3 x 1.0−uF, 25−V, +80%−20%, Y5V	muRata, GRM42−6Y5V105Z025A 4 x 1.0−uF, 25−V, +80%−20%, Y5V
C103	Input Hi−Freq Bypass Capacitor	muRata, GRM39X7R104K016A 0.1−uF, 16−V, X7R	muRata, GRM39X7R104K016A, 0.1−uF, 16−V, X7R	muRata, GRM39X7R104K016A, 2 x 0.1−uF, 16−V, X7R	muRata, GRM39X7R104K016A, 3 x 0.1−uF, 16−V, X7R	muRata, GRM39X7R104K016A, 4 x 0.1−uF, 16−V, X7R
C104	Snubber Capacitor	muRata, GRM39X7R102K050A, 1000−pF, 50−V, X7R	muRata, GRM39X7R102K050A, 1000−pF, 50−V, X7R	muRata, GRM39X7R102K050A, 2 x 1000−pF, 50−V, X7R	muRata, GRM39X7R102K050A, 3 x 1000−pF, 50−V, X7R	muRata, GRM39X7R102K050A, 4 x 1000−pF, 50−V, X7R
C105	Output Bulk Capacitor	Sanyo, 6TPB150M, 3 x 150−uF, 6.3−V, 20%	Sanyo, 4SP820M, 820−uF, 4−V, 20%	Sanyo, 4SP820M, 2 x 820−uF, 4−V, 20%	Sanyo, 4SP820M, 3 x 820−uF, 4−V, 20%	Sanyo, 4SP820M, 4 x 820−uF, 4−V, 20%
C106	Output Hi−Freq Bypass Capacitor	muRata, GRM39X7R104K016A, 0.1−uF, 16−V, X7R	muRata, GRM39X7R104K016A, 0.1−uF, 16−V, X7R	muRata, GRM39X7R104K016A, 2 x 0.1−uF, 16−V, X7R	muRata, GRM39X7R104K016A, 3 x 0.1−uF, 16−V, X7R	muRata, GRM39X7R104K016A, 4 x 0.1−uF, 16−V, X7R
L101	Input Filter Inductor	CoilCraft, DO1608C−332, 3.3−uH, 2.0−A	Coiltronics, UP2B−2R2, 2.2−uH, 7.2−A	Coiltronics, UP2B−2R2, 2.2−uH, 7.2−A	Coiltronics, UP3B−1R0, 1−uH, 12.5−A	Coiltronics, UP3B−1R0, 1−uH, 12.5−A
L102	Output Filter Inductor	CoilCraft, DO3316P−332, 3.3−uH, 6.1−A	Coiltronics, UP3B−2R2, 2.2−uH, 9.2−A	Coiltronics, UP4B−1R5, 1.5−uH, 13.4−A	MicroMetals, T68−8/90 Core w/7T #16, 1.0−uH, 25−A	Pulse Engineering, P1605, 1.0−uH, 50−A
R101	Lo−Side Gate Resistor	3.3−Ohm, 1/16−W, 5%	3.3−Ohm, 1/16−W, 5%	2 x 3.3−Ohm, 1/16−W, 5%	3 x 3.3−Ohm, 1/16−W, 5%	4 x 3.3−Ohm, 1/16−W, 5%
R102	Snubber Resistor	2.7−Ohm, 1/10−W, 5%	2.7−Ohm, 1/10−W, 5%	2 x 2.7−Ohm, 1/10−W, 5%	3 x 2.7−Ohm, 1/10−W, 5%	4 x 2.7−Ohm, 1/10−W, 5%
Q101	Power Switch	Siliconix, Si4410, NMOS, 13−mOhm	Siliconix, Si4410, NMOS, 13−mOhm	Siliconix, 2 x Si4410, NMOS, 13−mOhm	Siliconix, 2 x Si4410, NMOS, 13−mOhm	IR, 2 x IRF7811, NMOS, 11−mOhm
Q102	Synchron-ous Switch	Siliconix, Si4410, NMOS, 13−mOhm	Siliconix, Si4410, NMOS, 13−mOhm	Siliconix, 2 x Si4410, NMOS, 13−mOhm	Siliconix, 3 x Si4410, NMOS, 13−mOhm	IR, 4 x IRF7811, NMOS, 11−mOhm
Nominal Frequency†		220 KHz	330 KHz	240 KHz	140 KHz	168 KHz
Hysteresis Window		20 mV	20 mV	20 mV	20 mV	10 mV

† Nominal frequency measured with Vo set to 2 V.

The values listed above are recommendations based on actual test circuits. Many variations of the above are possible based upon the desires and/or requirements of the user. Performance of the circuit is equally, if not more, dependent upon the layout than on the specific components, as long as the device parameters are not exceeded. Fast-response, low-noise circuits require critical attention to the layout details. Even though the operating frequencies of typical power supplies are relatively low compared to today's microprocessor circuits, the power levels and edge rates can cause severe problems both in the supply and the load. The power stage, having the highest current levels and greatest dv/dt rates, should be given the greatest attention.

APPLICATION INFORMATION

frequency calculation

A detailed derivation of frequency calculation is shown in the application report, "*Designing Fast Response Synchronous Buck Regulators Using the TPS5210*", TI Literature number SLVA044. When less accurate results are acceptable, the simplified equation shown below can be used:

$$f_s \cong \frac{\left(V_O \times \left[V_I - V_O\right] \times ESR\right)}{\left(V_I \times L \times \text{Hysteresis Window}\right)}$$

Control Section

Below are the equations needed to select the various components within the control section. Details and the derivations of the equations used in this section are available in the application report "*Designing Fast Response Synchronous Buck Regulators Using the TPS5210*", TI Literature number SLVA044.

output voltage selection

Of course the most important function of the power supply is to regulate the output voltage to a specific value. Values between 1.3 V and 3.5 V can be easily set by shorting the correct VID inputs to ground. Values above the maximum reference voltage (3.5 V) can be set by setting the reference voltage to any convenient voltage within its range and selecting values for R2 and R3 to give the correct output. Select R3:

R3 << than $V_{REF}/I_{BIAS(VSENSE)}$; a recommended value is 10 kΩ

Then, calculate R2 using:

$$V_O = V_{REF}\left(1 + \frac{R2}{R3}\right) \quad \text{or} \quad R2 = \frac{R3 \times \left(V_O - V_{REF}\right)}{V_{REF}}$$

R2 and R3 can also be used to make small adjusts to the output voltage within the reference-voltage range and/or to adjust for load-current active droop compensation. If there is no need to adjust the output voltage, R3 can be eliminated. R2, R3 (if used), and C7 are used as a noise filter; calculate using:

$$C7 = \frac{150\ \text{ns}}{\left(R2 \parallel R3\right)}$$

slowstart timing

Slowstart reduces the startup stresses on the power-stage components and reduces the input current surge. Slowstart timing is a function of the reference-voltage current (determined by R6) and is independent of the reference voltage. The first step in setting slowstart timing will be to determine R6:

R6 should be between 7 kΩ and 300 kΩ, a recommended value is 20 kΩ.

Set the slowstart timing using the formula:

$$C5 = \frac{t_{SS}}{\left(5 \times R_{VREFB}\right)} \cong \frac{t_{SS}}{(5 \times R6)}$$

Where C5 = Slowstart capacitance in µF
t_{SS} = Slowstart timing in µs
R_{VREFB} = Resistance from VREFB to GND in ohms (≈ R6)

APPLICATION INFORMATION

hysteresis voltage

A hysteretic controller regulates by self-oscillation, thus requiring a small ripple voltage on the output which the input comparator uses for sensing. Once selected, the TPS5210 hysteresis is proportional to the reference voltage; programming Vref to a new value automatically adjusts the hysteresis to be the same percentage of Vref. The actual output ripple voltage is the combination of the hysteresis voltage, overshoot caused by internal delays, and the output capacitor characteristics. Figure 20 shows the hysteresis window voltage (V_{HI} to V_{LO}) and the output voltage ripple (V_{MAX} to V_{MIN}). Since the output current from VREFB should be less than 500 µA, the total divider resistance (R5 + R6) should be greater than 7 KΩ. The hysteresis voltage should be no greater than 60 mV so R6 will dominate the divider.

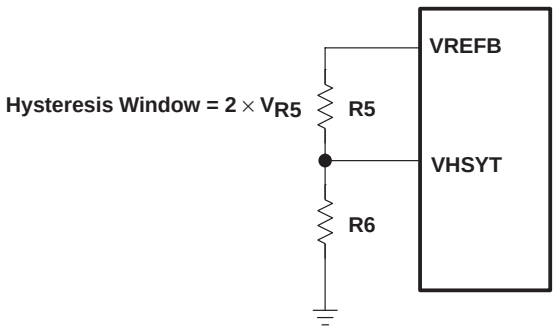

Figure 19. Hysteresis Divider Circuit

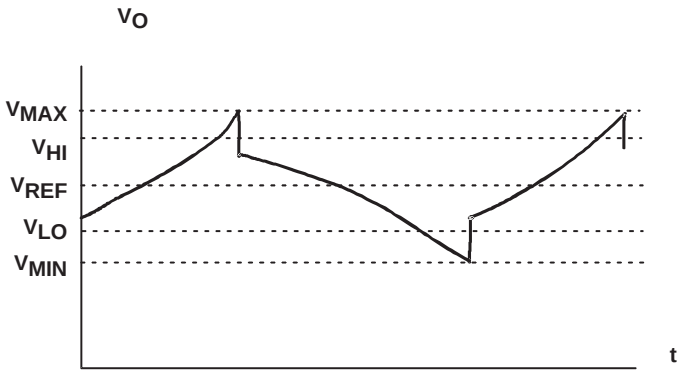

Figure 20. Output Ripple

The upper divider resistor, R5, is calculated using:

$$R5 = \frac{Hysteresis\ Window}{(2 \times VREFB - Hysteresis\ Window)} \times R6 \cong \frac{V_{HYST}\ (\%)}{(2 \times 100)} \times R6$$

Where Hysteresis Window = the desired peak-to-peak hysteresis voltage.
VREFB = selected reference voltage.
V_{HYST} (%) = [(Hysteresis Window)/VREFB] * 100 < $V_{O(Ripple)(P-P)}$ (%)

APPLICATION INFORMATION

current limit

Current limit can be implemented using the on-resistance of the upper FETs as the sensing elements. Select R8:

$$R8 << \frac{V_{OCP}}{I_{Bias(OCP)}} \leq \frac{0.1V}{(100 \times 100\,nA)} \leq 10\ \text{k}\Omega$$ (A recommended value is 1 kΩ)

The IOUT signal is used to drive the current limit and droop-circuit dividers. The voltage at IOUT at the output current trip point will be:

$$V_{IOUT(Trip)} = \frac{(2 \times R_{DS(ON)} \times TF)}{NumFETs} \times I_{O(Trip)}$$

Where NumFETS = Number of upper FETS in Parallel.
TF = $R_{DS(ON)}$ temperature correction factor.
$I_{O(Trip)}$ = Desired output current trip level (A).

Calculate R7 using:

$$R7 = \left(\frac{V_{IOUT(Trip)}}{0.1\ V} - 1\right) \times R8$$

Note that since $R_{DS(ON)}$ of MOSFETs can vary from lot to lot and with temperature, tight current-limit control (less than 1.5 x I_O) using this method is not practical. If tight control is required, an external current-sense resistor in series with the drain of the upper FET can be used with HISENSE and LOSENSE connected across the resistor.

droop compensation

Droop compensation is used to reduce the output voltage range during load transients by increasing the output voltage setpoint toward the upper tolerance limit during light loads and decreasing the voltage setpoint toward the lower tolerance limit during heavy loads. This allows the output voltage to swing a greater amount and still remain within the tolerance window. The maximum droop voltage is set with R9 and R10. Select R10:

$$R10 << \frac{V_{DROOP(Min)}}{I_{Bias(DROOP,Max)}} \leq \frac{0.01V}{(100 \times 100\,nA)} \leq 1\ \text{k}\Omega$$ (Again, a value of 1 kΩ is recommended)

The voltage at IOUT during normal operation (0 to 100% load) will vary from 0 V up to:

$$V_{IOUT(Max)} = \frac{(2 \times R_{DS(ON)} \times TF)}{NumFETs} \times I_{O(Max)}$$

Where $I_{O(Max)}$ = Maximum output load current (A).

APPLICATION INFORMATION

droop compensation (continued)

Then, calculate R9:

$$R9 = \left(\frac{V_{IOUT(Max)}}{V_{DROOP}} - 1\right) \times R10$$

Where V_{DROOP} = Desired droop voltage

At full load, the output voltage will be:

$$V_O = V_{REF} \times \left(1 + \frac{R2}{R3}\right) - V_{DROOP}$$

using the TPS5210 when both 12 V and 5 V are available

When both 12 V and 5 V are available, several components can be removed from the basic schematic shown above. R1, R4, and C9 are no longer required if 5 V is brought in directly to INHIBIT and LODRV. However, if undervoltage lockout for the 5-V input is desired, R1 and R4 can be used to set the startup setpoint. The INHIBIT pin trip level is 2.1 V. Select R4:

$$R4 << \frac{V_{INH}}{I_{INH(Max)}} \le \frac{2.1V}{(100 \times 100\,nA)} \le 210\,k\Omega$$

Then, set the 5-V UVLO trip level with R1:

$$R1 = \frac{(5V_{Trip} - 2V)}{2V} \times R4$$

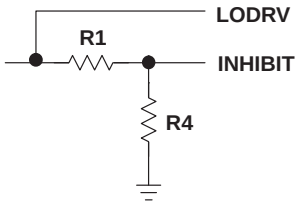

Figure 21. 5-V Input with UVLO

using the TPS5210 when only 5 V is available

The TPS5210 controller requires 12 V for internal control of the device. If an external source for 12 V is not available, a small on-board source must be included in the design. Total 12-V current is very small, typically about 20 mA, so even a small charge pump can be used to generate the supply voltage. The power stage is not voltage dependent, but component values must be selected for 5-V inputs and the frequency of operation is dependent upon the power stage input voltage.

APPLICATION INFORMATION

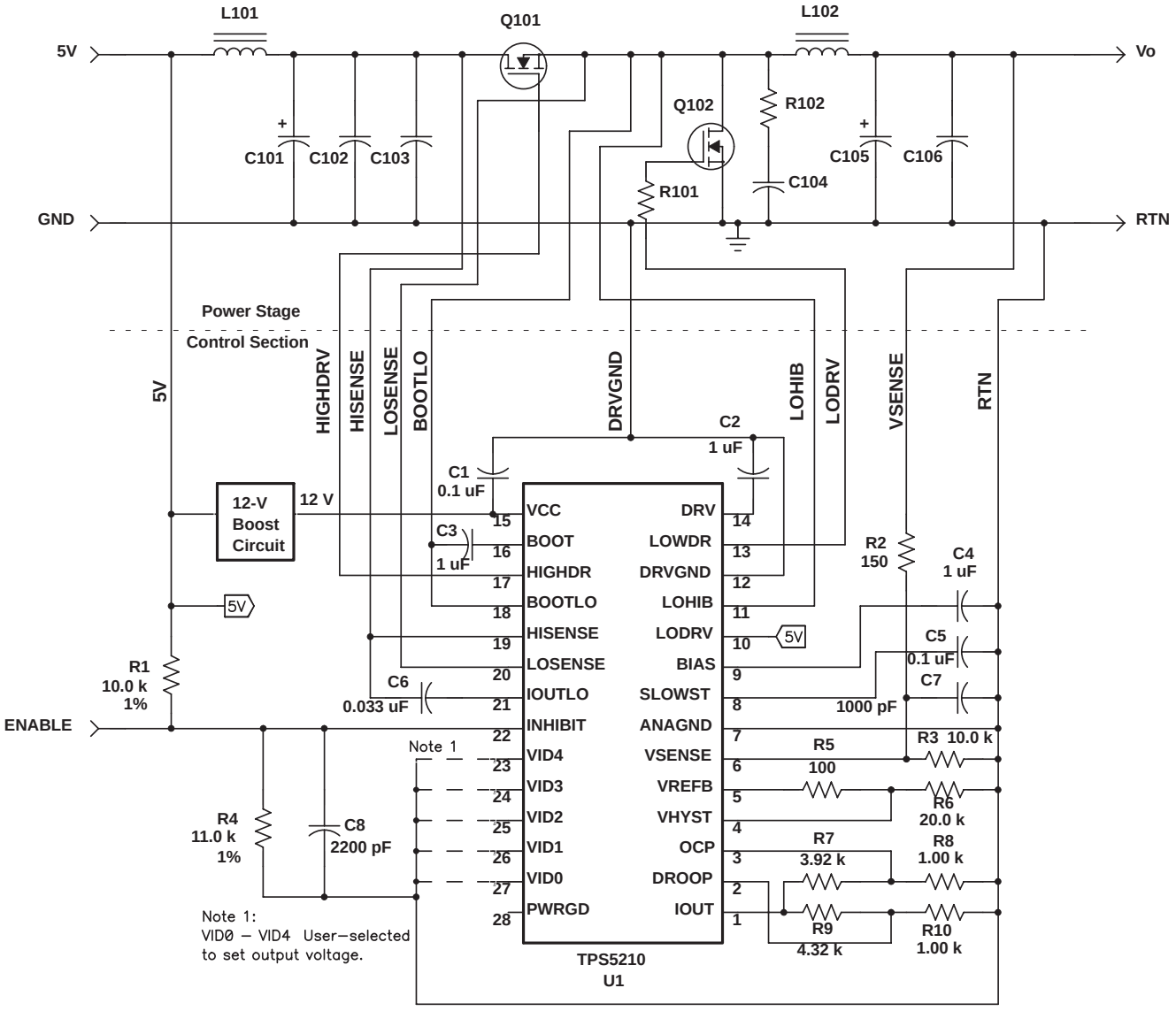

Figure 22. Typical 5-V-Only Application Circuit

application examples

Various application and layout examples using the TPS5210 are available from Texas Instruments. This information can be downloaded from *http://www.ti.com/sc/docs/products/msp/pwrsply/default.htm* or received from your TI representative.

APPLICATION INFORMATION

layout guidelines

Good power supply results will only occur when care is given to proper design and layout. Layout will affect noise pickup and generation and can cause a good design to perform with less than expected results. With a range of currents from milliamps to tens or even hundreds of amps, good power supply layout is much more difficult than most general PCB design. The general design should proceed from the switching node to the output, then back to the driver section, and, finally, place the low-level components. Below are several specific points to consider *before* layout of a TPS5210 design begins.

1. All sensitive analog components should be referenced to ANAGND. These include components connected to SLOWST, DROOP, IOUT, OCP, VSENSE, VREFB, VHYST, BIAS, and LOHIB.
2. Analog ground and drive ground should be isolated as much as possible. Ideally, analog ground will connect to the ground side of the bulk storage capacitors on V_O, and drive ground will connect to the main ground plane close to the source of the low-side FET.
3. Connections from the drivers to the gate of the power FETs, should be as short and wide as possible to reduce stray inductance. This becomes more critical if external gate resistors are not being used.
4. The bypass capacitor for the DRV regulator should be placed close to the TPS5210 and be connected to DRVGND.
5. The bypass capacitor for V_{CC} should be placed close to the TPS5210 and be connected to DRVGND.
6. When configuring the high-side driver as a floating driver, the connection from BOOTLO to the power FETs should be as short and as wide as possible. The other pins that also connect to the power FETs, LOHIB and LOSENSE, should have a separate connection to the FETS since BOOTLO will have large peak currents flowing through it.
7. When configuring the high-side driver as a floating driver, the bootstrap capacitor (connected from BOOT to BOOTLO) should be placed close to the TPS5210.
8. When configuring the high-side driver as a ground-referenced driver, BOOTLO should be connected to DRVGND.
9. The bulk storage capacitors across V_I should be placed close to the power FETS. High-frequency bypass capacitors should be placed in parallel with the bulk capacitors and connected close to the drain of the high-side FET and to the source of the low-side FET.
10. High-frequency bypass capacitors should be placed across the bulk storage capacitors on V_O.
11. HISENSE and LOSENSE should be connected very close to the drain and source, respectively, of the high-side FET. HISENSE and LOSENSE should be routed very close to each other to minimize differential-mode noise coupling to these traces. Ceramic decoupling capacitors should be placed close to where HISENSE connects to Vin, to reduce high-frequency noise coupling on HISENSE.

PACKAGING INFORMATION

Orderable part number	Status (1)	Material type (2)	Package | Pins	Package qty | Carrier	RoHS (3)	Lead finish/ Ball material (4)	MSL rating/ Peak reflow (5)	Op temp (°C)	Part marking (6)
TPS5210PWPR	Active	Production	HTSSOP (PWP) | 28	2000 | LARGE T&R	Yes	NIPDAU	Level-2-260C-1 YEAR	0 to 0	TPS5210
TPS5210PWPR.A	Active	Production	HTSSOP (PWP) | 28	2000 | LARGE T&R	Yes	NIPDAU	Level-2-260C-1 YEAR	0 to 0	TPS5210

(1) **Status:** For more details on status, see our product life cycle.

(2) **Material type:** When designated, preproduction parts are prototypes/experimental devices, and are not yet approved or released for full production. Testing and final process, including without limitation quality assurance, reliability performance testing, and/or process qualification, may not yet be complete, and this item is subject to further changes or possible discontinuation. If available for ordering, purchases will be subject to an additional waiver at checkout, and are intended for early internal evaluation purposes only. These items are sold without warranties of any kind.

(3) **RoHS values:** Yes, No, RoHS Exempt. See the TI RoHS Statement for additional information and value definition.

(4) **Lead finish/Ball material:** Parts may have multiple material finish options. Finish options are separated by a vertical ruled line. Lead finish/Ball material values may wrap to two lines if the finish value exceeds the maximum column width.

(5) **MSL rating/Peak reflow:** The moisture sensitivity level ratings and peak solder (reflow) temperatures. In the event that a part has multiple moisture sensitivity ratings, only the lowest level per JEDEC standards is shown. Refer to the shipping label for the actual reflow temperature that will be used to mount the part to the printed circuit board.

(6) **Part marking:** There may be an additional marking, which relates to the logo, the lot trace code information, or the environmental category of the part.

Multiple part markings will be inside parentheses. Only one part marking contained in parentheses and separated by a "~" will appear on a part. If a line is indented then it is a continuation of the previous line and the two combined represent the entire part marking for that device.

Important Information and Disclaimer: The information provided on this page represents TI's knowledge and belief as of the date that it is provided. TI bases its knowledge and belief on information provided by third parties, and makes no representation or warranty as to the accuracy of such information. Efforts are underway to better integrate information from third parties. TI has taken and continues to take reasonable steps to provide representative and accurate information but may not have conducted destructive testing or chemical analysis on incoming materials and chemicals. TI and TI suppliers consider certain information to be proprietary, and thus CAS numbers and other limited information may not be available for release.

In no event shall TI's liability arising out of such information exceed the total purchase price of the TI part(s) at issue in this document sold by TI to Customer on an annual basis.

TAPE AND REEL INFORMATION

REEL DIMENSIONS

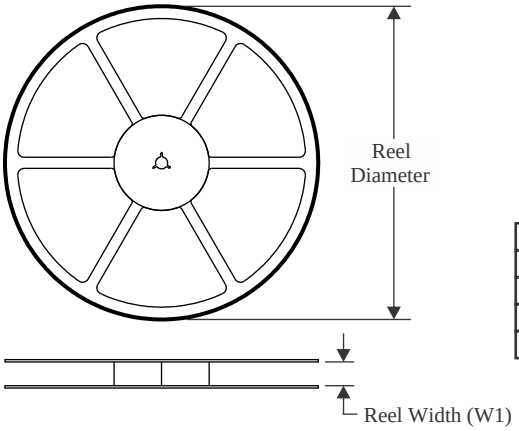

TAPE DIMENSIONS

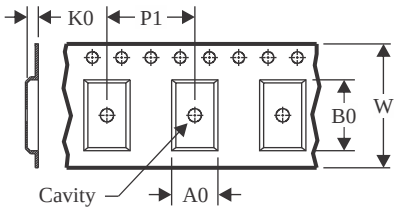

A0	Dimension designed to accommodate the component width
B0	Dimension designed to accommodate the component length
K0	Dimension designed to accommodate the component thickness
W	Overall width of the carrier tape
P1	Pitch between successive cavity centers

QUADRANT ASSIGNMENTS FOR PIN 1 ORIENTATION IN TAPE

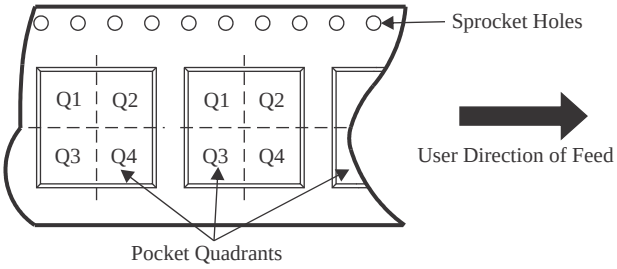

*All dimensions are nominal

Device	Package Type	Package Drawing	Pins	SPQ	Reel Diameter (mm)	Reel Width W1 (mm)	A0 (mm)	B0 (mm)	K0 (mm)	P1 (mm)	W (mm)	Pin1 Quadrant
TPS5210PWPR	HTSSOP	PWP	28	2000	330.0	16.4	6.9	10.2	1.8	12.0	16.0	Q1

TAPE AND REEL BOX DIMENSIONS

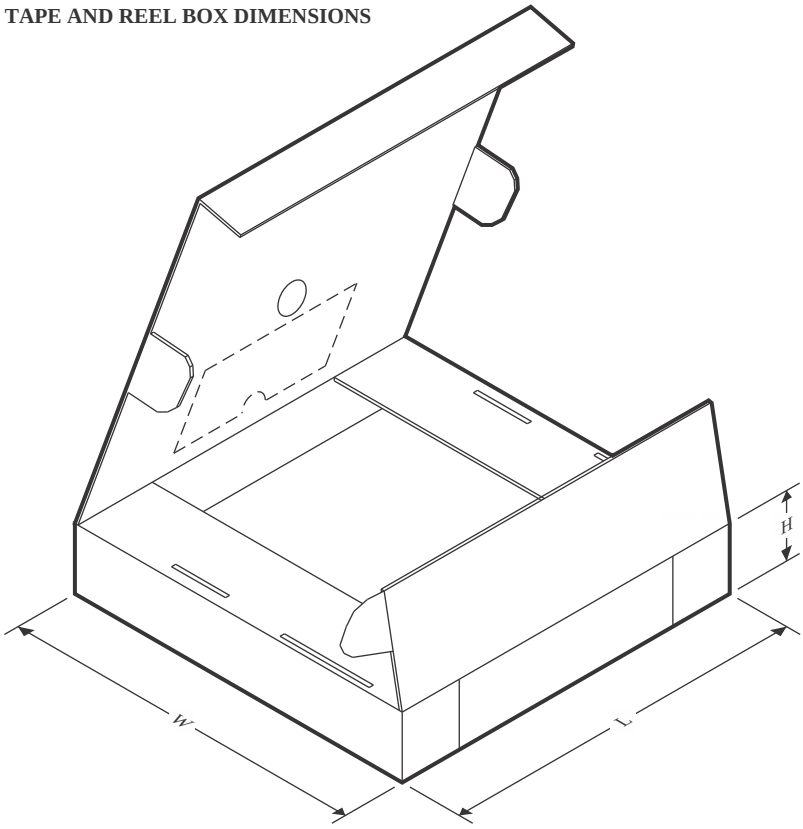

*All dimensions are nominal

Device	Package Type	Package Drawing	Pins	SPQ	Length (mm)	Width (mm)	Height (mm)
TPS5210PWPR	HTSSOP	PWP	28	2000	350.0	350.0	43.0

GENERIC PACKAGE VIEW

PWP 28

PowerPAD™ TSSOP - 1.2 mm max height

4.4 x 9.7, 0.65 mm pitch

SMALL OUTLINE PACKAGE

This image is a representation of the package family, actual package may vary.
Refer to the product data sheet for package details.

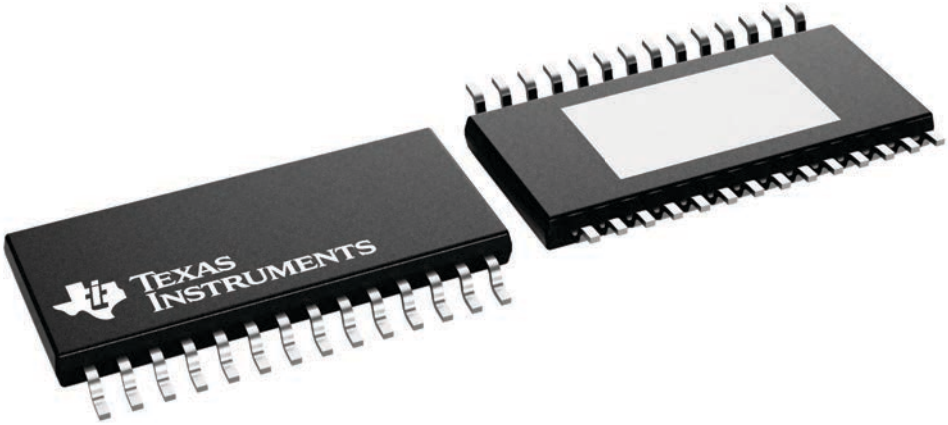

4224765/B

IMPORTANT NOTICE AND DISCLAIMER

TI PROVIDES TECHNICAL AND RELIABILITY DATA (INCLUDING DATASHEETS), DESIGN RESOURCES (INCLUDING REFERENCE DESIGNS), APPLICATION OR OTHER DESIGN ADVICE, WEB TOOLS, SAFETY INFORMATION, AND OTHER RESOURCES “AS IS” AND WITH ALL FAULTS, AND DISCLAIMS ALL WARRANTIES, EXPRESS AND IMPLIED, INCLUDING WITHOUT LIMITATION ANY IMPLIED WARRANTIES OF MERCHANTABILITY, FITNESS FOR A PARTICULAR PURPOSE OR NON-INFRINGEMENT OF THIRD PARTY INTELLECTUAL PROPERTY RIGHTS.

These resources are intended for skilled developers designing with TI products. You are solely responsible for (1) selecting the appropriate TI products for your application, (2) designing, validating and testing your application, and (3) ensuring your application meets applicable standards, and any other safety, security, regulatory or other requirements.

These resources are subject to change without notice. TI grants you permission to use these resources only for development of an application that uses the TI products described in the resource. Other reproduction and display of these resources is prohibited. No license is granted to any other TI intellectual property right or to any third party intellectual property right. TI disclaims responsibility for, and you fully indemnify TI and its representatives against any claims, damages, costs, losses, and liabilities arising out of your use of these resources.

TI’s products are provided subject to TI’s Terms of Sale, TI’s General Quality Guidelines, or other applicable terms available either on ti.com or provided in conjunction with such TI products. TI’s provision of these resources does not expand or otherwise alter TI’s applicable warranties or warranty disclaimers for TI products. Unless TI explicitly designates a product as custom or customer-specified, TI products are standard, catalog, general purpose devices.

TI objects to and rejects any additional or different terms you may propose.

Copyright © 2026, Texas Instruments Incorporated

Last updated 10/2025