TPS61042 Constant Current LED Driver

1 Features

- Current Source With Overvoltage Protection
- Input Voltage Range: 1.8 V to 6 V
- Internal 30 V Switch
- Up to 85% Efficiency
- Precise Brightness Control Using PWM Signal or Analog Signal
- Switching Frequency: Up to 1 MHz
- Internal Power MOSFET Switch: 500 mA
- Operates With Small Output Capacitors Down to 100 nF
- Disconnects LEDs During Shutdown
- No Load Quiescent Current: 38 µA Typ
- Shutdown Current: 0.1 µA Typ
- Available in a Small 3 mm × 3 mm QFN Package

2 Applications

- White LED Supply for Backlight/Sidelight Displays
  - PDA, Pocket PC, Smart Phones
  - Handheld Devices
  - Cellular Phones

3 Description

The TPS61042 is a high frequency boost converter with constant current output that drives white LEDs or similar. The LED current is set with the external sense resistor (R_S) and is directly regulated by the feedback pin (FB) that regulates the voltage across the sense resistor R_S to 252 mV (typ). To control LED brightness, the LED current can be pulsed by applying a PWM (pulse width modulated) signal with a frequency range of 100 Hz to 50 kHz to the control pin (CTRL). To allow higher flexibility, the device can be configured where the brightness can be controlled by an analog signal as well, as described in the *application information* section. To avoid possible leakage currents through the LEDs during shutdown, the control pin (CTRL) disables the device and disconnects the LEDs from ground. For maximum safety during operation, the output has integrated overvoltage protection that prevents damage to the device in case of a high impedance output (e.g. faulty LED).

Device Information[1]

PART NUMBER	PACKAGE	BODY SIZE (NOM)
TPS61042	SON (8)	3.00 mm × 3.00 mm

(1) For all available packages, see the orderable addendum at the end of the data sheet.

4 Typical Application

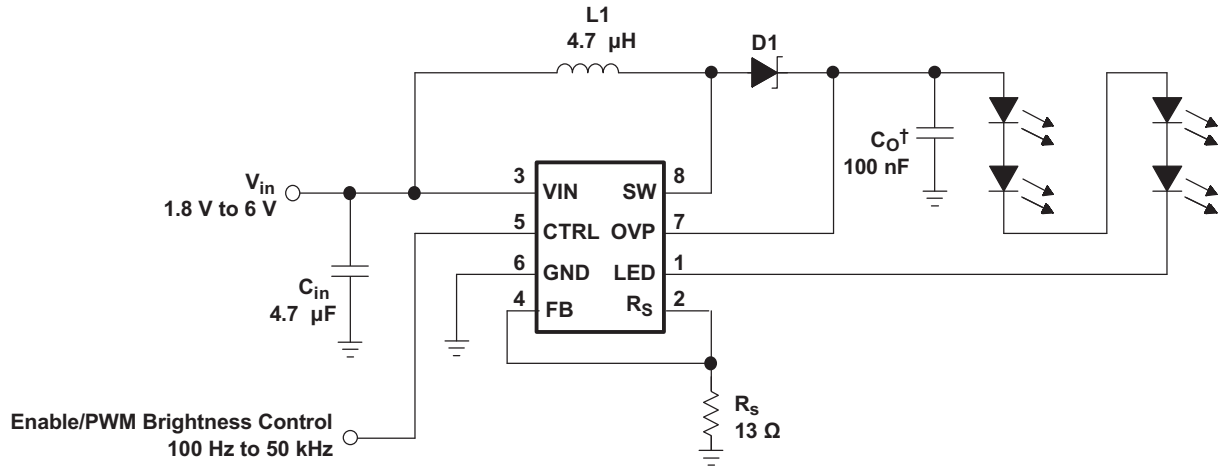

† Larger output capacitor values of 1 µF and larger, reduce the LED ripple current and improve line regulation.

An IMPORTANT NOTICE at the end of this data sheet addresses availability, warranty, changes, use in safety-critical applications, intellectual property matters and other important disclaimers. PRODUCTION DATA.

Table of Contents

1 Features ... 1
2 Applications ... 1
3 Description ... 1
4 Typical Application ... 1
5 Revision History ... 2
6 Pin Configuration and Functions ... 3
7 Specifications ... 3
7.1 Absolute Maximum Ratings ... 3
7.2 ESD Ratings ... 4
7.3 Recommended Operating Conditions ... 4
7.4 Thermal Information ... 4
7.5 Electrical Characteristics ... 5
7.6 Typical Characteristics ... 6
8 Detailed Description ... 8
8.1 Overview ... 8
8.2 Functional Block Diagram ... 8
8.3 Feature Description ... 9
8.4 Device Functional Modes ... 10
9 Application and Implementation ... 11
9.1 Application Information ... 11
9.2 Typical Application ... 16
10 Power Supply Recommendations ... 21
11 Layout ... 21
11.1 Layout Guidelines ... 21
11.2 Layout Example ... 21
12 Device and Documentation Support ... 22
12.1 Device Support ... 22
12.2 Documentation Support ... 22
12.3 Trademarks ... 22
12.4 Electrostatic Discharge Caution ... 22
12.5 Glossary ... 22
13 Mechanical, Packaging, and Orderable Information ... 22

5 Revision History

NOTE: Page numbers for previous revisions may differ from page numbers in the current version.

Changes from Revision C (March 2007) to Revision D	Page
• Added Device Information table, Feature Description section, Device Functional Modes, Application and Implementation section, Power Supply Recommendations section, Layout section, Device and Documentation Support section, and Mechanical, Packaging, and Orderable Information section	1
• Added the equation number to all the equations	9

Copyright © 2002–2014, Texas Instruments Incorporated

6 Pin Configuration and Functions

SON (DRB) Package
8 Pins
TOP VIEW

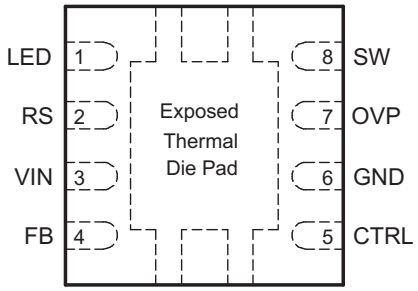

The exposed thermal die pad is connected to GND.

Pin Functions

PIN		I/O	DESCRIPTION
NAME	NO.		
CTRL	5	I	Combined enable and PWM control pin. If CTRL is constantly pulled high, the device is enabled and the internal LED switch (Q2) is constantly turned on. When CTRL is pulled to GND, the device is disabled. Apply a PWM signal (100 Hz to 50 kHz) to this pin to control the brightness of the LEDs
FB	4	I	Feedback. FB regulates the LED current through the sense resistor by regulating the voltage across R_S to 252 mV.
GND	6		GND
LED	1	I	Input of the LED switch (Q2). Connect the LEDs to this pin.
OVP	7	I	Overvoltage protection. OVP is connected to the output capacitor of the converter.
RS	2	O	Output of the internal LED switch. The sense resistor that programs the LED current is connected to RS.
SW	8	I	Drain of the integrated switch (Q1)
VIN	3	I	Input supply pin.

7 Specifications

7.1 Absolute Maximum Ratings

over operating free-air temperature range (unless otherwise noted) (1)

		MIN	MAX	UNIT
$V_{(VIN)}$	Supply voltages (2)	–0.3	7	V
$V_{(Rs)}$, $V_{(CTRL)}$, $V_{(FB)}$	Voltages	–0.3	Vin + 0.3	V
$V_{(SW)}$, $V_{(LED)}$	Voltages(2)		30	V
$V_{(OVP)}$	Voltage		30	V
Continuous power dissipation		See Thermal Information Table		
Operating junction temperature range		–40	150	°C
Storage temperature, T_{STG}		–65	150	°C

(1) Stresses beyond those listed under *Absolute Maximum Ratings* may cause permanent damage to the device. These are stress ratings only, which do not imply functional operation of the device at these or any other conditions beyond those indicated under *Recommended Operating Conditions*. Exposure to absolute-maximum-rated conditions for extended periods may affect device reliability.
(2) All voltage values are with respect to network ground terminal.

Copyright © 2002–2014, Texas Instruments Incorporated

7.2 ESD Ratings

			VALUE	UNIT
$V_{(ESD)}$	Electrostatic discharge	Human-body model (HBM), per ANSI/ESDA/JEDEC JS-001 (1)	±2000	V
		Charged-device model (CDM), per JEDEC specification JESD22-C101 (2)	±750	

(1) JEDEC document JEP155 states that 500-V HBM allows safe manufacturing with a standard ESD control process.
(2) JEDEC document JEP157 states that 250-V CDM allows safe manufacturing with a standard ESD control process.

7.3 Recommended Operating Conditions

over operating free-air temperature range (unless otherwise noted)

		MIN	TYP	MAX	UNIT
V_I	Input voltage range	1.8		6	V
V_s	Output voltage range	V_{IN}		27.5	V
V_{SW}	Switch voltage			30	V
$I_{(LED)}$	Maximum LED switch current			60	mA
L	Inductor (1)		4.7		µH
f	Switching frequency (1)			1	MHz
C_I	Input capacitor (1)		4.7		µF
C_O	Output capacitor (1)		100		nF
T_A	Operating ambient temperature	–40		85	°C
T_J	Operating junction temperature	–40		125	°C

(1) See application section for further information.

7.4 Thermal Information

THERMAL METRIC (1)		TPS61042 DRB PACKAGE 8 PINS	UNIT
$R_{\theta JA}$	Junction-to-ambient thermal resistance	48.6	°C/W
$R_{\theta JC(top)}$	Junction-to-case (top) thermal resistance	66.9	
$R_{\theta JB}$	Junction-to-board thermal resistance	23.8	
ψ_{JT}	Junction-to-top characterization parameter	1.5	
ψ_{JB}	Junction-to-board characterization parameter	23.9	
$R_{\theta JC(bot)}$	Junction-to-case (bottom) thermal resistance	5.2	

(1) For more information about traditional and new thermal metrics, see the *IC Package Thermal Metrics* application report, SPRA953.

Copyright © 2002–2014, Texas Instruments Incorporated

7.5 Electrical Characteristics

V_I = 3.6 V, CTRL= V_I, T_A = -40°C to + 85°C, typical values are at T_A= 25°C (unless otherwise noted)

PARAMETER		TEST CONDITIONS	MIN	TYP	MAX	UNIT
SUPPLY CURRENT						
V_I	Input voltage range		1.8		6.0	V
$I_{(Q)}$	Operating quiescent current into VIN	I_O = 0 mA, not switching		38	65	µA
$I_{O(sd)}$	Shutdown current	CTRL = GND		0.1	1	µA
V_{UVLO}	Under-voltage lockout threshold	V_I falling		1.5	1.7	V
CTRL						
V_{IH}	CTRL high level input voltage		1.3			V
V_{IL}	CTRL low level input voltage				0.3	V
I_{lkg}	CTRL input leakage current	CTRL = GND or VIN			0.1	µA
t_{on}	Minimum CTRL pulse width to enable	CTRL = low to high	50			µs
t_{off}	Minimum CTRL pulse width to disable	CTRL = high to low	10		32	ms
$f_{(CTRL)}$	PWM switching frequency applied to CTRL		0.1		50	kHz
$D_{(CTRL)}$	PWM duty cycle applied to CTRL		1%		100%	
POWER SWITCH AND CURRENT LIMIT (SW)						
V_S	Maximum switch voltage				30	V
$r_{ds(ON)}$	MOSFET on-resistance	V_I = 3.6 V; $I_{(SW)}$ = 200 mA		300	600	mΩ
I_{lkg}	MOSFET leakage current	$V_{(SW)}$ = 28 V		0.1	10	µA
I_{LIM}	MOFSET current limit		400	500	600	mA
LED SWITCH AND CURRENT LIMIT (LED)						
V_S	Maximum switch voltage				30	V
$r_{ds(ON)}$	MOSFET on-resistance	V_I = 3.6 V; I_S = 20 mA		1	2	Ω
I_{lkg}	MOSFET leakage current	$V_{(LED)}$= 28 V		0.1	10	µA
OUTPUT						
V_O	Output voltage range		V_I		27.5	V
$I_{(FB)}$	Feedback input bias current(1)	$V_{(FB)}$ = 0.252 V			100	nA
V_{FB}	Feedback trip point voltage	1.8 V ≤ V_I ≤ 6 V	244	252	260	mV
$V_{(OVP)}$	Output overvoltage protection	V_O rising	27.5	29	30	V
$V_{hys(OVP)}$	Output overvoltage protection hysteresis		5		7	V
$I_{(OVP)}$	OVP input current	V_O = 15 V		9	12	µA

(1) The feedback input is high impedance MOSFET Gate input.

Copyright © 2002–2014, Texas Instruments Incorporated

7.6 Typical Characteristics

Table 1. Table of Graphs

			FIGURE
η	Efficiency	vs LED current	Figure 1
		vs Input voltage	Figure 2
I_Q	Operating Quiescent Current into VIN	vs Input voltage and Temperature	Figure 3
$V_{(FB)}$	Feedback voltage	vs Temperature	Figure 4
$I_{(FB)}$	Feedback current	vs Temperature	Figure 5
$r_{ds(on)}$	Main switch Q1	vs Temperature	Figure 6
		vs Input voltage	Figure 7
	LED switch Q2	vs Temperature	Figure 8
		vs Input voltage	Figure 9
I_{LED}	Average LED current	vs PWM duty cycle on CTRL pin	Figure 10

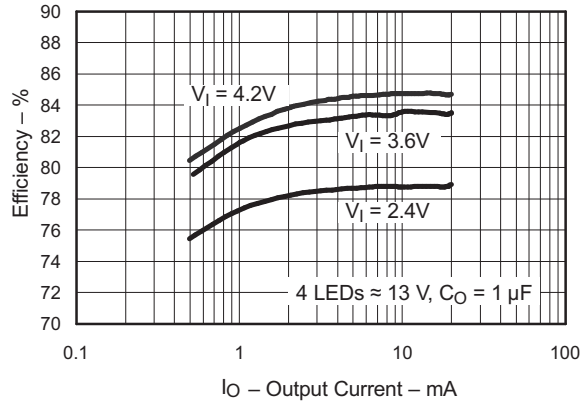

Figure 1. Efficiency vs Output Current

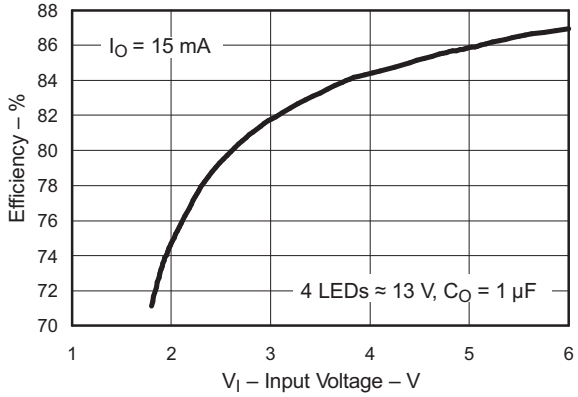

Figure 2. Efficiency vs Input Voltage

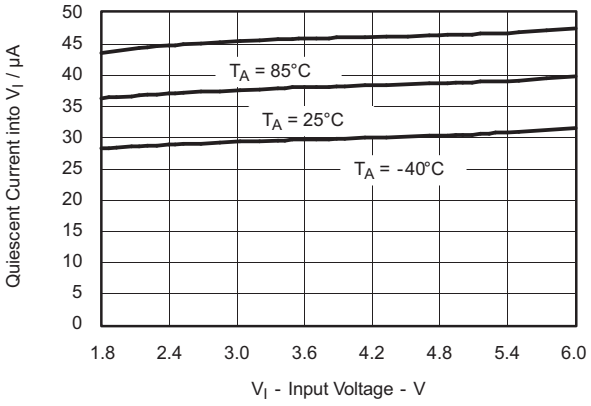

Figure 3. Operating Quiescent Current into VIN vs Input Voltage and Temperature

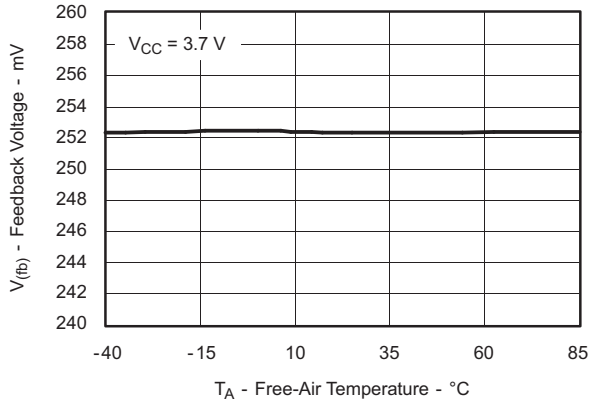

Figure 4. Feedback Voltage vs Temperature

Copyright © 2002–2014, Texas Instruments Incorporated

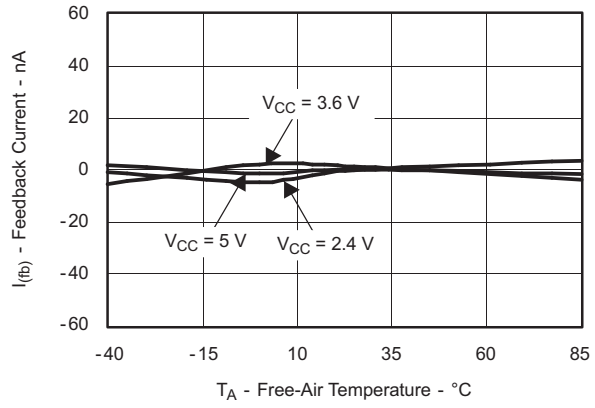

Figure 5. Feedback Current vs Temperature

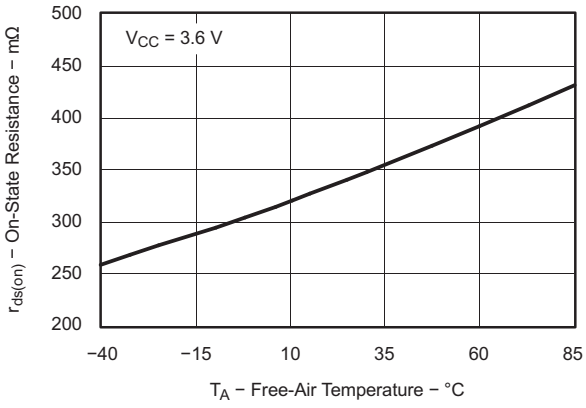

Figure 6. $r_{ds(on)}$ Main Switch (Q1) vs Temperature

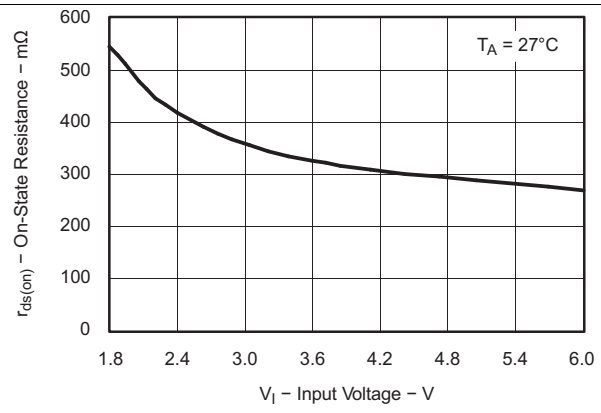

Figure 7. $r_{ds(ON)}$ Main Switch (Q1) vs Input Voltage

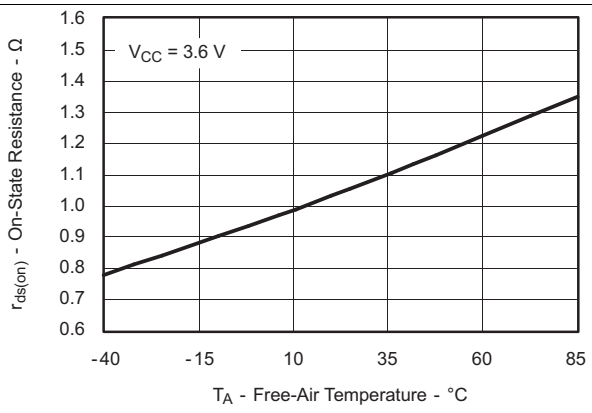

Figure 8. $r_{ds(on)}$ LED Switch (Q2) vs Temperature

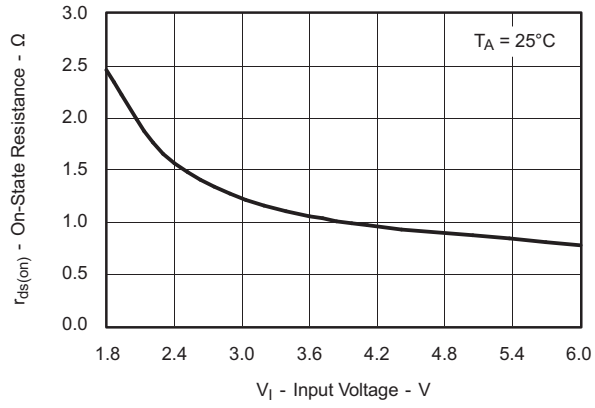

Figure 9. $r_{ds(on)}$ LED Switch (Q2) vs Input Voltage

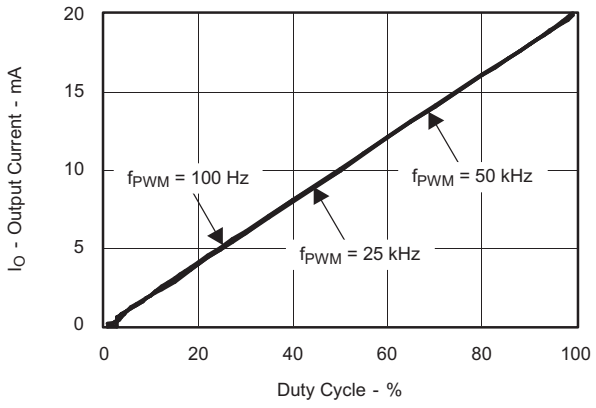

Figure 10. Average LED Current vs PWM Duty Cycle on CTRL Pin

8 Detailed Description

8.1 Overview

The TPS61042 operates like a standard boost converter but regulates the voltage across the sense resistor (RS) instead of the output voltage. This gives an accurate regulated LED current independent of the input voltage and number of LEDs connected. With integrated overvoltage protection (OVP) the TPS61042 is configured as a current source with overvoltage protection ideally suited to drive LEDs. With the 30V internal switch, the device can generate output voltages of up to 27.5 V and has an internal 500mA MOSFET switch (Q1). This allows several LEDs to be connected in series to the output. The internal LED switch (Q2) in series with the LEDs has a maximum current rating of 60 mA and disconnects the LEDs from ground during shutdown. The LED switch is driven by a PWM signal applied to the control pin (CTRL), which directly controls the LED brightness. With this control method the LED brightness depends on the PWM duty cycle only and is independent of the PWM frequency and amplitude.

8.2 Functional Block Diagram

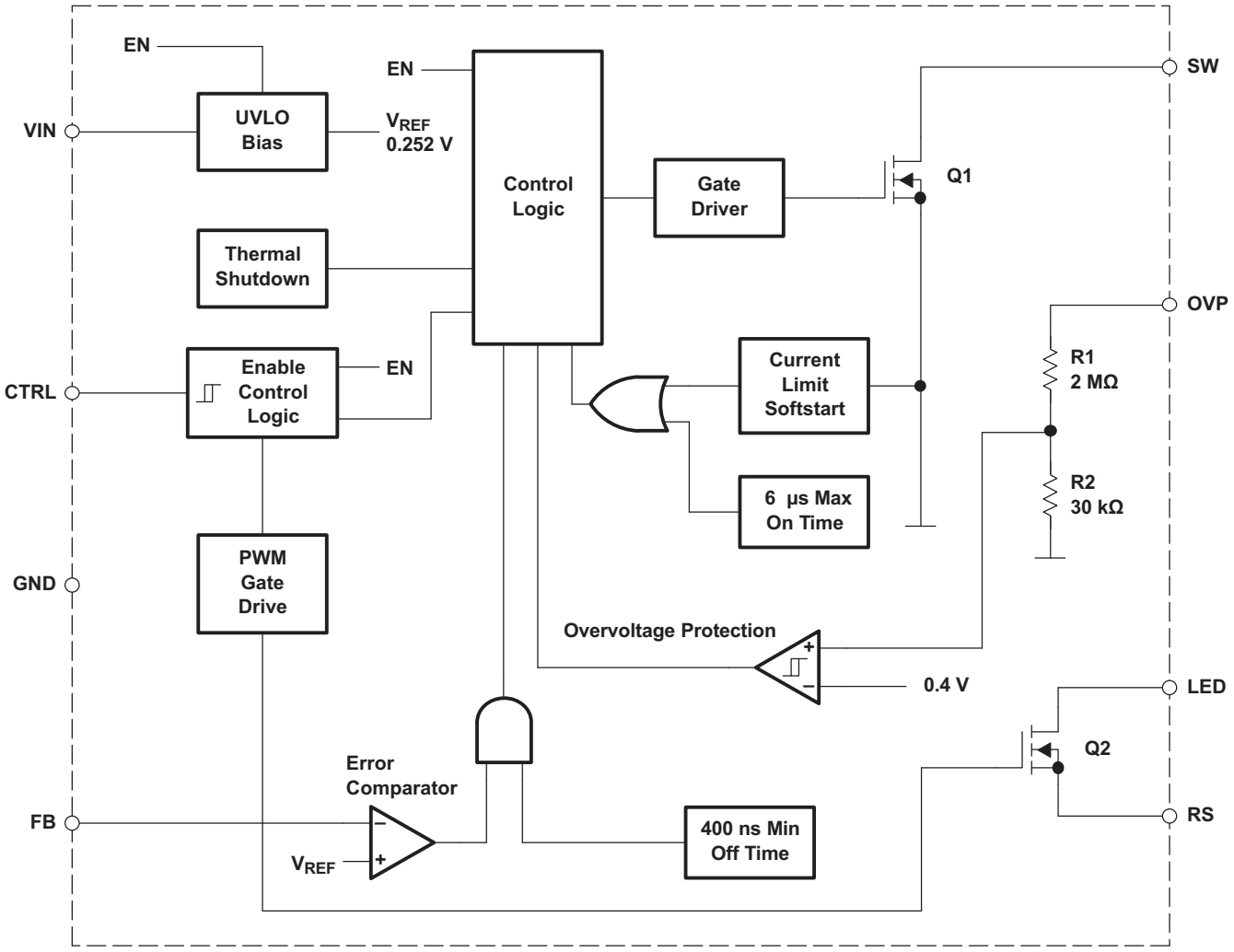

Copyright © 2002–2014, Texas Instruments Incorporated

8.3 Feature Description

8.3.1 Boost Converter

The boost converter operates in a pulse frequency modulation (PFM) scheme with constant peak current control. This control scheme maintains high efficiency over the entire load current range and with a switching frequency of up to 1 MHz, enables the use of small external components. The converter monitors the sense voltage across RS with the feedback pin (FB) and, when the feedback voltage falls below the reference voltage (252 mV typ), the main switch turns on and the current ramps up. The main switch turns off when the inductor current reaches the internally set peak current of 500 mA (typ). Refer to the peak current control section for more information. The second criteria that turns off the main switch is the maximum on-time of 6 µs (typ). This limits the maximum on-time of the converter in extreme conditions. As the switch is turned off the external Schottky diode is forward biased, delivering the stored inductor energy to the output. The main switch remains off until the minimum off time of 400 ns (typ) has passed and the feedback voltage is below the reference voltage again. Using this PFM peak current control scheme, the converter operates in discontinuous conduction mode (DCM) where the switching frequency depends on the inductor, input and output voltage, and LED current. Lower LED currents reduce the switching frequency, which results in high efficiency over the entire LED current range. This regulation scheme is inherently stable, allowing a wide range for the selection of the inductor and output capacitor.

8.3.2 Peak Current Control (Boost Converter)

The internal switch is turned on until the inductor current reaches the DC current limit (I_{LIM}) of 500 mA (typ). Due to the internal current limit delay of 100 ns (typ) the actual current exceeds the DC current limit threshold by a small amount. The typical peak current limit can be calculated:

$$I_{P(typ)} = I_{(LIM)} + \frac{V_I}{L} \times 100\ ns \quad (1)$$

$$I_{P(typ)} = 500\ mA + \frac{V_I}{L} \times 100\ ns \quad (2)$$

The higher the input voltage and the lower the inductor value, the greater the current limit overshoot.

8.3.3 Softstart

All inductive step-up converters exhibit high in-rush current during start-up if no special precautions are taken. This can cause voltage drops at the input rail during start-up, which may result in an unwanted or premature system shutdown.

The TPS61042 limits this in-rush current during start-up by increasing the current limit in two steps starting from $I_{LIM}/4$ for 256 switch cycles to $I_{LIM}/2$ for the next 256 switch cycles and then full current limit. See Figure 23 for typical start-up behavior.

8.3.4 Control (CTRL)

The CTRL pin serves two functions. One is the enable and disable of the device. The other is the PWM control of the internal LED switch (Q2). If no PWM signal is applied to the CTRL pin, then the CTRL pin can be used as a standard enable pin for the device. To enable the device, the CTRL pin must be pulled high for time period of at least 50 µs. The device starts with the Softstart cycle. Pulling the CTRL pin to GND for a time period ≥32 ms disables the device, disconnecting the LEDs from GND by opening the LED switch (Q2) to avoid any LED leakage current. See Figure 11 for the CTRL pin timing.

The internal LED switch (Q2) is driven by the PWM signal when applied to the CTRL pin. Applying a PWM signal in the range of 100 Hz to 50 kHz allows the LED current to be pulsed with the duty cycle of the PWM signal. The CTRL pin accepts a PWM duty cycle from D = 1% to 100%. Duty cycles below 1% are also possible with the restriction that the device is forced into shutdown as the off time of the applied PWM signal exceeds 10 ms.

When a PWM signal is applied to the CTRL pin the LED switch (Q2) turns on immediately. The internal error comparator is disabled for 400 ns. This 400 ns delay time is required to establish the correct voltage level across the sense resistor R_S after the LED switch (Q2) is closed.

To achieve good LED current accuracy and linearity, the switching frequency of the converter must be higher than the PWM frequency applied to the CTRL pin.

Copyright © 2002–2014, Texas Instruments Incorporated

Feature Description (continued)

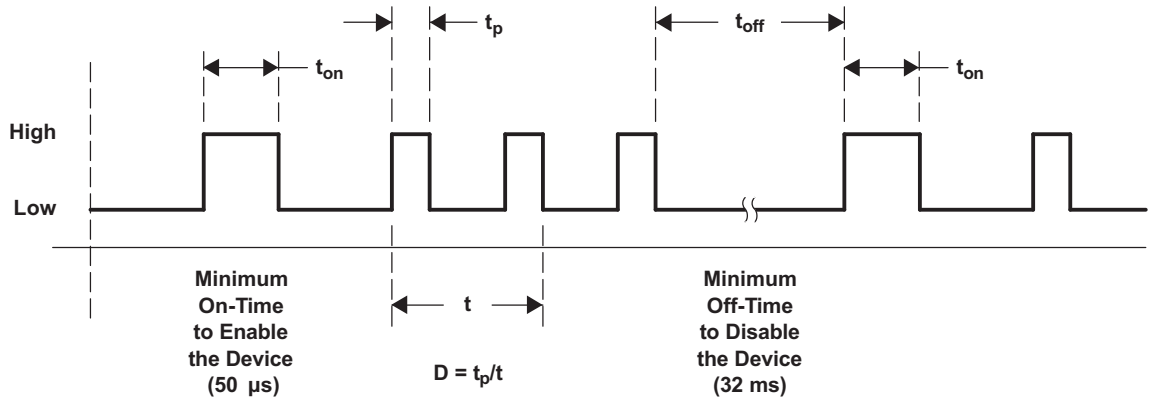

Figure 11. CTRL Timing Diagram

The CTRL timing diagram is shown in Figure 11. To enable the device, the CTRL signal must be high for 50 µs. The PWM signal can then be applied with a pulse width (t_p) greater or smaller than t_{ON}. To force the device into shutdown mode, the CTRL signal must be low for at least 32 ms. Requiring the CTRL pin to be low for 32mS before the device enters shutdown allows for PWM dimming frequencies as low as 100 Hz. The device is enabled again when a CTRL signal is high for a period of 50 µs minimum. See Figure 10 for the PWM duty cycle versus LED current characteristic.

This CTRL pin must be terminated.

8.3.5 Applying a PWM Signal to the CTRL Pin with an On-Time tp≤2.5µs

In such a case the on-time of the PWM signal, tp, must be >2.5µs until the softstart is completed. The softstart is completed after 512 switching cycles. To simply, estimate the softstart time, multiply the period of the PWM signal times 512, and add 50µs to it. For a 50-kHz signal this would be 10.3ms as a minimum softstart time period. After the softstart time is completed the PWM on time can be reduced to tp >400ns.

8.4 Device Functional Modes

8.4.1 Overvoltage Protection (OVP)

As with any current source, the output voltage rises as the output impedance increases or is disconnected. To prevent the output voltage from exceeding the maximum main switch (Q1) voltage rating of 30 V, an overvoltage protection circuit is integrated. When the output voltage exceeds the OVP threshold voltage, (Q1) turns off. The converter switch remains off until the output voltage falls below the OVP threshold voltage. As long as the output voltage is below the OVP threshold the converter continues its normal operation, until the output voltage exceeds the OVP threshold again.

8.4.2 Undervoltage Lockout

An undervoltage lockout feature prevents mis-operation of the device at input voltages below 1.5 V (typ). As long as the input voltage is below the undervoltage threshold the device remains off, with the main MOSFET switch (Q1) and the LED switch (Q2) open.

8.4.3 Thermal Shutdown

An internal thermal shutdown is implemented in the TPS61042 that shuts down the device if the typical junction temperature of 160°C is exceeded. If the device is in thermal shutdown mode, the main MOSFET switch (Q1) and the LED switch (Q2) are open.

Copyright © 2002–2014, Texas Instruments Incorporated

9 Application and Implementation

NOTE

Information in the following applications sections is not part of the TI component specification, and TI does not warrant its accuracy or completeness. TI's customers are responsible for determining suitability of components for their purposes. Customers should validate and test their design implementation to confirm system functionality.

9.1 Application Information

9.1.1 Efficiency

The overall efficiency of the application depends on the specific application conditions and mainly on the selection of the inductor. A lower inductor value increases the switching frequency and switching losses yielding in a lower efficiency. A lower inductor dc resistance has lower copper losses, giving a higher efficiency. Therefore, the efficiency can typically vary ±5% depending on the selected inductor. Figure 1 and Figure 2 can be used as a guideline for the application efficiency. These curves show the typical efficiency powering four LEDs using a 4.7 µH inductor with just 1,2 mm height. The efficiency curve in Figure 1 and Figure 2 show the efficiency delivering the power to the LEDs rather than the overall converter efficiency and is calculated as:

$$\eta = \frac{V_{LED} \times I_{LED}}{V_I \times I_I} \quad (3)$$

9.1.2 Setting The LED Current

The converter regulates the LED current by regulating the voltage across the current sense resistor (R_S). The voltage across the sense resistor is regulated to the internal reference voltage of $V_{(FB)}$ = 252 mV.

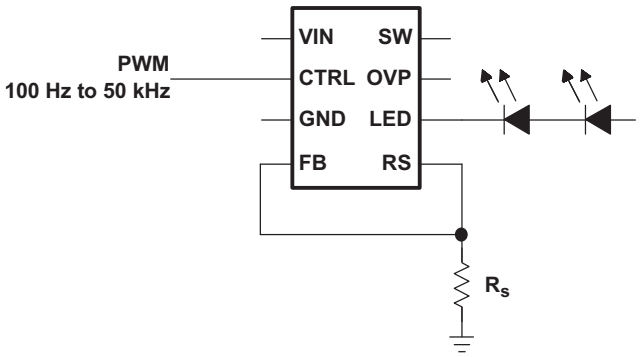

Figure 12. Setting the LED Current

The LED current can be calculated:

$$I_{LED} = \frac{V_{FB}}{R_S} = \frac{0.252\ V}{R_S} \quad (4)$$

The current programming method is used when the brightness of the LEDs is fixed or controlled by a PWM signal applied to the CTRL pin. When using a PWM signal on the CTRL pin, the LED brightness is only dependent on the PWM duty cycle, independent of the PWM frequency, or amplitude, which simplifies the system.

Alternatively, an analog voltage can be used as well to control the LED brightness.

Copyright © 2002–2014, Texas Instruments Incorporated

Application Information (continued)

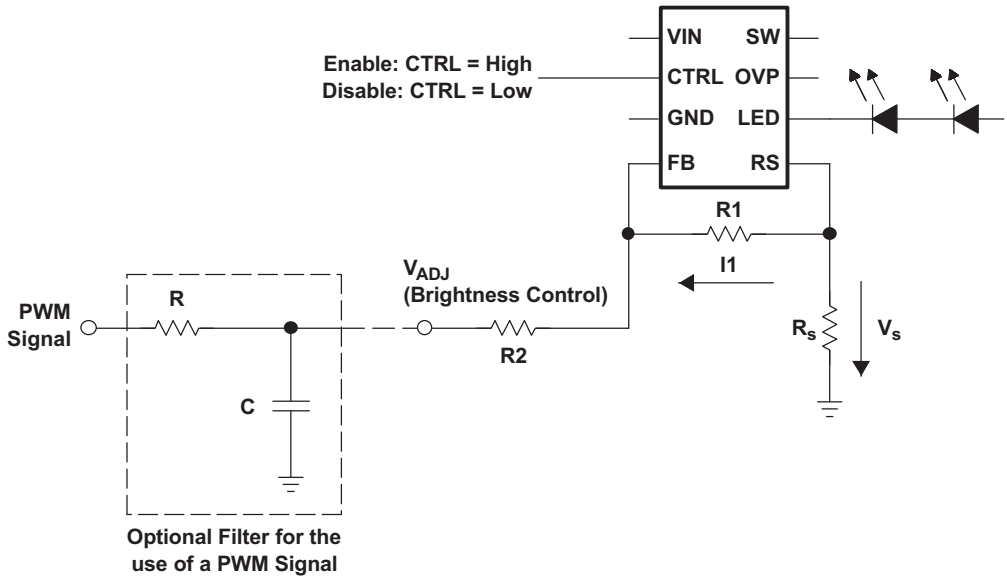

Figure 13. Setting the LED Current

In Figure 13 the LED current is determined by the voltage applied to R2 ($V_{(adj)}$) and the selection of R1, R2 and the sense resistor (R_S). In this configuration, the LED current is linear controlled instead of pulsed as in the configuration before. To select the resistor values following steps are required.

1. Select the voltage $V_{(adjmax)}$ to turn the LEDs off. → $V_{(adjmax)}$ (e.g. 3.3 V)
2. Select the voltage $V_{(adjmin)}$ to turn the LEDs fully on. → $V_{(adjmin)}$ (e.g. 0.0 V)
3. Select the maximum and minimum LED current $I_{O(max)}$ and $I_{O(min)}$. → (e.g. $I_{O(max)}$ = 20 mA, $I_{O(min)}$ = 0 mA)
4. Calculate R2 to achieve a feedback current in the range of I1 = 3 µA to 10 µA as the LEDs are fully turned on:

$$R2 = \frac{V_{ref} - V_{adj(min)}}{I1} \quad (5)$$

5. Calculation of R1

$$R1 = V_{ref} \times \frac{I_{O(max)} \times R2 + V_{adj(min)} - I_{O(min)} \times R2 - V_{adj(max)}}{V_{adj(max)} \times I_{O(max)} + V_{ref} \times I_{O(min)} - V_{adj(min)} \times I_{O(min)} - V_{ref} \times I_{O(max)}} \quad (6)$$

6. Calculation of the sense voltage (V_S) at maximum LED current

$$V_S = V_{ref} \times \left(1 + \frac{R1}{R2}\right) - \frac{R1}{R2} \times V_{adj(min)} \quad (7)$$

7. Calculation of the required sense resistor (R_S)

$$R_S = \frac{V_S}{I_{O(max)}} \quad (8)$$

9.1.3 PWM Control With Separate Enable

The control pin (CTRL) combines the enable function as well as the PWM brightness control function in one pin. For some systems an independent enable function is required. One way to implement this is to use the brightness control configuration as shown in the previous section Figure 13.

Other possible solutions are shown in Figure 14, Figure 15, Figure 16.

Copyright © 2002–2014, Texas Instruments Incorporated

Application Information (continued)

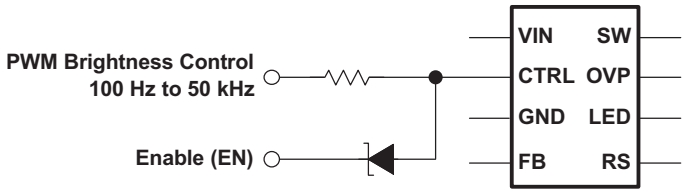

Figure 14. Separate Enable and PWM Control Using a Schottky Diode

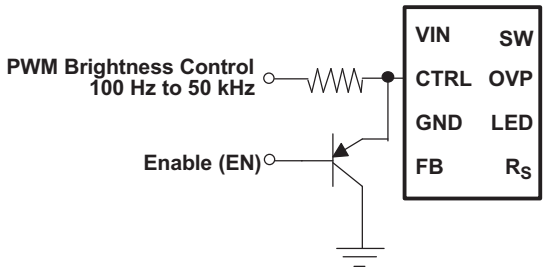

Figure 15. Separate Enable and PWM Control Using a Transistor

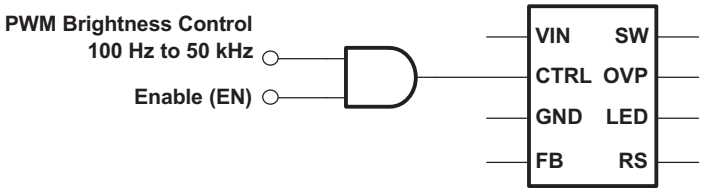

Figure 16. Separate Enable and PWM Control Using an AND Gate

9.1.4 Example Schematics

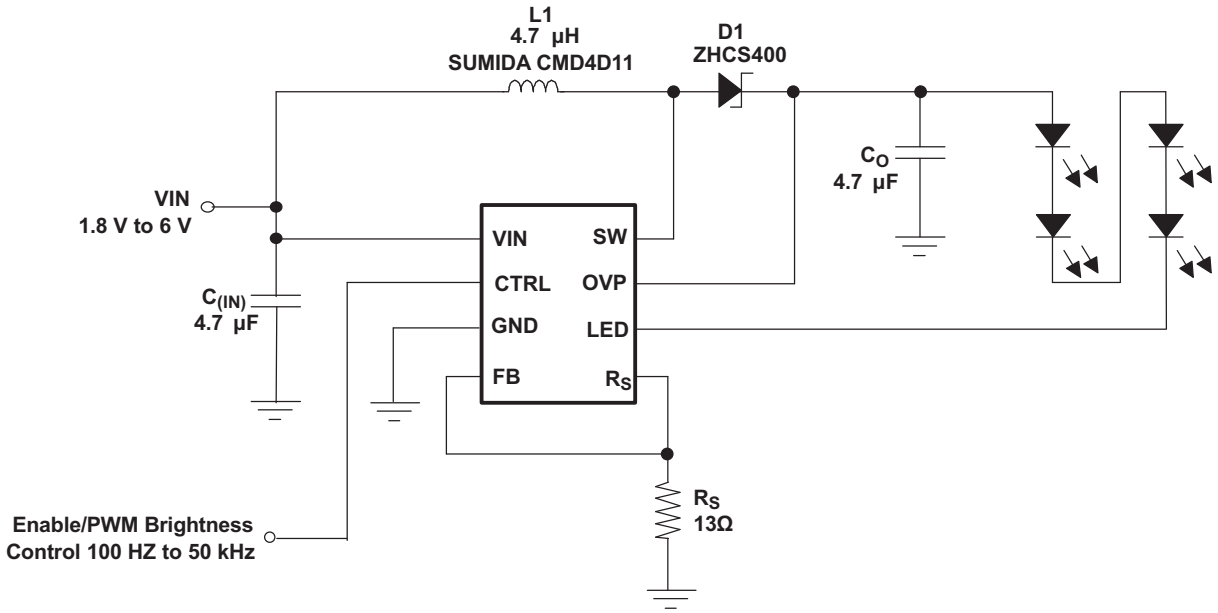

Figure 17. TPS61042 With Low LED Ripple Current and Higher Accuracy Using a 4.7 µF Output Capacitor

Application Information (continued)

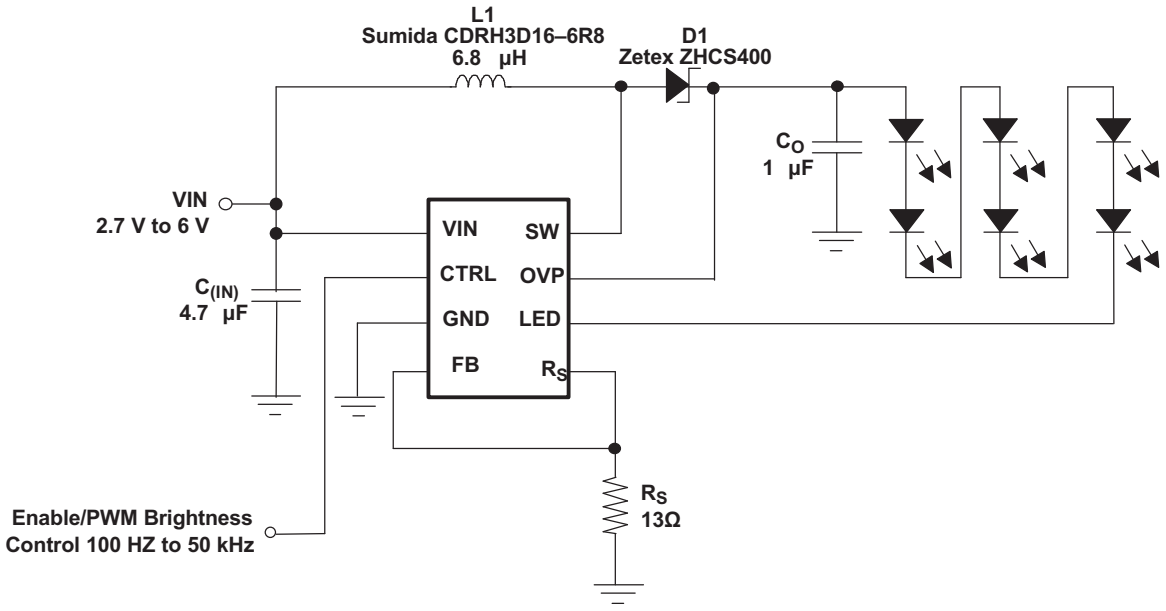

Figure 18. TPS61042 Powering 6 LEDs, Efficiency = 84%@V_I = 3.6 V/19 mA

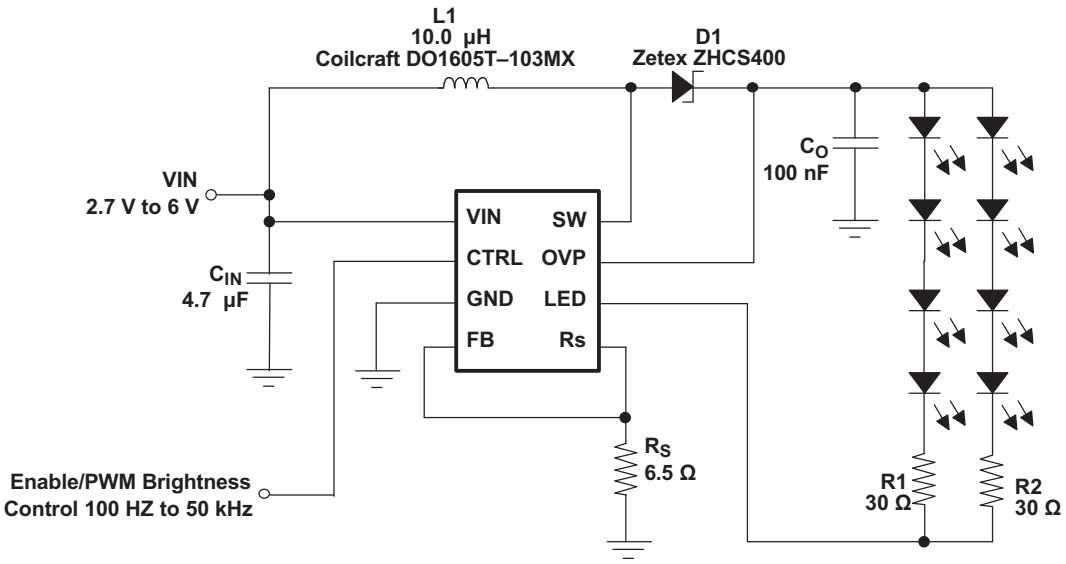

Figure 19. TPS61042 Powering 8 LEDs, Efficiency = 81%@V_I = 3.6 V/18.6 mA

Copyright © 2002–2014, Texas Instruments Incorporated

Application Information (continued)

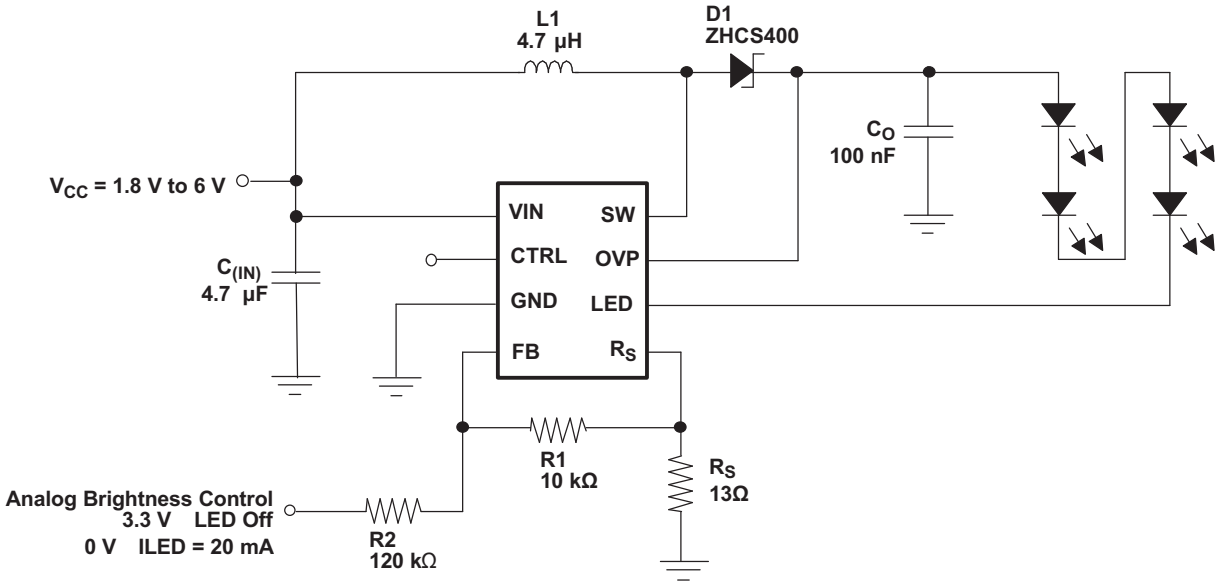

Figure 20. Adjustable Brightness Control Using an Analog Voltage

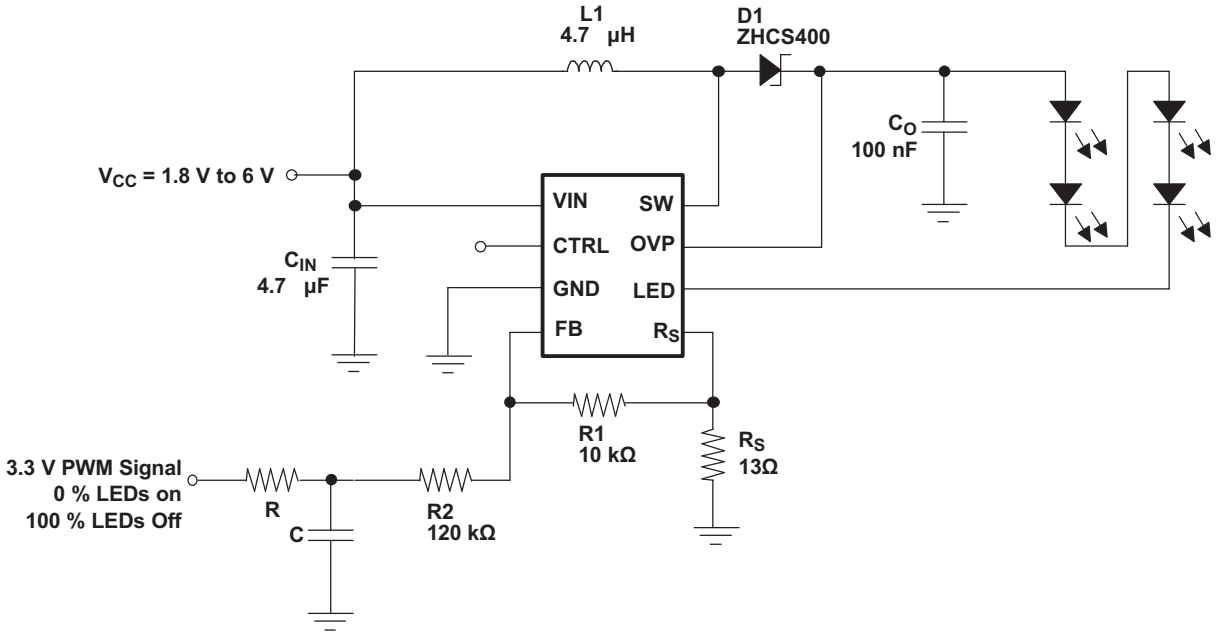

Figure 21. Alternative Adjustable Brightness Control Using PWM Signal

9.2 Typical Application

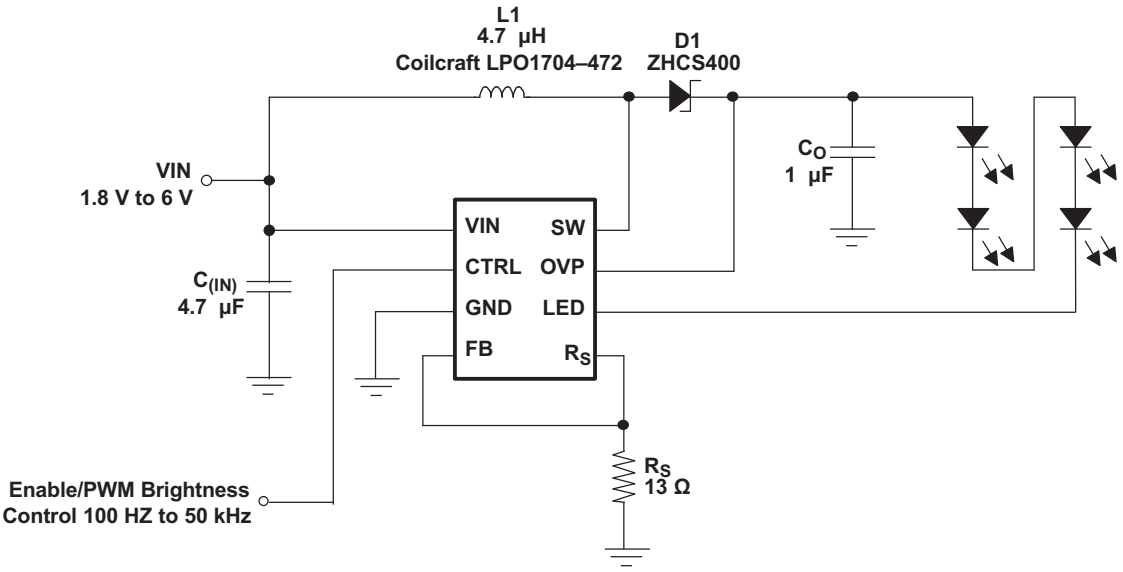

Figure 22. TPS61042 With 1,0 mm Total System Height. Efficiency = 82.7%@V_I = 3.0 V/19 mA

9.2.1 Design Requirements

Table 2. Design Parameters

DESIGN PARAMETER	Typical VALUE
Input Voltage	1.8 V to 6 V
Output Voltage	V_{IN} to 27.5 V
Dimming frequency	0.1 to 50 kHz

9.2.2 Detailed Design Procedure

9.2.2.1 Inductor Selection, Maximum Load Current, and Switching Frequency

The PFM peak current control scheme of the TPS61042 is inherently stable. The inductor value does not affect the stability of the regulator. The selection of the inductor together with the nominal LED current, input, and output voltage of the application determines the switching frequency of the converter.

The first step is to calculate the maximum load current the converter can support using the selected inductor. The inductor value has less effect on the maximum available load current and is only of secondary order. A good inductor value to start with is 4.7 µH. Depending on the application, inductor values down to 1.0 µH can be used. The maximum inductor value is determined by the maximum on time of the switch of 6 µs (typ). The peak current limit of 500 mA (typ) must be reached within this 6 µs for proper operation. The maximum load current of the converter is determined at the operation point where the converter starts to enter the continuous conduction mode. The converter must always operate in discontinuous conduction mode to maintain regulation.

Depending on the time period of the inductor current fall time being larger or smaller compared to the minimum off time of the converter (400ns typ), the maximum load current can be calculated.

Inductor fall time:

$$t_{fall} = \frac{ip \times L}{V_{OUT} - V_{IN}} \quad (9)$$

For t_{fall} ≥ 400 ns

$$I_{load\ max} = \eta \frac{ip \times V_{IN}}{2 \times V_{OUT}} \quad (10)$$

Copyright © 2002–2014, Texas Instruments Incorporated

for t_{fall} ≤ 400 ns

$$I_{LOAD\ MAX} = \eta \times \frac{ip^2 \times L \times V_{in}}{(V_{out} - V_{in}) \times (2 \times ip \times L + 2 \times 400\ ns \times V_{in})} \quad (11)$$

with:

L = selected inductor value

η = expected converter efficiency. Typically between 70% to 85%

$$I_P = 500\ mA + \frac{V_{IN}}{L} \times 100\ ns \quad (12)$$

(Peak inductor current as described in the *peak current control* section)

The above formula contains the expected converter efficiency that allows calculating the expected maximum load current the converter can support. The efficiency can be taken out of the efficiency graphs shown in Figure 1 and Figure 2 or 80% can be used as an accurate estimation.

If the converter can support the desired LED current, the next step is to calculate the converter switching frequency at the operation point, which must be ≤1 MHz. Also the converter switching frequency should be much higher than the applied PWM frequency at the CTRL pin to avoid non-linear brightness control. Assuming the converter shows no double pulses or pulse bursts (Figure 24, Figure 25) on the switch node (SW) the switching frequency at the operation point can be calculated as:

$$f_{S(ILOAD)} = \frac{2 \times I_{LOAD} (V_O - V_I + V_F)}{\left(I_{(LIM)} + \frac{V_{in}}{L} \times 100\ ns\right)^2 \times L} \quad (13)$$

with:

$I_{(LIM)}$ = minimum switch current limit (500 mA typ)

L = selected inductor value

$I_{(LOAD)}$ = nominal load or LED current

V_F = Rectifier diode forward voltage (typically 0.3 V)

The smaller the inductor value, the higher the switching frequency of the converter but the lower the efficiency.

The selected inductor must have a saturation current that meets the maximum peak current of the converter as calculated in the *peak current control* section. Use the maximum value for $I_{(LIM)}$ (600mA) for this calculation.

Another important inductor parameter is the DC resistance. The lower the DC resistance the higher the efficiency of the converter. See Table 3 and Figure 22 to Figure 21 for inductor selection.

Table 3. Possible Inductor(1)

INDUCTOR VALUE	COMPONENT SUPPLIER	SIZE
10 µH	muRata LQH43CN100K01	4,5 mm×3,2 mm×2.6 mm
4.7 µH	muRata LQH32CN4R7M11	3,2 mm×2,5 mm×2,0 mm
10 µH	Coilcraft DO1605T-103MX	5,5 mm ×4,1 mm ×1,8 mm
4.7 µH	Sumida CDRH3D16-4R7	3,8 mm×3,8 mm×1,8 mm
3.3 µH	Sumida CMD4D11- 3R3	3,5 mm×5,3 mm×1,2 mm
4.7 µH	Sumida CMD4D11- 4R7	3,5 mm×5,3 mm×1,2 mm
3.3 µH	Sumida CMD4D11- 3R3	3,5 mm×5,3 mm×1,2 mm
4.7 µH	Coiltronics SD12-4R7	5,2 mm×5,2 mm×1,2 mm
3.3 µH	Coilcraft LPO1704-332M	6,6 mm×5,5 mm×1,0 mm
4.7 µH	Coilcraft LPO1704-472M	6,6 mm×5,5 mm×1,0 mm

(1) See *Third-Party Products Disclaimer*

Copyright © 2002–2014, Texas Instruments Incorporated

9.2.2.2 Output Capacitor Selection and Line Regulation

For better output voltage filtering, a low ESR output capacitor is recommended. Ceramic capacitors have a low ESR value, but depending on the application, tantalum capacitors can be used.

The selection of the output capacitor value directly influences the output voltage ripple of the converter which also influences line regulation. The larger the output voltage ripple, the larger the line regulation, which means that the LED current changes if the input voltage changes. If a certain change in LED current gives a noticeable change in LED brightness, depends on the LED manufacturer and on the application. Applications requiring good line regulation ≤1%/V (typ) must use output capacitor values ≥1 µF.

See Table 3 and Figure 22 to Figure 21 for the selection of the output capacitor.

Assuming the converter does not show double pulses or pulse bursts on the switch node (SW), the output voltage ripple is calculated as (see Figure 24, Figure 25):

$$\Delta V_O = \frac{I_O}{C_O} \times \left[\frac{1}{f_{S(LOAD)}} - \frac{\left(I_{(LIM)} + \frac{V_{in}}{L} \times 100\ ns \right) \times L}{V_O + V_F - V_I} \right] + I_P \times ESF \quad (14)$$

with:

$I_{(LIM)}$ = minimum switch current limit (400 mA typ)
L = selected inductor value
$I_{(LOAD)}$ = nominal load current
f_S = switching frequency at the nominal load current as calculated before.
V_F = rectifier diode forward voltage (0.3 V typ)
C_O = selected output capacitor
ESR = output capacitor ESR value

Copyright © 2002–2014, Texas Instruments Incorporated

9.2.2.3 Input Capacitor Selection

For good input voltage filtering, low ESR ceramic capacitors are recommended. A 4.7 µF ceramic input capacitor is sufficient for most applications. For better input voltage filtering the capacitor value can be increased. Refer to Table 2 and Figure 22 to Figure 21 for input capacitor selection.

Table 4. Possible Input and Output Capacitors(1)

CAPACITOR	VOLTAGE RATING	COMPONENT SUPPLIER	COMMENTS
4.7 µF/X5R/0805	6.3 V	Tayo Yuden JMK212BY475MG	C_I
10 µF/X5R/0805	6.3 V	Tayo Yuden JMK212BJ106MG	C_I
100 nF		Any	C_O
220 nF		Any	C_O
470 nF		Any	C_O
1.0 µF/X7R/1206	25 V	Tayo Yuden TMK316BJ105KL	C_O
1.0 µF/X7R/1206	35 V	Tayo Yuden GMK316BJ105KL	C_O
4.7 µF/X5R/1210	25 V	Tayo Yuden TMK325BJ475MG	C_O

(1) See *Third-Party Products Disclaimer*

9.2.2.4 Diode Selection

To achieve high efficiency, a Schottky diode must be used. The current rating of the diode must meet the peak current rating of the converter as it is calculated in the *peak current control* section. Use the maximum value for $I_{(Lim)}$ for this calculation. See Table 5 and Figure 22 to Figure 21 for the Schottky diode selection.

Table 5. Possible Diodes(1)

COMPONENT SUPPLIER	REVERSE VOLTAGE
ON Semiconductor MBR0530	30 V
ON Semiconductor MBR0520	20 V
Toshiba CRS02	30 V
Zetex ZHCS400	40 V

(1) See *Third-Party Products Discalimer*

Copyright © 2002–2014, Texas Instruments Incorporated

9.2.3 Application Curves

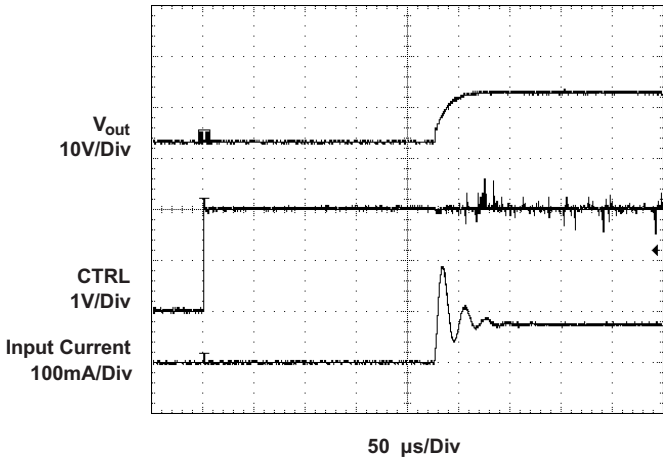

Figure 23. Softstart

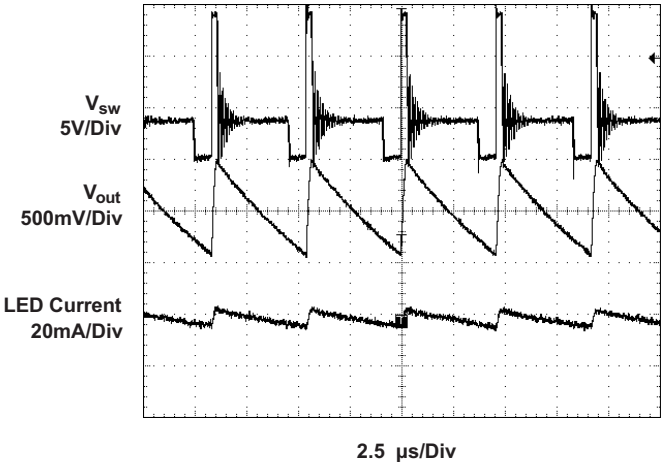

Figure 24. PFM Operation

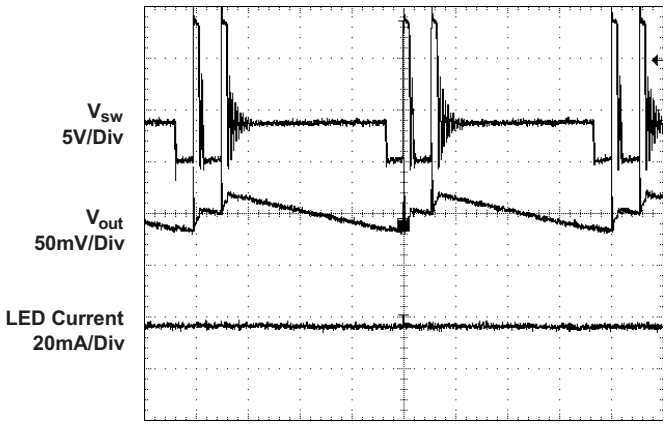

Figure 25. Bust Mode Operation

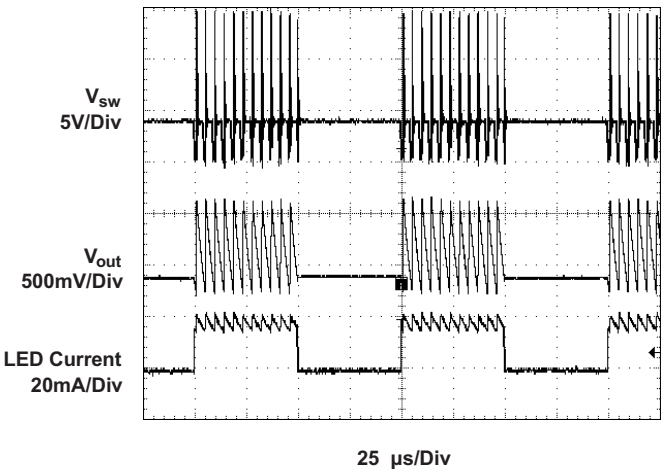

Figure 26. PWM Dimming

Copyright © 2002–2014, Texas Instruments Incorporated

10 Power Supply Recommendations

The device is designed to operate from an input voltage supply range between 1.8 V and 6 V. The input power supply's output current needs to be rated according to the supply voltage, output voltage and output current of TPS61042.

11 Layout

11.1 Layout Guidelines

In all switching power supplies the layout is an important step in the design, especially at high peak currents and switching frequencies. If the layout is not carefully done, the regulator might show noise problems and duty cycle jitter.

The input capacitor should be placed as close as possible to the input pin for good input voltage filtering. The inductor and diode must be placed as close as possible to the switch pin to minimize noise coupling into other circuits. Since the feedback pin and network is a high impedance circuit, the feedback network should be routed away from the inductor.

11.2 Layout Example

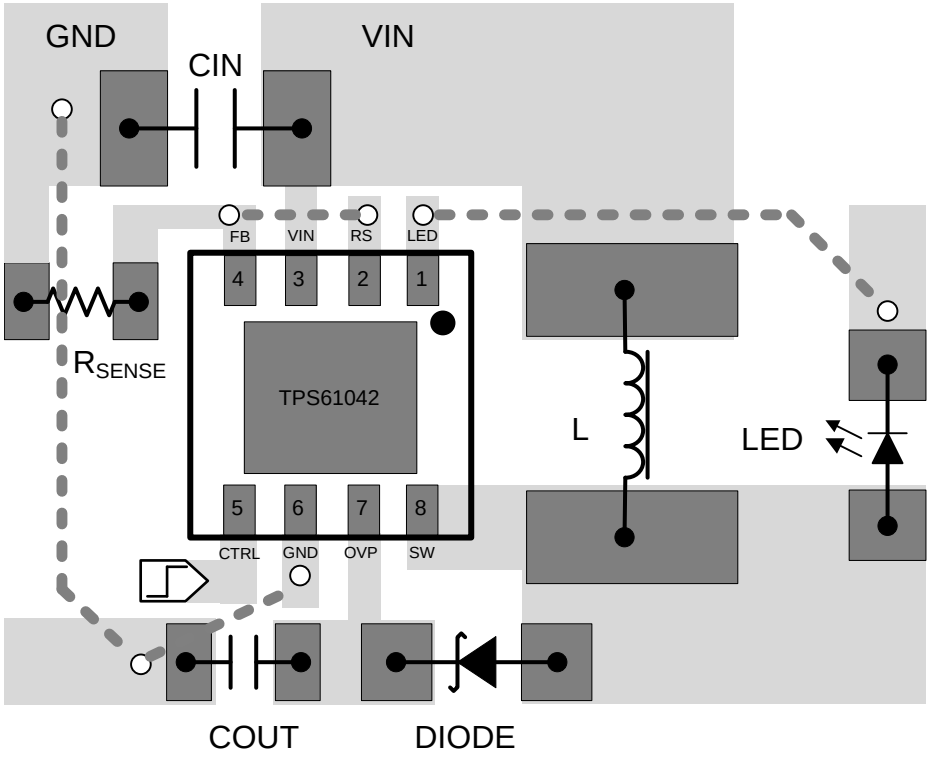

Figure 27. Layout Example

11.2.1 Thermal Considerations

The TPS61042 comes in a thermally enhanced QFN package. The package includes a thermal pad improving the thermal capabilities of the package. See the *QFN/SON PCB Attachment* application note (SLUA271).

The thermal resistance junction to ambient $R_{\Theta JA}$ of the QFN package greatly depends on the PCB layout. Using thermal vias and wide PCB traces improves the thermal resistance $R_{\Theta JA}$. Under normal operation conditions no PCB vias are required for the thermal pad. However, the thermal PowerPAD™ must be soldered to the PCB.

Copyright © 2002–2014, Texas Instruments Incorporated

12 Device and Documentation Support

12.1 Device Support

12.1.1 Third-Party Products Disclaimer

TI'S PUBLICATION OF INFORMATION REGARDING THIRD-PARTY PRODUCTS OR SERVICES DOES NOT CONSTITUTE AN ENDORSEMENT REGARDING THE SUITABILITY OF SUCH PRODUCTS OR SERVICES OR A WARRANTY, REPRESENTATION OR ENDORSEMENT OF SUCH PRODUCTS OR SERVICES, EITHER ALONE OR IN COMBINATION WITH ANY TI PRODUCT OR SERVICE.

12.2 Documentation Support

12.2.1 Related Documentation

QFN/SON PCB Attachment application note (SLUA271)

12.3 Trademarks

PowerPAD is a trademark of Texas Instruments.
All other trademarks are the property of their respective owners.

12.4 Electrostatic Discharge Caution



These devices have limited built-in ESD protection. The leads should be shorted together or the device placed in conductive foam during storage or handling to prevent electrostatic damage to the MOS gates.

12.5 Glossary

SLYZ022 — *TI Glossary*.

This glossary lists and explains terms, acronyms, and definitions.

13 Mechanical, Packaging, and Orderable Information

The following pages include mechanical, packaging, and orderable information. This information is the most current data available for the designated devices. This data is subject to change without notice and revision of this document. For browser-based versions of this data sheet, refer to the left-hand navigation.

Copyright © 2002–2014, Texas Instruments Incorporated

PACKAGING INFORMATION

Orderable part number	Status (1)	Material type (2)	Package | Pins	Package qty | Carrier	RoHS (3)	Lead finish/ Ball material (4)	MSL rating/ Peak reflow (5)	Op temp (°C)	Part marking (6)
TPS61042DRBR	Active	Production	SON (DRB) | 8	3000 | LARGE T&R	Yes	Call TI | Nipdau	Level-2-260C-1 YEAR	-40 to 85	BHS
TPS61042DRBR.B	Active	Production	SON (DRB) | 8	3000 | LARGE T&R	Yes	Call TI | Nipdau	Level-2-260C-1 YEAR	-40 to 85	BHS
TPS61042DRBRG4	Active	Production	SON (DRB) | 8	3000 | LARGE T&R	Yes	Call TI | Nipdau	Level-2-260C-1 YEAR	-40 to 85	BHS
TPS61042DRBT	Active	Production	SON (DRB) | 8	250 | SMALL T&R	Yes	Call TI | Nipdau	Level-2-260C-1 YEAR	-	BHS
TPS61042DRBT.B	Active	Production	SON (DRB) | 8	250 | SMALL T&R	Yes	Call TI | Nipdau	Level-2-260C-1 YEAR	-40 to 85	BHS
TPS61042DRBTG4	Active	Production	SON (DRB) | 8	250 | SMALL T&R	Yes	Call TI | Nipdau	Level-2-260C-1 YEAR	See TPS61042DRBT	BHS

(1) **Status:** For more details on status, see our product life cycle.

(2) **Material type:** When designated, preproduction parts are prototypes/experimental devices, and are not yet approved or released for full production. Testing and final process, including without limitation quality assurance, reliability performance testing, and/or process qualification, may not yet be complete, and this item is subject to further changes or possible discontinuation. If available for ordering, purchases will be subject to an additional waiver at checkout, and are intended for early internal evaluation purposes only. These items are sold without warranties of any kind.

(3) **RoHS values:** Yes, No, RoHS Exempt. See the TI RoHS Statement for additional information and value definition.

(4) **Lead finish/Ball material:** Parts may have multiple material finish options. Finish options are separated by a vertical ruled line. Lead finish/Ball material values may wrap to two lines if the finish value exceeds the maximum column width.

(5) **MSL rating/Peak reflow:** The moisture sensitivity level ratings and peak solder (reflow) temperatures. In the event that a part has multiple moisture sensitivity ratings, only the lowest level per JEDEC standards is shown. Refer to the shipping label for the actual reflow temperature that will be used to mount the part to the printed circuit board.

(6) **Part marking:** There may be an additional marking, which relates to the logo, the lot trace code information, or the environmental category of the part.

Multiple part markings will be inside parentheses. Only one part marking contained in parentheses and separated by a "~" will appear on a part. If a line is indented then it is a continuation of the previous line and the two combined represent the entire part marking for that device.

Important Information and Disclaimer: The information provided on this page represents TI's knowledge and belief as of the date that it is provided. TI bases its knowledge and belief on information provided by third parties, and makes no representation or warranty as to the accuracy of such information. Efforts are underway to better integrate information from third parties. TI has taken and continues to take reasonable steps to provide representative and accurate information but may not have conducted destructive testing or chemical analysis on incoming materials and chemicals. TI and TI suppliers consider certain information to be proprietary, and thus CAS numbers and other limited information may not be available for release.

In no event shall TI's liability arising out of such information exceed the total purchase price of the TI part(s) at issue in this document sold by TI to Customer on an annual basis.

TAPE AND REEL INFORMATION

REEL DIMENSIONS

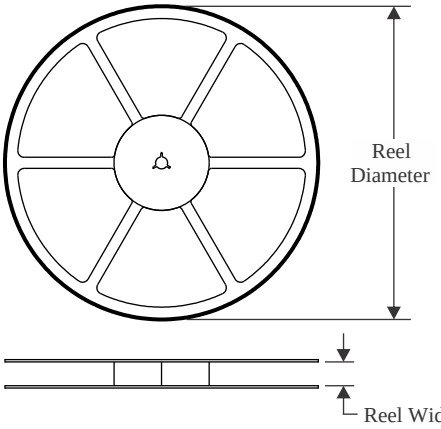

TAPE DIMENSIONS

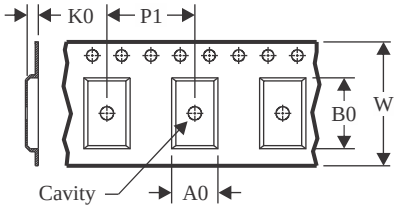

A0	Dimension designed to accommodate the component width
B0	Dimension designed to accommodate the component length
K0	Dimension designed to accommodate the component thickness
W	Overall width of the carrier tape
P1	Pitch between successive cavity centers

QUADRANT ASSIGNMENTS FOR PIN 1 ORIENTATION IN TAPE

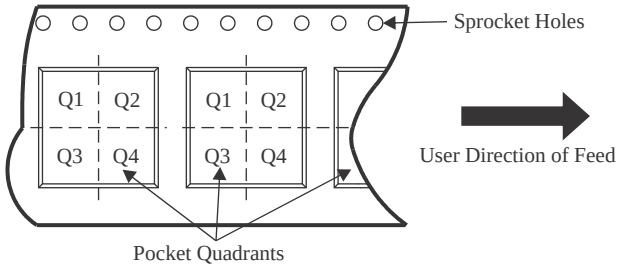

*All dimensions are nominal

Device	Package Type	Package Drawing	Pins	SPQ	Reel Diameter (mm)	Reel Width W1 (mm)	A0 (mm)	B0 (mm)	K0 (mm)	P1 (mm)	W (mm)	Pin1 Quadrant
TPS61042DRBR	SON	DRB	8	3000	330.0	12.4	3.3	3.3	1.1	8.0	12.0	Q2
TPS61042DRBT	SON	DRB	8	250	180.0	12.4	3.3	3.3	1.1	8.0	12.0	Q2

TAPE AND REEL BOX DIMENSIONS

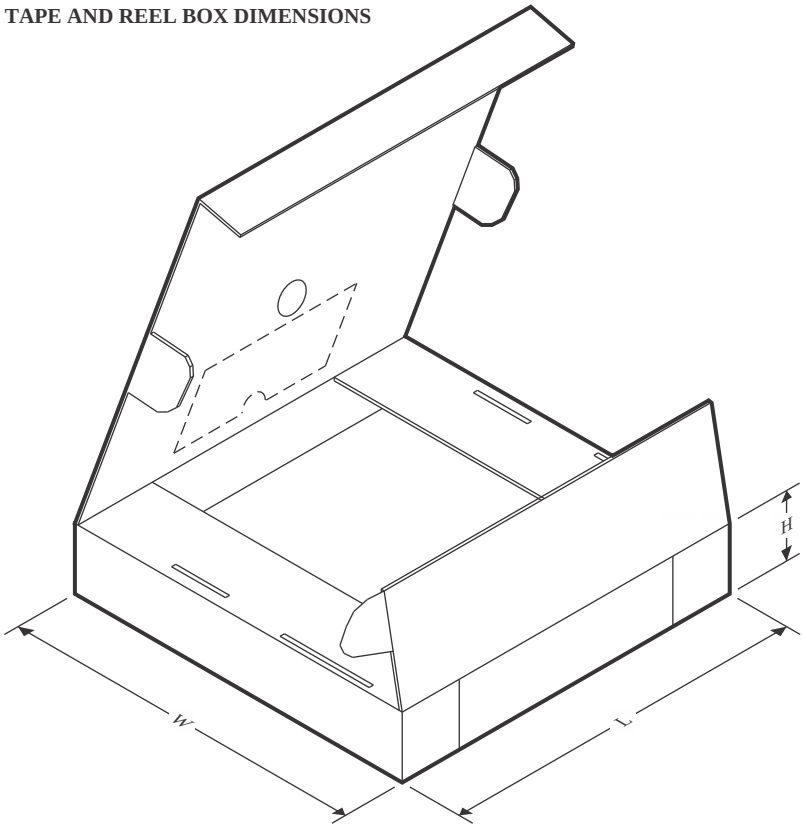

*All dimensions are nominal

Device	Package Type	Package Drawing	Pins	SPQ	Length (mm)	Width (mm)	Height (mm)
TPS61042DRBR	SON	DRB	8	3000	360.0	360.0	36.0
TPS61042DRBT	SON	DRB	8	250	210.0	185.0	35.0

GENERIC PACKAGE VIEW

DRB 8

VSON - 1 mm max height

PLASTIC SMALL OUTLINE - NO LEAD



Images above are just a representation of the package family, actual package may vary.
Refer to the product data sheet for package details.

4203482/L

DRB0008B

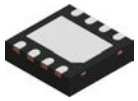

PACKAGE OUTLINE

VSON - 1 mm max height

PLASTIC SMALL OUTLINE - NO LEAD

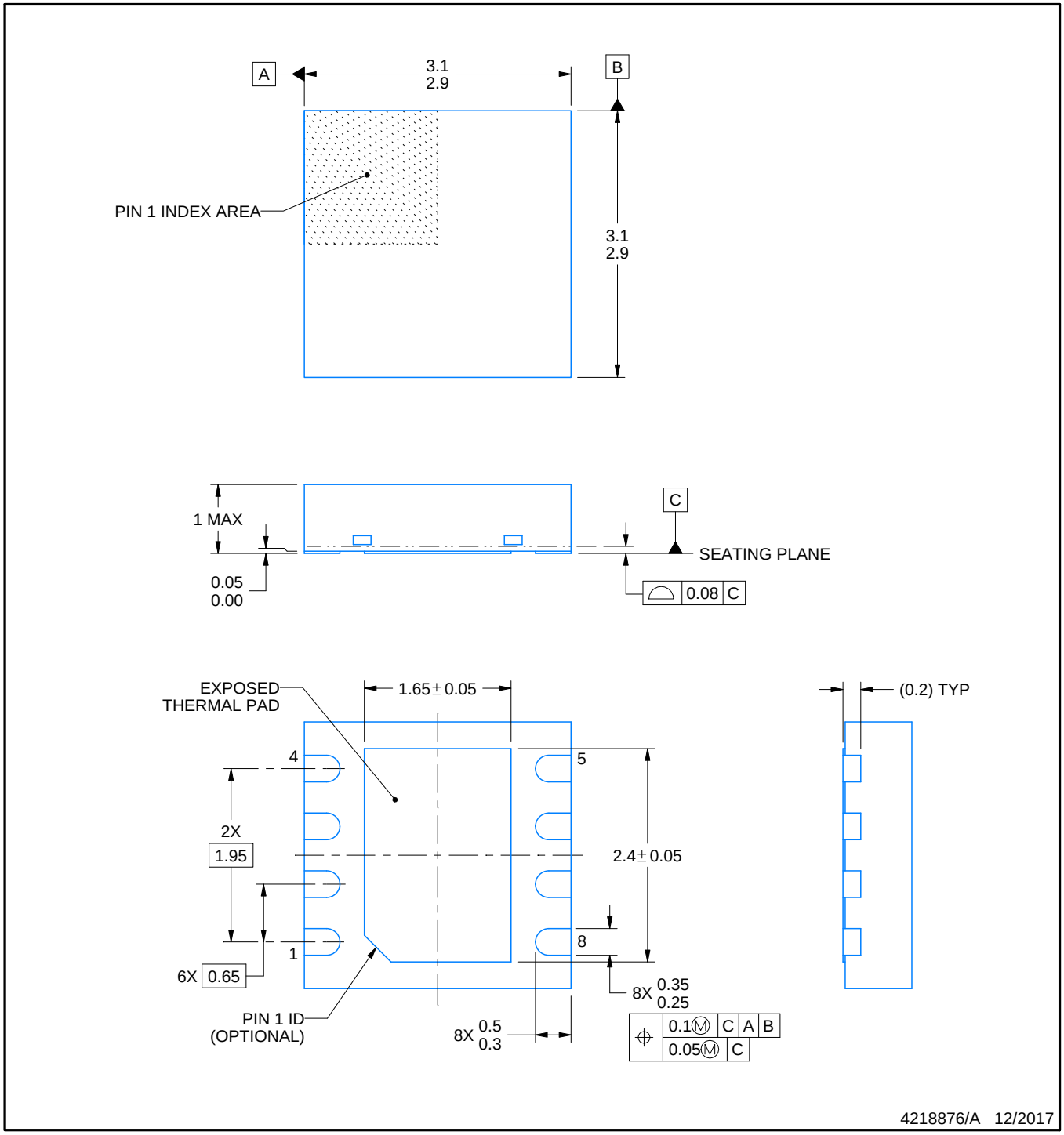

NOTES:

1. All linear dimensions are in millimeters. Any dimensions in parenthesis are for reference only. Dimensioning and tolerancing per ASME Y14.5M.
2. This drawing is subject to change without notice.
3. The package thermal pad must be soldered to the printed circuit board for thermal and mechanical performance.

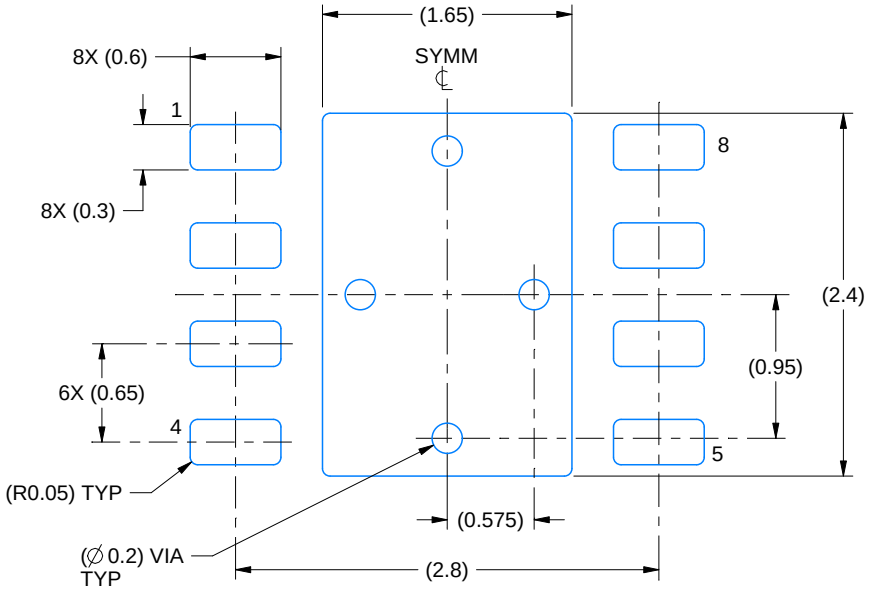

LAND PATTERN EXAMPLE
SCALE:20X

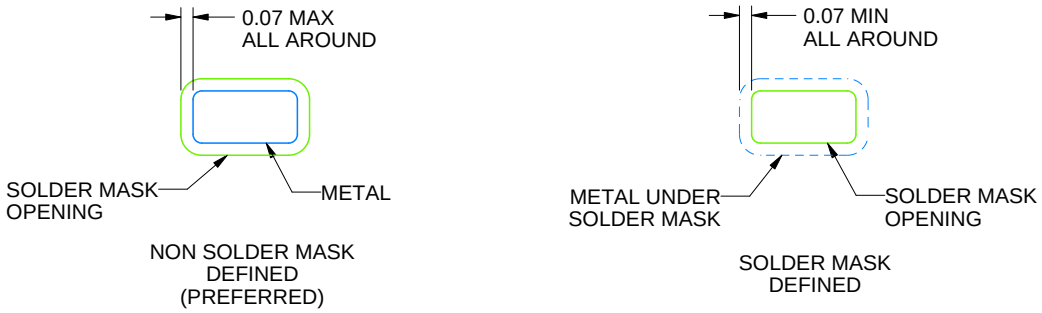

SOLDER MASK DETAILS

4218876/A 12/2017

NOTES: (continued)

4. This package is designed to be soldered to a thermal pad on the board. For more information, see Texas Instruments literature number SLUA271 (www.ti.com/lit/slua271).
5. Vias are optional depending on application, refer to device data sheet. If any vias are implemented, refer to their locations shown on this view. It is recommended that vias under paste be filled, plugged or tented.

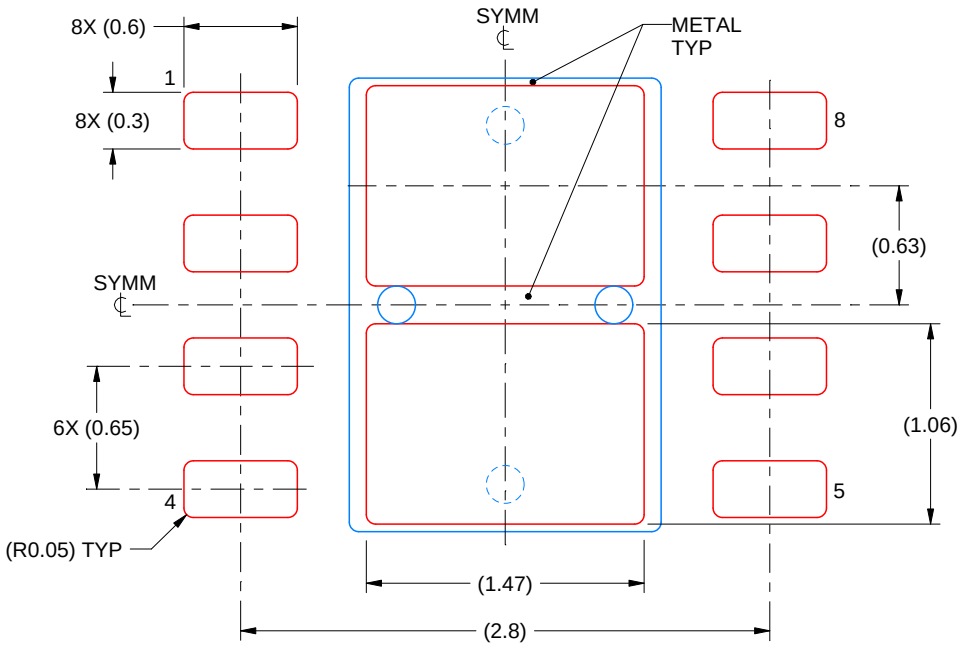

SOLDER PASTE EXAMPLE
BASED ON 0.125 mm THICK STENCIL

EXPOSED PAD
81% PRINTED SOLDER COVERAGE BY AREA
SCALE:25X

4218876/A 12/2017

NOTES: (continued)

6. Laser cutting apertures with trapezoidal walls and rounded corners may offer better paste release. IPC-7525 may have alternate design recommendations.

PACKAGE OUTLINE

DRB0008A

VSON - 1 mm max height

PLASTIC SMALL OUTLINE - NO LEAD

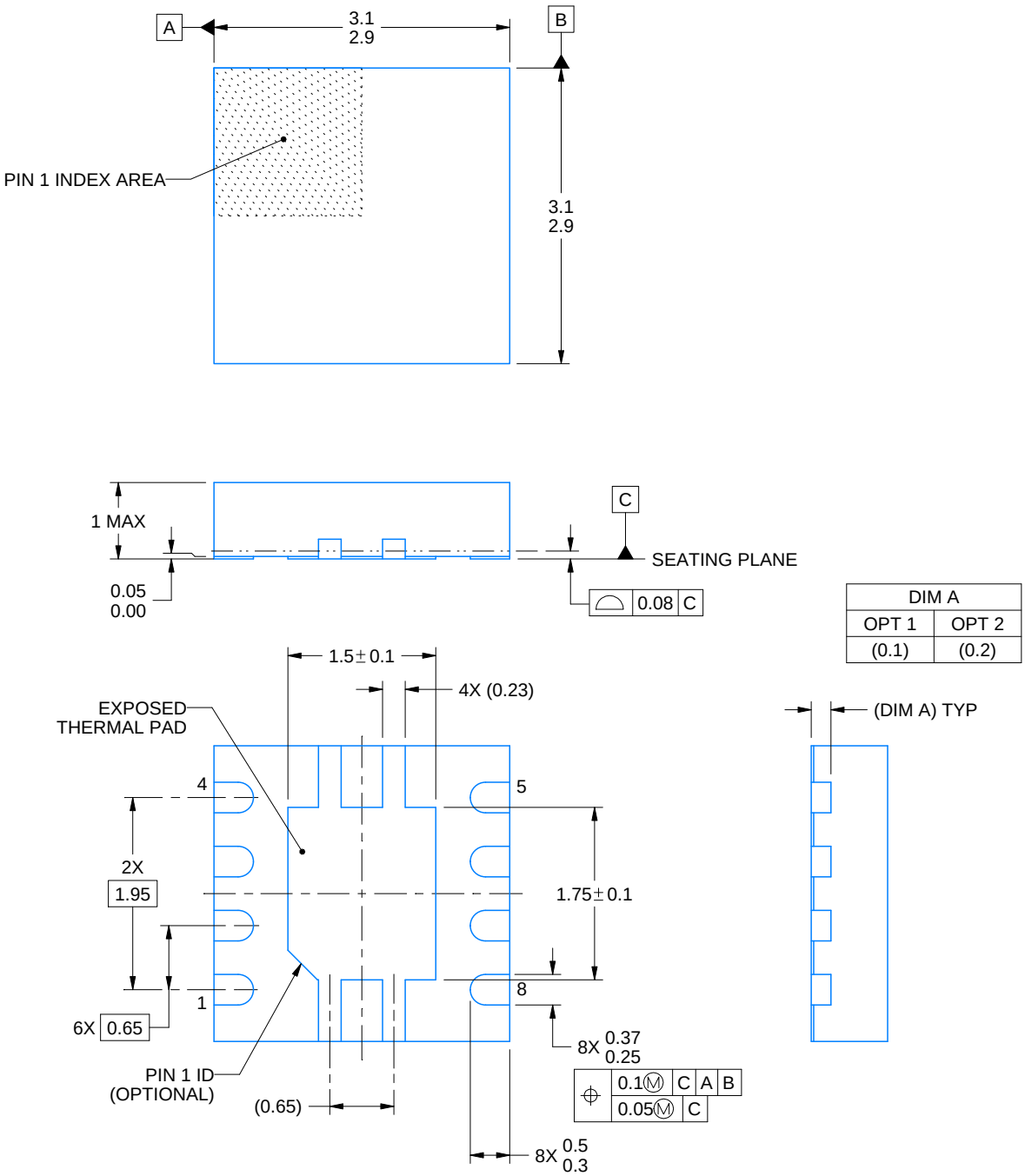

NOTES:

1. All linear dimensions are in millimeters. Any dimensions in parenthesis are for reference only. Dimensioning and tolerancing per ASME Y14.5M.
2. This drawing is subject to change without notice.
3. The package thermal pad must be soldered to the printed circuit board for thermal and mechanical performance.

EXAMPLE BOARD LAYOUT

DRB0008A

VSON - 1 mm max height

PLASTIC SMALL OUTLINE - NO LEAD

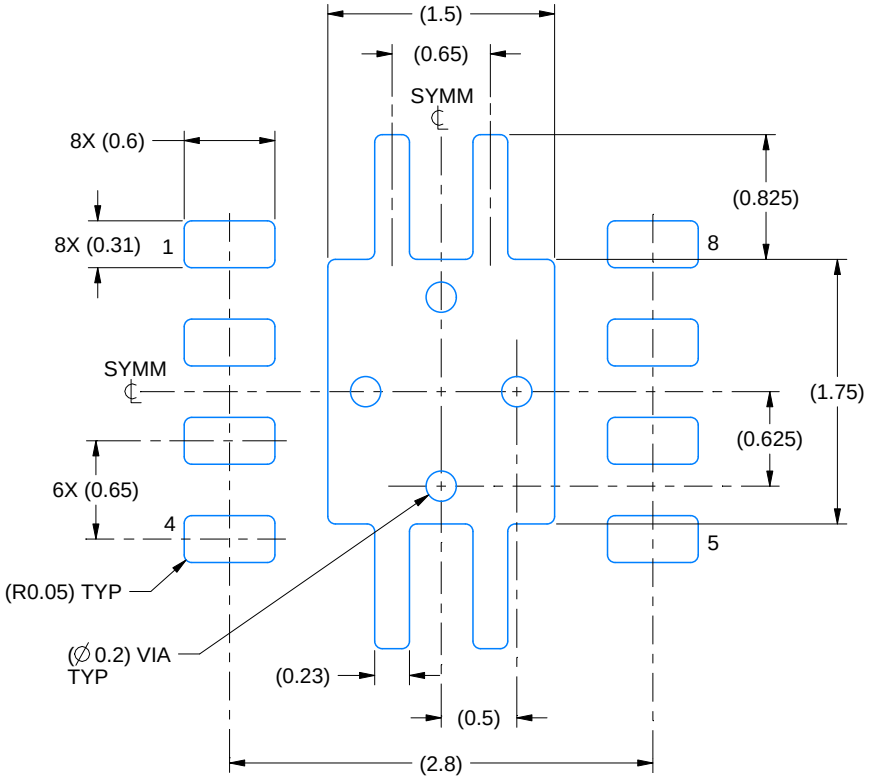

LAND PATTERN EXAMPLE
EXPOSED METAL SHOWN
SCALE:20X

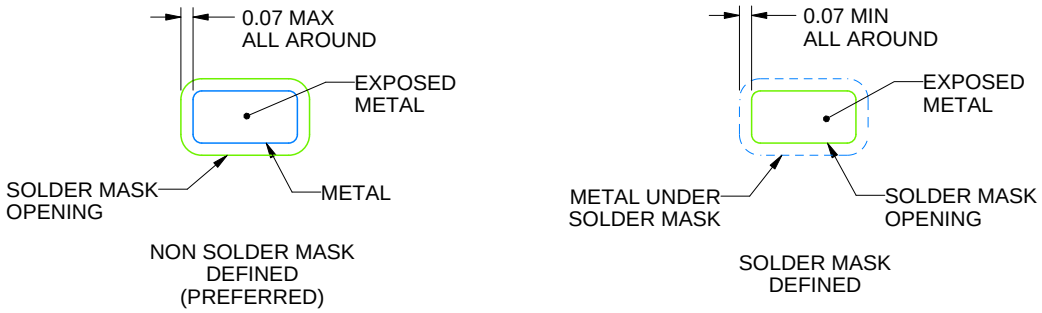

SOLDER MASK DETAILS

4218875/A 01/2018

NOTES: (continued)

4. This package is designed to be soldered to a thermal pad on the board. For more information, see Texas Instruments literature number SLUA271 (www.ti.com/lit/slua271).
5. Vias are optional depending on application, refer to device data sheet. If any vias are implemented, refer to their locations shown on this view. It is recommended that vias under paste be filled, plugged or tented.

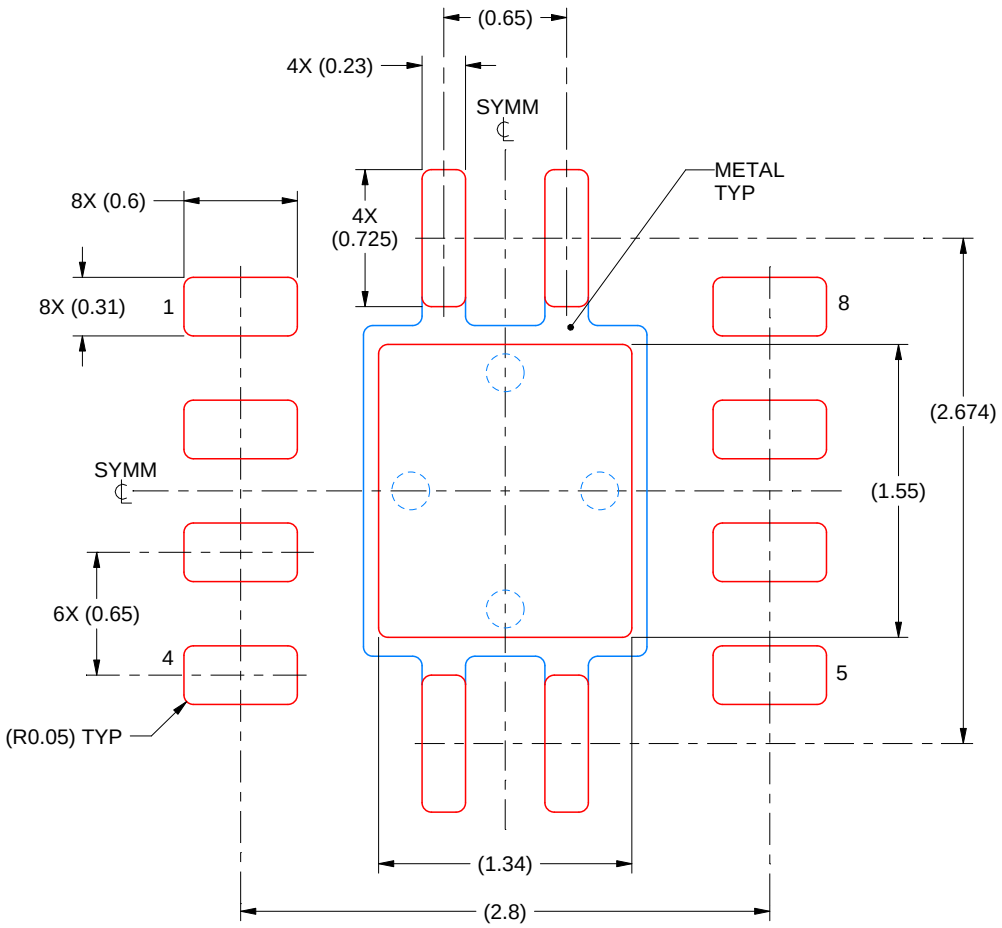

SOLDER PASTE EXAMPLE
BASED ON 0.125 mm THICK STENCIL

EXPOSED PAD
84% PRINTED SOLDER COVERAGE BY AREA
SCALE:25X

4218875/A 01/2018

NOTES: (continued)

6. Laser cutting apertures with trapezoidal walls and rounded corners may offer better paste release. IPC-7525 may have alternate design recommendations.

IMPORTANT NOTICE AND DISCLAIMER

TI PROVIDES TECHNICAL AND RELIABILITY DATA (INCLUDING DATASHEETS), DESIGN RESOURCES (INCLUDING REFERENCE DESIGNS), APPLICATION OR OTHER DESIGN ADVICE, WEB TOOLS, SAFETY INFORMATION, AND OTHER RESOURCES “AS IS” AND WITH ALL FAULTS, AND DISCLAIMS ALL WARRANTIES, EXPRESS AND IMPLIED, INCLUDING WITHOUT LIMITATION ANY IMPLIED WARRANTIES OF MERCHANTABILITY, FITNESS FOR A PARTICULAR PURPOSE OR NON-INFRINGEMENT OF THIRD PARTY INTELLECTUAL PROPERTY RIGHTS.

These resources are intended for skilled developers designing with TI products. You are solely responsible for (1) selecting the appropriate TI products for your application, (2) designing, validating and testing your application, and (3) ensuring your application meets applicable standards, and any other safety, security, regulatory or other requirements.

These resources are subject to change without notice. TI grants you permission to use these resources only for development of an application that uses the TI products described in the resource. Other reproduction and display of these resources is prohibited. No license is granted to any other TI intellectual property right or to any third party intellectual property right. TI disclaims responsibility for, and you fully indemnify TI and its representatives against any claims, damages, costs, losses, and liabilities arising out of your use of these resources.

TI’s products are provided subject to TI’s Terms of Sale, TI’s General Quality Guidelines, or other applicable terms available either on ti.com or provided in conjunction with such TI products. TI’s provision of these resources does not expand or otherwise alter TI’s applicable warranties or warranty disclaimers for TI products. Unless TI explicitly designates a product as custom or customer-specified, TI products are standard, catalog, general purpose devices.

TI objects to and rejects any additional or different terms you may propose.

Copyright © 2026, Texas Instruments Incorporated

Last updated 10/2025