TPS6287x 2.7V to 6V Input, 6A, 9A, 12A, 15A, Fast Transient Stackable Synchronous Step-Down Converters With I²C Interface and Remote Sense

1 Features

- Available as an integrated-inductor power module: TPSM8287A06, TPSM8287A10, TPSM8287A12, TPSM8287A15
- Functional Safety-Capable
  - Documentation available to aid functional safety system design
- 2.7V to 6V input voltage range
- 6A, 9A, 12A, 15A pin-to-pin device family
- Four output voltage ranges:
  - 0.4V to 0.71875V in 1.25mV steps
  - 0.4V to 1.0375V in 2.5mV steps
  - 0.4V to 1.675V in 5mV steps
  - 0.8V to 3.35V in 10mV steps
- Output voltage accuracy ±1%
- Differential remote sensing
- 7mΩ and 4.5mΩ internal power MOSFETs
- Adjustable external compensation
- Power-save or forced-PWM operation
- Optional synchronization to external clock or spread-spectrum operation
- I²C-compatible interface up to 1MHz
- Stackable for increased output current capability
- Thermal warning and thermal shutdown
- Active output discharge
- Power-good output with a window comparator
- Available in 2.55mm × 3.55mm × 1mm VQFN package with wettable flanks
- –40°C to 125°C junction temperature, T_J

2 Applications

- Optical networks, storage
- FPGA, ASIC, and digital core supply
- DDR memory supply

Device Information

PART NUMBER	CURRENT RATING(1)	PACKAGE(2)
TPS62870	6A	RXS (VQFN-FCRLF, 16)
TPS62871	9A	
TPS62872	12A	
TPS62873	15A	

(1) For more information, see Section 12.
(2) See the *Device Options* table.

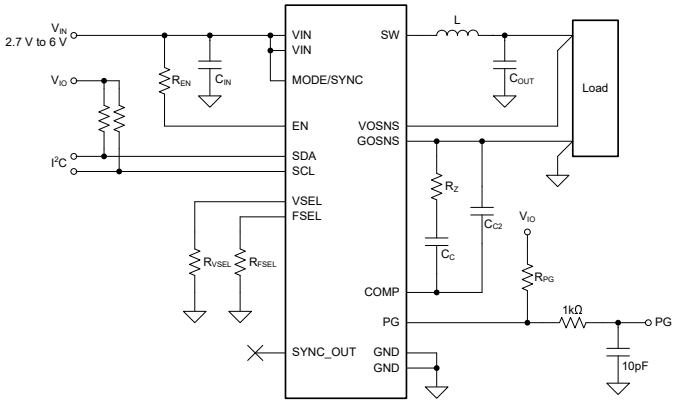

TPS6287x Simplified Schematic

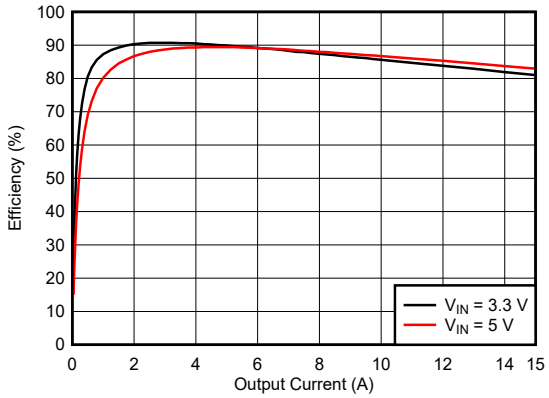

Efficiency vs Output Current
V_{OUT} = 0.75V, FPWM, f_{SW} = 2.25MHz

An IMPORTANT NOTICE at the end of this data sheet addresses availability, warranty, changes, use in safety-critical applications, intellectual property matters and other important disclaimers. PRODUCTION DATA.

3 Description

The TPS6287x is a family of pin-to-pin 6A, 9A, 12A, and 15A synchronous step-down DC/DC converters with differential remote sensing. For each current rating, there are full-featured device variants with I^2C interface and limited-featured device variants without I^2C interface. All devices offer high efficiency and ease of use. Low-resistance power switches allow up to 15A continuous output current at high ambient temperatures.

The devices can operate in stacked mode to deliver higher output currents or to spread the power dissipation across multiple devices.

The TPS6287x family implements a fixed-frequency DCS-Control scheme that supports fast transients. The devices can operate in power save mode for maximum efficiency, or forced-PWM mode for the best transient performance and lowest output voltage ripple.

The remote sensing feature allows voltage regulation at the point-of-load, hence the device achieves better than ±1% DC voltage accuracy under all operating conditions.

The switching frequency is resistor-selectable through the FSEL pin. The switching frequency can be set to 1.5MHz, 2.25MHz, 2.5MHz, or 3.0MHz, or synchronized to an external clock in the same frequency range.

The I^2C-compatible interface offers several control, monitoring, and warning features, such as voltage monitoring and temperature-related warnings. The output voltage can be quickly adjusted to adapt the power consumption of the load to the performance needs of the application through the I^2C-compatible interface. The default start-up voltage is resistor-selectable through the VSEL pin.

Copyright © 2025 Texas Instruments Incorporated

Table of Contents

1 Features....1
2 Applications....1
3 Description....2
4 Device Options....4
5 Pin Configuration and Functions....6
6 Specifications....8
6.1 Absolute Maximum Ratings....8
6.2 ESD Ratings....8
6.3 Recommended Operating Conditions....8
6.4 Thermal Information....9
6.5 Electrical Characteristics....9
6.6 I^2C Interface Timing Characteristics....12
6.7 Timing Requirements....12
6.8 Typical Characteristics....14
7 Detailed Description....15
7.1 Overview....15
7.2 Functional Block Diagram....16
7.3 Feature Description....16
7.4 Device Functional Modes....33
7.5 Programming....34
8 Register Map....38
9 Application and Implementation....44
9.1 Application Information....44
9.2 Typical Application....44
9.3 Best Design Practices....53
9.4 Power Supply Recommendations....53
9.5 Layout....53
10 Device and Documentation Support....55
10.1 Device Support....55
10.2 Receiving Notification of Documentation Updates....55
10.3 Support Resources....55
10.4 Trademarks....55
10.5 Electrostatic Discharge Caution....55
10.6 Glossary....55
11 Revision History....55
12 Mechanical, Packaging, and Orderable Information....56

4 Device Options

DEVICE NUMBER	OUTPUT CURRENT	START-UP VOLTAGE AND I²C ADDRESS (1) (2) (3)	VSEL SETTING	SPREAD SPECTRUM CLOCKING	SOFT-START TIME
TPS62873Z0WRXSR	15A	0.800V, 0x40	6.2kΩ to GND	Default setting = off	Default setting = 1ms
		0.750V, 0x41	Short to GND		
		0.875V, 0x42	Short to VIN		
		0.800V, 0x43	47kΩ to VIN		
TPS62873Z1WRXSR	15A	0.600V, 0x40	6.2kΩ to GND	Default setting = off	Default setting = 1ms
		0.750V, 0x41	Short to GND		
		0.875V, 0x42	Short to VIN		
		0.900V, 0x43	47kΩ to VIN		
TPS62873Z2WRXSR	15A	0.500V, 0x40	6.2kΩ to GND	Default setting = off	Default setting = 1ms
		0.750V, 0x41	Short to GND		
		0.875V, 0x42	Short to VIN		
		1.050V, 0x43	47kΩ to VIN		
TPS62873Z4WRXSR	15A	0.850V, 0x40	6.2kΩ to GND	Default setting = off	Default setting = 1ms
		0.750V, 0x41	Short to GND		
		0.875V, 0x42	Short to VIN		
		1.000V, 0x43	47kΩ to VIN		
TPS62873Z5WRXSR	15A	0.400V, 0x40	6.2kΩ to GND	Default setting = off	Default setting = 1ms
		0.750V, 0x41	Short to GND		
		0.875V, 0x42	Short to VIN		
		0.400V, 0x43	47kΩ to VIN		
TPS62872Z0WRXSR	12A	0.800V, 0x40	6.2kΩ to GND	Default setting = off	Default setting = 1ms
		0.750V, 0x41	Short to GND		
		0.875V, 0x42	Short to VIN		
		0.800V, 0x43	47kΩ to VIN		
TPS62872Z2WRXSR	12A	0.500V, 0x40	6.2kΩ to GND	Default setting = off	Default setting = 1ms
		0.750V, 0x41	Short to GND		
		0.875V, 0x42	Short to VIN		
		1.050V, 0x43	47kΩ to VIN		
TPS62872Z4WRXSR	12A	0.850V, 0x40	6.2kΩ to GND	Default setting = off	Default setting = 1ms
		0.750V, 0x41	Short to GND		
		0.875V, 0x42	Short to VIN		
		1.000V, 0x43	47kΩ to VIN		
TPS62871Z0WRXSR	9A	0.800V, 0x40	6.2kΩ to GND	Default setting = off	Default setting = 1ms
		0.750V, 0x41	Short to GND		
		0.875V, 0x42	Short to VIN		
		0.800V, 0x43	47kΩ to VIN		
TPS62871Z2WRXSR	9A	0.500V, 0x40	6.2kΩ to GND	Default setting = off	Default setting = 1ms
		0.750V, 0x41	Short to GND		
		0.875V, 0x42	Short to VIN		
		1.050V, 0x43	47kΩ to VIN		

Copyright © 2025 Texas Instruments Incorporated

DEVICE NUMBER	OUTPUT CURRENT	START-UP VOLTAGE AND I²C ADDRESS (1) (2) (3)	VSEL SETTING	SPREAD SPECTRUM CLOCKING	SOFT-START TIME
TPS62871Z4WRXSR	9A	0.850V, 0x40	6.2kΩ to GND	Default setting = off	Default setting = 1ms
		0.750V, 0x41	Short to GND		
		0.875V, 0x42	Short to VIN		
		1.000V, 0x43	47kΩ to VIN		
TPS62870Z0WRXSR	6A	0.800V, 0x40	6.2kΩ to GND	Default setting = off	Default setting = 1ms
		0.750V, 0x41	Short to GND		
		0.875V, 0x42	Short to VIN		
		0.800V, 0x43	47kΩ to VIN		
TPS62870Z4WRXSR	6A	0.850V, 0x40	6.2kΩ to GND	Default setting = off	Default setting = 1ms
		0.750V, 0x41	Short to GND		
		0.875V, 0x42	Short to VIN		
		1.000V, 0x43	47kΩ to VIN		
TPS62873Z6WRXSR	15A	0.500V, 0x40	6.2kΩ to GND	Default setting = off	Default setting = 1ms
		0.750V, 0x41	Short to GND		
		0.875V, 0x42	Short to VIN		
		0.500V, 0x43	47kΩ to VIN		

(1) The I²C address is linked to the selected start-up voltage. The user cannot select the start-up voltage and I²C address independently.
(2) The user can use the VSEL pin to select which of the four start-up voltages the device uses. For more information, see Table 7-5 and Table 7-10.
(3) Contact TI for other start-up voltage or I²C address options

Unless otherwise noted, device variants without I²C operate with the same default settings as device variants with I²C.

5 Pin Configuration and Functions

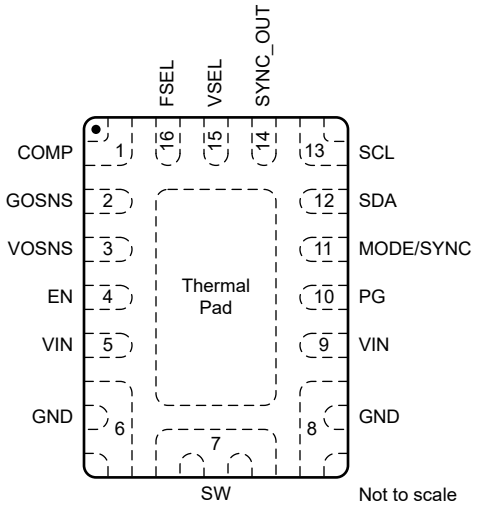

Figure 5-1. 16-Pin RXS VQFN Package (Top View)

Table 5-1. Pin Functions

PIN		TYPE[(1)]	DESCRIPTION
NAME	NO.		
COMP	1	—	Device compensation input. A resistor and capacitor from this pin to GOSNS define the compensation of the control loop. In stacked operation, connect the COMP pins of all stacked devices together and connect a resistor and capacitor between the common COMP node and GOSNS.
GOSNS	2	I	Output ground sense (differential output voltage sensing)
VOSNS	3	I	Output voltage sense (differential output voltage sensing)
EN	4	I	This is the enable pin of the device. The user must connect to this pin using a series resistor of at least 15kΩ. A low logic level on this pin disables the device and a high logic level on this pin enables the device. Do not leave this pin unconnected. For stacked operation, interconnect EN pins of all stacked devices with a resistor to the supply voltage or a GPIO of a processor. See Section 7.3.17 for a detailed description.
VIN	5, 9	P	Power supply input. Connect an input capacitor as close as possible between each VIN and GND (on both sides of the package)
GND	6, 8	GND	Ground pin
SW	7	O	This pin is the switch pin of the converter and is connected to the internal power MOSFETs.
PG	10	I/O	Open-drain power-good output. Low impedance when not "power good," high impedance when "power good." This pin can be left open or be tied to GND when not used in single device operation. In stacked operation, interconnect the PG pins of all stacked devices. Only the PG pin of the primary converter in stacked operation is an open-drain output. For devices that are defined as secondary converters in stacked mode, this pin is an input pin. See Section 7.3.17 for a detailed description.
MODE/SYNC	11	I	The device runs in power save mode when this pin is pulled low. If the pin is pulled high, the device runs in forced-PWM mode. Do not leave this pin unconnected. The mode pin can also be used to synchronize the device to an external clock.
SDA	12	I/O	I^2C serial data pin. Do not leave floating. Connect a pullup resistor to a logic high level. Connect to GND for secondary devices in stacked operation and for device variants without I^2C.
SCL	13	I	I^2C serial clock pin. Do not leave this pin floating. Connect a pullup resistor to a logic high level. Connect this pin to GND for secondary devices in stacked operation and for device variants without I^2C.

Copyright © 2025 Texas Instruments Incorporated

Table 5-1. Pin Functions (continued)

PIN		TYPE[(1)]	DESCRIPTION
NAME	NO.		
SYNC_OUT	14	O	Internal clock output pin for synchronization in stacked mode. Leave this pin floating for single device operation. Connect this pin to the MODE/SYNC pin of the next device in the daisy-chain in stacked operation. *Do not use this pin to connect to a non-TPS6287x device.* During start-up, this pin is used to identify if a device must operate as a secondary converter in stacked operation. Connect a 47kΩ resistor from this pin to GND to define a secondary converter in stacked operation. See Section 7.3.17 for a detailed description.
VSEL	15	—	Start-up output voltage select pin. A resistor or short circuit to GND or V_{IN} defines the selected output voltage. See Section 7.3.6.2.
FSEL	16	—	Frequency select pin. A resistor or a short circuit to GND or V_{IN} determines the free-running switching frequency. See Section 7.3.6.2.
Exposed Thermal Pad		—	The thermal pad must be soldered to GND to achieve an appropriate thermal resistance and for mechanical stability.

(1) I = input, O = output, P = power, GND = ground

6 Specifications

6.1 Absolute Maximum Ratings

over operating temperature range (unless otherwise noted)[1]

		MIN	MAX	UNIT
Voltage[2]	VIN[4]	–0.3	6.5	V
	SW (DC)	–0.3	V_{IN} + 0.3	
	SW (AC, less than 10ns)[3]	–3	10	
	VOSNS	–0.3	3.8	
	SCL, SDA	–0.3	5.5	
	FSEL, VSEL, EN, MODE/SYNC, PG	–0.3	6.5	
	GOSNS	–0.3	0.3	
	COMP	–0.3	V_{IN}	
Current	SYNC_OUT	–1	1	mA
	COMP	–1	1	
	PG		5	
	SDA		9	
	EN		1	
T_J	Junction temperature	–40	150	°C
T_{stg}	Storage temperature	–65	150	°C

(1) Operation outside the Absolute Maximum Ratings may cause permanent device damage. Absolute Maximum Ratings do not imply functional operation of the device at these or any other conditions beyond those listed under Recommended Operating Conditions. If used outside the Recommended Operating Conditions but within the Absolute Maximum Ratings, the device may not be fully functional, and this may affect device reliability, functionality, performance, and shorten the device lifetime.
(2) All voltage values are with respect to the GND pin.
(3) While switching.
(4) The voltage at the pin can exceed the 6.5V absolute max condition for a short period of time, but must remain less than 8V. VIN at 8V for a 100ms duration is equivalent to approximately 8 hours of aging for the device at room temperature.

6.2 ESD Ratings

			VALUE	UNIT
$V_{(ESD)}$	Electrostatic discharge	Human body model (HBM), per ANSI/ESDA/JEDEC JS-001[1]	±2000	V
		Charged device model (CDM), per ANSI/ESDA/JEDEC JS-002[2]	±750	

(1) JEDEC document JEP155 states that 500V HBM allows safe manufacturing with a standard ESD control process.
(2) JEDEC document JEP157 states that 250V CDM allows safe manufacturing with a standard ESD control process.

6.3 Recommended Operating Conditions

Over operating temperature range (unless otherwise noted)

			MIN	NOM	MAX	UNIT
V_{IN}	Input voltage	VIN	2.7		6	V
		SDA, SCL			5	
V_{OUT}	Output voltage		0.4		3.35V or (V_{IN} - 1.4V)[1]	V
I_{OUT}	Output current	TPS62870			6	A
		TPS62871			9	
		TPS62872			12	
		TPS62873			15	

Copyright © 2025 Texas Instruments Incorporated

6.3 Recommended Operating Conditions (continued)

Over operating temperature range (unless otherwise noted)

			MIN	NOM	MAX	UNIT
L	Inductance		110		330	nH
		f_{SW} ≥ 2.25MHz and V_{OUT} ≤ 1.675V	55		330	
C_{IN}	Input capacitance (per pin)(2)	VIN	5	10		µF
C_{OUT}	Output capacitance(2)		40		(3)	
C_{PAR}	Parasitic capacitance	VSEL, FSEL			100	pF
		SYNC_OUT			20	
	Resistor tolerance	VSEL, FSEL			±2%	
T_J	Operating junction temperature		–40		125	°C

(1) Whichever value is lower.
(2) *Effective* capacitance.
(3) The maximum recommended output capacitance depends on the specific operating conditions of an application. Output capacitance values up to a few millifarad are typically possible, however.

6.4 Thermal Information

THERMAL METRIC(1)		TPS6287x		UNIT
		RXS (JEDEC)	RXS (EVM)	
		16 PINS	16 PINS	
$R_{\theta JA}$	Junction-to-ambient thermal resistance	43.2	28	°C/W
$R_{\theta JC(top)}$	Junction-to-case (top) thermal resistance	19.2	N/A	°C/W
$R_{\theta JB}$	Junction-to-board thermal resistance	7.7	N/A	°C/W
Ψ_{JT}	Junction-to-top characterization parameter	0.5	1.5	°C/W
Ψ_{JB}	Junction-to-board characterization parameter	7.7	9.3	°C/W
$R_{\theta JC(bot)}$	Junction-to-case (bottom) thermal resistance	6.3	N/A	°C/W

(1) For more information about traditional and new thermal metrics, see the *Semiconductor and IC Package Thermal Metrics* application note.

6.5 Electrical Characteristics

over operating junction temperature (T_J = –40°C to 125°C) and V_{IN} = 2.7V to 6V. Typical values at V_{IN} = 3.3V and T_J = 25°C (unless otherwise noted).

PARAMETER			TEST CONDITIONS	MIN	TYP	MAX	UNIT
SUPPLY							
I_Q	Supply current (VIN)	Operating	EN = high, I_{OUT} = 0mA, $V_{(SW)}$ = 0V, primary operation, device not switching, T_J = 25°C		1.75	3	mA
		Standby	EN = low, $V_{(SW)}$ = 0V, T_J = 25°C		16.5	40	µA
V_{IT+}	Positive-going UVLO threshold voltage (VIN)			2.5	2.6	2.7	V
V_{IT-}	Negative-going UVLO threshold voltage (VIN)			2.4	2.5	2.6	V
V_{hys}	UVLO hysteresis voltage (VIN)			90			mV
V_{IT+}	Positive-going OVLO threshold voltage (VIN)			6.1	6.3	6.5	V
V_{IT-}	Negative-going OVLO threshold voltage (VIN)			6.0	6.2	6.4	V
V_{hys}	OVLO hysteresis voltage (VIN)			85			mV

Copyright © 2025 Texas Instruments Incorporated

6.5 Electrical Characteristics (continued)

over operating junction temperature (T_J = –40°C to 125°C) and V_{IN} = 2.7V to 6V. Typical values at V_{IN} = 3.3V and T_J = 25°C (unless otherwise noted).

PARAMETER		TEST CONDITIONS	MIN	TYP	MAX	UNIT
V_{IT-}	Negative-going power-on reset threshold		1.4			V
T_{SD}	Thermal shutdown threshold temperature	T_J rising		170		°C
	Thermal shutdown hysteresis			20		°C
T_W	Thermal warning threshold temperature	T_J rising		150		°C
	Thermal warning hysteresis			20		°C
CONTROL and INTERFACE						
V_{IT+}	Positive-going input threshold voltage (EN)		0.97	1.0	1.03	V
V_{IT-}	Negative-going input threshold voltage (EN)		0.87	0.9	0.93	V
V_{hys}	Hysteresis voltage (EN)		95			mV
I_{IH}	High-level input current (EN)	V_{IH} = V_{IN}, internal pulldown resistor disabled			200	nA
I_{IL}	Low-level input current (EN)	V_{IL} = 0V, internal pulldown resistor disabled	–200			nA
V_{IH}	High-level input voltage (SDA, SCL, MODE/SYNC, VSEL, FSEL, SYNC_OUT)		0.8			V
V_{IL}	Low-level input voltage (SDA, SCL, MODE/SYNC, VSEL, FSEL, SYNC_OUT)				0.4	V
V_{OL}	Low-level output voltage (SDA)	I_{OL} = 3mA			0.4	V
		I_{OL} = 9mA			0.4	V
		I_{OL} = 5mA			0.2	V
I_{OH}	High-level output current (SDA, SCL)	V_{OH} = 3.3V			200	nA
I_{IL}	Low-level input current (MODE/SYNC)	V_{IL} = 0V	–150		150	nA
I_{IH}	High-level input current (MODE/SYNC)	V_{IH} = V_{IN}			3	µA
I_{IL}	Low-level input current (SYNC_OUT)	V_{IL} = 0V	–250			nA
I_{IH}	High-level input current (SYNC_OUT)	V_{IH} = 2V			150	nA
$C_{IN_SDA_SCL}$	Parasitic input capacitance on SDA and SCL pins			10		pF
$t_{d(EN)1}$	Enable delay time when EN tied to V_{IN}	Measured from when EN goes high to when device starts switching SR_{VIN} = 1V/µs		175	500	µs
$t_{d(EN)2}$	Enable delay time when V_{IN} already applied	Measured from when EN goes high to when device starts switching			100	µs
$t_{d(RAMP)}$	Output voltage ramp time	Measured from when device starts switching to rising edge of PG	0.35	0.5	0.65	ms
			0.7	1	1.3	ms
			1.4	2	2.6	ms
			2.8	4	5.2	ms
	Time to lock external frequency			50		µs
	Internal pullup resistance (VSEL, FSEL)		5.5		9	kΩ
	Internal pulldown resistance (VSEL, FSEL)		1.3		2.2	kΩ
V_{T+}	Positive-going power good threshold voltage (output undervoltage)		94	96	98	%V_{OUT}
V_{T-}	Negative-going power good threshold voltage (output undervoltage)		92	94	96	%V_{OUT}

Copyright © 2025 Texas Instruments Incorporated

6.5 Electrical Characteristics (continued)

over operating junction temperature (T_J = –40°C to 125°C) and V_{IN} = 2.7V to 6V. Typical values at V_{IN} = 3.3V and T_J = 25°C (unless otherwise noted).

PARAMETER			TEST CONDITIONS	MIN	TYP	MAX	UNIT
V_{T+}	Positive-going power good threshold voltage (output overvoltage)			104	106	108	$\%V_{OUT}$
V_{T-}	Negative-going power good threshold voltage (output overvoltage)			102	104	106	$\%V_{OUT}$
V_{OL}	Low-level output voltage (PG)		I_{OL} = 1mA			0.3	V
I_{OH}	High-level output current (PG)		V_{OH} = 3.3V			200	nA
V_{IH}	High-level input voltage (PG)		Device configured as a secondary device in stacked operation	0.8			V
V_{IL}	Low-level input voltage (PG)		Device configured as a secondary device in stacked operation			0.4	V
I_{IH}	High-level input current (PG)		Device configured as a secondary device in stacked operation			1	µA
I_{IL}	Low-level input current (PG)		Device configured as a secondary device in stacked operation	–1			µA
$t_{d(PG)}$	Deglitch time (PG)		High-to-low or low-to-high transition on the PG pin	34	40	46	µs
OUTPUT							
V_{OUT}	Output accuracy		$V_{IN} \geq V_{OUT}$ + 1.4V	–1		1	%
I_{IB}	Input bias current (GOSNS)		$V_{(GOSNS)}$ = –100mV to 100mV	–6			µA
I_{IB}	Input bias current (VOSNS)		$V_{(VOSNS)}$ = 3.3V, V_{IN} = 6V			6	µA
V_{ICR}	Input common-mode range (GOSNS)			–100		100	mV
	Output discharge current in constant current mode		$V_{(VOSNS)}$ = 2V	50	115	200	mA
R_{DIS}	Output discharge resistance in resistive discharge mode		$V_{(VOSNS)} \leq$ 0.5V			6	Ω
f_{SW}	Switching frequency (SW)		f_{SW} = 1.5MHz, PWM operation, V_{IN} 3.3V, V_{OUT} = 0.75V	1.35	1.5	1.65	MHz
			f_{SW} = 2.25MHz, PWM operation, V_{IN} 3.3V, V_{OUT} = 0.75V	2.025	2.25	2.475	
			f_{SW} = 2.5MHz, PWM operation, V_{IN} 3.3V, V_{OUT} = 0.75V	2.25	2.5	2.75	
			f_{SW} = 3MHz, PWM operation, V_{IN} 3.3V, V_{OUT} = 0.75V	2.7	3	3.3	
f_{mod}	Frequency of the spread-spectrum sweep				f_{sw}/2048		kHz
Δf_{SW}	Switching frequency variation during spread-spectrum operation				±10%		
τ	Emulated current time constant				12.5		µs
$r_{DS(on)}$	High-side FET static on-state resistance		V_{IN} = 3.3V		7	16	mΩ
$r_{DS(on)}$	Low-side FET static on-state resistance		V_{IN} = 3.3V		4.1	9.4	mΩ
$I_{(SW)(off)}$	High-side FET off-state current		V_{IN} = 6V, $V_{(SW)}$ = 0V, T_J = 25°C	–1			µA
	Low-side FET off-state current		V_{IN} = 6V, $V_{(SW)}$ = 6V, T_J = 25°C			100	
I_{LIM}	High-side FET forward switch current limit, DC	TPS62870		9	12	14	A
		TPS62871		12	16	18	
		TPS62872		15	20	22	
		TPS62873		18	24	26	
	Low-side FET negative current limit, DC			7.5		12	A

6.6 I²C Interface Timing Characteristics

PARAMETER		TEST CONDITIONS	MIN	TYP	MAX	UNIT
f_{SCL}	SCL clock frequency	Standard mode			100	kHz
		Fast mode			400	
		Fast mode plus			1000	
$t_{HD;}$ t_{STA}	Hold time (repeated) START condition	Standard mode	4			µs
		Fast mode	0.6			
		Fast mode plus	0.26			
t_{LOW}	LOW period of the SCL clock	Standard mode	4.7			µs
		Fast mode	1.3			
		Fast mode plus	0.5			
t_{HIGH}	HIGH period of the SCL clock	Standard mode	4			µs
		Fast mode	0.6			
		Fast mode plus	0.26			
$t_{SU;}$ t_{STA}	Setup time for a repeated START condition	Standard mode	4.7			µs
		Fast mode	0.6			
		Fast mode plus	0.26			
$t_{HD;}$ t_{DAT}	Data hold time	Standard mode	0		3.45	µs
		Fast mode	0		0.9	
		Fast mode plus	0			
$t_{SU;}$ t_{DAT}	Data setup time	Standard mode	250			ns
		Fast mode	100			
		Fast mode plus	50			
t_r	Rise time of both SDA and SCL signals	Standard mode			1000	ns
		Fast mode	20		300	
		Fast mode plus			120	
t_f	Fall time of both SDA and SCL signals	Standard mode			300	ns
		Fast mode	$20 \times V_{DD}/5.5V$ (1)		300	
		Fast mode plus	$20 \times V_{DD}/5.5V$ (1)		120	
$t_{SU;}$ t_{STO}	Setup time for STOP condition	Standard mode	4			µs
		Fast mode	0.6			
		Fast mode plus	0.26			
t_{BUF}	Bus free time between a STOP and START condition	Standard mode	4.7			µs
		Fast mode	1.3			
		Fast mode plus	0.5			
C_b	Capacitive load for each bus line	Standard mode			400	pF
		Fast mode			400	
		Fast mode plus			550	

(1) VDD is the pullup voltage of SDA and SCL

6.7 Timing Requirements

			MIN	NOM	MAX	UNIT
$f_{(SYNC)}$	Synchronization clock frequency range (MODE/SYNC)	Nominal f_{SW} = 1.5MHz	1.3		2.0	MHz

Copyright © 2025 Texas Instruments Incorporated

6.7 Timing Requirements (continued)

			MIN	NOM	MAX	UNIT
$f_{(SYNC)}$	Synchronization clock frequency range (MODE/SYNC)	Nominal f_{SW} = 2.25MHz	1.8		2.7	MHz
$f_{(SYNC)}$	Synchronization clock frequency range (MODE/SYNC)	Nominal f_{SW} = 2.5MHz	2.0		3.0	MHz
$f_{(SYNC)}$	Synchronization clock frequency range (MODE/SYNC)	Nominal f_{SW} = 3.0MHz	2.5		3.3	MHz
$D_{(SYNC)}$	Synchronization clock duty cycle range (MODE/SYNC)		45%		55%	

Copyright © 2025 Texas Instruments Incorporated

6.8 Typical Characteristics

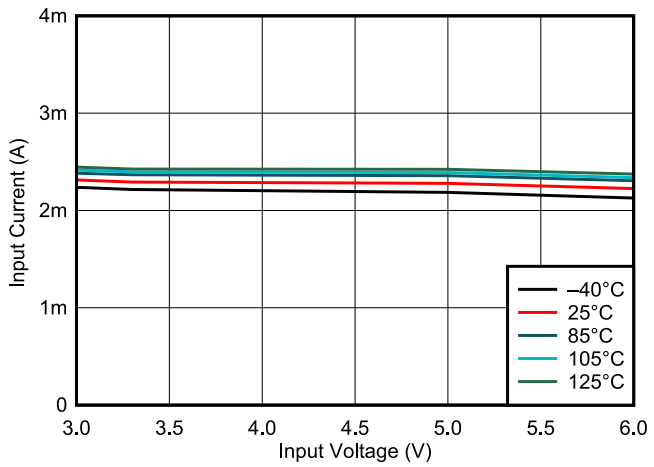

V_{OUT} = 0.75V MODE = Low

Figure 6-1. Operating Supply Current (Power Save Mode)

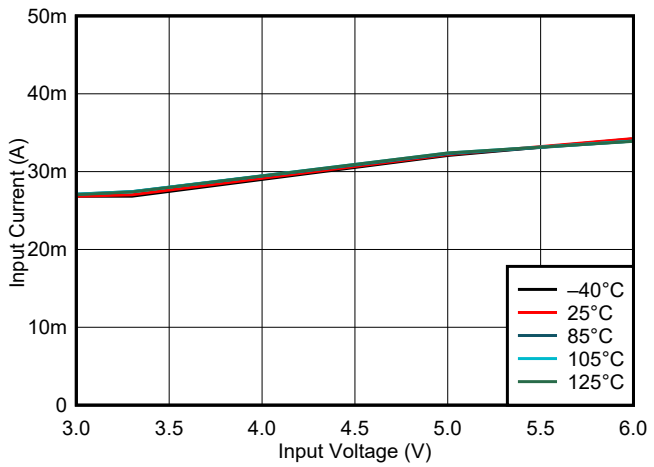

V_{OUT} = 0.75V MODE = High

Figure 6-2. Operating Supply Current (Forced PWM)

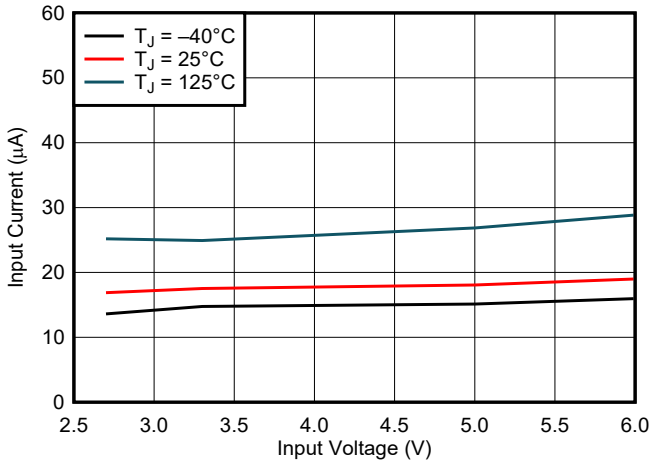

ENABLE = Low

Figure 6-3. Quiescent Supply Current

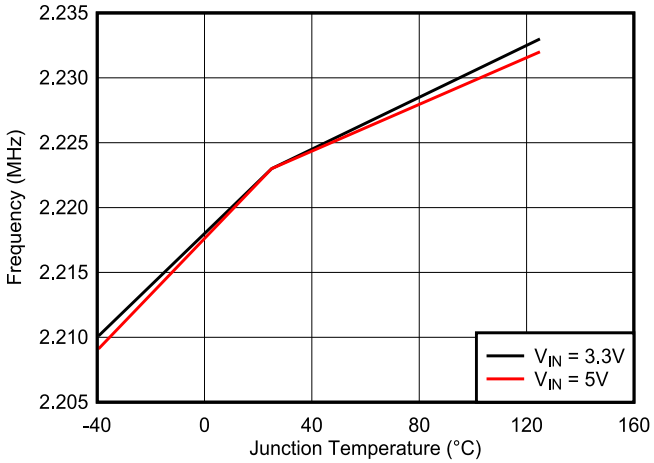

Figure 6-4. Switching Frequency vs Temperature

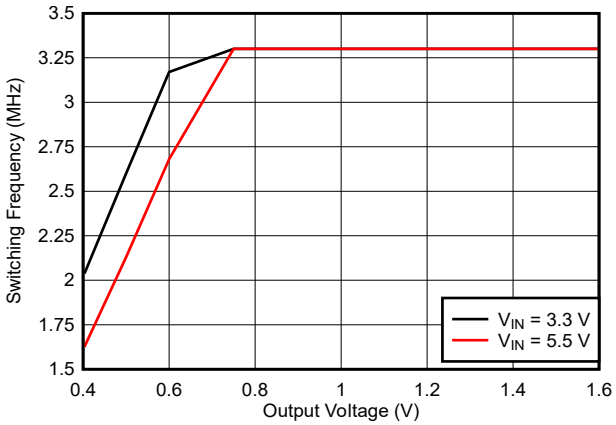

Figure 6-5. Maximum Switching Frequency vs V_{IN} and V_{OUT}

Copyright © 2025 Texas Instruments Incorporated

7 Detailed Description

7.1 Overview

The TPS6287x devices are synchronous step-down (buck) DC/DC converters. These devices use a fixed-frequency DCS-Control topology to achieve a fast transient response. Together, with the low output voltage ripple, high DC accuracy, and differential remote sensing, these devices are an excellent choice for supplying the cores of modern high-performance processors.

The family of devices includes 6A, 9A, 12A, and 15A devices. To further increase the output current capability, the user can combine multiple devices in a “stack”. For example, a stack of two TPS62873 devices have a current capability of 30A. Each device of a stack must have the same current rating to avoid that one device enters current limit too early.

For each current rating, there are full-featured devices with an I^2C interface and limited-featured devices without an I^2C interface (see the *Device Options*). The user can use a device variant without I^2C in exactly the same way as a device variant with I^2C, except that:

- The user must connect the unused SCL and SDA pins to GND.
- The user must be aware of the (fixed) factory settings for parameters and functions that are programmable in the I^2C device variants.

7.2 Functional Block Diagram

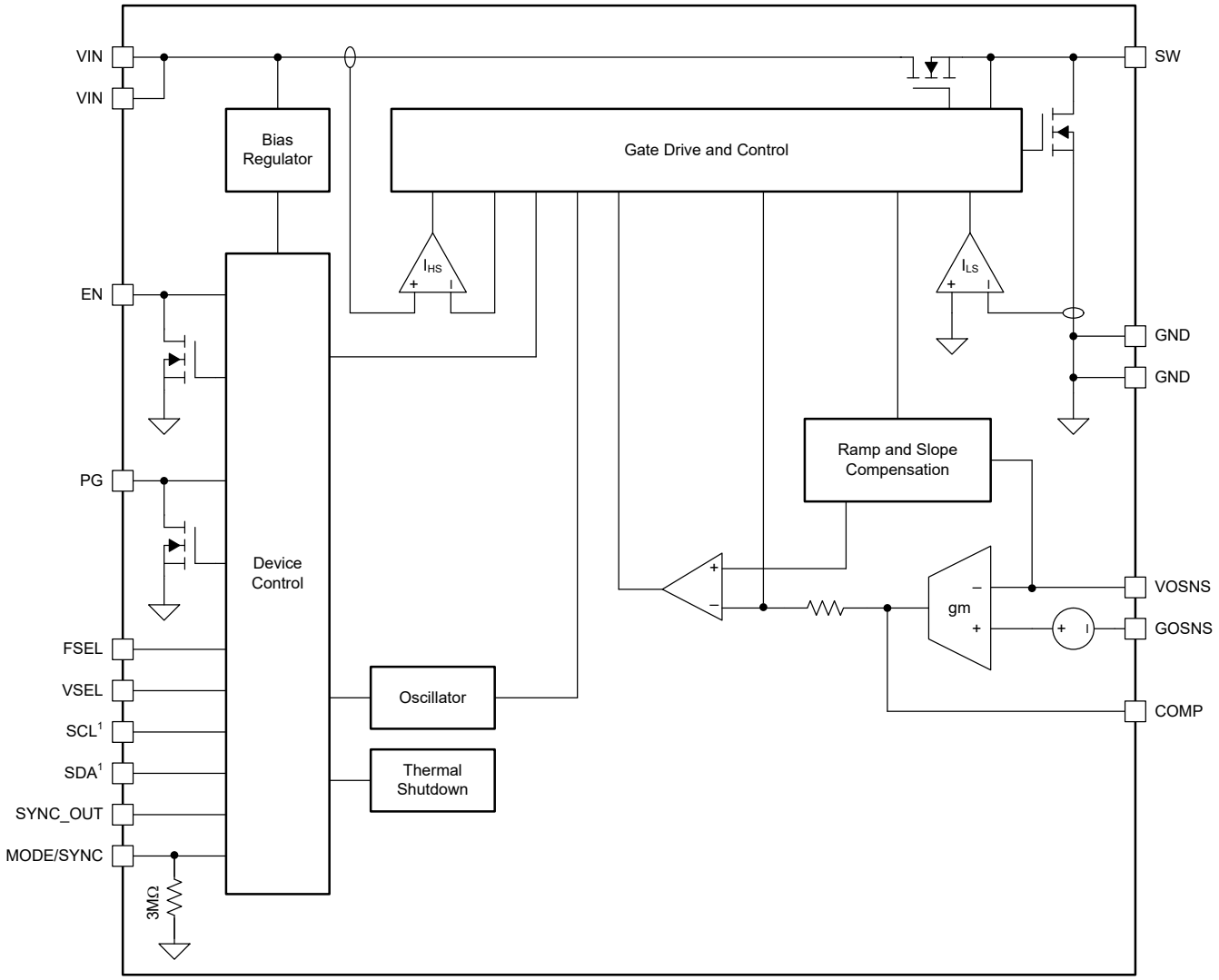

1. In device variants without I²C the SDA and SCL pins are internally connected, but the functionality of these pins is deactivated.

7.3 Feature Description

7.3.1 Fixed-Frequency DCS-Control Topology

Figure 7-1 shows a simplified block diagram of the fixed-frequency DCS-Control topology used in the TPS6287x devices. This topology is comprised of an inner emulated current loop, a middle direct feedback loop, and an outer voltage-regulating loop. More details on this topology can be found in SLYT846.

Copyright © 2025 Texas Instruments Incorporated

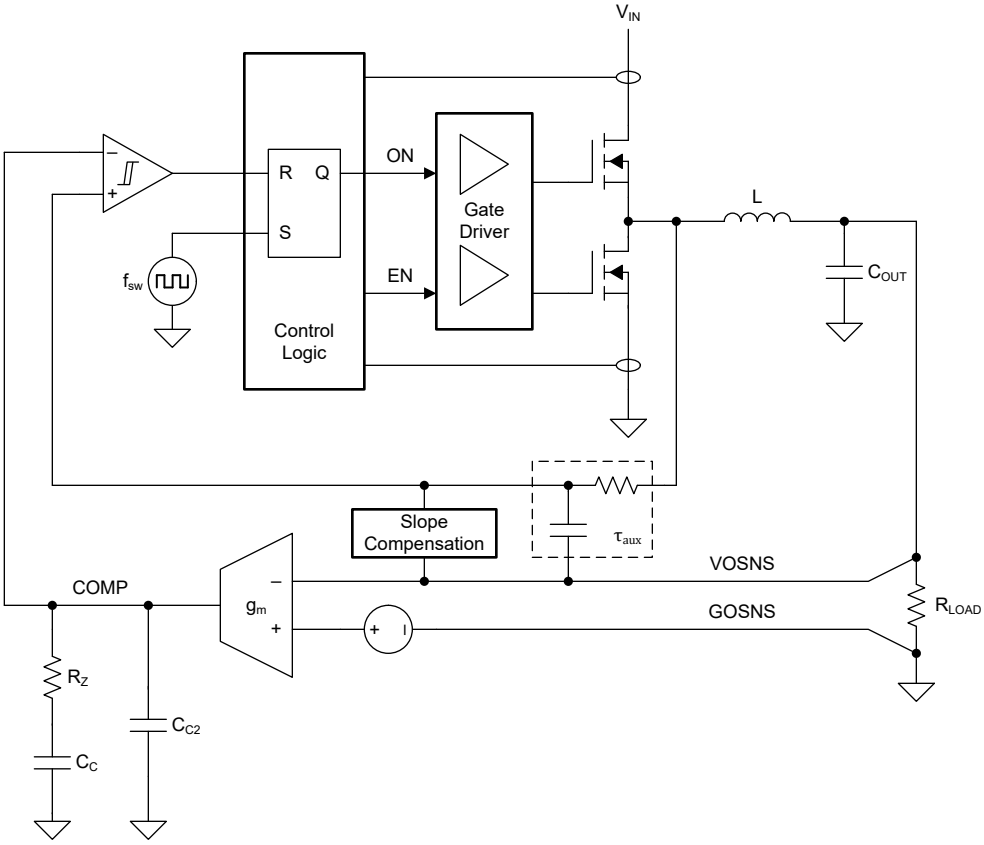

Figure 7-1. Fixed-Frequency DCS-Control Topology (Simplified)

7.3.2 Forced PWM and Power Save Modes

The device can control the inductor current in three different ways to regulate the output:

- Pulse-width modulation with continuous inductor current (PWM-CCM)
- Pulse-width modulation with discontinuous inductor current (PWM-DCM)
- Pulse-frequency modulation with discontinuous inductor current and pulse skipping (PFM-DCM)

The on-time in PWM-CCM is set by Equation 1. For very small output voltages, a minimum on time ($t_{on,\ min}$) of approximately 50ns reduces the switching frequency from the set value. Even when the minimum on-time is reached, the device maintains proper output voltage regulation by extending the off-time.

$$t_{ON} = \frac{V_{OUT}}{V_{IN} \times f_{SW}} \tag{1}$$

During PWM-CCM operation, the device switches at a constant frequency and the inductor current is continuous (see Figure 7-2). PWM operation achieves the lowest output voltage ripple and the best transient performance.

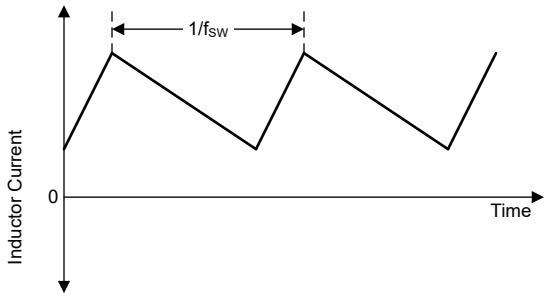

Figure 7-2. Continuous Conduction Mode (PWM-CCM) Current Waveform

During PWM-DCM operation, the device switches at a constant frequency and the inductor current is discontinuous (see Figure 7-3). In this mode, the device controls the peak inductor current to maintain the selected switching frequency while still being able to regulate the output.

Use Equation 2 to calculate the output current threshold at which the device enters PWM-DCM.

$$I_{OUT(CCM-DCM)} = \frac{(V_{IN} - V_{OUT})}{2L} t_{ON} \tag{2}$$

with t_{ON} according Equation 1.

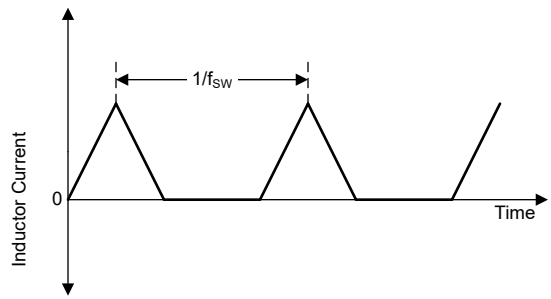

Figure 7-3. Discontinuous Conduction Mode (PWM-DCM) Current Waveform

During PFM-DCM operation, the device keeps the peak inductor current constant (at a level corresponding to the minimum on time of the converter) and skips pulses to regulate the output (see Figure 7-4). The switching pulses that occur during PFM-DCM operation are synchronized to the internal clock.

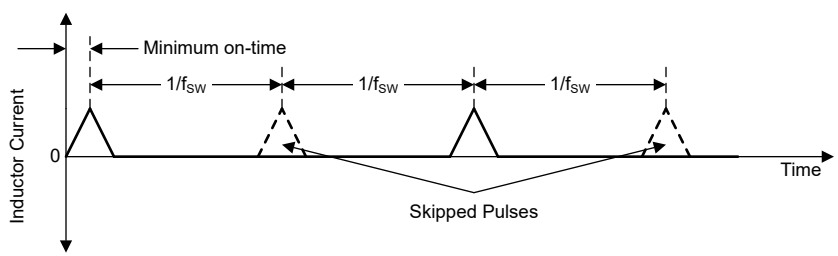

Figure 7-4. Discontinuous Conduction Mode (PFM-DCM) Current Waveform

Use Equation 3 to calculate the output current threshold at which the device changes from PWM-DCM to PFM-DCM:

$$I_{OUT(PFM-DCM)} = \frac{V_{IN} \times t_{ON_min_PFM}}{2} \times \frac{1 - \frac{V_{OUT}}{V_{IN}}}{L} \tag{3}$$

with $t_{ON_min_PFM}$ being the minimum on time in PFM-DCM of approximately 20ns.

Figure 7-5 shows how this threshold typically varies with V_{IN} and V_{OUT} for a switching frequency of 2.25MHz.

Copyright © 2025 Texas Instruments Incorporated

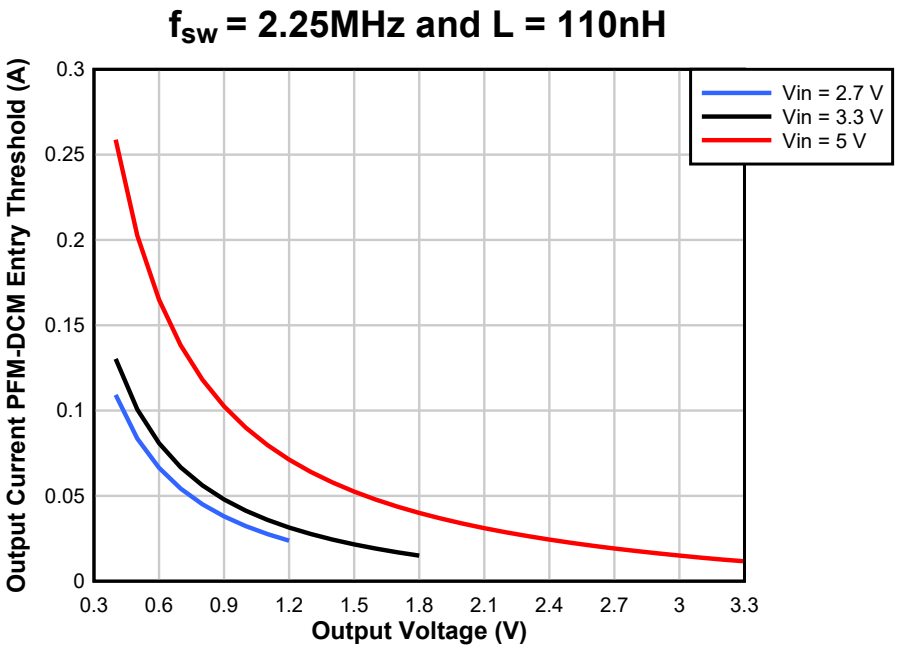

Figure 7-5. Output Current PFM-DCM Entry Threshold

The user can configure the device to use either forced PWM (FPWM) mode or power save mode (PSM):

- In forced PWM mode, the device uses PWM-CCM at all times.
- In power save mode, the device uses PWM-CCM at medium and high loads, PWM-DCM at low loads, and PFM-DCM at very low loads. The transition between the different operating modes is seamless.

Table 7-1 shows the function table of the MODE/SYNC pin and the FPWMEN bit in the CONTROL1 register, which control the operating mode of the device.

Table 7-1. FPWM Mode and Power-Save Mode Selection

MODE/SYNC PIN	FPWMEN BIT	OPERATING MODE	REMARK
Low	0	PSM	Do not use in a stacked configuration.
	1	FPWM	
High	X	FPWM	
Sync Clock	X	FPWM	

7.3.3 Precise Enable

The Enable (EN) pin is bidirectional and has two functions:

- As an input, EN enables and disables the DC/DC converter in the device.
- As an output, EN provides a SYSTEM_READY signal to other devices in a stacked configuration.

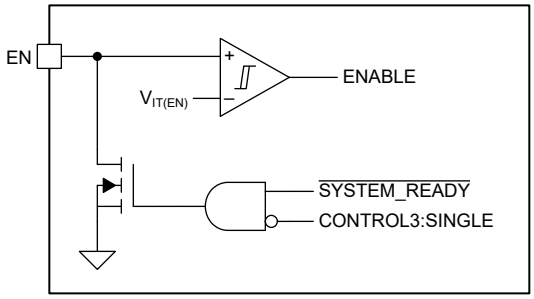

Figure 7-6. Enable Functional Block Diagram

Because there is an internal open-drain transistor connected to the EN pin, do not drive this pin directly from a low-impedance source. Instead, use a resistor to limit the current flowing into the EN pin (see Section 9).

When power is first applied to the VIN pin, the device pulls the EN pin low until the device has loaded the default register settings from nonvolatile memory and read the state of the VSEL, FSEL, and SYNC_OUT pins. The device also pulls EN low if a fault, such as thermal shutdown or overvoltage lockout, occurs. In stacked configurations, all devices share a common enable signal, which means that the DC/DC converters in the stack cannot start to switch until *all* devices in the stack have completed the initialization. Similarly, a fault in one or more devices in the stack disables *all* converters in the stack (see Section 7.3.17).

In standalone (nonstacked) applications, the user can disable the active pulldown of the EN pin if the user sets SINGLE = 1 in the CONTROL3 register. Fault conditions have no effect on the EN pin when SINGLE = 1 (the EN pin is *always* pulled down during device initialization). In stacked applications, make sure that SINGLE = 0.

When the internal $\overline{\text{SYSTEM_READY}}$ signal is low (that is, initialization is complete and there are no fault conditions), the internal open-drain transistor is high impedance and the EN pin functions like a standard input. A high level on the EN pin enables the DC/DC converter in the device. A low level disables the DC/DC converter (the I^2C interface is enabled as soon as the device has completed the initialization and is not affected by the state of the internal ENABLE or $\overline{\text{SYSTEM_READY}}$ signals).

A low level on the EN pin forces the device into shutdown. During shutdown, the MOSFETs in the power stage are off, the internal control circuitry is disabled, and the device consumes only 20µA (typical).

The rising threshold voltage of the EN pin is 1.0V and the falling threshold voltage is 0.9V. The tolerance of the threshold voltages is ±30mV, which means that the user can use the EN pin to implement precise turn-on and turn-off behavior.

When power is applied to the VIN pin, the toggling of the EN pin does not reset the loaded default register settings.

7.3.4 Start-Up

When the voltage on the VIN pin exceeds the positive-going UVLO threshold, the device initializes as follows:

- The device pulls the EN pin low.
- The device enables the internal reference voltage.
- The device reads the state of the VSEL, FSEL, and SYNC_OUT pins.
- The device loads the default values into the device registers.

When initialization is complete, the device enables I^2C communication and releases the EN pin. The external circuitry controlling the EN pin now determines the behavior of the device:

- If the EN pin is low, the device is disabled. The user can write to and read from the device registers, but the DC/DC converter does not operate.
- If the EN pin is high, the device is enabled. The user can write to and read from the device registers and, after a short delay, the DC/DC converter starts to ramp up the output.

Figure 7-7 shows the start-up sequence when the EN pin is pulled up to V_{IN}.

Copyright © 2025 Texas Instruments Incorporated

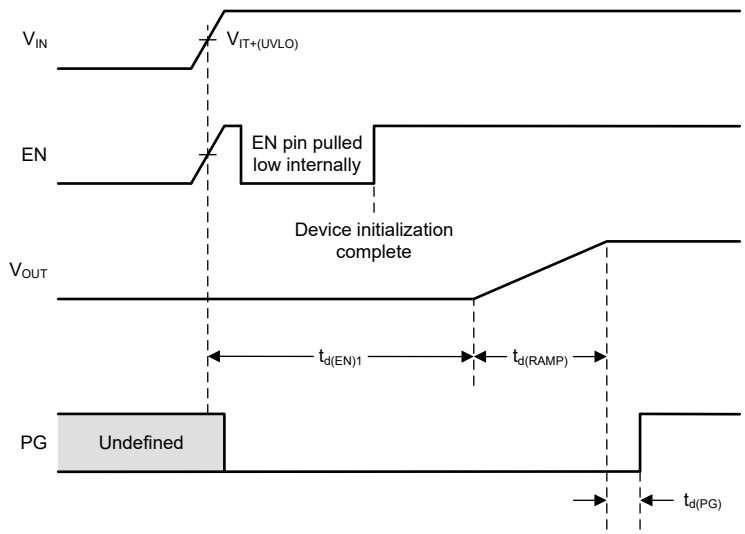

Figure 7-7. Start-Up Timing When EN is Pulled Up to V_{IN}

Figure 7-8 shows the start-up sequence when an external signal is connected to the EN pin.

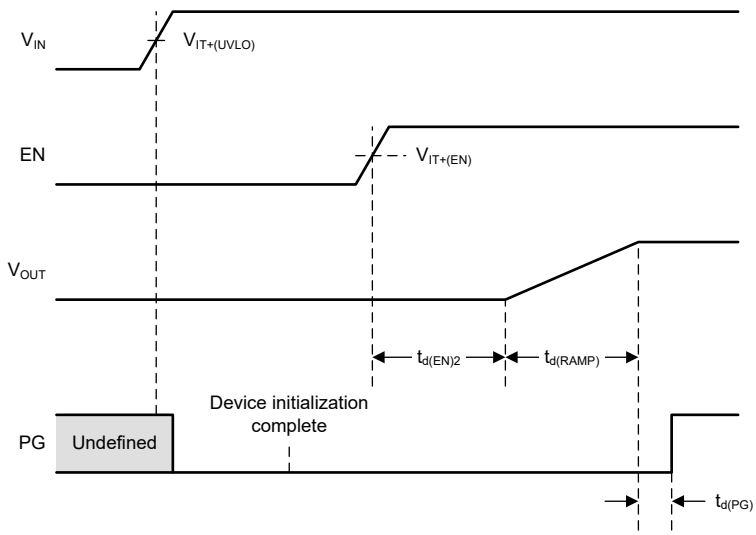

Figure 7-8. Start-Up Timing When an External Signal is Connected to the EN Pin

The SSTIME[1:0] bits in the CONTROL2 register select the duration of the soft-start ramp:

- $t_{d(RAMP)}$ = 500µs
- $t_{d(RAMP)}$ = 1ms (default)
- $t_{d(RAMP)}$ = 2ms
- $t_{d(RAMP)}$ = 4ms

The device ignores new values until the soft-start sequence is complete if the user programs the following when the device soft-start sequence has already started:

- A new output voltage setpoint (VSET[7:0])
- An output voltage range (VRANGE[1:0])
- Soft-start time (SSTIME[1:0]) settings

If the user change the value of VSET[7:0] during soft start, the device first ramps to the value that VSET[7:0] had when the soft-start sequence began. Then, when soft start is complete, the device ramps up or down to the new value.

The device can start up into a prebiased output. In this case, only a portion of the internal voltage ramp is seen externally (see Figure 7-9).

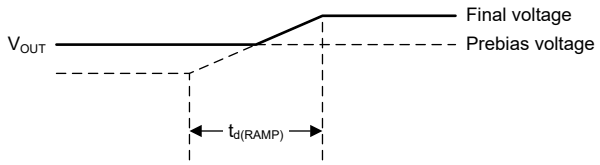

Figure 7-9. Start-Up into a Prebiased Output

Note that the device *always* operates in DCM during the start-up ramp, regardless of other configuration settings or operating conditions.

7.3.5 Switching Frequency Selection

During device initialization, a resistor-to-digital converter in the device determines the state of the FSEL pin and sets the switching frequency of the DC/DC converter according to Table 7-2.

Table 7-2. Switching Frequency Options

FSEL PIN[(1)]	SWITCHING FREQUENCY
Short to GND	1.5MHz
6.2kΩ to GND	2.25MHz
47kΩ to V_{IN}	2.5MHz
Short to V_{IN}	3MHz

(1) For a reliable voltage setting, make sure there is no stray current path connected to the FSEL pin and that the parasitic capacitance between the FSEL pin and GND is less than 100pF.

Figure 7-10 shows a simplified block diagram of the R2D converter used to detect the state of the FSEL pin (an identical circuit detects the state of the VSEL pin – see Section 7.3.6.2).

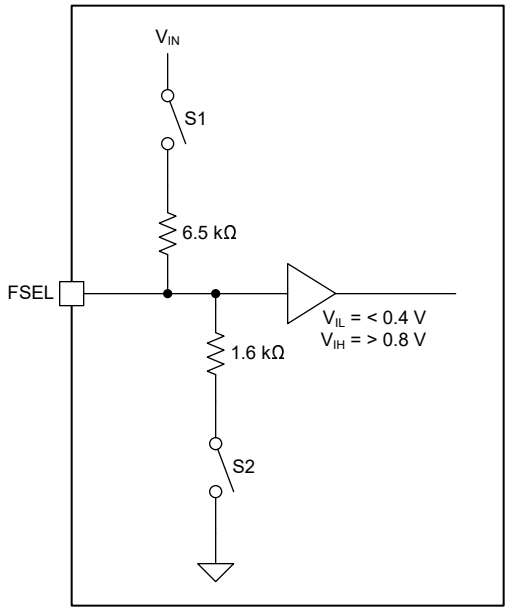

Figure 7-10. FSEL R2D Converter Functional Block Diagram

Detection of the state of the FSEL pin works as follows:

To detect the most significant bit (MSB), the circuit opens S1 and S2, and the input buffer detects if a high or a low level is connected to the FSEL pin.

Copyright © 2025 Texas Instruments Incorporated

To detect the least significant bit (LSB):

- If the MSB was 0, the circuit closes S1. If the input buffer detects a high level, LSB = 1. If the circuit detects a low level, LSB = 0.
- If the MSB was 1, the circuit closes S2. If the input buffer detects a low level, LSB = 0. If the circuit detects a high level, LSB = 1.

7.3.6 Output Voltage Setting

7.3.6.1 Output Voltage Range

The device has four different voltage ranges. The VRANGE[1:0] bits in the CONTROL2 register control which range is active (see Table 7-3). The default output voltage range after device initialization is 0.4V to 1.675V in 5mV steps.

Table 7-3. Voltage Ranges

VRANGE[1:0]	VOLTAGE RANGE
0b00	0.4V to 0.71875V in 1.25mV steps
0b01	0.4V to 1.0375V in 2.5mV steps
0b10	0.4V to 1.675V in 5mV steps
0b11	0.8V to 3.3V in 10mV steps

Note that every change to the VRANGE[1:0] bits must be followed by a write to the VSET register, even if the value of the VSET[7:0] bits does not change. This sequence is required for the device to start to use the new voltage range.

When changing to or from the 0.8V to 3.35V range, the device switches the internal reference between 0.4V and 0.8V. To avoid any output voltage over or undershoot that can occur during the change, the VRANGE change must be done at an output voltage that occurs in both the new range and old range and the VSET[7:0] bits must set the same output voltage in both the new range and old range.

For proper operation, the input voltage needs to be at least 1.4V above the selected output voltage.

In device variants that do not have I^2C, the output voltage range is factory-set to 0.4V to 1.675V.

7.3.6.2 Output Voltage Setpoint

Together with the selected range, the VSET[7:0] bits in the VSET register control the output voltage setpoint of the device (see Table 7-4).

Table 7-4. Start-Up Voltage Settings

VRANGE[1:0]	OUTPUT VOLTAGE SETPOINT
0b00	0.4V + VSET[7:0] × 1.25mV
0b01	0.4V + VSET[7:0] × 2.5mV
0b10	0.4V + VSET[7:0] × 5mV
0b11	0.8V + VSET[7:0] × 10mV

During initialization, the device reads the state of the VSEL pin and selects the default output voltage according to Table 7-5 . Note that the VSEL pin also selects the I^2C target address of the device (see Table 7-10).

Table 7-5. Default Output Voltage Setpoints

VSEL PIN[(1)]	DEVICE NUMBER	VSET[7:0]	OUTPUT VOLTAGE SETPOINT
6.2 kΩ to GND	TPS6287xZ0	0x50	800mV
	TPS6287xZ1	0x28	600mV
	TPS6287xZ2	0x14	500mV
	TPS6287xZ4	0x5A	850mV
	TPS6287xZ5	0x00	400mV

Table 7-5. Default Output Voltage Setpoints (continued)

VSEL PIN[(1)]	DEVICE NUMBER	VSET[7:0]	OUTPUT VOLTAGE SETPOINT
Short Circuit to GND	All	0x46	750mV
Short Circuit to V_{IN}	All	0x5F	875mV
47 kΩ to V_{IN}	TPS6287xZ0	0x50	800mV
	TPS6287xZ1	0x64	900mV
	TPS6287xZ2	0x82	1050mV
	TPS6287xZ4	0x78	1000mV
	TPS6287xZ5	0x00	400mV

(1) For a reliable voltage setting, make sure there is no stray current path connected to the VSEL pin and that the parasitic capacitance between the VSEL pin and GND is less than 100pF.

If the user programs new output voltage setpoint (VSET[7:0]), output voltage range (VRANGE[1:0]), or soft-start time (SSTIME[1:0]) settings when the device has already begun the soft-start sequence, the device ignores the new values until the soft-start sequence is complete. If the user changes the value of VSET[7:0] during soft start, the device first ramps to the value that VSET[7:0] had when the soft-start sequence began. Then, when soft start is complete, ramps up or down to the new value.

If the user changes VSET[7:0], VRAMP[1:0], or SSTIME[1:0] while EN is low, the device uses the new values the next time the user enables the device.

During start-up, the output voltage ramps up to the target value set by the VSEL pin before ramping up or down to any new value programmed to the device over the I^2C interface.

7.3.6.3 Non-Default Output Voltage Setpoint

If none of the default voltage range or voltage setpoint combinations are suitable for the application, the user can change these device settings through I^2C before the user enables the device. Then, when the user pulls the EN pin high, the device starts up with the desired start-up voltage.

Note that if the user changes the device settings through I^2C *while the device is ramping*, the device ignores the changes until the ramp is complete.

7.3.6.4 Dynamic Voltage Scaling

If the user changes the output voltage setpoint while the DC/DC converter is operating, the device ramps up or down to the new voltage setting in a controlled way.

The VRAMP[1:0] bits in the CONTROL1 register sets the slew rate when the device ramps from one voltage to another during DVS (see Table 7-6).

Table 7-6. Dynamic Voltage Scaling Slew Rate

VRAMP[1:0]	DVS Slew Rate
0b00	10mV/µs (0.5µs/step)
0b01	5mV/µs (1µs/step)
0b10	1.25mV/µs (5µs/step)
0b11	0.5mV/µs (10µs/step)

Note that ramping the output to a higher voltage requires additional output current, so that during DVS, the converter must generate a total output current given by:

$$I_{OUT} = I_{OUT(DC)} + C_{OUT}\frac{dV_{OUT}}{dt} \quad (4)$$

where

- I_{OUT} is the total current the converter must generate while ramping to a higher voltage.

Copyright © 2025 Texas Instruments Incorporated

- $I_{OUT(DC)}$ is the DC load current.
- C_{OUT} is the total output capacitance.
- dV_{OUT}/dt is the slew rate of the output voltage (programmable in the range 0.5mV/µs to 10mV/µs).

For correct operation, make sure that the total output current during DVS does not exceed the current limit of the device.

7.3.7 Compensation (COMP)

The COMP pin is the connection point for an external compensation network. A series-connected resistor and capacitor to GOSNS is sufficient for typical applications. The series-connected resistor also provides enough scope to optimize the loop response for a wide range of operating conditions.

When using multiple devices in a stacked configuration, all devices share a common compensation network, and the COMP pin makes sure there is equal current sharing between them (see Section 7.3.17).

7.3.8 Mode Selection and Clock Synchronization (MODE/SYNC)

A high level on the MODE/SYNC pin selects forced PWM operation. A low level on the MODE/SYNC pin selects power save operation, in which, the device automatically transitions between PWM and PFM, according to the load conditions.

If the user applies a valid clock signal to the MODE/SYNC pin, the device synchronizes the switching cycles to the external clock and automatically selects forced PWM operation.

The MODE/SYNC pin is logically ORed with the FPWMEN bit in the CONTROL1 register (see Table 7-1).

When multiple devices are used together in a stacked configuration, the MODE/SYNC pin of the secondary devices is the input for the clock signal (see Section 7.3.17).

7.3.9 Spread Spectrum Clocking (SSC)

The device has a spread spectrum clocking function that can reduce electromagnetic interference (EMI). When the SSC function is active, the device modulates the switching frequency to approximately ±10% the nominal value. The frequency modulation has a triangular characteristic (see Figure 7-11).

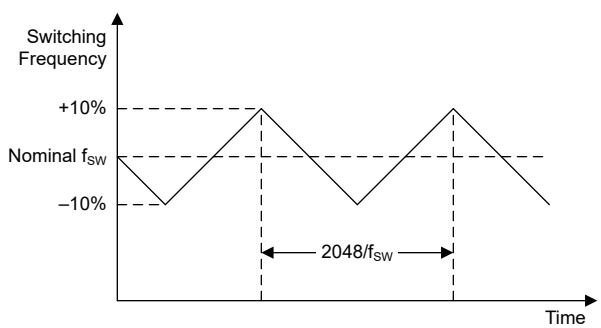

Figure 7-11. Spread Spectrum Clocking Behavior

To use the SSC function, make sure that:

- SSCEN = 1 in the CONTROL1 register.
- The device is not synchronized to an external clock.

TI recommends to use FPWM operation when using SSC, but SSC is available with PSM operation. To disable the SSC function, make sure that SCCEN = 0 in the CONTROL1 register.

To use the SSC function with multiple devices in a stacked configuration, make sure that the primary converter runs from the internal oscillator and synchronize all secondary converters to the primary clock (see Figure 7-15).

7.3.10 Output Discharge

The device has an output discharge function that makes sure of a defined ramp down of the output voltage when the device is disabled and keeps the output voltage close to 0V while the device is off. The output discharge function is enabled when DISCHEN = 1 in the CONTROL1 register. The output discharge function is enabled by default.

If enabled, the device discharges the output under the following conditions:

- A low level is applied to the EN pin.
- SWEN = 0 in the CONTROL1 register.
- A thermal shutdown event occurs.
- A UVLO event occurs.
- An OVLO event occurs.

The output discharge function is not available until the user has enabled the device at least once after power up. During power down, the device continues to discharge the output for as long as the internal supply voltage is greater than approximately 1.8V.

7.3.11 Undervoltage Lockout (UVLO)

The device has an undervoltage lockout function that disables the device if the supply voltage is too low for correct operation. The negative-going threshold of the UVLO function is 2.5V (typical). If the supply voltage decreases below this value, the device stops switching and, if DISCHEN = 1 in the CONTROL1 register, turns on the output discharge. In addition, the EN pin is pulled low, which disables all other devices in the stack. The device automatically starts switching again and begins a new soft-start sequence when the supply voltage is higher than 2.6V (typical).

7.3.12 Overvoltage Lockout (OVLO)

The device has an overvoltage lockout function that disables the DC/DC converter if the supply voltage is too high for correct operation. The positive-going threshold of the OVLO function is 6.3V (typical). If the supply voltage increases above this value, the device stops switching and, if DISCHEN = 1 in the CONTROL1 register, turns on the output discharge.

The device automatically starts switching again – the device begins a new soft-start sequence – when the supply voltage falls below 6.2V (typical).

7.3.13 Overcurrent Protection

7.3.13.1 Cycle-by-Cycle Current Limiting

If the peak inductor current increases above the high-side current limit threshold, the device turns off the high-side switch and turns on the low-side switch to ramp down the inductor current. The device only turns on the high-side switch again if the inductor current has decreased below the low-side current limit threshold.

Note that because of the propagation delay of the current limit comparator, the current limit threshold in practice can be greater than the DC value specified in the *Electrical Characteristics*. The current limit in practice is given by:

$$I_L = I_{LIMH} + \left(\frac{V_{IN} - V_{OUT}}{L}\right) \times t_{pd} \quad (5)$$

where:

- I_L is the inductor current.
- I_{LIMH} is the high-side current limit threshold measured at DC.
- V_{IN} is the input voltage.
- V_{OUT} is the output voltage.
- L is the effective inductance at the peak current level.
- t_{pd} is the propagation delay of the current limit comparator (typically 50ns).

Copyright © 2025 Texas Instruments Incorporated

7.3.13.2 Hiccup Mode

To enable hiccup operation, make sure that HICCUPEN = 1 in the CONTROL1 register.

If hiccup operation is enabled and the high-side switch current exceeds the current limit threshold on 32 consecutive switching cycles, the device:

- Stops switching for 128µs, after which the device automatically starts switching again (the device starts a new soft-start sequence).
- Sets the HICCUP bit in the STATUS register.
- Pulls the PG pin low. The PG pin stays low until the overload condition goes away and the device can start up correctly and regulate the output voltage. Note that power-good function has a deglitch circuit, which delays the rising edge of the power-good signal by 40µs (typical).

Hiccup operation continues in a repeating sequence of 32 cycles in current limit, followed by a pause of 128µs, followed by a soft-start attempt for as long as the output overload condition exists.

The device clears the HICCUP bit if the user reads the STATUS register when the overload condition has been removed.

7.3.13.3 Current Limit Mode

To enable current limit mode, make sure that HICCUPEN = 0 in the CONTROL1 register.

When current limit operation is enabled, the device limits the high-side switch current cycle-by-cycle for as long as the overload condition exists. If the device limits the high-side switch current for four or more consecutive switching cycles, the device sets ILIM = 1 in the STATUS register.

The device clears the ILIM bit if the user reads the STATUS register when the overload condition no longer exits.

7.3.14 Power Good (PG)

The power-good (PG) pin is bidirectional and has two functions:

- In a standalone configuration and in the primary device of a stacked configuration, the PG pin is an open-drain output that indicates the status of the converter or stack.
- In a secondary device of a stacked configuration, the PG pin is an input that indicates when the soft-start sequence is complete and all converters in the stack can change from DCM switching to CCM switching.

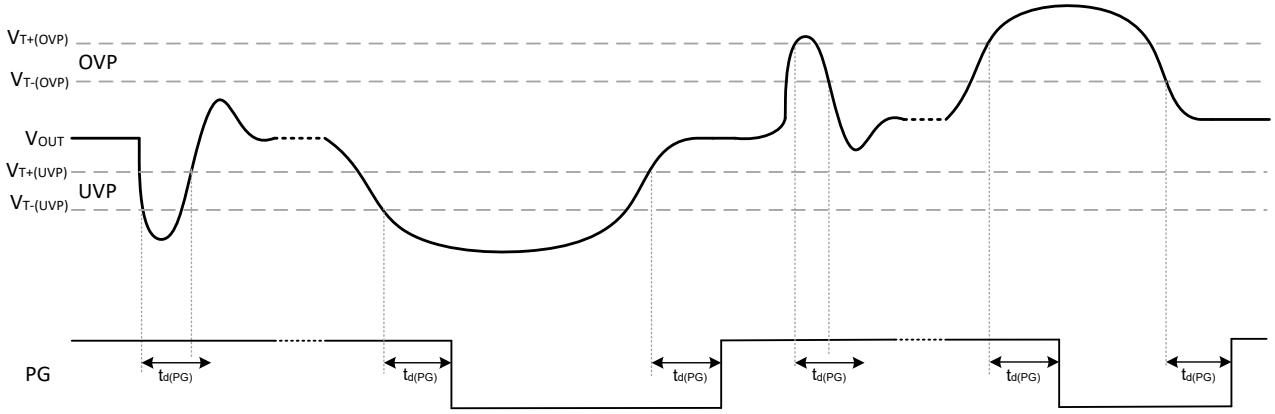

Figure 7-12. PG Timing

7.3.14.1 Standalone or Primary Device Behavior

The primary purpose of the PG pin is to indicate if the output voltage is in regulation, but the PG pin also indicates if the device is in thermal shutdown or disabled. Table 7-7 summarizes the behavior of the PG pin in a standalone or primary device.

Table 7-7. Power-Good Function Table

V_{IN}	EN	V_{OUT}	SOFT START	PGBLNKDVS	T_J	PG
V_{IN} < 2V	X	X	X	X	X	Undefined
$V_{IT-(UVLO)} \geq V_{IN} \geq 2V$	X	X	X	X	X	Low
$V_{IT-(OVLO)} > V_{IN} > V_{IT+(UVLO)}$	L	X	X	X	X	Low
	H	X	Active	X	X	Low
		$V_{OUT} > V_{T+(OVP)}$ or $V_{OUT} < V_{T-(UVP)}$	Inactive	0	X	Low
				1 (DVS inactive)	X	Low
		X		1 (DVS active)	$T_J < T_{SD}$	Hi-Z
		$V_{T-(OVP)} > V_{OUT} > V_{T+(UVP)}$		X		Hi-Z
		X	X	X	$T_J > T_{SD}$	Low
$V_{IN} > V_{IT+(OVLO)}$	X	X	X	X	X	Low

Figure 7-13 shows a functional block diagram of the power-good function in a standalone or primary device. A window comparator monitors the output voltage, and the output of the comparator goes high if the output voltage is either less than 95% (typical) or greater than 105% (typical) of the nominal output voltage. The output of the window comparator is deglitched – the typical deglitch time is 40µs – and then used to drive the open-drain PG pin.

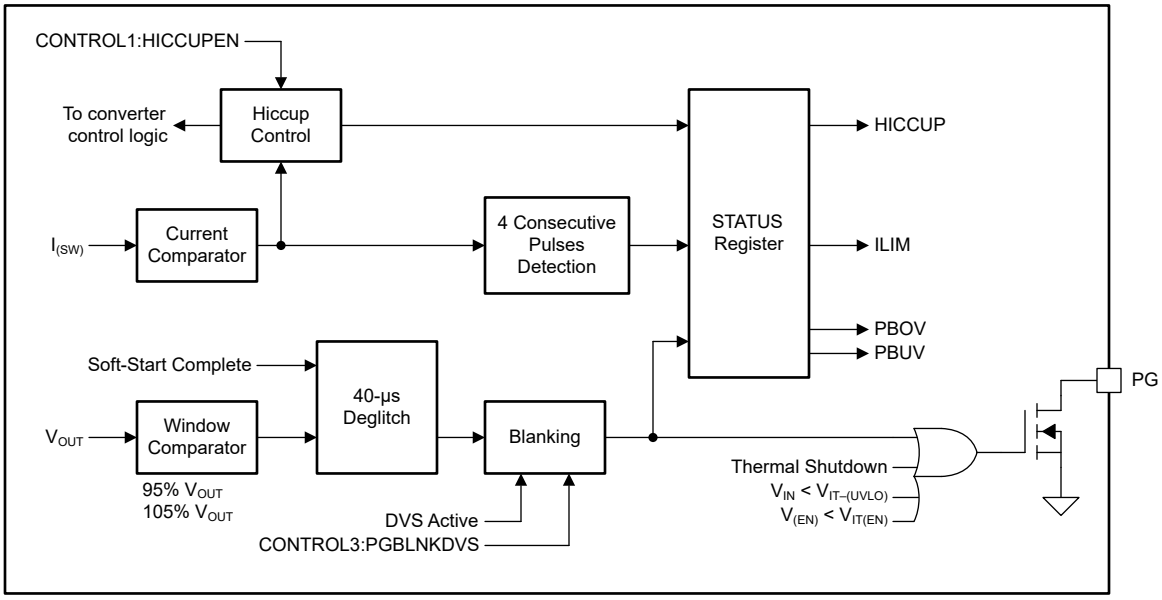

Figure 7-13. Power-Good Functional Block Diagram (Standalone or Primary Device)

If an output under or overvoltage event occurs, the device sets the PBUV or PBOV bits in the STATUS register, respectively. The device clears the PBOV and PBUV bits if the user reads the STATUS register after the power-bad condition no longer exists.

During DVS activity, the voltage reference for the window comparator follows the ramping output voltage setpoint. During a DVS in FPWM mode, PG normally does not go low because the device actively drives the output voltage up or down to follow the DVS ramp. In power save mode, PG can go low on the ramp down, if there is not sufficient load to pull down the output voltage fast enough to remain within the limits of the window comparator. In both FPWM and power save mode, setting PGBLNKDVS = 1 in the CONTROL3 register forces the device to ignore the output of the power-good window comparator for the duration of the DVS ramping time

Copyright © 2025 Texas Instruments Incorporated

(as set by the VRAMP[1:0] bits in the CONTROL1 register), keeping the PG pin high-impedance. After the DVS time has passed, PG again reflects the output of the window comparator.

Note that the PG pin is always low, regardless of the output of the window comparator, when:

- The device is in thermal shutdown
- The device is disabled
- The device is in undervoltage lockout or overvoltage lockout (UVLO or OVLO)
- The device is in soft start

A small RC filter (1kΩ + 10pF, for example) can be added to the PG pin to filter out high frequency signals.

7.3.14.2 Secondary Device Behavior

Figure 7-14 shows a functional block diagram of the power-good function in a secondary device. During initialization, the device presets FF1 and FF2, which pulls down the PG pin and forces the device to operate in DCM. When the device completes the soft start, the device resets FF2, which turns off Q1. However, in a stacked configuration, all devices share the same PG signal, and therefore the PG pin stays low until *all* devices in the stack have completed the soft start. When that happens, FF1 is reset and the converters operate in CCM.

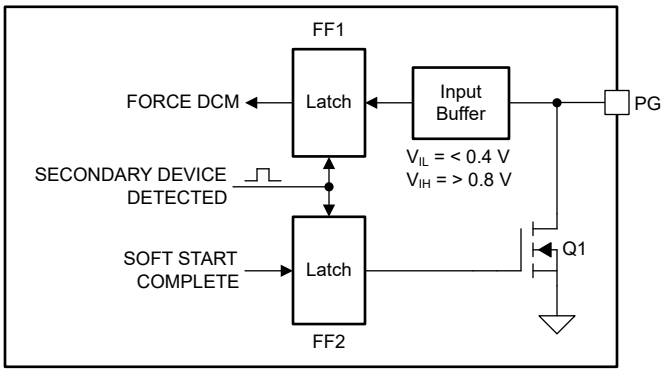

Figure 7-14. Power-Good Functional Block Diagram (Secondary Device)

7.3.15 Remote Sense

The device has two pins, VOSNS and GOSNS, to remotely sense the output voltage. Remote sensing lets the converter sense the output voltage directly at the point-of-load and increases the accuracy of the output voltage regulation.

7.3.16 Thermal Warning and Shutdown

The device has a two-level overtemperature detection function.

If the junction temperature rises above the thermal warning threshold of 150°C (typical), the device sets the TWARN bit in the STATUS register. The device clears the TWARN bit if the user reads the STATUS register when the junction temperature is below the TWARN threshold of 130°C (typical).

If the junction temperature rises above the thermal shutdown threshold of 170°C (typical), the device:

- Stops switching
- Pulls down the EN pin (if SINGLE = 0 in the CONTROL3 register)
- Enables the output discharge (if DISCHEN = 1 in the CONTROL1 register)
- Sets the TSHUT bit in the STATUS register
- Pulls the PG pin low

If the junction temperature falls below the thermal shutdown threshold of 150°C (typical), the device:

- Starts switching again, starting with a new soft-start sequence
- Sets the EN pin to high impedance
- Sets the PG pin to high-impedance

Copyright © 2025 Texas Instruments Incorporated

The device clears the TSHUT bit if the user reads the STATUS register when the junction temperature is below the TSHUT threshold of 150°C (typical).

In a stacked configuration, in which all devices share a common enable signal, a thermal shutdown condition in one device disables the entire stack. When the hot device cools down, the whole stack automatically starts switching again.

7.3.17 Stacked Operation

The user can connect multiple devices in parallel in what is known as a "stack"; for example, to increase output current capability or reduce device junction temperature. A stack comprises one *primary* device and one or more *secondary* devices. During initialization, each device monitors the SYNC_OUT pin to determine if must operate as a primary device or a secondary device:

- If there is a 47kΩ resistor between the SYNC_OUT pin and ground, the device operates as a secondary device.
- If the SYNC_OUT pin is high impedance, the device operates as a primary device.

Figure 7-15 shows the recommended interconnections in a stack of two TPS6287x devices.

Copyright © 2025 Texas Instruments Incorporated

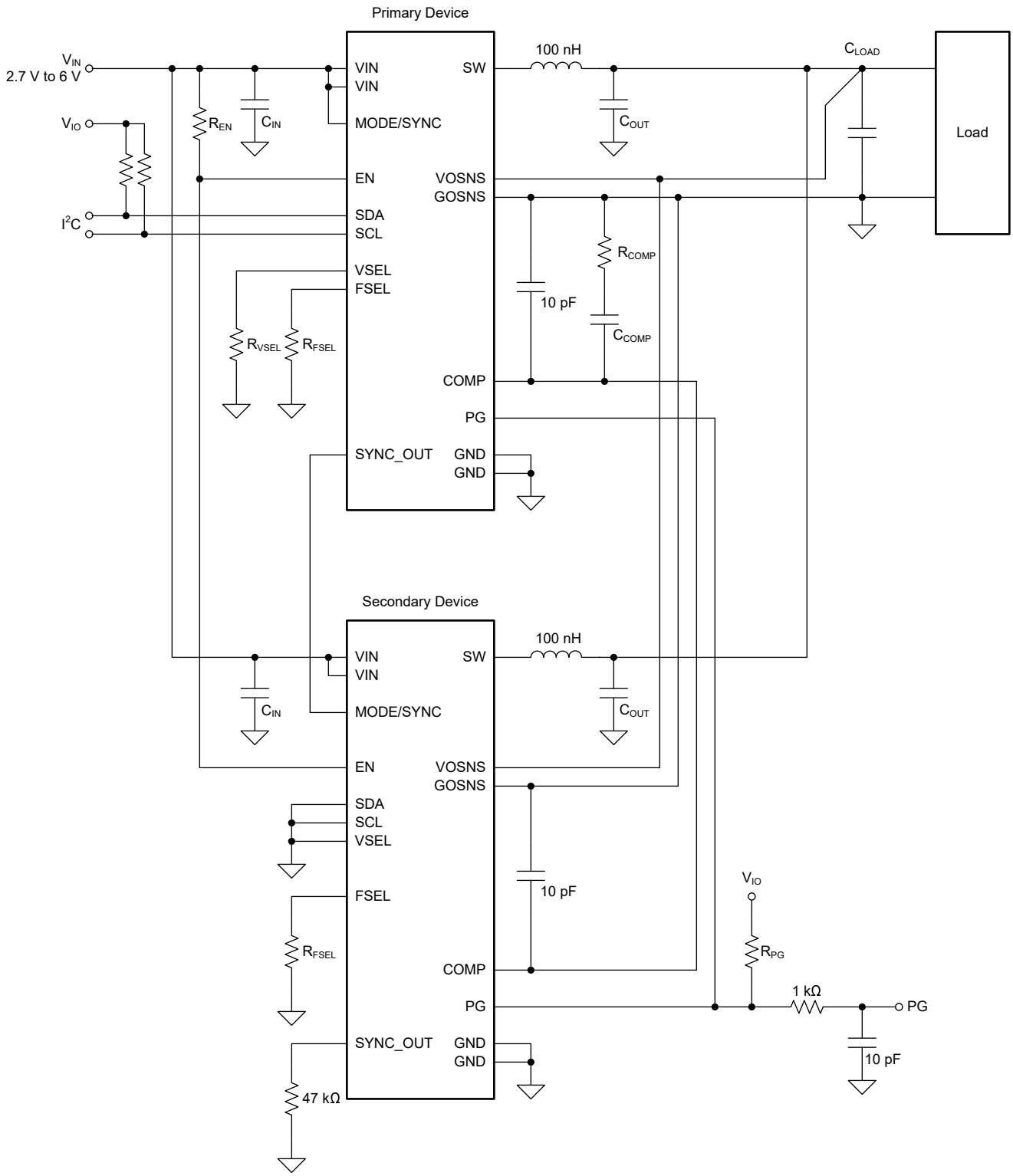

Figure 7-15. Two TPS6287x Devices in a Stacked Configuration

The key points to note are:

- All the devices in the stack share a common enable signal, which must be pulled up with a resistance of at least 15kΩ.

- All the devices in the stack share a common power-good signal, which must be pulled up to a logic high level above Vsub(IH_PG). The PG pins must be connected and pulled up, even if the PG output is not used.
- All the devices in the stack share a common compensation signal.
- All secondary devices must connect a 47kΩ resistor between the SYNC_OUT pin and ground.
- The remote sense pins (VOSNS and GOSNS) *of each device* must be connected (do not leave these pins floating).
- Each device must be configured for the same switching frequency.
- The primary device must be configured for forced PWM operation (secondary devices are automatically configured for forced PWM operation).
- A stacked configuration can support synchronization to an external clock or spread-spectrum clocking.
- Only the VSEL pin of the primary device is used to set the default output voltage. The VSEL pin of secondary devices is not used and must be connected to ground.
- The SDA and SCL pins of secondary devices are not used and must be connected to ground.
- A stacked configuration uses a daisy-chained clocking signal, in which each device switches with a phase offset of approximately 140° relative to the adjacent devices in the daisy-chain. To daisy-chain the clocking signal, connect the SYNC_OUT pin of the primary device to the MODE/SYNC pin of the first secondary device. Connect the SYNC_OUT pin of the first secondary device to the MODE/SYNC pin of the second secondary device. Continue this connection scheme for all devices in the stack, to daisy-chain them together.
- Hiccup overcurrent protection must not be used in a stacked configuration.

In a stacked configuration, the common enable signal also acts as a SYSTEM_READY signal (see Section 7.3.3). Each device in the stack can pull the EN pin low during device start-up or when a fault occurs. Thus, the stack is only enabled when all devices have completed the start-up sequence and are fault-free. A fault in any one device disables the whole stack for as long as the fault condition exists.

During start-up, the primary converter pulls the COMP pin low for as long as the enable signal (SYSTEM_READY) is low. When the enable signal goes high, the primary device actively controls the COMP pin and all converters in the stack follow the COMP voltage. During start-up, each device in the stack pulls the PG pin low while the device initializes. When initialization is complete, each secondary device in the stack sets the PG pin to a high impedance and the primary device alone controls the state of the PG signal. The PG pin goes high when the stack has completed the start-up ramp and the output voltage is within specification. The secondary converters in the stack detect the rising edge of the power-good signal and switch from DCM operation to CCM operation. After the stack has successfully started up, the primary device controls the power-good signal in the normal way. In a stacked configuration, there are some faults that only affect individual devices, and other faults that affect all devices. For example, if one device enters current limit, only that device is affected. But a thermal shutdown or undervoltage lockout event in one device disables all devices through the shared enable (SYSTEM_READY) signal.

Functionality During Stacked Operation

Some device features are not available during stacked operation, or are only available in the primary converter. Table 7-8 summarizes the available functionality during stacked operation.

Table 7-8. Functionality During Stacked Operation

FUNCTION	PRIMARY DEVICE	SECONDARY DEVICE	REMARK
UVLO	Yes	Yes	Common enable signal
OVLO	Yes	Yes	Common enable signal
OCP – Current Limit	Yes	Yes	Individual
OCP – Hiccup OCP	No	No	Do not use during stacked operation.
Thermal Shutdown	Yes	Yes	Common enable signal
Power-Good (Window Comparator)	Yes	No	Primary device only
I^2C Interface	Yes	No	Primary device only
DVS	Through I^2C	No	Voltage loop controlled by primary device only

Copyright © 2025 Texas Instruments Incorporated

Table 7-8. Functionality During Stacked Operation (continued)

FUNCTION	PRIMARY DEVICE	SECONDARY DEVICE	REMARK
SSC	Through I^2C	Yes, through primary device	Daisy-chained from primary device to secondary devices
SYNC	Yes	Yes, through primary device	Synchronization clock applied to primary device
Precise Enable	No	No	Only binary enable
Output Discharge	Through I^2C	Yes	Always enabled in secondary devices

Fault Handling During Stacked Operation

In a stacked configuration, there are some faults that only affect individual devices and other faults that affect all devices. For example, if one device enters current limit, only that device is affected. A thermal shutdown or undervoltage lockout event in one device disables all devices through the shared enable (SYSTEM_READY) signal. Table 7-9 summarizes the fault handling of the TPS6287x devices during stacked operation.

Table 7-9. Fault Handling During Stacked Operation

FAULT CONDITION	DEVICE RESPONSE	SYSTEM RESPONSE
UVLO	Enable signal pulled low	New soft start
OVLO		
Thermal shutdown		
Current limit	Enable signal remains high	Error amplifier clamped

7.4 Device Functional Modes

7.4.1 Power-On Reset

The device operates in POR mode when the supply voltage is less than the POR threshold, 1.4V (typical).

In POR mode, no functions are available and the content of the device registers is not valid.

The device leaves POR mode and enters UVLO mode when the supply voltage increases above the POR threshold.

7.4.2 Undervoltage Lockout

The device operates in UVLO mode when the supply voltage is between the POR and UVLO thresholds.

If the device enters UVLO mode from POR mode, no functions are available. If the device enters UVLO mode from standby mode, the output discharge function is available. The content of the device registers is valid in UVLO mode.

The device leaves UVLO mode and enters POR mode when the supply voltage decreases below the POR threshold. The device leaves UVLO mode and enters standby mode when the supply voltage increases above the UVLO threshold.

7.4.3 Standby

The device operates in standby mode when the supply voltage is greater than the UVLO threshold (and the device has completed the initialization) and any of the following conditions is true:

- A low level is applied to the EN pin.
- SWEN = 0 in the CONTROL1 register.
- The device junction temperature is greater than the thermal shutdown threshold.
- The supply voltage is greater than the OVLO threshold.

The device initializes during the specified time-interval $t_{d(EN)1}$ (typical 175µs, max 500µs), after the supply voltage increases above the UVLO threshold voltage following a device power-on reset. If the supply voltage decreases below the UVLO threshold but not below the POR threshold, the device does not reinitialize when

the supply voltage increases again. During initialization, the device reads the state of the FSEL, VSEL, and SYNC_OUT pins.

After the device completes the initialization, the following functions are available in standby mode:
- I^2C interface
- Output discharge
- Power good

The device leaves standby mode and enters UVLO mode when the supply voltage decreases below the UVLO threshold. The device leaves standby mode and enters on mode when all of the following conditions are true:
- A high-level is applied to the EN pin.
- SWEN = 1 in the CONTROL1 register.
- The device junction temperature is below the thermal shutdown threshold.
- The supply voltage is below the OVLO threshold.

7.4.4 On

The device operates in on mode when the supply voltage is greater than the UVLO threshold and all of the following conditions are true:
- A high-level is applied to the EN pin.
- SWEN = 1 in the CONTROL1 register.
- The device junction temperature is below the thermal shutdown threshold.
- The supply voltage is below the OVLO threshold.

All functions are available in on mode.

The device leaves on mode and enters UVLO mode when the supply voltage decreases below the UVLO threshold. The device leaves on mode and enters standby mode when any of the following conditions is true:
- A low level is applied to the EN pin.
- SWEN = 0 in the CONTROL1 register.
- The device junction temperature is greater than the thermal shutdown threshold.
- The supply voltage is greater than the OVLO threshold.

7.5 Programming

7.5.1 Serial Interface Description

I^2C is a 2-wire serial interface developed by Philips Semiconductor, now NXP Semiconductors (see I^2C-Bus Specification and User Manual, Revision 6, 4 April 2014). The bus consists of a data line (SDA) and a clock line (SCL) with pullup structures. When the bus is *idle*, both SDA and SCL lines are pulled high. All I^2C-compatible devices connect to the I^2C bus through open-drain I/O pins, SDA and SCL. A *controller*, usually a microcontroller or a digital signal processor, controls the bus. The controller is responsible for generating the SCL signal and device addresses. The controller also generates specific conditions that indicate the START and STOP of data transfer. A *target* receives data, transmits data, or both on the bus under control of the controller.

The TPS6287x device operates as a target and supports the following data transfer *modes*, as defined in the I^2C-Bus Specification: standard mode (100Kbps), fast mode (400Kbps), and fast mode plus (1Mbps). The interface adds flexibility to the power supply design, enabling most functions to be programmed to new values depending on the instantaneous application requirements. Register contents remain intact as long as the input voltage remains above 1.4V.

The data transfer protocol for standard and fast modes is exactly the same, therefore, the modes are referred to as F/S-mode in this document. The device supports 7-bit addressing; general call addresses are not supported.

The state of the VSEL pin during power up defines the I^2C target address of the device (see Table 7-10). Note that the VSEL pin also sets the default start-up voltage of the device (see Table 7-4).

Table 7-10. I^2C Interface Target Address Selection

VSEL PIN	I^2C TARGET ADDRESS [(1)]
6.2kΩ to GND	0x40

Copyright © 2025 Texas Instruments Incorporated

Table 7-10. I²C Interface Target Address Selection (continued)

VSEL PIN	I²C TARGET ADDRESS (1)
Short Circuit to GND	0x41
Short Circuit to V_{IN}	0x42
47kΩ to V_{IN}	0x43

(1) Available I²C address. This parameter is Device number dependent. Refer to the device options table in Section 4

TI recommends that the I²C controller initiates a STOP condition on the I²C bus after the initial power up of SDA and SCL pullup voltages to make sure of reset of the I²C engine.

7.5.2 Standard, Fast, Fast Mode Plus Protocol

The controller initiates a data transfer by generating a start condition. The start condition is when a high-to-low transition occurs on the SDA line while SCL is high, as shown in Figure 7-16. All I²C-compatible devices must recognize a start condition.

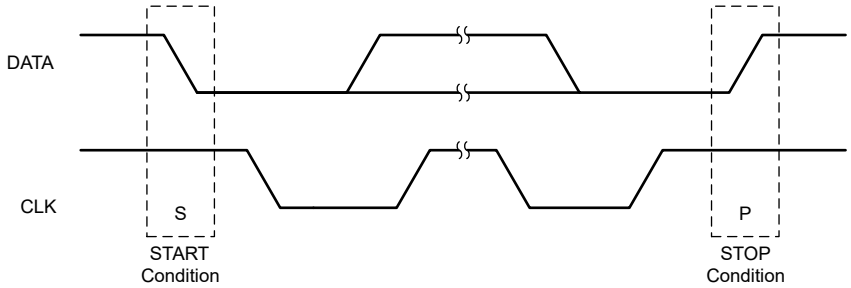

Figure 7-16. START and STOP Conditions

The controller then generates the SCL pulses, and transmits the 7-bit address and the read and write direction bit R/$\overline{W}$ on the SDA line. During all transmissions, the controller makes sure that data is valid. A valid data condition requires the SDA line to be stable during the entire high period of the clock pulse (see Figure 7-17). All devices recognize the address sent by the controller and compare the address to the internal fixed addresses. Only the target with a matching address generates an acknowledge (see Figure 7-18) by pulling the SDA line low during the entire high period of the ninth SCL cycle. Upon detecting this acknowledge, the controller knows that a communication link with a target has been established.

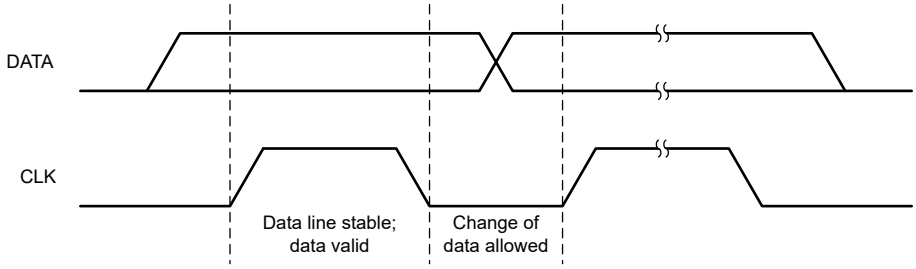

Figure 7-17. Bit Transfer on the Serial Interface

The controller generates further SCL cycles to either transmit data to the target (R/$\overline{W}$ bit 0) or receive data from the target (R/$\overline{W}$ bit 1). In either case, the target must acknowledge the data sent by the controller. So an acknowledge signal can either be generated by the controller or by the target, depending on which one is the receiver. 9-bit valid data sequences consisting of 8-bit data and 1-bit acknowledge can continue as long as necessary.

To signal the end of the data transfer, the controller generates a stop condition by pulling the SDA line from low to high while the SCL line is high (see Figure 7-16). This stop condition releases the bus and stops the communication link with the addressed target. All I²C-compatible devices must recognize the stop condition.

Upon the receipt of a stop condition, all devices know that the bus is released, and the devices wait for a start condition followed by a matching address.

Attempting to read data from register addresses not listed in this section results in 0x00 being read out.

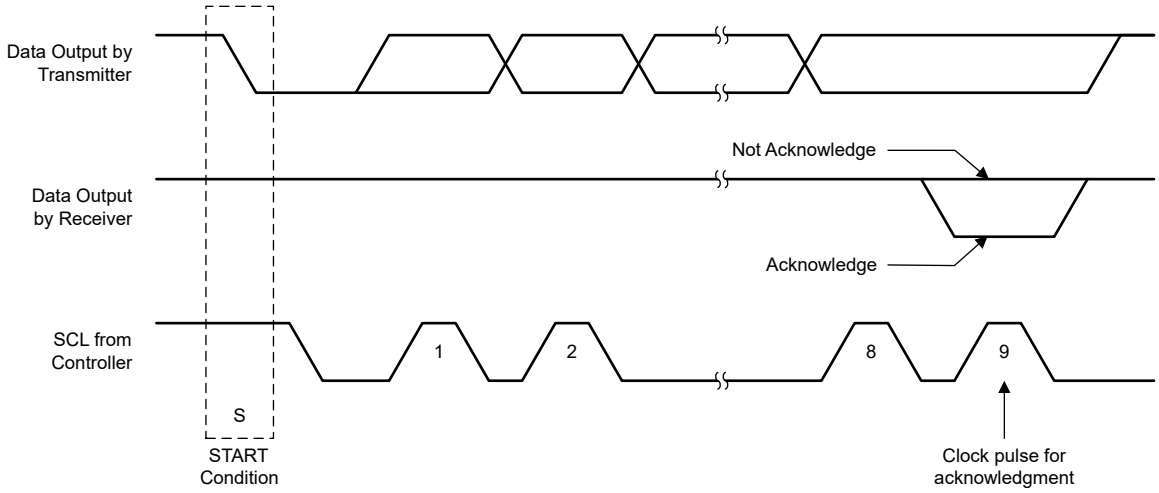

Figure 7-18. Acknowledge on the I²C Bus

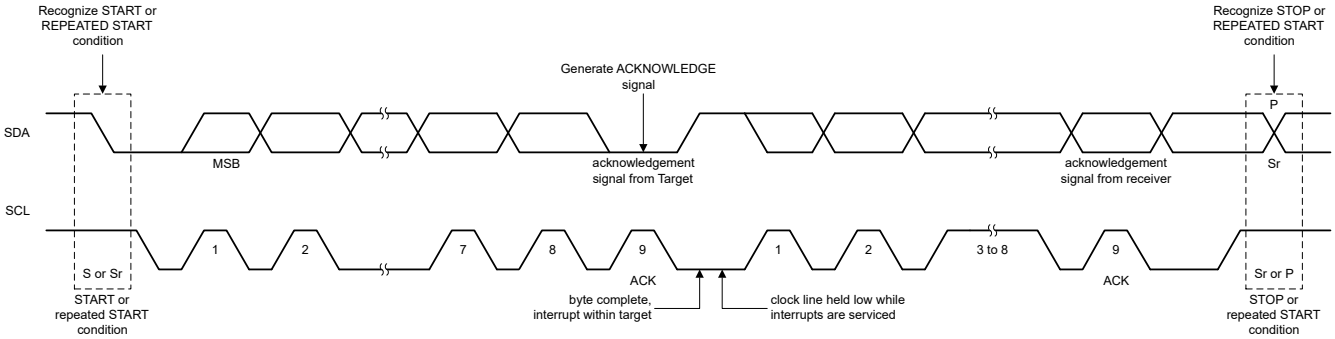

Figure 7-19. Bus Protocol

7.5.3 I²C Update Sequence

The following are required for a single update:

- A start condition
- A valid I²C address
- A register address byte
- A data byte

After the receipt of each byte, the receiving device acknowledges by pulling the SDA line low during the high period of a single clock pulse. A valid I²C address selects the target. The target performs an update on the falling edge of the acknowledge signal that follows the LSB byte.

Copyright © 2025 Texas Instruments Incorporated

Figure 7-20. "Write" Data Transfer Format in Standard, Fast, Fast Plus Modes

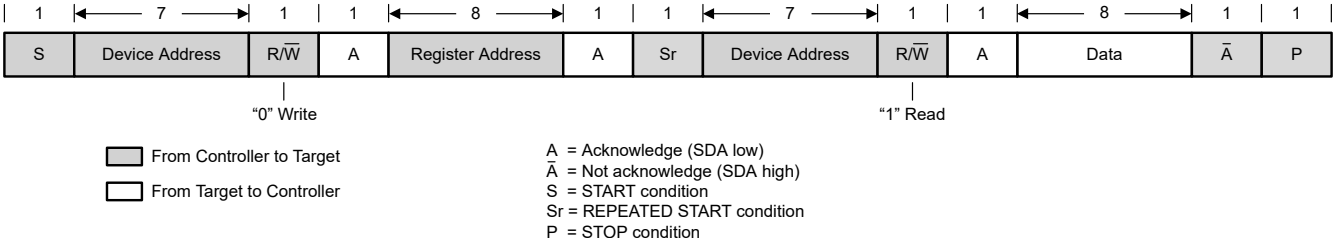

Figure 7-21. "Read" Data Transfer Format in Standard, Fast, Fast Plus Modes

7.5.4 I²C Register Reset

The I²C registers can be reset by:

- Pulling the input voltage below 1.4V (typical).
- Setting the RESET bit in the CONTROL register. When RESET = 1, all registers are reset to the default values and a new start-up begins immediately. After $t_{d(EN)2}$, the user can program the I²C registers again.

8 Register Map

Table 8-1 lists the device registers. Consider all register offset addresses not listed in Table 8-1 as reserved locations. Do not modify the register contents.

Table 8-1. Device Registers

Address	Acronym	Register Name	Section
0h	VSET	Output Voltage Setpoint	Go
1h	CONTROL1	Control 1	Go
2h	CONTROL2	Control 2	Go
3h	CONTROL3	Control 3	Go
4h	STATUS	Status	Go

Complex bit access types are encoded to fit into small table cells. Table 8-2 shows the codes that are used for access types in this section.

Table 8-2. Device Access Type Codes

Access Type	Code	Description
Read Type		
R	R	Read
Write Type		
W	W	Write
Reset or Default Value		
- *n*		Value after reset or the default value

Copyright © 2025 Texas Instruments Incorporated

8.1 VSET Register (Address = 0h) [Reset = X]

VSET is shown in Figure 8-1 and described in Table 8-3.

Return to the Summary Table.

This register controls the output voltage setpoint.

Figure 8-1. VSET Register

7	6	5	4	3	2	1	0
VSET							
R/W-X							

Table 8-3. VSET Register Field Descriptions

Bit	Field	Type	Reset	Description
7-0	VSET	R/W	X	Output voltage setpoint (see the range-setting bits in the CONTROL2 register.) Range 1: Output voltage setpoint = 0.4V + VSET[7:0] × 1.25mV Range 2: Output voltage setpoint = 0.4V + VSET[7:0] × 2.5mV Range 3: Output voltage setpoint = 0.4V + VSET[7:0] × 5mV Range 4: Output voltage setpoint = 0.8V + VSET[7:0] × 10mV The state of the VSEL pin during power up determines the reset value.

Copyright © 2025 Texas Instruments Incorporated

8.2 CONTROL1 Register (Address = 1h) [Reset = 2Ah]

CONTROL1 is shown in Figure 8-2 and described in Table 8-4.

Return to the Summary Table.

This register controls various device configuration options.

Figure 8-2. CONTROL1 Register

7	6	5	4	3	2	1	0
RESET	SSCEN	SWEN	FPWMEN	DISCHEN	HICCUPEN	VRAMP	
R/W-0b	R/W-0b	R/W-1b	R/W-0b	R/W-1b	R/W-0b	R/W-10b	

Table 8-4. CONTROL1 Register Field Descriptions

Bit	Field	Type	Reset	Description
7	RESET	R/W	0b	Reset device 0b = No effect 1b = Resets all registers to the default values Reading this bit always returns 0.
6	SSCEN	R/W	0b	Spread spectrum clocking enable 0b = SSC operation disabled 1b = SSC operation enabled
5	SWEN	R/W	1b	Software enable 0b = Switching disabled (register values retained) 1b = Switching enabled (without the enable delay)
4	FPWMEN	R/W	0b	Forced PWM enable 0b = Power-save operation enabled 1b = Forced-PWM operation enabled This bit is logically ORed with the MODE/SYNC pin. If a high level or a synchronization clock is applied to the MODE/SYNC pin, the device operates in forced-PWM, regardless of the state of this bit.
3	DISCHEN	R/W	1b	Output discharge enable 0b = Output discharge disabled 1b = Output discharge enabled
2	HICCUPEN	R/W	0b	Hiccup operation enable 0b = Hiccup operation disabled 1b = Hiccup operation enabled. Do not enable hiccup operation during stacked operation.
1-0	VRAMP	R/W	10b	Output voltage ramp speed when changing from one output voltage setting to another 00b = 10mV/µs 01b = 5mV/µs 10b = 1.25mV/µs 11b = 0.5mV/µs

Copyright © 2025 Texas Instruments Incorporated

8.3 CONTROL2 Register (Address = 2h) [Reset = 9h]

CONTROL2 is shown in Figure 8-3 and described in Table 8-5.

Return to the Summary Table.

This register controls various device configuration options.

Figure 8-3. CONTROL2 Register

7	6	5	4	3	2	1	0
RESERVED				VRANGE		SSTIME	
R-0000b				R/W-10b		R/W-01b	

Table 8-5. CONTROL2 Register Field Descriptions

Bit	Field	Type	Reset	Description
7-4	RESERVED	R	0000b	Reserved for future use. For compatibility with future device variants, program these bits to 0.
3-2	VRANGE	R/W	10b	Output voltage range 00b = 0.4V to 0.71875V in 1.25mV steps 01b = 0.4V to 1.0375V in 2.5mV steps 10b = 0.4V to 1.675V in 5mV steps 11b = 0.8V to 3.35V in 10mV steps
1-0	SSTIME	R/W	01b	Soft-start ramp time 00b = 0.5ms 01b = 1ms 10b = 2ms 11b = 4ms

Copyright © 2025 Texas Instruments Incorporated

8.4 CONTROL3 Register (Address = 3h) [Reset = 0h]

CONTROL3 is shown in Figure 8-4 and described in Table 8-6.

Return to the Summary Table.

This register controls various device configuration options.

Figure 8-4. CONTROL3 Register

7	6	5	4	3	2	1	0
RESERVED						SINGLE	PGBLNKDVS
R-000000b						R/W-0b	R/W-0b

Table 8-6. CONTROL3 Register Field Descriptions

Bit	Field	Type	Reset	Description
7-2	RESERVED	R	000000b	Reserved for future use. For compatibility with future device variants, program these bits to 0.
1	SINGLE	R/W	0b	Single operation. This bit controls the internal EN pulldown and SYNC_OUT functions. 0b = EN pin pulldown and SYNC_OUT enabled 1b = EN pin pulldown and SYNC_OUT disabled. Do not use during stacked operation.
0	PGBLNKDVS	R/W	0b	Power-good blanking during DVS 0b = PG pin reflects the output of the window comparator. 1b = PG pin is high impedance during DVS.

Copyright © 2025 Texas Instruments Incorporated

8.5 STATUS Register (Address = 4h) [Reset = 2h]

STATUS is shown in Figure 8-5 and described in Table 8-7.

Return to the Summary Table.

This register returns the device status flags.

Figure 8-5. STATUS Register

7	6	5	4	3	2	1	0
RESERVED		HICCUP	ILIM	TWARN	TSHUT	PBUV	PBOV
R-00b		R-0b	R-0b	R-0b	R-0b	R-1b	R-0b

Table 8-7. STATUS Register Field Descriptions

Bit	Field	Type	Reset	Description
7-6	RESERVED	R	00b	Reserved for future use. For compatibility with future device variants, ignore these bits.
5	HICCUP	R	0b	Hiccup. This bit reports whether a hiccup event occurred since the last time the STATUS register was read. 0b = No hiccup event occurred 1b = A hiccup event occurred
4	ILIM	R	0b	Current limit. This bit reports whether an current limit event occurred since the last time the STATUS register was read. 0b = No current limit event occurred 1b = An current limit event occurred
3	TWARN	R	0b	Thermal warning. This bit reports whether a thermal warning event occurred since the last time the STATUS register was read. 0b = No thermal warning event occurred 1b = A thermal warning event occurred
2	TSHUT	R	0b	Thermal shutdown. This bit reports whether a thermal shutdown event occurred since the last time the STATUS register was read. 0b = No thermal shutdown event occurred 1b = A thermal shutdown event occurred
1	PBUV	R	1b	Power-bad undervoltage. This bit reports whether a power-bad event (output voltage too low) occurred since the last time the STATUS register was read. 0b = No power-bad undervoltage event occurred 1b = A power-bad undervoltage event occurred
0	PBOV	R	0b	Power-bad overvoltage. This bit reports whether a power-bad event (output voltage too high) occurred since the last time the STATUS register was read. 0b = No power-bad overvoltage event occurred 1b = A power-bad overvoltage event occurred

Copyright © 2025 Texas Instruments Incorporated

9 Application and Implementation

Note

Information in the following applications sections is not part of the TI component specification, and TI does not warrant its accuracy or completeness. TI's customers are responsible for determining suitability of components for their purposes, as well as validating and testing their design implementation to confirm system functionality.

9.1 Application Information

The following section discusses selection of the external components to complete the power supply design for typical a application.

9.2 Typical Application

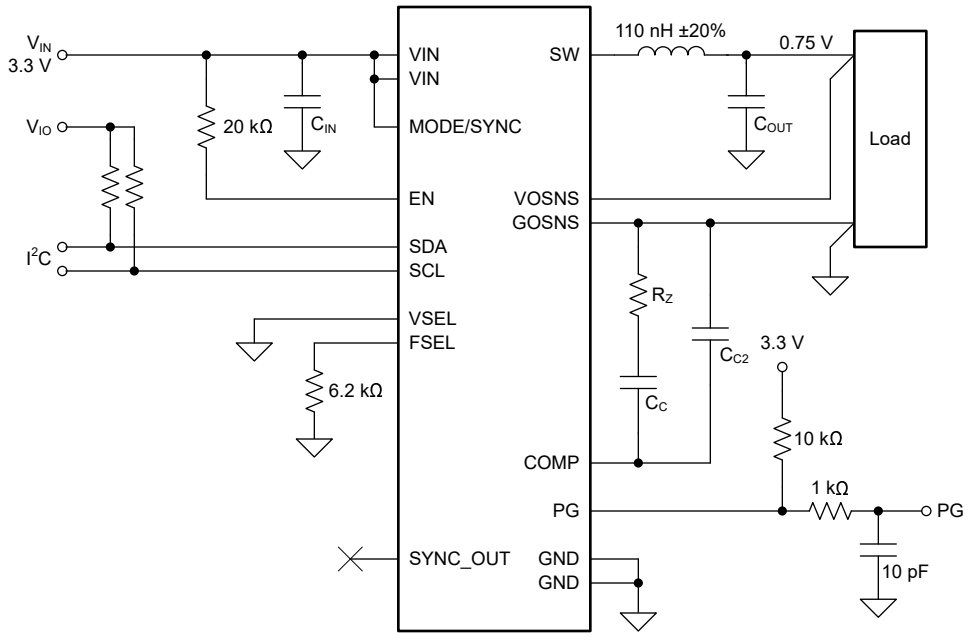

Figure 9-1. Typical Application Schematic

9.2.1 Design Requirements

Table 9-1 lists the operating parameters for this application example.

Table 9-1. Design Parameters

SYMBOL	PARAMETER	VALUE
V_{IN}	Input voltage	3.3V
V_{OUT}	Output voltage	0.75V
TOL_{VOUT}	Output voltage tolerance allowed by the application	±3.3%
TOL_{DC}	Output voltage tolerance of the TPS6287x (DC accuracy)	±1%
ΔI_{OUT}	Output current load step	±7.5A (from 3.8A to 11.3A)
t_t	Load step transition time	1µs
f_{SW}	Switching frequency	2.25MHz
L	Inductance	110nH
TOL_{IND}	Inductor tolerance	±20%
g_m	Error amplifier transconductance	1.5mS
τ	Internal timing parameter	12.5µs

Copyright © 2025 Texas Instruments Incorporated

Table 9-1. Design Parameters (continued)

SYMBOL	PARAMETER	VALUE
TOL_T	Tolerance of the internal timing parameter	±30%
k_{BW}	Ratio of switching frequency to converter bandwidth (must be ≥ 4)	4
Nϕ	Number of phases	1

Preliminary Calculations

The maximum allowable deviation of the power supply is ±3.3%. The DC accuracy of the TPS6287x is specified as ±1%, therefore, the maximum output voltage variation during a transient is given by:

$$\Delta V_{OUT} = \pm V_{OUT} \times (3.3\% - 1\%) = \pm 17.25mV \quad (6)$$

9.2.2 Detailed Design Procedure

The following subsections describe how to calculate the external components required to meet the specified transient requirements of a given application. The calculations include the worst-case variation of components and use the RMS method to combine the variation of uncorrelated parameters.

9.2.2.1 Selecting the Inductor

TPS6287x devices are optimized for inductors in the range 50nH to 300nH. If the transient response of the converter is limited by the slew rate of the current in the inductor, using a smaller inductor can improve performance. However, the output ripple current increases as the value of the inductor decreases, and higher output current ripple generates higher output voltage ripple, which adds to the transient overshoot or undershoot. The optimal configuration for a given application is always a trade-off between a number of parameters. TI recommends a starting value of 110nH for typical applications.

The peak-to-peak inductor current ripple is given by:

$$I_{L(PP)} = \frac{V_{OUT}}{V_{IN}}\left(\frac{V_{IN} - V_{OUT}}{N\phi \times L \times f_{sw}}\right) \quad (7)$$

$$I_{L(PP)} = \frac{0.75}{3.3}\left(\frac{3.3 - 0.75}{1 \times 110 \times 10^{-9} \times 2.25 \times 10^{6}}\right) = 2.342A \quad (8)$$

Table 9-2 lists a number of inductors designed for use with this application. This list is not exhaustive and other inductors from other manufacturers can also be an excellent choice.

Table 9-2. List of Recommended Inductors

INDUCTANCE	CURRENT RATING (I_{SAT} AT 25°C)	DIMENSIONS (L × W × H)	DC RESISTANCE	PART NUMBER(1)
92nH	24A	4 × 4 × 1.2mm	5.2mΩ (typical)	Coilcraft, XEL4012-920NE
100nH	30A	4 × 4 × 3.2mm	1.5mΩ (typical)	Coilcraft, XEL4030-101ME
110nH	29A	4 × 4 × 2.1mm	1.4mΩ (typical)	Coilcraft, XGL4020-111ME
110nH	29A	3.2 × 2.5 × 2.5mm	1.9mΩ (typical)	TDK, CLT32-R11
55nH	39.5A	3.2 × 2.5 × 2.5mm	1.0mΩ (typical)	TDK, CLT32-55N
110nH	17.0A	3.2 × 2.5 × 2.5mm	3.0mΩ (typical)	Cyntec, VCTA32252E-R11MS6
100nH	25A	4.2 × 4.0 × 2.1mm	1.9mΩ (typical)	Cyntec, VCHA042A-R10MS62M
100nH	44A	5.45 × 5.25 × 2.8mm	0.8mΩ (typical)	Cyntec, VCHW053T-R10NMS5

(1) See Section 10.1.1.

9.2.2.2 Selecting the Input Capacitors

As with all buck converters, the input current of the TPS6287x devices is discontinuous. The input capacitors provide a low-impedance energy source for the device, and the value, type, and location are critical for correct

operation. TI recommends low-ESR multilayer ceramic capacitors for best performance. In practice, the total input capacitance is typically comprised of a combination of different capacitors, in which larger capacitors provide the decoupling at lower frequencies and smaller capacitors provide the decoupling at higher frequencies.

The TPS6287x devices feature a *butterfly* layout with two pairs of VIN and GND pins on opposite sides of the package. This allows the input capacitors to be placed symmetrically on the PCB so that the electromagnetic fields generated cancel each other out, thereby reducing EMI.

The duty cycle of the converter is given by:

$$D = \frac{V_{OUT}}{\eta \times V_{IN}} \tag{9}$$

where

- V_{IN} is the input voltage.
- V_{OUT} is the output voltage.
- η is the efficiency.

$$D = \frac{0.75}{0.9 \times 3.3} = 0.253 \tag{10}$$

The value of input capacitance needed to meet the input voltage ripple requirements is given by:

$$C_{IN} = \frac{D \times (1 - D) \times I_{OUT}}{V_{IN(PP)} \times f_{sw}} \tag{11}$$

where

- D is the duty cycle.
- f_{sw} is the switching frequency.
- L is the inductance.
- I_{OUT} is the output current. Use the maximum value of 11.3A as given for ΔI_{OUT} in Table 9-1

100mV is used as the input voltage ripple target.

$$C_{IN} = \frac{0.253 \times (1 - 0.253) \times 11.3}{0.1 \times 2.25 \times 10^6} = 9.5\mu F \tag{12}$$

The value of C_{IN} calculated with Equation 11 is the *effective* capacitance after all derating, tolerance, and aging effects have been considered. 5µF effective capacitance per input pin is required. TI recommends multilayer ceramic capacitors with an X7R dielectric (or similar) for C_{IN}, and these capacitors must be placed as close to the VIN and GND pins as possible to minimize the loop area.

Table 9-3 lists a number of capacitors that are an excellent choice for this application. This list is not exhaustive and other capacitors from other manufacturers can also be an excellent choice.

Table 9-3. List of Recommended Input Capacitors

CAPACITANCE	DIMENSIONS MM (INCH)	VOLTAGE RATING	MANUFACTURER, PART NUMBER(1)
470nF ±10%	1005 (0402)	10V	Murata, GCM155C71A474KE36D
470nF ±10%	1005 (0402)	10V	TDK, CGA2B3X7S1A474K050BB
10µF ±10%	2012 (0805)	10V	Murata, GCM21BR71A106KE22L
10µF ±10%	2012 (0805)	10V	TDK, CGA4J3X7S1A106K125AB
22µF ±10%	3216 (1206)	10V	Murata, GCM31CR71A226KE02L
22µF ±20%	3216 (1206)	10V	TDK, CGA5L1X7S1A226M160AC

(1) See Section 10.1.1.

Copyright © 2025 Texas Instruments Incorporated

9.2.2.3 Selecting the Compensation Resistor

Use Equation 13 to calculate the recommended value of compensation resistor, R_Z:

$$R_Z = \frac{1}{g_m}\left(\frac{\pi \times \left[\Delta I_{OUT} + \frac{I_{L(PP)}}{2}\right] \times \frac{L}{N\phi}}{4 \times \tau \times \Delta V_{OUT}} - 1\right)\left(1 + \sqrt{{TOL_{IND}}^2 + {TOL_\tau}^2}\right) \tag{13}$$

$$R_Z = \frac{1}{1.5 \times 10^{-3}}\left(\frac{\pi \times \left[7.5 + \frac{2.342}{2}\right] \times \frac{110 \times 10^{-9}}{1}}{4 \times 12.5 \times 10^{-6} \times 17.25 \times 10^{-3}} - 1\right)\left(1 + \sqrt{{20\%}^2 + {30\%}^2}\right) = 2.244\text{k}\Omega \tag{14}$$

Rounding up, the closest standard value from the E24 series is 2.4kΩ.

9.2.2.4 Selecting the Output Capacitors

In practice, the total output capacitance is typically comprised of a combination of different capacitors, in which larger capacitors provide the load current at lower frequencies and smaller capacitors provide the load current at higher frequencies. The value, type, and location of the output capacitors are critical for correct operation. TI recommends low-ESR multilayer ceramic capacitors with an X7R dielectric (or similar) for best performance.

The TPS6287x devices feature a butterfly layout with two GND pins on opposite sides of the package. This allows the output capacitors to be placed symmetrically on the PCB such that the electromagnetic fields generated cancel each other out, thereby reducing EMI.

The transient response of the converter is limited by one of two criteria:

- The slew rate of the current through the inductor, in which case, the feedback loop of the converter saturates.
- The maximum allowed ratio of converter bandwidth to switching frequency, in which the converter remains in regulation (that is, the loop does not saturate). TI recommends a minimum ratio of four for typical applications.

Which of the above criteria applies in any given application depends on the operating conditions and component values used. Therefore, TI recommends that the user calculate the output capacitance for both cases, and select the higher of the two values.

If the converter remains in regulation, the minimum output required capacitance is given by:

$$C_{OUT(min)(reg)} = \left(\frac{\tau \times (1 + g_m \times R_Z)}{2 \times \pi \times \frac{L}{N\phi} \times \frac{f_{SW}}{4}}\right)\left(1 + \sqrt{{TOL_\tau}^2 + {TOL_{IND}}^2 + {TOL_{fSW}}^2}\right) \tag{15}$$

$$C_{OUT(min)(reg)} = \left(\frac{12.5 \times 10^{-6} \times \left(1 + 1.5 \times 10^{-3} \times 2.4 \times 10^{3}\right)}{2 \times \pi \times \frac{110 \times 10^{-9}}{1} \times \frac{2.25 \times 10^{6}}{4}}\right)\left(1 + \sqrt{{30\%}^2 + {20\%}^2 + {10\%}^2}\right) = 203.2\mu\text{F} \tag{16}$$

If the converter loop saturates, the minimum output capacitance is given by:

$$C_{OUT(min)(sat)} = \frac{1}{\Delta V_{OUT}}\left(\frac{\frac{L}{N\phi} \times \left(\Delta I_{OUT} + \frac{I_{L(PP)}}{2}\right)^2}{2 \times V_{OUT}} - \frac{\Delta I_{OUT} \times t_t}{2}\right)(1 + TOL_{IND}) \tag{17}$$

$$C_{OUT(min)(sat)} = \frac{1}{17.25 \times 10^{-3}}\left(\frac{\frac{110 \times 10^{-9}}{1} \times \left(7.5 + \frac{2.342}{2}\right)^2}{2 \times 0.75} - \frac{7.5 \times 1 \times 10^{-6}}{2}\right)(1 + 20\%) = 122.7\mu\text{F} \tag{18}$$

In this case, choose $C_{OUT(min)}$ = 203µF as the larger of the two values for the output capacitance.

When calculating worst-case component values, use the value calculated above as the *minimum* output capacitance required. For ceramic capacitors, the *maximum* capacitance when considering tolerance, DC bias, temperature, and aging effects is typically two times the minimum capacitance. In this case, the maximum capacitance $C_{OUT(max)}$ is 406µF.

Table 9-4. List of Recommended Output Capacitors

CAPACITANCE	DIMENSIONS MM (INCH)	VOLTAGE RATING	MANUFACTURER, PART NUMBER(1)
22µF ±20%	2012 (0805)	6.3V	TDK, CGA4J1X7T0J226M125AC
22µF ±10%	2012 (0805)	6.3V	Murata, GCM31CR71A226KE02
47µF ±20%	3216 (1206)	4V	TDK, CGA5L1X7T0G476M160AC
47µF ±20%	2012 (1210)	6.3V	Murata, GCM32ER70J476ME19
100µF ±20%	3225 (1210)	4V	TDK, CGA6P1X7T0G107M250AC
100µF ±20%	3216 (1210)	6.3V	Murata, GRT32EC70J107ME13

(1) See Section 10.1.1.

9.2.2.5 Selecting the Compensation Capacitor, C_C

First, use Equation 19 to calculate the bandwidth of the inner loop:

$$BW_{INNER} = \frac{\tau}{2\pi \times \frac{L}{N\Phi} \times C_{OUT(max)}} \tag{19}$$

$$BW_{INNER} = \frac{12.5 \times 10^{-6}}{2\pi \times \frac{110 \times 10^{-9}}{1} \times 406 \times 10^{-6}} = 45\text{kHz} \tag{20}$$

Next, calculate the product of $g_m R_Z$:

$$g_m \times R_Z = 1.5 \times 10^{-3} \times 2.4 \times 10^{3} = 3.6 \tag{21}$$

If $g_m R_Z$ > than 1, use Equation 22 to calculate the recommended value of C_C. If $g_m R_Z$ < 1, use Equation 24 to calculate the recommended value of C_C.

$$C_C = \frac{2}{\pi \times BW_{INNER} \times g_m \times {R_Z}^2} \tag{22}$$

$$C_C = \frac{2}{\pi \times 45 \times 10^{3} \times 1.5 \times 10^{-3} \times \left(2.4 \times 10^{3}\right)^2} = 1.638\text{nF} \tag{23}$$

The closest standard value from the E12 series is 1.8nF.

$$C_C = \frac{2 \times g_m}{\pi \times BW_{INNER}} \tag{24}$$

9.2.2.6 Selecting the Compensation Capacitor, C_{C2}

The compensation capacitor, C_{C2}, is an optional capacitor that TI recommends the user include to bypass high-frequency noise away from the COMP pin. The value of this capacitor is not critical; 10pF or 22pF capacitors are an excellent choice for typical applications.

Copyright © 2025 Texas Instruments Incorporated

9.2.3 Application Curves

All application curves are obtained with L = 110nH (Coilcraft XGL4020-111ME) and f_{sw} = 2.25MHz, unless noted otherwise.

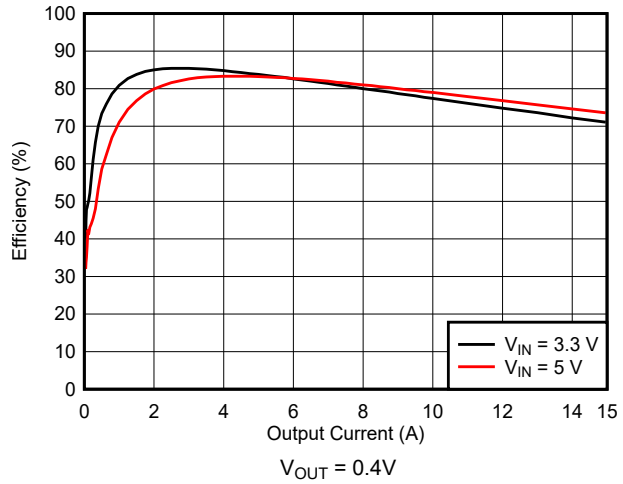

Figure 9-2. Efficiency

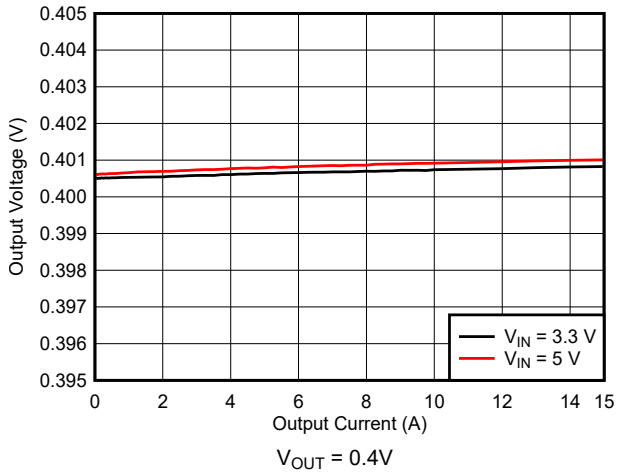

Figure 9-3. Load Regulation

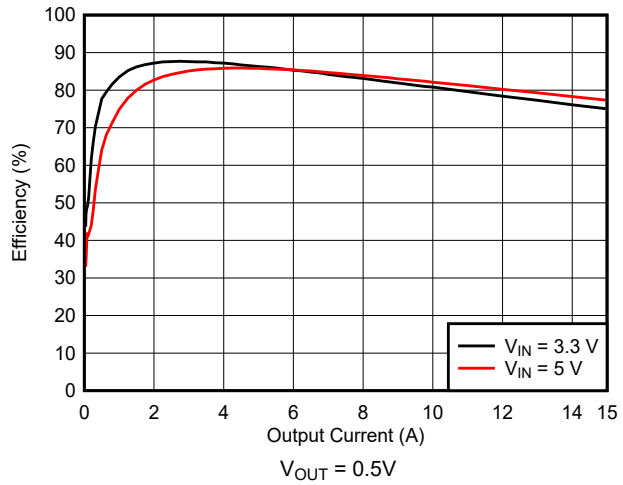

Figure 9-4. Efficiency

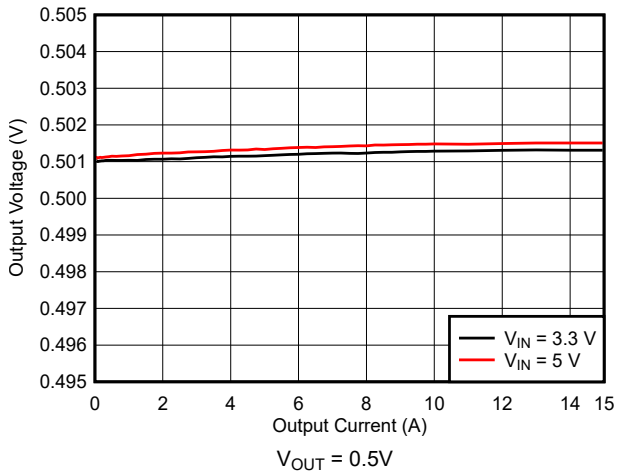

Figure 9-5. Load Regulation

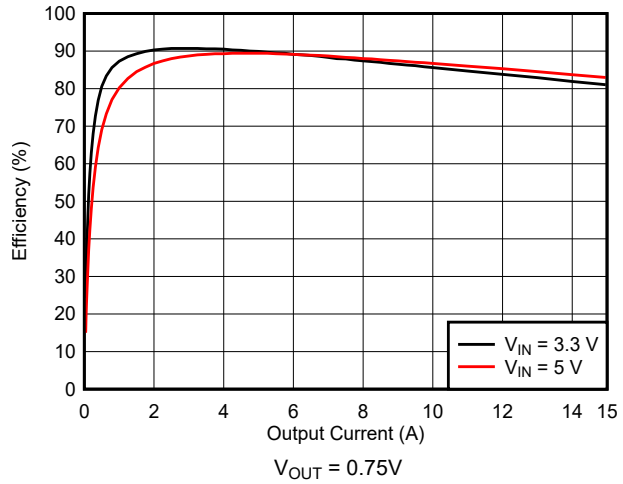

Figure 9-6. Efficiency

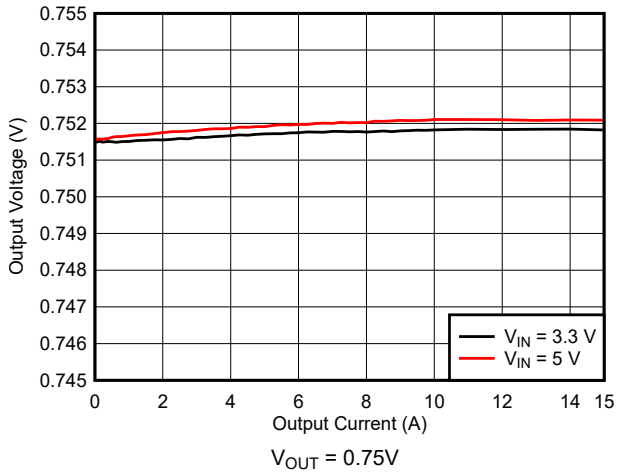

Figure 9-7. Load Regulation

9.2.3 Application Curves (continued)

All application curves are obtained with L = 110nH (Coilcraft XGL4020-111ME) and f_{sw} = 2.25MHz, unless noted otherwise.

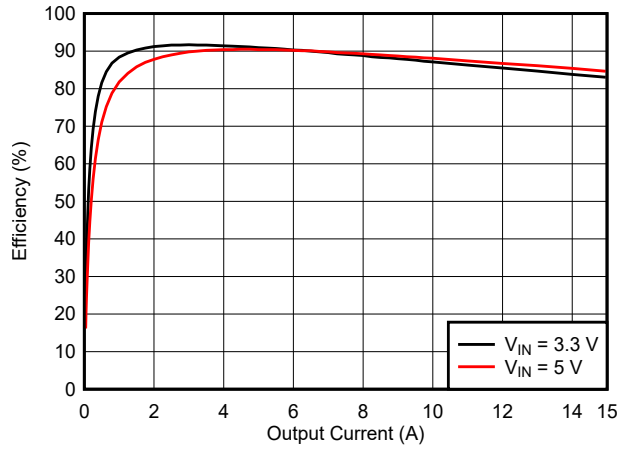

V_{OUT} = 0.875V

Figure 9-8. Efficiency

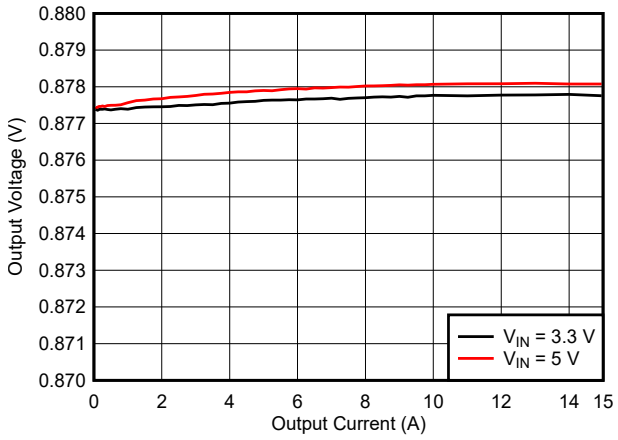

V_{OUT} = 0.875V

Figure 9-9. Load Regulation

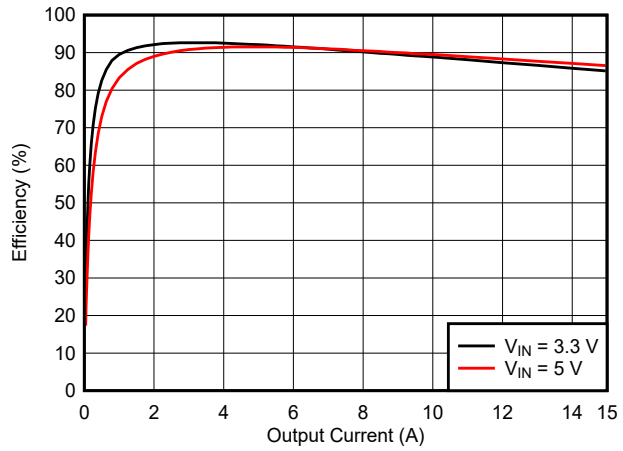

V_{OUT} = 1.05V

Figure 9-10. Efficiency

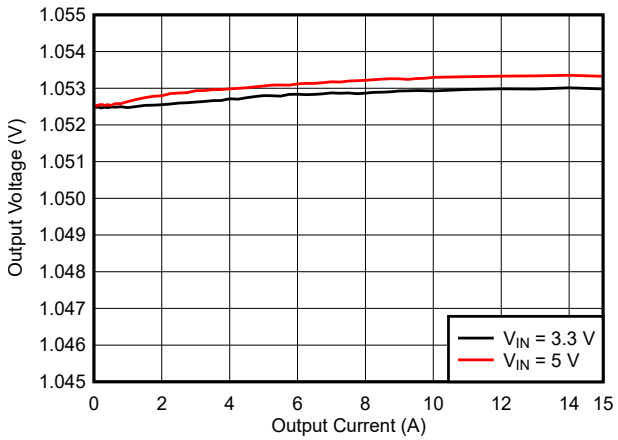

V_{OUT} = 1.05V

Figure 9-11. Load Regulation

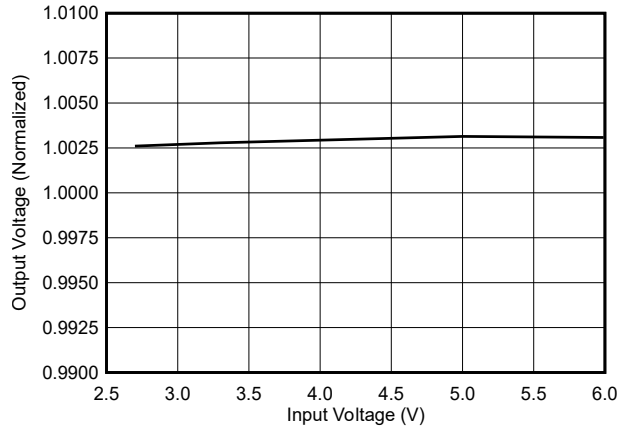

I_{OUT} = 10A

Figure 9-12. Line Regulation

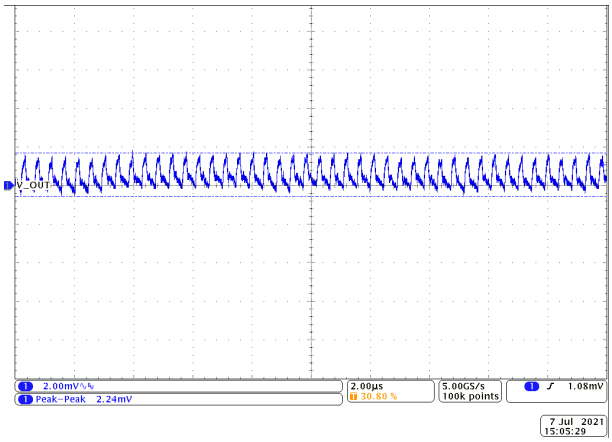

I_{OUT} = 15A V_{OUT} = 0.875V

Figure 9-13. Output Voltage Ripple

Copyright © 2025 Texas Instruments Incorporated

9.2.3 Application Curves (continued)

All application curves are obtained with L = 110nH (Coilcraft XGL4020-111ME) and f_{sw} = 2.25MHz, unless noted otherwise.

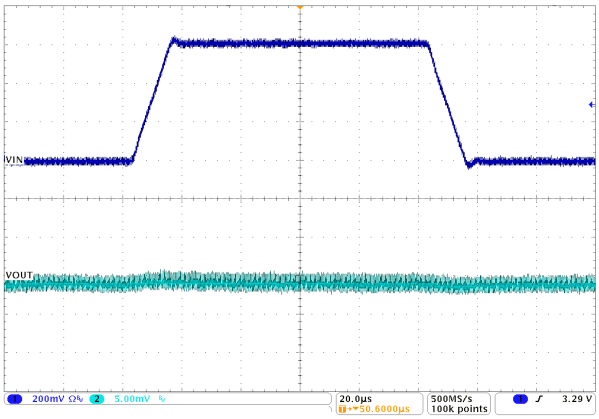

Figure 9-14. Line Transient Response

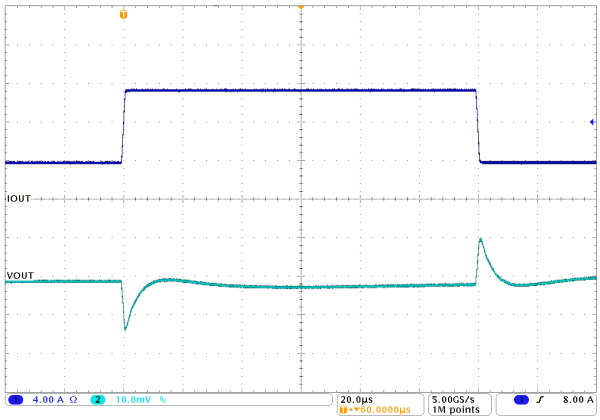

ΔI_{OUT} = 7.5A CH1 = 50mV/A

Figure 9-15. Load Transient Response

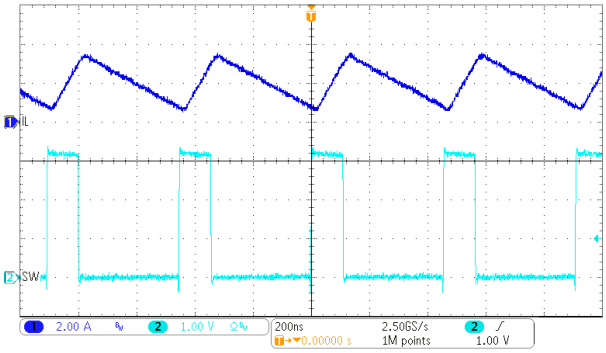

I_{OUT} = 2A

Figure 9-16. PWM-CCM Operation

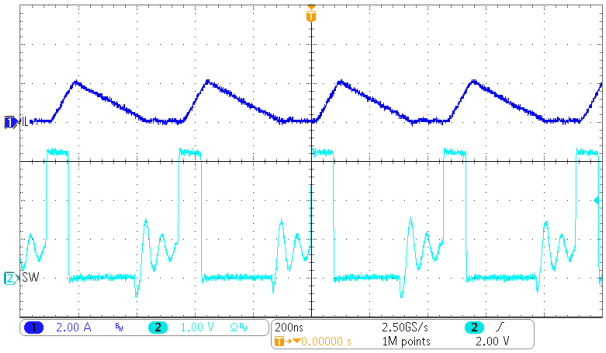

I_{OUT} = 750mA

Figure 9-17. PWM-DCM Operation

9.2.3 Application Curves (continued)

All application curves are obtained with L = 110nH (Coilcraft XGL4020-111ME) and f_{sw} = 2.25MHz, unless noted otherwise.

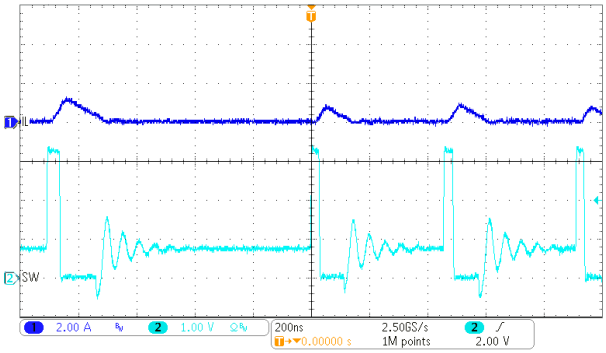

I_{OUT} = 75mA

Figure 9-18. PFM Operation

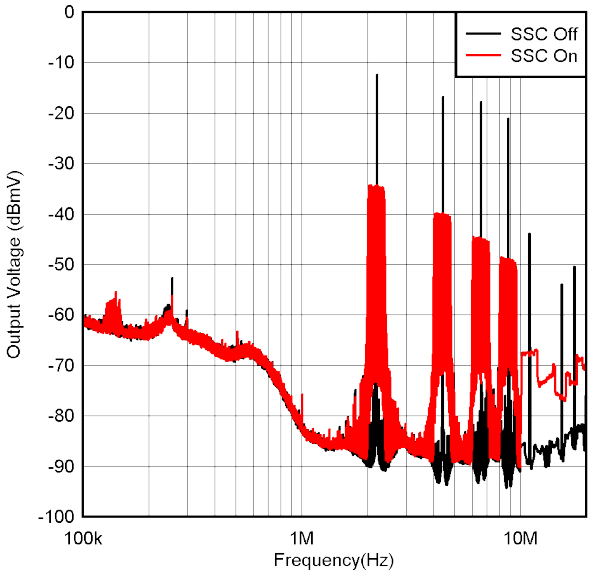

V_{OUT} = 0.75V I_{OUT} = 11.5A

Figure 9-19. Spread Spectrum Operation

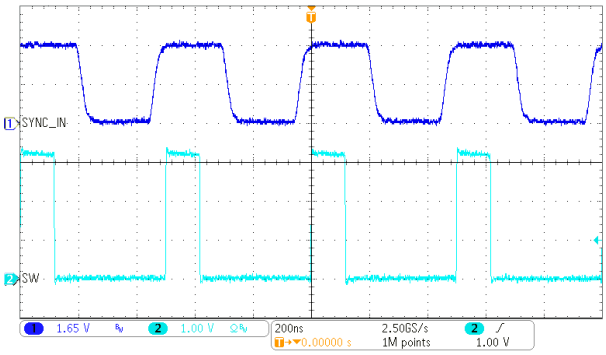

Load = 0.75Ω FSEL = 2.25MHz $f_{(SYNC)}$ = 2MHz

Figure 9-20. Synchronization to an External Clock

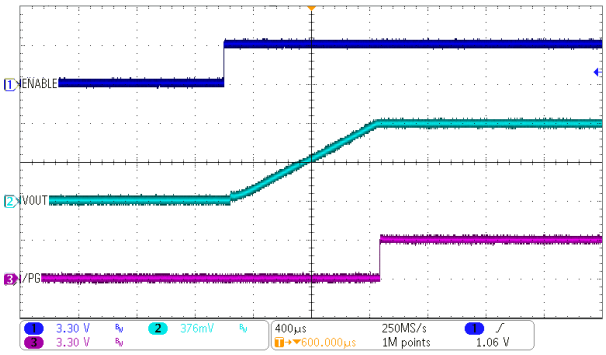

Load = 0.75Ω

Figure 9-21. Start-Up Using the EN Pin

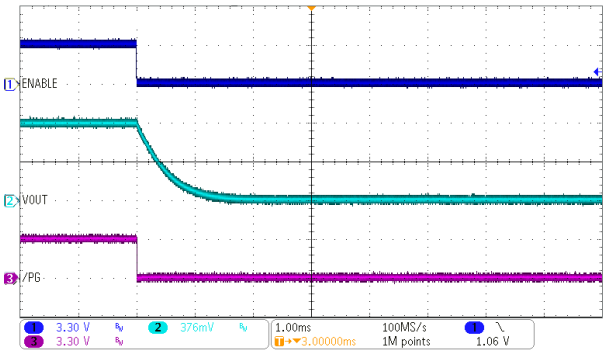

Load = 7.5Ω

Figure 9-22. Shutdown Using the EN Pin (Discharge Enabled)

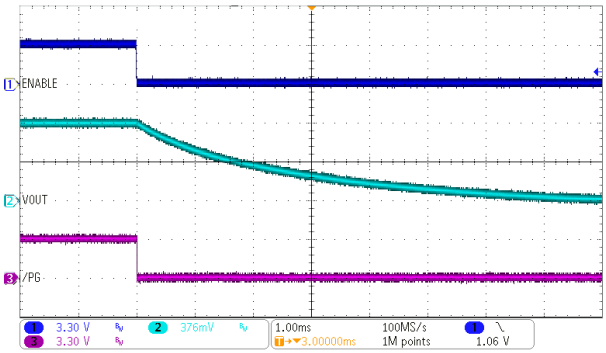

Load = 7.5Ω

Figure 9-23. Shutdown (Discharge disabled)

Copyright © 2025 Texas Instruments Incorporated

9.2.3 Application Curves (continued)

All application curves are obtained with L = 110nH (Coilcraft XGL4020-111ME) and f_{sw} = 2.25MHz, unless noted otherwise.

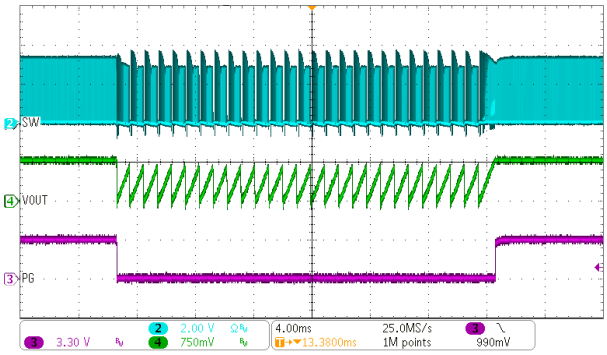

Figure 9-24. Current Limit (Hiccup)

9.3 Best Design Practices

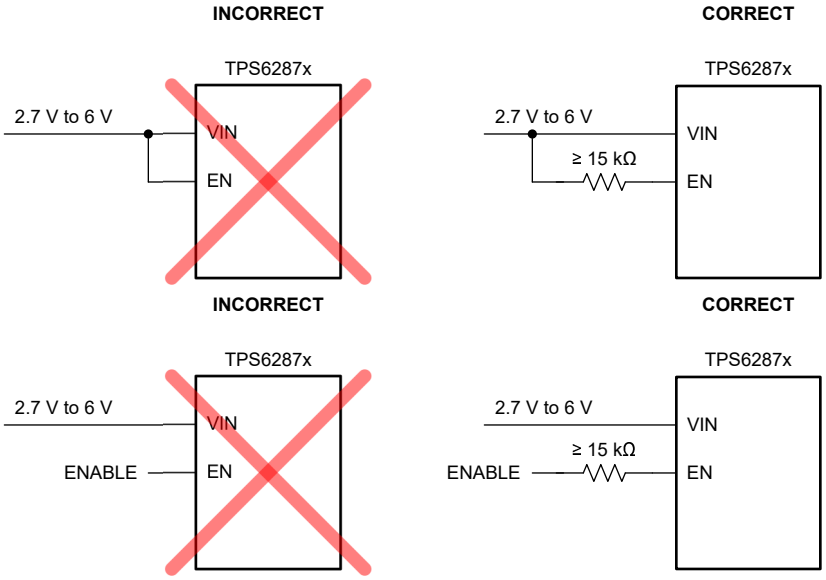

9.4 Power Supply Recommendations

The TPS6287x family has no special requirements for the input power supply. The output current rating of the input power supply must be rated according to the supply voltage and current requirements of the TPS6287x.

9.5 Layout

9.5.1 Layout Guidelines

Achieving the performance the TPS6287x devices are capable of requires proper PDN and PCB design. TI therefore recommends the user perform a power integrity analysis on the design. There are a number of commercially available power integrity software tools, and the user can use these tools to model the effects on performance of the PCB layout and passive components.

In addition to the use of power integrity tools, TI recommends the following basic principles:

- Place the input capacitors close to the VIN and GND pins. Position the input capacitors in order of increasing size, starting with the smallest capacitors closest to the VIN and GND pins. Use an identical layout for both VIN-GND pin pairs of the package, to gain maximum benefit from the butterfly configuration.

- Place the inductor close to the device and keep the SW node small.
- Connect the exposed thermal pad and the GND pins of the device together. Use multiple thermal vias to connect the exposed thermal pad of the device to one or more ground planes (TI's EVM uses nine 150µm thermal vias).
- Use multiple power and ground planes.
- Route the VOSNS and GOSNS remote sense lines as a differential pair and connect them to the lowest-impedance point of the PDN. If the desired connection point is not the lowest impedance point of the PDN, optimize the PDN until the desired connection point is the lowest impedance point of the PDN. Do not route the VOSNS and GOSNS close to any of the switch nodes.
- Connect the compensation components between COMP and GOSNS. Do not connect the compensation components directly to power ground.
- Use multiple vias to connect each capacitor pad to the power and ground planes (TI's EVM typically uses four vias per pad).
- Use plenty of stitching vias to make sure of a low impedance connection between different power and ground planes.
- Make sure that the capacitance located at the load is at least twice the amount of the capacitance located at the device.

9.5.2 Layout Example

Figure 9-25 shows the top layer of one of the evaluation modules for this device. The figure demonstrates the practical implementation of the PCB layout principles previously listed. The user can find a complete set drawings of all the layers used in this PCB in the evaluation module user's guide.

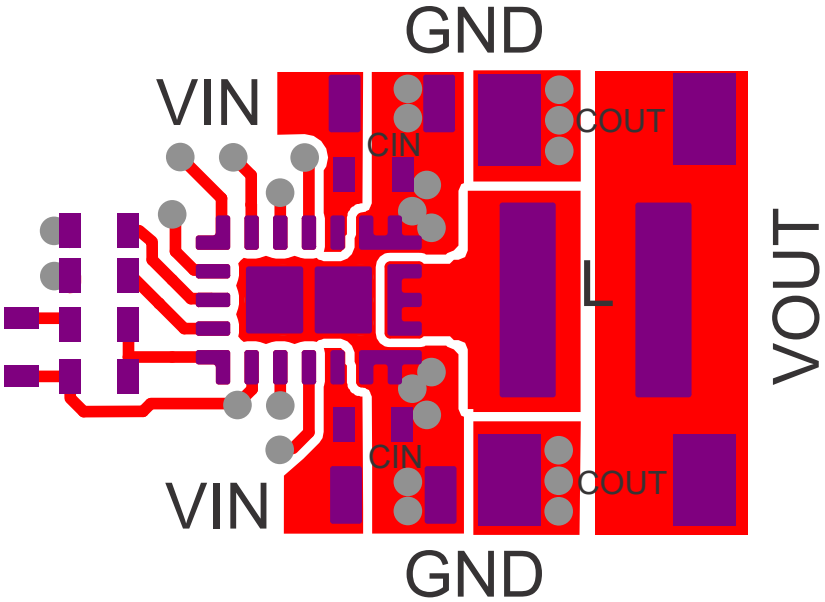

Figure 9-25. Layout Example

Copyright © 2025 Texas Instruments Incorporated

10 Device and Documentation Support

10.1 Device Support

10.1.1 Third-Party Products Disclaimer

TI'S PUBLICATION OF INFORMATION REGARDING THIRD-PARTY PRODUCTS OR SERVICES DOES NOT CONSTITUTE AN ENDORSEMENT REGARDING THE SUITABILITY OF SUCH PRODUCTS OR SERVICES OR A WARRANTY, REPRESENTATION OR ENDORSEMENT OF SUCH PRODUCTS OR SERVICES, EITHER ALONE OR IN COMBINATION WITH ANY TI PRODUCT OR SERVICE.

10.2 Receiving Notification of Documentation Updates

To receive notification of documentation updates, navigate to the device product folder on ti.com. Click on *Notifications* to register and receive a weekly digest of any product information that has changed. For change details, review the revision history included in any revised document.

10.3 Support Resources

TI E2E™ support forums are an engineer's go-to source for fast, verified answers and design help — straight from the experts. Search existing answers or ask your own question to get the quick design help you need.

Linked content is provided "AS IS" by the respective contributors. They do not constitute TI specifications and do not necessarily reflect TI's views; see TI's Terms of Use.

10.4 Trademarks

TI E2E™ is a trademark of Texas Instruments.
All trademarks are the property of their respective owners.

10.5 Electrostatic Discharge Caution

This integrated circuit can be damaged by ESD. Texas Instruments recommends that all integrated circuits be handled with appropriate precautions. Failure to observe proper handling and installation procedures can cause damage.

ESD damage can range from subtle performance degradation to complete device failure. Precision integrated circuits may be more susceptible to damage because very small parametric changes could cause the device not to meet its published specifications.

10.6 Glossary

TI Glossary — This glossary lists and explains terms, acronyms, and definitions.

11 Revision History

NOTE: Page numbers for previous revisions may differ from page numbers in the current version.

Changes from Revision D (September 2025) to Revision E (October 2025) — Page

- Updated the numbering format for tables, figures, and cross-references throughout the document..... 1
- Added TPS62873Z6WRXSR to the *Device Options* table..... 4

Changes from Revision C (January 2025) to Revision D (September 2025) — Page

- Added links to power-module products, added "Remote Sense" to document title, and added efficiency graph.....1
- Added table note (3) Contact TI for other start-up voltage or I^2C address options. 4
- Updated pin type for SCL pin into I (input) in Table 5-1 6
- Added COMP pin voltage and added SDA and EN pin currents in the *Absolute Maximum Ratings* table..... 8
- Added typical value of Parasitic Input Capacitance for SDA and SCL pins in parameter $C_{IN_SDA_SCL}$ 8
- Added table note (1) in I^2C *Timing Characteristics* table.....8
- Changed pin name from SYNCOUT into SYNC_OUT throughout the document..... 15

- Added Equation 1 to clarify t_{on}, changed Equation 2 into $I_{OUT(CCM-DCM)}$, and added Equation 3 for calculating $I_{OUT(PFM-DCM)}$ 17
- Changed VOUT[7:0] to VSET[7:0] 20
- Changed CONTROL1 into CONTROL2 23
- Added TPS6287xZ5 to Table 7-5, and changed VOUT[7:0] to VSET[7:0] 23
- Added description for EN pin during UVLO 26
- Added Figure 7-12 27
- Updated Table 7-7 by correcting the Vin condition in the 3rd row and adding a sub-row to explain that PG goes low when VOUT > VT+(OVP) or VOUT < VT-(UVP) and DVS inactive 27
- Added a description about device setting the PBUV or PBOV bits in case of an undervoltage or overvoltage event, and changed description about the behavior of the PG during DVS 27
- Added comment to explain that the common power-good signal must to have a pullup to a logic high level 30
- Updated description on initialization time interval, and clarified that functions I^2C, output discharge, and power good are available after completion of the device initialization 33
- Deleted the alternative I^2C addresses from Table 7-10 34
- Updated Figure 7-20 and Figure 7-21 (renamed Target Address into Device Address, and correct the number of bits for Device Address from 8 to 7) 36
- Changed $t_{d(EN)}$ to $t_{d(EN)2}$ 37
- Added (from 3.8A to 11.3A) to ΔI_{OUT} in Table 9-1 44
- Added clarification on I_{OUT} in Equation 11 45
- Updated Equation 20 to recalculate the BW_{inner} by using 406µF as max Cout value, and updated Equation 23 based on recalculated BW_{inner} 48
- Changed value of optional C_{C2} from 1pF to 10pF 48
- Added comment that all curves are obtained with L = 110nH (Coilcraft XGL4020-111ME) and f_{sw} = 2.25MHz, unless noted otherwise 49

12 Mechanical, Packaging, and Orderable Information

The following pages include mechanical, packaging, and orderable information. This information is the most current data available for the designated devices. This data is subject to change without notice and revision of this document. For browser-based versions of this data sheet, refer to the left-hand navigation.

Copyright © 2025 Texas Instruments Incorporated

PACKAGING INFORMATION

Orderable part number	Status (1)	Material type (2)	Package | Pins	Package qty | Carrier	RoHS (3)	Lead finish/ Ball material (4)	MSL rating/ Peak reflow (5)	Op temp (°C)	Part marking (6)
TPS62870Z0WRXSR	Active	Production	VQFN-FCRLF (RXS) | 16	3000 | LARGE T&R	Yes	NIPDAU	Level-2-260C-1 YEAR	-40 to 125	870Z0B
TPS62870Z0WRXSR.A	Active	Production	VQFN-FCRLF (RXS) | 16	3000 | LARGE T&R	Yes	NIPDAU	Level-2-260C-1 YEAR	-40 to 125	870Z0B
TPS62870Z4WRXSR	Active	Production	VQFN-FCRLF (RXS) | 16	3000 | LARGE T&R	Yes	NIPDAU	Level-2-260C-1 YEAR	-40 to 125	870Z4B
TPS62871Z0WRXSR	Active	Production	VQFN-FCRLF (RXS) | 16	3000 | LARGE T&R	Yes	NIPDAU	Level-2-260C-1 YEAR	-40 to 125	871Z0B
TPS62871Z0WRXSR.A	Active	Production	VQFN-FCRLF (RXS) | 16	3000 | LARGE T&R	Yes	NIPDAU	Level-2-260C-1 YEAR	-40 to 125	871Z0B
TPS62871Z2WRXSR	Active	Production	VQFN-FCRLF (RXS) | 16	3000 | LARGE T&R	Yes	NIPDAU	Level-2-260C-1 YEAR	-40 to 125	871Z2B
TPS62871Z2WRXSR.A	Active	Production	VQFN-FCRLF (RXS) | 16	3000 | LARGE T&R	Yes	NIPDAU	Level-2-260C-1 YEAR	-40 to 125	871Z2B
TPS62871Z4WRXSR	Active	Production	VQFN-FCRLF (RXS) | 16	3000 | LARGE T&R	Yes	NIPDAU	Level-2-260C-1 YEAR	-40 to 125	871Z4B
TPS62871Z4WRXSR.A	Active	Production	VQFN-FCRLF (RXS) | 16	3000 | LARGE T&R	Yes	NIPDAU	Level-2-260C-1 YEAR	-40 to 125	871Z4B
TPS62872Z0WRXSR	Active	Production	VQFN-FCRLF (RXS) | 16	3000 | LARGE T&R	Yes	NIPDAU	Level-2-260C-1 YEAR	-40 to 125	872Z0B
TPS62872Z0WRXSR.A	Active	Production	VQFN-FCRLF (RXS) | 16	3000 | LARGE T&R	Yes	NIPDAU	Level-2-260C-1 YEAR	-40 to 125	872Z0B
TPS62872Z2WRXSR	Active	Production	VQFN-FCRLF (RXS) | 16	3000 | LARGE T&R	Yes	NIPDAU	Level-2-260C-1 YEAR	-40 to 125	872Z2B
TPS62872Z2WRXSR.A	Active	Production	VQFN-FCRLF (RXS) | 16	3000 | LARGE T&R	Yes	NIPDAU	Level-2-260C-1 YEAR	-40 to 125	872Z2B
TPS62872Z4WRXSR	Active	Production	VQFN-FCRLF (RXS) | 16	3000 | LARGE T&R	Yes	NIPDAU	Level-2-260C-1 YEAR	-40 to 125	872Z4B
TPS62872Z4WRXSR.A	Active	Production	VQFN-FCRLF (RXS) | 16	3000 | LARGE T&R	Yes	NIPDAU	Level-2-260C-1 YEAR	-40 to 125	872Z4B
TPS62873Z0WRXSR	Active	Production	VQFN-FCRLF (RXS) | 16	3000 | LARGE T&R	Yes	NIPDAU	Level-2-260C-1 YEAR	-40 to 125	873Z0B

Orderable part number	Status (1)	Material type (2)	Package | Pins	Package qty | Carrier	RoHS (3)	Lead finish/ Ball material (4)	MSL rating/ Peak reflow (5)	Op temp (°C)	Part marking (6)
TPS62873Z0WRXSR.A	Active	Production	VQFN-FCRLF (RXS) | 16	3000 | LARGE T&R	Yes	NIPDAU	Level-2-260C-1 YEAR	-40 to 125	873Z0B
TPS62873Z1WRXSR	Active	Production	VQFN-FCRLF (RXS) | 16	3000 | LARGE T&R	Yes	NIPDAU	Level-2-260C-1 YEAR	-40 to 125	873Z1B
TPS62873Z1WRXSR.A	Active	Production	VQFN-FCRLF (RXS) | 16	3000 | LARGE T&R	Yes	NIPDAU	Level-2-260C-1 YEAR	-40 to 125	873Z1B
TPS62873Z2WRXSR	Active	Production	VQFN-FCRLF (RXS) | 16	3000 | LARGE T&R	Yes	NIPDAU	Level-2-260C-1 YEAR	-40 to 125	873Z2B
TPS62873Z2WRXSR.A	Active	Production	VQFN-FCRLF (RXS) | 16	3000 | LARGE T&R	Yes	NIPDAU	Level-2-260C-1 YEAR	-40 to 125	873Z2B
TPS62873Z4WRXSR	Active	Production	VQFN-FCRLF (RXS) | 16	3000 | LARGE T&R	Yes	NIPDAU	Level-2-260C-1 YEAR	-40 to 125	873Z4B
TPS62873Z4WRXSR.A	Active	Production	VQFN-FCRLF (RXS) | 16	3000 | LARGE T&R	Yes	NIPDAU	Level-2-260C-1 YEAR	-40 to 125	873Z4B
TPS62873Z5WRXSR	Active	Production	VQFN-FCRLF (RXS) | 16	3000 | LARGE T&R	Yes	NIPDAU	Level-2-260C-1 YEAR	-40 to 125	873Z5B

(1) **Status:** For more details on status, see our product life cycle.

(2) **Material type:** When designated, preproduction parts are prototypes/experimental devices, and are not yet approved or released for full production. Testing and final process, including without limitation quality assurance, reliability performance testing, and/or process qualification, may not yet be complete, and this item is subject to further changes or possible discontinuation. If available for ordering, purchases will be subject to an additional waiver at checkout, and are intended for early internal evaluation purposes only. These items are sold without warranties of any kind.

(3) **RoHS values:** Yes, No, RoHS Exempt. See the TI RoHS Statement for additional information and value definition.

(4) **Lead finish/Ball material:** Parts may have multiple material finish options. Finish options are separated by a vertical ruled line. Lead finish/Ball material values may wrap to two lines if the finish value exceeds the maximum column width.

(5) **MSL rating/Peak reflow:** The moisture sensitivity level ratings and peak solder (reflow) temperatures. In the event that a part has multiple moisture sensitivity ratings, only the lowest level per JEDEC standards is shown. Refer to the shipping label for the actual reflow temperature that will be used to mount the part to the printed circuit board.

(6) **Part marking:** There may be an additional marking, which relates to the logo, the lot trace code information, or the environmental category of the part.

Multiple part markings will be inside parentheses. Only one part marking contained in parentheses and separated by a "~" will appear on a part. If a line is indented then it is a continuation of the previous line and the two combined represent the entire part marking for that device.

Important Information and Disclaimer: The information provided on this page represents TI's knowledge and belief as of the date that it is provided. TI bases its knowledge and belief on information provided by third parties, and makes no representation or warranty as to the accuracy of such information. Efforts are underway to better integrate information from third parties. TI has taken and continues to take reasonable steps to provide representative and accurate information but may not have conducted destructive testing or chemical analysis on incoming materials and chemicals. TI and TI suppliers consider certain information to be proprietary, and thus CAS numbers and other limited information may not be available for release.

In no event shall TI's liability arising out of such information exceed the total purchase price of the TI part(s) at issue in this document sold by TI to Customer on an annual basis.

OTHER QUALIFIED VERSIONS OF TPS62870, TPS62871, TPS62872, TPS62873 :

- Automotive : TPS62870-Q1, TPS62871-Q1, TPS62872-Q1, TPS62873-Q1

NOTE: Qualified Version Definitions:

- Automotive - Q100 devices qualified for high-reliability automotive applications targeting zero defects

TAPE AND REEL INFORMATION

REEL DIMENSIONS

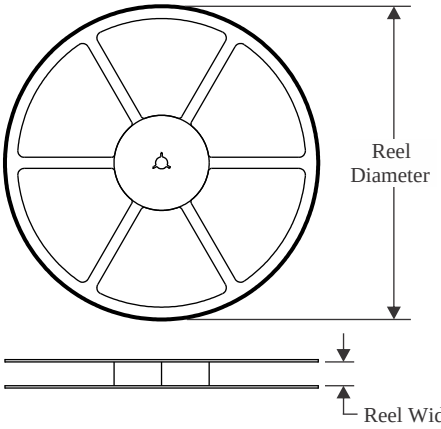

TAPE DIMENSIONS

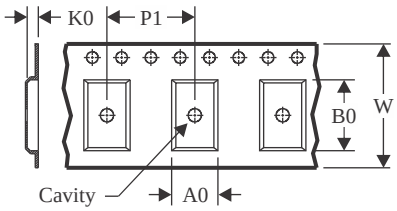

A0	Dimension designed to accommodate the component width
B0	Dimension designed to accommodate the component length
K0	Dimension designed to accommodate the component thickness
W	Overall width of the carrier tape
P1	Pitch between successive cavity centers

QUADRANT ASSIGNMENTS FOR PIN 1 ORIENTATION IN TAPE

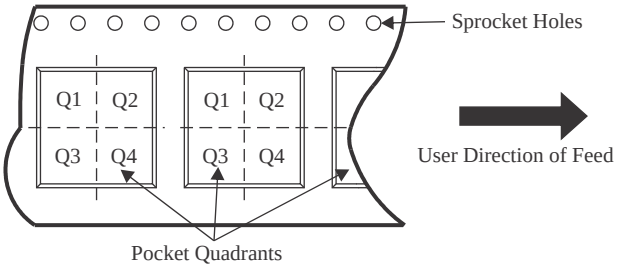

*All dimensions are nominal

Device	Package Type	Package Drawing	Pins	SPQ	Reel Diameter (mm)	Reel Width W1 (mm)	A0 (mm)	B0 (mm)	K0 (mm)	P1 (mm)	W (mm)	Pin1 Quadrant
TPS62870Z0WRXSR	VQFN-FCRLF	RXS	16	3000	330.0	12.4	2.8	3.8	1.2	4.0	12.0	Q1
TPS62870Z0WRXSR	VQFN-FCRLF	RXS	16	3000	330.0	12.4	2.85	3.85	1.3	4.0	12.0	Q1
TPS62870Z4WRXSR	VQFN-FCRLF	RXS	16	3000	330.0	12.4	2.8	3.8	1.2	4.0	12.0	Q1
TPS62870Z4WRXSR	VQFN-FCRLF	RXS	16	3000	330.0	12.4	2.85	3.85	1.3	4.0	12.0	Q1
TPS62871Z0WRXSR	VQFN-FCRLF	RXS	16	3000	330.0	12.4	2.8	3.8	1.2	4.0	12.0	Q1
TPS62871Z0WRXSR	VQFN-FCRLF	RXS	16	3000	330.0	12.4	2.85	3.85	1.3	4.0	12.0	Q1
TPS62871Z2WRXSR	VQFN-FCRLF	RXS	16	3000	330.0	12.4	2.85	3.85	1.3	4.0	12.0	Q1
TPS62871Z2WRXSR	VQFN-FCRLF	RXS	16	3000	330.0	12.4	2.8	3.8	1.2	4.0	12.0	Q1
TPS62871Z4WRXSR	VQFN-FCRLF	RXS	16	3000	330.0	12.4	2.85	3.85	1.3	4.0	12.0	Q1

Device	Package Type	Package Drawing	Pins	SPQ	Reel Diameter (mm)	Reel Width W1 (mm)	A0 (mm)	B0 (mm)	K0 (mm)	P1 (mm)	W (mm)	Pin1 Quadrant
TPS62871Z4WRXSR	VQFN-FCRLF	RXS	16	3000	330.0	12.4	2.8	3.8	1.2	4.0	12.0	Q1
TPS62872Z0WRXSR	VQFN-FCRLF	RXS	16	3000	330.0	12.4	2.85	3.85	1.3	4.0	12.0	Q1
TPS62872Z0WRXSR	VQFN-FCRLF	RXS	16	3000	330.0	12.4	2.8	3.8	1.2	4.0	12.0	Q1
TPS62872Z2WRXSR	VQFN-FCRLF	RXS	16	3000	330.0	12.4	2.85	3.85	1.3	4.0	12.0	Q1
TPS62872Z2WRXSR	VQFN-FCRLF	RXS	16	3000	330.0	12.4	2.8	3.8	1.2	4.0	12.0	Q1
TPS62872Z4WRXSR	VQFN-FCRLF	RXS	16	3000	330.0	12.4	2.8	3.8	1.2	4.0	12.0	Q1
TPS62872Z4WRXSR	VQFN-FCRLF	RXS	16	3000	330.0	12.4	2.85	3.85	1.3	4.0	12.0	Q1
TPS62873Z0WRXSR	VQFN-FCRLF	RXS	16	3000	330.0	12.4	2.85	3.85	1.3	4.0	12.0	Q1
TPS62873Z0WRXSR	VQFN-FCRLF	RXS	16	3000	330.0	12.4	2.8	3.8	1.2	4.0	12.0	Q1
TPS62873Z1WRXSR	VQFN-FCRLF	RXS	16	3000	330.0	12.4	2.85	3.85	1.3	4.0	12.0	Q1
TPS62873Z1WRXSR	VQFN-FCRLF	RXS	16	3000	330.0	12.4	2.8	3.8	1.2	4.0	12.0	Q1
TPS62873Z2WRXSR	VQFN-FCRLF	RXS	16	3000	330.0	12.4	2.85	3.85	1.3	4.0	12.0	Q1
TPS62873Z2WRXSR	VQFN-FCRLF	RXS	16	3000	330.0	12.4	2.8	3.8	1.2	4.0	12.0	Q1
TPS62873Z4WRXSR	VQFN-FCRLF	RXS	16	3000	330.0	12.4	2.8	3.8	1.2	4.0	12.0	Q1
TPS62873Z4WRXSR	VQFN-FCRLF	RXS	16	3000	330.0	12.4	2.85	3.85	1.3	4.0	12.0	Q1
TPS62873Z5WRXSR	VQFN-FCRLF	RXS	16	3000	330.0	12.4	2.85	3.85	1.3	4.0	12.0	Q1
TPS62873Z5WRXSR	VQFN-FCRLF	RXS	16	3000	330.0	12.4	2.8	3.8	1.2	4.0	12.0	Q1

TAPE AND REEL BOX DIMENSIONS

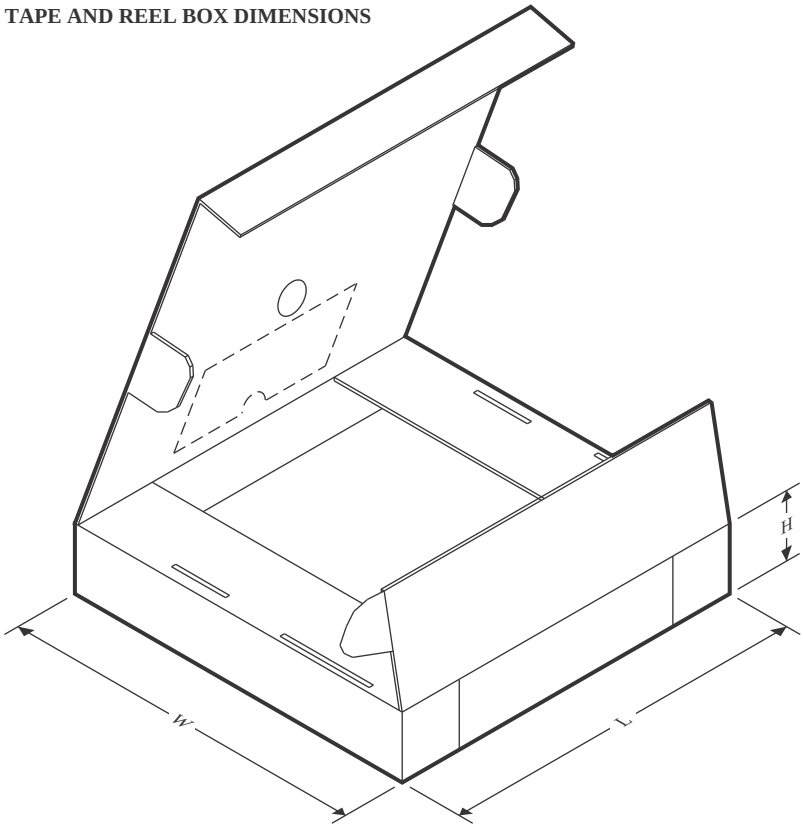

*All dimensions are nominal

Device	Package Type	Package Drawing	Pins	SPQ	Length (mm)	Width (mm)	Height (mm)
TPS62870Z0WRXSR	VQFN-FCRLF	RXS	16	3000	338.0	355.0	35.0
TPS62870Z0WRXSR	VQFN-FCRLF	RXS	16	3000	346.0	346.0	33.0
TPS62870Z4WRXSR	VQFN-FCRLF	RXS	16	3000	338.0	355.0	35.0
TPS62870Z4WRXSR	VQFN-FCRLF	RXS	16	3000	346.0	346.0	33.0
TPS62871Z0WRXSR	VQFN-FCRLF	RXS	16	3000	338.0	355.0	35.0
TPS62871Z0WRXSR	VQFN-FCRLF	RXS	16	3000	346.0	346.0	33.0
TPS62871Z2WRXSR	VQFN-FCRLF	RXS	16	3000	346.0	346.0	33.0
TPS62871Z2WRXSR	VQFN-FCRLF	RXS	16	3000	338.0	355.0	35.0
TPS62871Z4WRXSR	VQFN-FCRLF	RXS	16	3000	346.0	346.0	33.0
TPS62871Z4WRXSR	VQFN-FCRLF	RXS	16	3000	338.0	355.0	35.0
TPS62872Z0WRXSR	VQFN-FCRLF	RXS	16	3000	346.0	346.0	33.0
TPS62872Z0WRXSR	VQFN-FCRLF	RXS	16	3000	338.0	355.0	35.0
TPS62872Z2WRXSR	VQFN-FCRLF	RXS	16	3000	346.0	346.0	33.0
TPS62872Z2WRXSR	VQFN-FCRLF	RXS	16	3000	338.0	355.0	35.0
TPS62872Z4WRXSR	VQFN-FCRLF	RXS	16	3000	338.0	355.0	35.0
TPS62872Z4WRXSR	VQFN-FCRLF	RXS	16	3000	346.0	346.0	33.0
TPS62873Z0WRXSR	VQFN-FCRLF	RXS	16	3000	346.0	346.0	33.0
TPS62873Z0WRXSR	VQFN-FCRLF	RXS	16	3000	338.0	355.0	35.0

Device	Package Type	Package Drawing	Pins	SPQ	Length (mm)	Width (mm)	Height (mm)
TPS62873Z1WRXSR	VQFN-FCRLF	RXS	16	3000	346.0	346.0	33.0
TPS62873Z1WRXSR	VQFN-FCRLF	RXS	16	3000	338.0	355.0	35.0
TPS62873Z2WRXSR	VQFN-FCRLF	RXS	16	3000	346.0	346.0	33.0
TPS62873Z2WRXSR	VQFN-FCRLF	RXS	16	3000	338.0	355.0	35.0
TPS62873Z4WRXSR	VQFN-FCRLF	RXS	16	3000	338.0	355.0	35.0
TPS62873Z4WRXSR	VQFN-FCRLF	RXS	16	3000	346.0	346.0	33.0
TPS62873Z5WRXSR	VQFN-FCRLF	RXS	16	3000	346.0	346.0	33.0
TPS62873Z5WRXSR	VQFN-FCRLF	RXS	16	3000	338.0	355.0	35.0

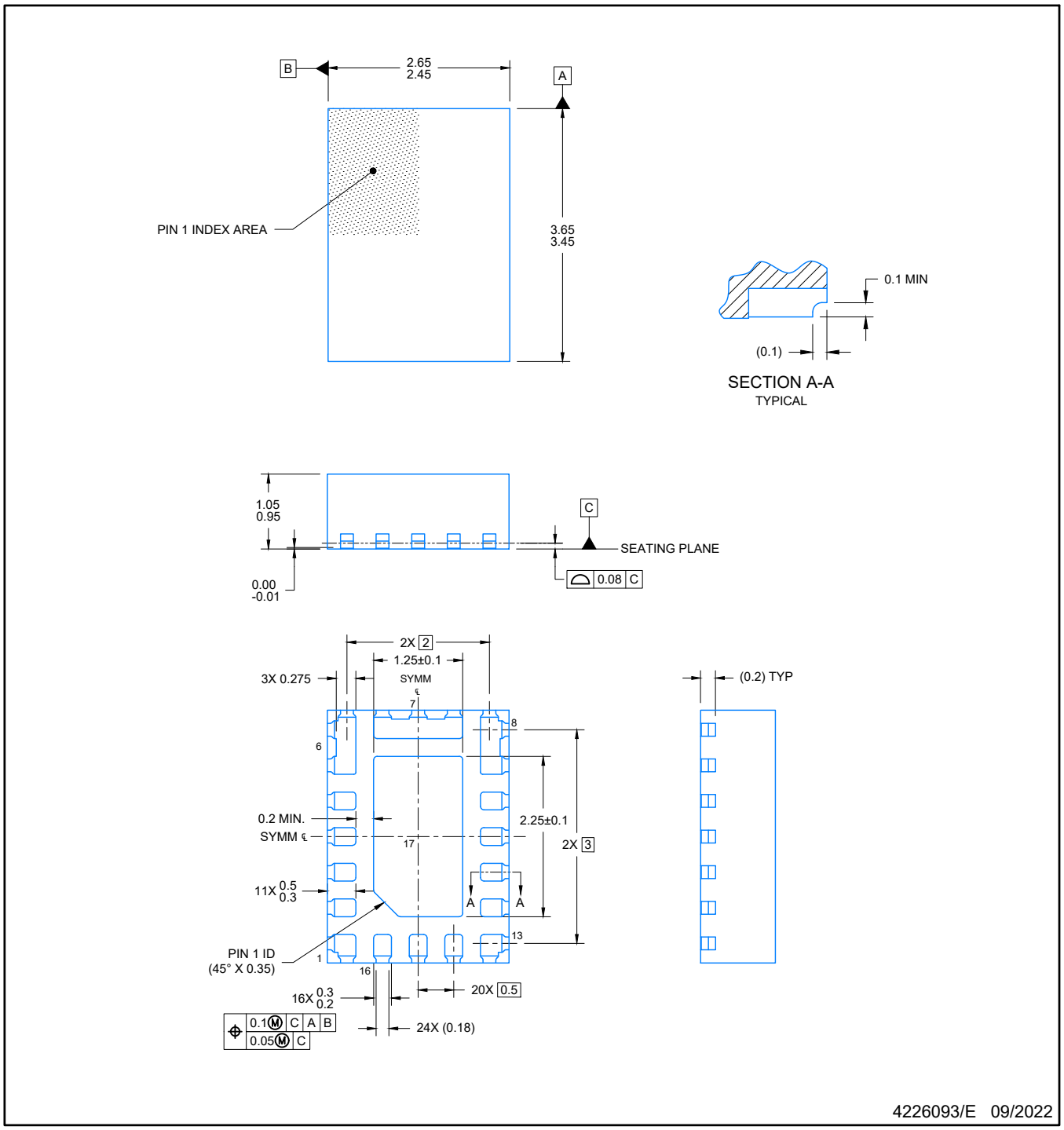

NOTES:

1. All linear dimensions are in millimeters. Any dimensions in parenthesis are for reference only. Dimensioning and tolerancing per ASME Y14.5M.
2. This drawing is subject to change without notice.
3. The package thermal pad must be soldered to the printed circuit board for optimal thermal and mechanical performance.

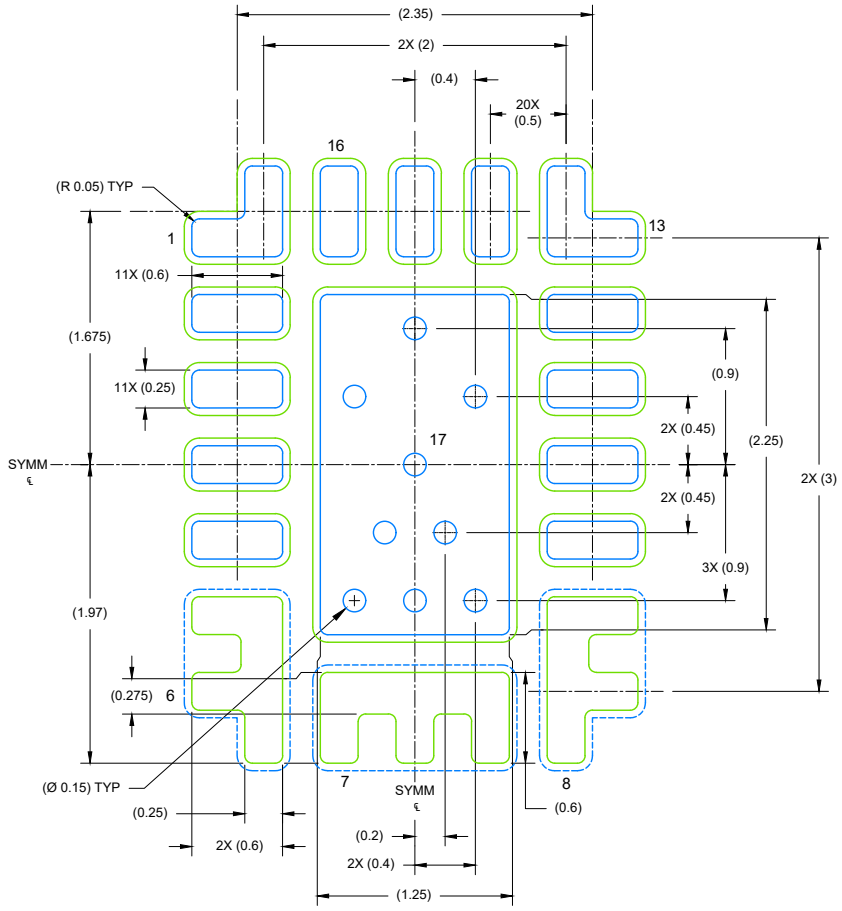

LAND PATTERN EXAMPLE
EXPOSED METAL SHOWN
SCALE: 15X

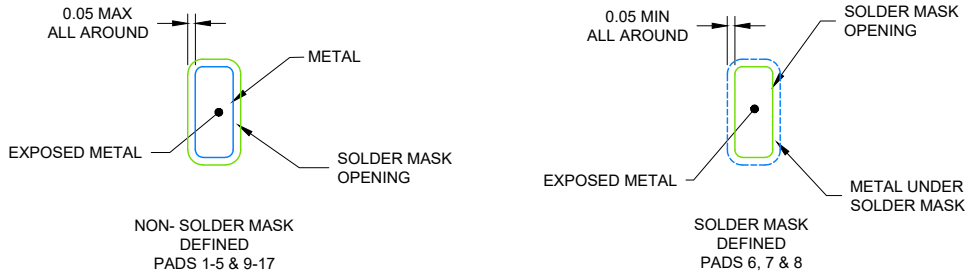

SOLDER MASK DETAILS

4226093/E 09/2022

NOTES: (continued)

4. This package is designed to be soldered to a thermal pad on the board. For more information, see Texas Instruments literature number SLUA271 (www.ti.com/lit/slua271).
5. Vias are optional depending on application, refer to device data sheet. If any vias are implemented, refer to their locations shown on this view. It is recommended that vias under paste be filled, plugged or tented.

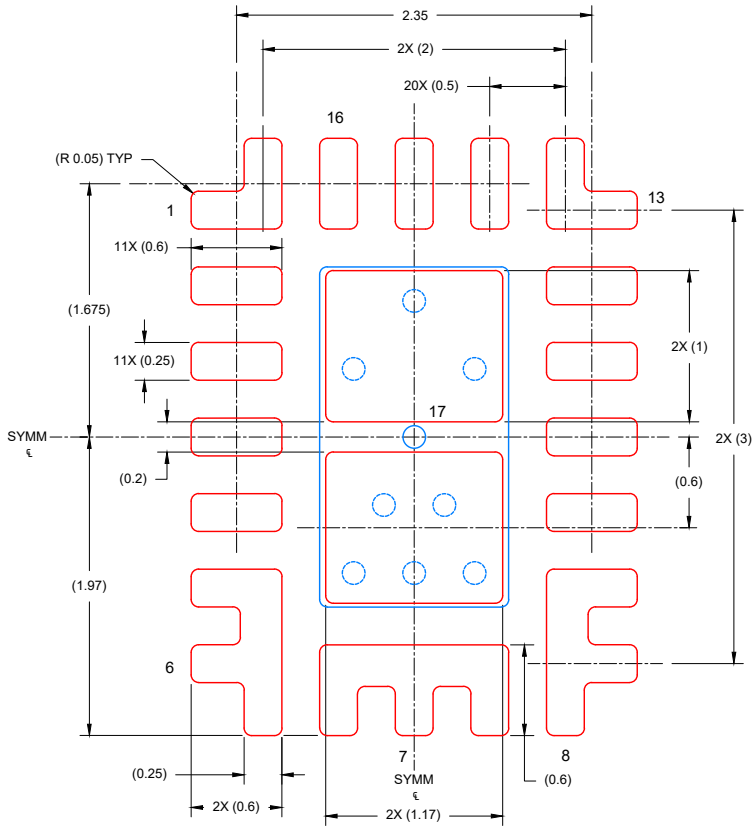

SOLDER PASTE EXAMPLE
BASED ON 0.1 mm THICK STENCIL

SCALE: 15X

4226093/E 09/2022

NOTES: (continued)

6. Laser cutting apertures with trapezoidal walls and rounded corners may offer better paste release. IPC-7525 may have alternate design recommendations.

IMPORTANT NOTICE AND DISCLAIMER

TI PROVIDES TECHNICAL AND RELIABILITY DATA (INCLUDING DATASHEETS), DESIGN RESOURCES (INCLUDING REFERENCE DESIGNS), APPLICATION OR OTHER DESIGN ADVICE, WEB TOOLS, SAFETY INFORMATION, AND OTHER RESOURCES “AS IS” AND WITH ALL FAULTS, AND DISCLAIMS ALL WARRANTIES, EXPRESS AND IMPLIED, INCLUDING WITHOUT LIMITATION ANY IMPLIED WARRANTIES OF MERCHANTABILITY, FITNESS FOR A PARTICULAR PURPOSE OR NON-INFRINGEMENT OF THIRD PARTY INTELLECTUAL PROPERTY RIGHTS.

These resources are intended for skilled developers designing with TI products. You are solely responsible for (1) selecting the appropriate TI products for your application, (2) designing, validating and testing your application, and (3) ensuring your application meets applicable standards, and any other safety, security, regulatory or other requirements.

These resources are subject to change without notice. TI grants you permission to use these resources only for development of an application that uses the TI products described in the resource. Other reproduction and display of these resources is prohibited. No license is granted to any other TI intellectual property right or to any third party intellectual property right. TI disclaims responsibility for, and you fully indemnify TI and its representatives against any claims, damages, costs, losses, and liabilities arising out of your use of these resources.

TI’s products are provided subject to TI’s Terms of Sale, TI’s General Quality Guidelines, or other applicable terms available either on ti.com or provided in conjunction with such TI products. TI’s provision of these resources does not expand or otherwise alter TI’s applicable warranties or warranty disclaimers for TI products. Unless TI explicitly designates a product as custom or customer-specified, TI products are standard, catalog, general purpose devices.

TI objects to and rejects any additional or different terms you may propose.

Copyright © 2026, Texas Instruments Incorporated

Last updated 10/2025