TPS65023-Q1 Power Management IC (PMIC) With 3 DC/DCs, 3 LDOs, I²C Interface and DVS

1 Features

- Qualified for Automotive Applications
- AEC-Q100 Qualified With the Following Results:
  - Device Temperature Grade 1: –40°C to 125°C Ambient Operating Temperature Range
  - Device HBM ESD Classification Level 2
  - Device CDM ESD Classification Level C4A (RHA Package) or C5 (RSB Package)
- 1.5 A, 90% Efficient Step-Down Converter for Processor Core (VDCDC1)
- 1.2 A, Up to 95% Efficient Step-Down Converter for System Voltage (VDCDC2)
- 1 A, 92% Efficient Step-Down Converter for Memory Voltage (VDCDC3)
- 30 mA LDO/Switch for Real Time Clock (VRTC)
- 2 × 200 mA General-Purpose Low Dropout (LDO)
- Dynamic Voltage Management for Processor Core
- Preselectable LDO Voltage Using Two Digital Input Pins
- Externally Adjustable Reset Delay Time
- Battery Backup Functionality
- Separate Enable Pins for Inductive Converters
- I²C-Compatible Serial Interface
- 85-µA Quiescent Current
- Low-Ripple Pulse-Frequency Modulation (PFM) Mode
- Thermal Shutdown Protection

2 Applications

- Automotive Clusters
- Automotive Infotainment Systems
- Digital Radios
- Supply DaVinci™ Digital Signal Processor (DSP) Family Solutions

3 Description

The TPS65023-Q1 device is an integrated power-management integrated circuit (IC) for applications powered by one Li-Ion or Li-Polymer cell, which require multiple power rails. The TPS65023-Q1 device provides three highly efficient, step-down converters targeted at providing the core voltage, peripheral, input and output (I/O), and memory rails in a processor-based system. The core converter allows for on-the-fly voltage changes through a serial interface, allowing the system to implement dynamic power savings. All three step-down converters enter a low-power mode at light load for maximum efficiency across the widest possible range of load currents.

Device Information(1)

PART NUMBER	PACKAGE	BODY SIZE (NOM)
TPS65023-Q1	VQFN (40)	6.00 mm × 6.00 mm
	WQFN (40)	5.00 mm × 5.00 mm

(1) For all available packages, see the orderable addendum at the end of the data sheet.

Simplified Schematic

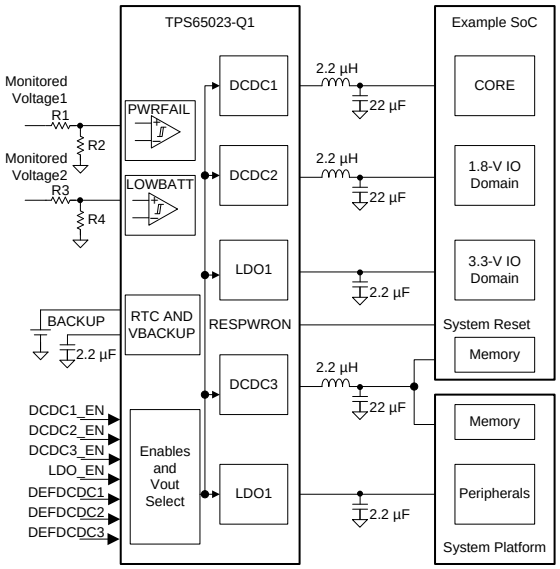

An IMPORTANT NOTICE at the end of this data sheet addresses availability, warranty, changes, use in safety-critical applications, intellectual property matters and other important disclaimers. PRODUCTION DATA.

Table of Contents

1 Features ... 1
2 Applications ... 1
3 Description ... 1
4 Revision History ... 2
5 Description (continued) ... 3
6 Pin Configuration and Functions ... 3
7 Specifications ... 5
7.1 Absolute Maximum Ratings ... 5
7.2 ESD Ratings ... 5
7.3 Recommended Operating Conditions ... 6
7.4 Thermal Information ... 6
7.5 Electrical Characteristics ... 7
7.6 Timing Requirements ... 10
7.7 Typical Characteristics ... 11
8 Detailed Description ... 16
8.1 Overview ... 16
8.2 Functional Block Diagram ... 16
8.3 Feature Description ... 17
8.4 Device Functional Modes ... 18
8.5 Programming ... 22
8.6 Register Maps ... 24
9 Application and Implementation ... 31
9.1 Application Information ... 31
9.2 Typical Application ... 33
10 Power Supply Recommendations ... 37
11 Layout ... 38
11.1 Layout Guidelines ... 38
11.2 Layout Example ... 38
12 Device and Documentation Support ... 39
12.1 Device Support ... 39
12.2 Documentation Support ... 39
12.3 Receiving Notification of Documentation Updates 39
12.4 Community Resources ... 39
12.5 Trademarks ... 39
12.6 Electrostatic Discharge Caution ... 39
12.7 Glossary ... 39
13 Mechanical, Packaging, and Orderable Information ... 39

4 Revision History

NOTE: Page numbers for previous revisions may differ from page numbers in the current version.

Changes from Revision E (March 2016) to Revision F	Page
• Changed the title of the data sheet	1
• Changed all references of PowerPAD to thermal pad	4
• Changed the units of the current and peak current parameters from V to mA in the *Absolute Maximum Ratings* table	5
• Added the *Receiving Notification of Documentation Updates* section	39

Changes from Revision D (September 2011) to Revision E	Page
• Added *Device Information* table, *Table of Contents*, *Revision History* section, *Pin Configuration and Functions* section, *Specifications* section, *ESD Ratings* table, *Detailed Description* section, *Application and Implementation* section, *Power Supply Recommendations* section, *Layout* section, *Device and Documentation Support* section, and *Mechanical, Packaging, and Orderable Information* section	1

Copyright © 2009–2018, Texas Instruments Incorporated

5 Description (continued)

The TPS65023-Q1 device also integrates two general-purpose 200-mA LDO voltage regulators, which are enabled with an external input pin. Each LDO operates with an input voltage range between 1.5 V and 6.5 V, allowing them to be supplied from one of the step-down converters or directly from the battery. The default output voltage of the LDOs can be digitally set to four different voltage combinations using the DEFLDO1 and DEFLDO2 pins. The serial interface can be used for dynamic voltage scaling, masking interrupts, or for disabling, enabling, and setting the LDO output voltages. The interface is compatible with the fast- or standard-mode I^2C specifications, allowing transfers at up to 400 kHz. The TPS65023-Q1 device operates over a free-air temperature of –40°C to 125°C.

6 Pin Configuration and Functions

RHA and RSB Packages
40-Pin VQFN and WQFN
Top View

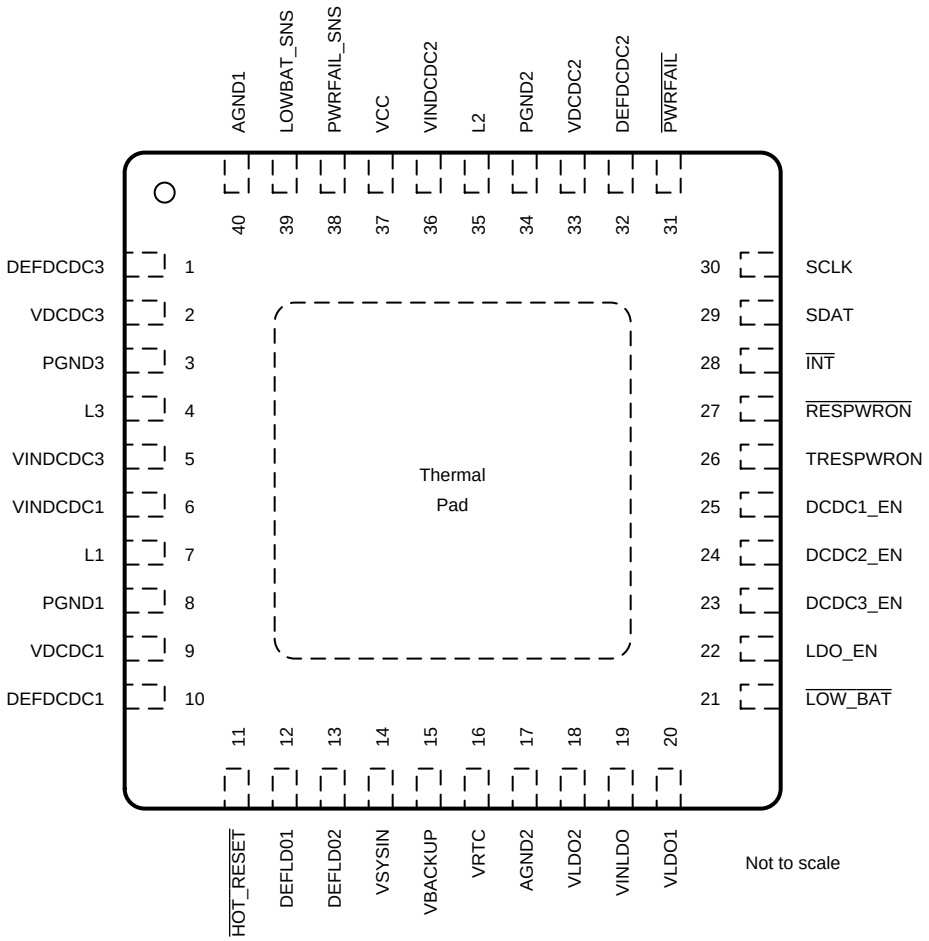

Pin Functions

PIN		I/O	DESCRIPTION
NAME	NO.		
SWITCHING REGULATOR			
AGND1	40	—	Analog ground. All analog ground pins are connected internally on the chip
AGND2	17	—	Analog ground. All analog ground pins are connected internally on the chip
DCDC1_EN	25	I	VDCDC1 enable pin. A logic high enables the regulator, a logic low disables the regulator
DCDC2_EN	24	I	VDCDC2 enable pin. A logic high enables the regulator, a logic low disables the regulator
DCDC3_EN	23	I	VDCDC3 enable pin. A logic high enables the regulator, a logic low disables the regulator
DEFDCDC1	10	I	Input for signal indicating default VDCDC1 voltage, 0 = 1.2 V, 1 = 1.6 V. DEFDCDC1 can also be connected to a resistor divider between VDCDC1 and GND, if the output voltage of the DCDC1 converter is set in a range from 0.6 V to VINDCDC1 V.
DEFDCDC2	32	I	Input for signal indicating default VDCDC2 voltage, 0 = 1.8 V, 1 = 3.3 V. DEFDCDC2 can also be connected to a resistor divider between VDCDC2 and GND, if the output voltage of the DCDC2 converter is set in a range from 0.6 V to VINDCDC2 V.
DEFDCDC3	1	I	Input for signal indicating default VDCDC3 voltage, 0 = 1.8 V, 1 = 3.3 V. DEFDCDC3 can also be connected to a resistor divider between VDCDC3 and GND, if the output voltage of the DCDC3 converter is set in a range from 0.6 V to VINDCDC3 V.
L1	7	—	Switch pin of VDCDC1 converter. The VDCDC1 inductor is connected here.
L2	35	—	Switch pin of VDCDC2 converter. The VDCDC2 inductor is connected here
L3	4	—	Switch pin of VDCDC3 converter. The VDCDC3 inductor is connected here
PGND1	8	—	Power ground for VDCDC1 converter
PGND2	34	—	Power ground for VDCDC2 converter
PGND3	3	—	Power ground for VDCDC3 converter
VCC	37	I	Power supply for digital and analog circuitry of VDCDC1, VDCDC2, and VDCDC3 DC-DC converters. VCC must be connected to the same voltage supply as VINDCDC3, VINDCDC1, and VINDCDC2. VCC also supplies serial interface block.
VDCDC1	9	I	VDCDC1 feedback voltage sense input. Connect directly to VDCDC1
VDCDC2	33	I	VDCDC2 feedback voltage sense input. Connect directly to VDCDC2
VDCDC3	2	I	VDCDC3 feedback voltage sense input. Connect directly to VDCDC3
VINDCDC1	6	I	Input for VDCDC1 step-down converter. VINDCDC1 must be connected to the same voltage supply as VINDCDC2, VINDCDC3, and VCC
VINDCDC2	36	I	Input for VDCDC2 step-down converter. VINDCDC2 must be connected to the same voltage supply as VINDCDC1, VINDCDC3, and VCC
VINDCDC3	5	I	Input for VDCDC3 step-down converter. VINDCDC3 must be connected to the same voltage supply as VINDCDC1, VINDCDC2, and VCC
Thermal pad	—	—	Connect the thermal pad to analog ground
LDO REGULATOR			
DEFLD01	12	I	Digital input. DEFLD01 sets the default output voltage of LDO1 and LDO2
DEFLD02	13	I	Digital input. DEFLD02 sets the default output voltage of LDO1 and LDO2
LDO_EN	22	I	Enable input for LDO1 and LDO2. A logic high enables the LDOs, a logic low disables the LDOs
VBACKUP	15	I	Connect the backup battery to this input pin
VINLDO	19	I	Input for LDO1 and LDO2
VLDO1	20	O	Output of LDO1
VLDO2	18	O	Output of LDO2
VRTC	16	O	Output of the LDO/switch for the real time clock
VSYSIN	14	I	Input of system voltage for VRTC switch
CONTROL AND I^2C			
$\overline{\text{HOT_RESET}}$	11	I	Push-button input that reboots or wakes up the processor through $\overline{\text{RESPWRON}}$ output pin
$\overline{\text{INT}}$	28	O	Open drain output
$\overline{\text{LOW_BAT}}$	21	O	Open-drain output of LOW_BAT comparator
LOWBAT_SNS	39	I	Input for the comparator driving the $\overline{\text{LOW_BAT}}$ output
$\overline{\text{PWRFAIL}}$	31	O	Open-drain output. Active low when $\overline{\text{PWRFAIL}}$ comparator indicates low VBAT condition

Copyright © 2009–2018, Texas Instruments Incorporated

Pin Functions (continued)

PIN		I/O	DESCRIPTION
NAME	NO.		
PWRFAIL_SNS	38	I	Input for the comparator driving the $\overline{\text{PWRFAIL}}$ output
$\overline{\text{RESPWRON}}$	27	O	Open-drain system reset output
SCLK	30	I	Serial interface clock line
SDAT	29	I/O	Serial interface data/address
TRESPWRON	26	I	Connect the timing capacitor to TRESPWRON to set the reset delay time: 1 nF → 100 ms.

7 Specifications

7.1 Absolute Maximum Ratings

over operating free-air temperature range (unless otherwise noted)[1]

		MIN	MAX	UNIT
Input voltage[2]	All pins except AGND and PGND	–0.3	7	V
Current	L1, L2, L3, PGND1, PGND2, PGND3, VINDCDC1, VINDCDC2, VINDCDC3		2000	mA
Peak current	All pins except L1, L2, L3, PGND1, PGND2, PGND3, VINDCDC1, VINDCDC2, VINDCDC3		1000	mA
Operating free-air temperature		–40	125	°C
Maximum junction temperature, $T_{J(MAX)}$			150	°C
Storage temperature, T_{stg}		–65	150	°C

(1) Stresses beyond those listed under *Absolute Maximum Ratings* may cause permanent damage to the device. These are stress ratings only, which do not imply functional operation of the device at these or any other conditions beyond those indicated under *Recommended Operating Conditions*. Exposure to absolute-maximum-rated conditions for extended periods may affect device reliability.
(2) Voltages are in respect to AGND.

7.2 ESD Ratings

			VALUE	UNIT
TPS65023-Q1 IN RHA PACKAGE				
$V_{(ESD)}$	Electrostatic discharge	Human-body model (HBM), per AEC Q100-002[1]	±2000	V
		Charged-device model (CDM), per AEC Q100-011	±750	
		Machine model (MM)	±50	
TPS65023-Q1 IN RSB PACKAGE				
$V_{(ESD)}$	Electrostatic discharge	Human-body model (HBM), per AEC Q100-002[1]	±2000	V
		Charged-device model (CDM), per AEC Q100-011	±1000	
		Machine model (MM)	±100	

(1) AEC Q100-002 indicates that HBM stressing shall be in accordance with the ANSI/ESDA/JEDEC JS-001 specification.

7.3 Recommended Operating Conditions

over operating free-air temperature range (unless otherwise noted)

			MIN	NOM	MAX	UNIT
V_{CC}	Input voltage range step-down converters	VCC, VINDCDC1, VINDCDC2, VINDCDC3	2.5		6	V
V_O	Output voltage range for VDCDC1 step-down converter(1)		0.6		V_{CC}	V
	Output voltage range for VDCDC2 step-down converter(1)		0.6		V_{CC}	
	Output voltage range for VDCDC3 step-down converter(1)		0.6		V_{CC}	
V_{INLDO}	Input voltage range for LDOs	VINLDO1, VINLDO2	1.5		6.5	V
V_O	Output voltage range for LDOs	VLDO1, VLDO2	1		V_{CC}	V
$I_{O(DCDC1)}$	Output current L1				1500	mA
	Inductor at L1(2)		1.5	2.2		µH
$C_{I(DCDC1)}$	Input capacitor at VINDCDC1(2)		10			µF
$C_{O(DCDC1)}$	Output capacitor at VDCDC1(2)		10	22		µF
$I_{O(DCDC2)}$	Output current at L2				1200	mA
	Inductor at L2(2)		1.5	2.2		µH
$C_{I(DCDC2)}$	Input capacitor at VINDCDC2(2)		10			µF
$C_{O(DCDC2)}$	Output capacitor at VDCDC2(2)		10	22		µF
$I_{O(DCDC3)}$	Output current at L3				1000	mA
	Inductor at L3(2)		1.5	2.2		µH
$C_{I(DCDC3)}$	Input capacitor at VINDCDC3(2)		10			µF
$C_{O(DCDC3)}$	Output capacitor at VDCDC3(2)		10	22		µF
$C_{I(VCC)}$	Input capacitor at VCC(2)		1			µF
$C_{I(VINLDO)}$	Input capacitor at VINLDO(2)		1			µF
$C_{O(VLDO1-2)}$	Output capacitor at VLDO1, VLDO2(2)		2.2			µF
$I_{O(VLDO1-2)}$	Output current at VLDO1, VLDO2				200	mA
$C_{O(VRTC)}$	Output capacitor at VRTC(2)		4.7			µF
T_A	Operating ambient temperature		–40		125	°C
T_J	Operating junction temperature		–40		125	°C
	Resistor from VINDCDC3, VINDCDC2, and VINDCDC1 to VCC used for filtering(3)			1	10	Ω

(1) When using an external resistor divider at DEFDCDC3, DEFDCDC2, DEFDCDC1
(2) See *Detailed Design Procedure* for more information.
(3) Up to 3 mA can flow into VCC when all three converters are running in PWM. This resistor causes the UVLO threshold to be shifted accordingly.

7.4 Thermal Information

THERMAL METRIC(1)		TPS65023-Q1		UNIT
		RHA (VQFN)	RSB (WQFN)	
		40 PINS	40 PINS	
$R_{\theta JA}$	Junction-to-ambient thermal resistance	31.6	34.6	°C/W
$R_{\theta JC(top)}$	Junction-to-case (top) thermal resistance	18.2	14.7	°C/W
$R_{\theta JB}$	Junction-to-board thermal resistance	6.6	6.6	°C/W
ψ_{JT}	Junction-to-top characterization parameter	0.2	0.2	°C/W
ψ_{JB}	Junction-to-board characterization parameter	6.5	6.5	°C/W
$R_{\theta JC(bot)}$	Junction-to-case (bottom) thermal resistance	1.7	1.3	°C/W

(1) For more information about traditional and new thermal metrics, see the *Semiconductor and IC Package Thermal Metrics* application report.

Copyright © 2009–2018, Texas Instruments Incorporated

7.5 Electrical Characteristics

VINDCDC1 = VINDCDC2 = VINDCDC3 = V_{CC} = V_{INLDO} = 3.6 V, V_{BACKUP} = 3 V, T_A = –40°C to 125°C, typical values are at T_A = 25°C (unless otherwise noted)

PARAMETER		TEST CONDITIONS		MIN	TYP	MAX	UNIT
CONTROL SIGNALS: SCLK, SDAT (INPUT), DCDC1_EN, DCDC2_EN, DCDC3_EN, LDO_EN, DEFLDO1, DEFLDO2							
V_{IH}	High-level input voltage	Resistor pullup at SCLK and SDAT = 4.7 kΩ, pulled to VRTC		1.3		V_{CC}	V
V_{IH}	High-level input voltage, SDAT	Resistor pullup at SCLK and SDAT = 4.7 kΩ, pulled to VRTC		1.45		V_{CC}	V
V_{IL}	Low-level input voltage	Resistor pullup at SCLK and SDAT = 4.7 kΩ, pulled to VRTC		0		0.4	V
I_H	Input bias current				0.01	0.1	µA
CONTROL SIGNALS: $\overline{\text{HOT_RESET}}$							
V_{IH}	High-level input voltage			1.3		V_{CC}	V
V_{IL}	Low-level input voltage			0		0.4	V
I_{IB}	Input bias current				0.01	0.1	µA
t_{glitch}	Deglitch time at $\overline{\text{HOT_RESET}}$			25	30	35	ms
CONTROL SIGNALS: $\overline{\text{LOWBAT}}$, $\overline{\text{PWRFAIL}}$, $\overline{\text{RESPWRON}}$, $\overline{\text{INT}}$, SDAT (OUTPUT)							
V_{OH}	High-level output voltage					6	V
V_{OL}	Low-level output voltage	I_{IL} = 5 mA		0		0.3	V
	Duration of low pulse at $\overline{\text{RESPWRON}}$	External capacitor 1 nF			100		ms
	Reset power-on threshold	VRTC falling		–3%	2.4	3%	V
		VRTC rising		–3%	2.52	3%	
SUPPLY PINS: VCC, VINDCDC1, VINDCDC2, VINDCDC3							
$I_{(q)}$	Operating quiescent current, PFM	All three DC-DC converters enabled, zero load, no switching, and LDOs enabled	V_{CC} = 3.6 V, V_{BACKUP} = 3 V, V_{SYSIN} = 0 V		85	100	µA
		All three DC-DC converters enabled, zero load, no switching, and LDOs off	V_{CC} = 3.6 V, V_{BACKUP} = 3 V, V_{SYSIN} = 0 V		78	90	
		DCDC1 and DCDC2 converters enabled, zero load, no switching, and LDOs off	V_{CC} = 3.6 V, V_{BACKUP} = 3 V, V_{SYSIN} = 0 V		57	70	
		DCDC1 converter enabled, zero load, no switching, and LDOs off	V_{CC} = 3.6 V, V_{BACKUP} = 3 V, V_{SYSIN} = 0 V		43	55	
I_I	Current into VCC, PWM	All three DC-DC converters enabled and running in PWM, LDOs off	V_{CC} = 3.6 V, V_{BACKUP} = 3 V, V_{SYSIN} = 0 V		2	3	mA
		DCDC1 and DCDC2 converters enabled and running in PWM, LDOs off	V_{CC} = 3.6 V, V_{BACKUP} = 3 V, V_{SYSIN} = 0 V		1.5	2.5	
		DCDC1 converter enabled and running in PWM, LDOs off	V_{CC} = 3.6 V, V_{BACKUP} = 3 V, V_{SYSIN} = 0 V		0.85	2	
$I_{(q)}$	Quiescent current	All converters disabled, LDOs off	V_{CC} = 3.6 V, V_{BACKUP} = 3 V, V_{SYSIN} = 0 V		23	33	µA
			V_{CC} = 2.6 V, V_{BACKUP} = 3 V, V_{SYSIN} = 0 V		3.5	5	
			V_{CC} = 3.6 V, V_{BACKUP} = 0 V, V_{SYSIN} = 0 V			43	
SUPPLY PINS: VBACKUP, VSYSIN, VRTC							
$I_{(q)}$	Operating quiescent current	V_{BACKUP} = 3 V, V_{SYSIN} = 0 V, V_{CC} = 2.6 V, current into VBACKUP			20	33	µA
$I_{(SD)}$	Operating quiescent current	V_{BACKUP} < V_VBACKUP, current into VBACKUP			2	3	µA
	VRTC LDO output voltage	V_{SYSIN} = V_{BACKUP} = 0 V, I_O = 0 mA			3		V
I_O	Output current for VRTC	V_{SYSIN} < 2.57 V and V_{BACKUP} < 2.57 V				30	mA
	VRTC short-circuit current limit	V_{RTC} = GND, V_{SYSIN} = V_{BACKUP} = 0 V				100	mA
	Maximum output current at VRTC for $\overline{\text{RESPWRON}}$ = 1	V_{RTC} > 2.6 V, V_{CC} = 3 V, V_{SYSIN} = V_{BACKUP} = 0 V		30			mA
V_O	Output voltage accuracy for VRTC	V_{SYSIN} = V_{BACKUP} = 0 V, I_O = 0 mA		–1%		1%	

Copyright © 2009–2018, Texas Instruments Incorporated

Electrical Characteristics (continued)

VINDCDC1 = VINDCDC2 = VINDCDC3 = V_{CC} = V_{INLDO} = 3.6 V, V_{BACKUP} = 3 V, T_A = –40°C to 125°C, typical values are at T_A = 25°C (unless otherwise noted)

PARAMETER			TEST CONDITIONS	MIN	TYP	MAX	UNIT
	Line regulation for VRTC		V_{CC} = V_{RTC} + 0.5 V to 6.5 V, I_O = 5 mA	–1%		1%	
	Load regulation VRTC		I_O = 1 mA to 30 mA, V_{SYSIN} = V_{BACKUP} = 0 V	–3%		1%	
	Regulation time for VRTC		Load change from 10% to 90%		10		µs
I_{lkg}	Input leakage current at VSYSIN		V_{SYSIN} < V_VSYSIN			2	µA
	$r_{DS(on)}$ of VSYSIN switch					12.5	Ω
	$r_{DS(on)}$ of VBACKUP switch					12.5	Ω
	Input voltage range at VBACKUP(1)			2.73		3.75	V
	Input voltage range at VSYSIN(1)			2.73		3.75	V
	VSYSIN threshold		VSYSIN falling	–3%	2.55	3%	V
	VSYSIN threshold		VSYSIN rising	–3%	2.65	3%	V
	VBACKUP threshold		VBACKUP falling	–3%	2.55	3%	V
	VBACKUP threshold		VBACKUP falling	–3%	2.65	3%	V
SUPPLY PIN: VINLDO							
$I_{(q)}$	Operating quiescent current		Current per LDO into VINLDO		16	30	µA
$I_{(SD)}$	Shutdown current		Total current for both LDOs into VINLDO, V_{INLDO} = 0 V		0.1	1	µA
VDCDC1 STEP-DOWN CONVERTER							
I_O	Maximum output current			1500			mA
$I_{(SD)}$	Shutdown supply current in VINDCDC1		DCDC1_EN = GND		0.1	1	µA
$r_{DS(on)}$	P-channel MOSFET on-resistance		V_{CC} = $V_{(GS)}$ = 3.6 V		125	261	mΩ
I_{lkg}	P-channel leakage current		V_{CC} = 6 V			2	µA
$r_{DS(on)}$	N-channel MOSFET on-resistance		V_{CC} = $V_{(GS)}$ = 3.6 V		130	260	mΩ
I_{lkg}	N-channel leakage current		$V_{(DS)}$ = 6 V		7	10	µA
	Forward current limit (P-channel and N-channel)		2.5 V < $V_{I(MAIN)}$ < 6 V	1.9	2.19	2.6	A
f_S	Oscillator frequency			1.95	2.25	2.55	MHz
	Fixed output voltage FPWMDCDC1 = 0	All VDCDC1	V_{CC} = 2.5 V to 6 V, 0 mA ≤ I_O ≤ 1.5 A	–2%		2%	
	Fixed output voltage FPWMDCDC1 = 1	All VDCDC1	V_{CC} = 2.5 V to 6 V, 0 mA ≤ I_O ≤ 1.5 A	–1%		1%	
	Adjustable output voltage with resistor divider at DEFDCDC1, FPWMDCDC1 = 0		V_{CC} = VDCDC1 + 0.3 V (minimum 2.5 V) to 6 V, 0 mA ≤ I_O ≤ 1.2 A	–2%		2%	
	Adjustable output voltage with resistor divider at DEFDCDC1, FPWMDCDC1 = 1		V_{CC} = VDCDC1 + 0.3 V (minimum 2.5 V) to 6 V, 0 mA ≤ I_O ≤ 1.2 A	–1%		1%	
	Line regulation		V_{CC} = VDCDC1 + 0.3 V (minimum. 2.5 V) to 6 V, I_O = 10 mA		0		%/V
	Load regulation		I_O = 10 mA to 1200 mA		0.25		%/A
	Soft-start ramp time		VDCDC1 ramping from 5% to 95% of target value		750		µs
	Internal resistance from L1 to GND				1		MΩ
	VDCDC1 discharge resistance		DCDC1 discharge = 1		300		Ω
VDCDC2 STEP-DOWN CONVERTER							
I_O	Maximum output current		DEFDCDC2 = GND	1200			mA
			V_{CC} = 3.6 V, 3.3 V – 1% ≤ VDCDC2 ≤ 3.3 V + 1%	1000			
$I_{(SD)}$	Shutdown supply current in VINDCDC2		DCDC2_EN = GND		0.1	1	µA
$r_{DS(on)}$	P-channel MOSFET on-resistance		V_{CC} = $V_{(GS)}$ = 3.6 V		140	300	mΩ
I_{lkg}	P-channel leakage current		V_{CC} = 6 V			2	µA
$r_{DS(on)}$	N-channel MOSFET on-resistance		V_{CC} = $V_{(GS)}$ = 3.6 V		150	297	mΩ
I_{lkg}	N-channel leakage current		$V_{(DS)}$ = 6 V		7	10	µA
I_{LIMF}	Forward current limit (P-channel and N-channel)		2.5 V < V_{CC} < 6 V	1.7	1.94	2.2	A
f_S	Oscillator frequency			1.95	2.25	2.55	MHz
	Fixed output voltage FPWMDCDC2=0	VDCDC2 = 1.8 V	V_{CC} = 2.5 V to 6 V, 0 mA ≤ I_O ≤ 1.2 A	–2%		2%	
		VDCDC2 = 3.3 V	V_{CC} = 3.7 V to 6 V, 0 mA ≤ I_O ≤ 1.2 A	–1%		1%	

(1) Based on the requirements for the Intel PXA270 processor.

Copyright © 2009–2018, Texas Instruments Incorporated

Electrical Characteristics (continued)

VINDCDC1 = VINDCDC2 = VINDCDC3 = V_{CC} = V_{INLDO} = 3.6 V, V_{BACKUP} = 3 V, T_A = –40°C to 125°C, typical values are at T_A = 25°C (unless otherwise noted)

PARAMETER			TEST CONDITIONS	MIN	TYP	MAX	UNIT
	Fixed output voltage FPWMDCDC2=1	VDCDC2 = 1.8 V	V_{CC} = 2.5 V to 6 V, 0 mA ≤ I_O ≤ 1.2 A	–2%		2%	
		VDCDC2 = 3.3 V	V_{CC} = 3.7 V to 6 V, 0 mA ≤ I_O ≤ 1.2 A	–1%		1%	
	Adjustable output voltage with resistor divider at DEFDCDC2 FPWMDCDC2 = 0		V_{CC} = VDCDC2 + 0.3 V (minimum 2.5 V) to 6 V, 0 mA ≤ I_O ≤ 1 A	–2%		2%	
	Adjustable output voltage with resistor divider at DEFDCDC2, FPWMDCDC2 = 1		V_{CC} = VDCDC2 + 0.3 V (minimum 2.5 V) to 6 V, 0 mA ≤ I_O ≤ 1 A	–1%		1%	
	Line regulation		V_{CC} = VDCDC2 + 0.3 V (minimum. 2.5 V) to 6 V, I_O = 10 mA		0		%/V
	Load regulation		I_O = 10 mA to 1000 mA		0.25		%/A
	Soft-start ramp time		VDCDC2 ramping from 5% to 95% of target value		750		µs
	Internal resistance from L2 to GND				1		MΩ
	VDCDC2 discharge resistance		DCDC2 discharge = 1		300		Ω
VDCDC3 STEP-DOWN CONVERTER							
I_O	Maximum output current		DEFDCDC3 = GND	1000			mA
			V_{CC} = 3.6 V, 3.3 V – 1% ≤ VDCDC3 ≤ 3.3 V + 1%	525			
$I_{(SD)}$	Shutdown supply current in VINDCDC3		DCDC3_EN = GND		0.1	1	µA
$r_{DS(on)}$	P-channel MOSFET on-resistance		V_{CC} = $V_{(GS)}$ = 3.6 V		310	698	mΩ
I_{lkg}	P-channel leakage current		V_{CC} = 6 V		0.1	2	µA
$r_{DS(on)}$	N-channel MOSFET on-resistance		V_{CC} = $V_{(GS)}$ = 3.6 V		220	503	mΩ
I_{lkg}	N-channel leakage current		$V_{(DS)}$ = 6 V		7	10	µA
	Forward current limit (P-channel and N-channel)		2.5 V < V_{CC} < 6 V	1.28	1.49	1.69	A
f_S	Oscillator frequency			1.95	2.25	2.55	MHz
	Fixed output voltage FPWMDCDC3=0	VDCDC3 = 1.8 V	V_{CC} = 2.5 V to 6 V, 0 mA ≤ I_O ≤ 1 A	–2%		2%	
		VDCDC3 = 3.3 V	V_{CC} = 3.6 V to 6 V, 0 mA ≤ I_O ≤ 1 A	–1%		1%	
	Fixed output voltage FPWMDCDC3=1	VDCDC3 = 1.8 V	V_{CC} = 2.5 V to 6 V, 0 mA ≤ I_O ≤ 1 A	–2%		2%	
		VDCDC3 = 3.3 V	V_{CC} = 3.6 V to 6 V, 0 mA ≤ I_O ≤ 1 A	–1%		1%	
	Adjustable output voltage with resistor divider at DEFDCDC3 FPWMDCDC3 = 0		V_{CC} = VDCDC3 + 0.5 V (minimum 2.5 V) to 6 V, 0 mA ≤ I_O ≤ 800 mA	–2%		2%	
	Adjustable output voltage with resistor divider at DEFDCDC3, FPWMDCDC3 = 1		V_{CC} = VDCDC3 + 0.5 V (minimum 2.5 V) to 6 V, 0 mA ≤ I_O ≤ 800 mA	–1%		1%	
	Line regulation		V_{CC} = VDCDC3 + 0.3 V (minimum. 2.5 V) to 6 V, I_O = 10 mA		0		%/V
	Load regulation		I_O = 10 mA to 1000 mA		0.25		%/A
	Soft-start ramp time		VDCDC3 ramping from 5% to 95% of target value		750		µs
	Internal resistance from L3 to GND				1		MΩ
	VDCDC3 discharge resistance		DCDC3 discharge = 1		300		Ω
VLDO1 AND VLDO2 LOW DROPOUT REGULATORS							
V_I	Input voltage range for LDO1, 2			1.5		6.5	V
$V_{O(LD01)}$	LDO1 output voltage range			1		3.15	V
$V_{O(LDO2)}$	LDO2 output voltage range			1		3.3	V
I_O	Maximum output current for LDO1, LDO2		V_{CC} = 1.8 V, V_O = 1.3 V	200			mA
			V_{CC} = 1.5 V, V_O = 1.3 V		120		
$I_{(SC)}$	LDO1 and LDO2 short circuit current limit		$V_{(LDO1)}$ = GND, $V_{(LDO2)}$ = GND			400	mA
	Minimum voltage drop at LDO1, LDO2		I_O = 50 mA, V_{INLDO} = 1.8 V			120	mV
			I_O = 50 mA, V_{INLDO} = 1.5 V		65	150	
			I_O = 200 mA, V_{INLDO} = 1.8 V			300	
	Output voltage accuracy for LDO1, LDO2		I_O = 10 mA	–2%		1%	
	Line regulation for LDO1, LDO2		V_{INLDO} = VLDO1,2 + 0.5 V (minimum 2.5 V) to 6.5 V, I_O = 10 mA	–1%		1%	
	Load regulation for LDO1, LDO2		I_O = 0 mA to 50 mA	–1%		1%	
	Regulation time for LDO1, LDO2		Load change from 10% to 90%		10		µs

Copyright © 2009–2018, Texas Instruments Incorporated

Electrical Characteristics (continued)

VINDCDC1 = VINDCDC2 = VINDCDC3 = V_{CC} = V_{INLDO} = 3.6 V, V_{BACKUP} = 3 V, T_A = –40°C to 125°C, typical values are at T_A = 25°C (unless otherwise noted)

PARAMETER		TEST CONDITIONS	MIN	TYP	MAX	UNIT
ANALOG SIGNALS DEFDCDC1, DEFDCDC2, DEFDCDC3						
V_{IH}	High-level input voltage (2)		1.3		V_{CC}	V
V_{IL}	Low-level input voltage		0		0.1	V
	Input bias current			0.001	0.05	µA
THERMAL SHUTDOWN						
$T_{(SD)}$	Thermal shutdown	Increasing junction temperature		160		°C
	Thermal shutdown hysteresis	Decreasing junction temperature		20		°C
INTERNAL UNDERVOLTAGE LOCK OUT						
UVLO	Internal UVLO	VCC falling	–2%	2.35	2%	V
V_{UVLO_HYST}	Internal UVLO comparator hysteresis			120		mV
VOLTAGE DETECTOR COMPARATORS						
	Comparator threshold (PWRFAIL_SNS, LOWBAT_SNS)	Falling threshold	–2%	1	2%	V
	Hysteresis		40	50	60	mV
	Propagation delay	25-mV overdrive			10	µs
POWER GOOD						
V_{PGOODF}		VDCDC1, VDCDC2, VDCDC3, VLDO1, VLDO2, decreasing	–12%	–10%	–8%	
V_{PGOODR}		VDCDC1, VDCDC2, VDCDC3, VLDO1, VLDO2, increasing	–7%	–5%	–3%	

(2) The input voltage can go as high as 6 V. If the input voltage exceeds V_{CC}, an input current of ($V_{(PB_IN)}$ - 0.7 V - V_{CC}) / 10 kΩ flows.

7.6 Timing Requirements

		MIN	MAX	UNIT
f_{MAX}	Clock frequency		400	kHz
$t_{wH(HIGH)}$	Clock high time	600		ns
$t_{wL(LOW)}$	Clock low time	1300		ns
t_r	DATA and CLK rise time		300	ns
t_f	DATA and CLK fall time		300	ns
$t_{h(STA)}$	Hold time (repeated) START condition (after this period the first clock pulse is generated)	600		ns
$t_{h(DATA)}$	Setup time for repeated START condition	600		ns
$t_{h(DATA)}$	Data input hold time	300		ns
$t_{su(DATA)}$	Data input setup time	300		ns
$t_{su(STO)}$	STOP condition setup time	600		ns
$t_{(BUF)}$	Bus free time	1300		ns

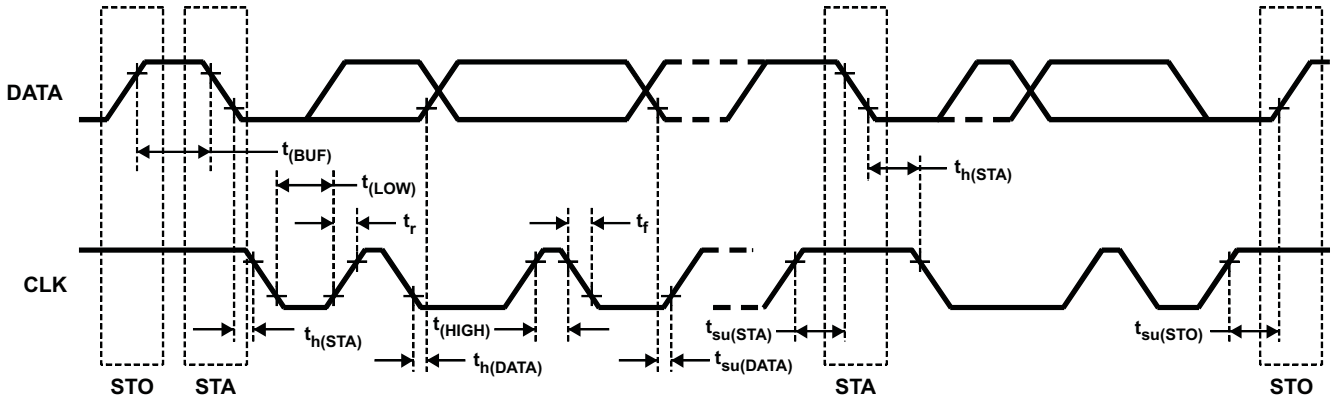

Figure 1. Serial Interface Timing Diagram

Copyright © 2009–2018, Texas Instruments Incorporated

7.7 Typical Characteristics

Table 1. EVM Parameters for Typical Characteristics Measurement(1)

CONVERTER	INDUCTOR	OUTPUT CAPACITOR	OUTPUT CAPACITOR VALUE
VDCDC1	VLCF4020-2R2	C2012X5R0J106M	2 × 10 µF
VDCDC2	VLCF4020-2R2	C2012X5R0J106M	2 × 10 µF
VDCDC3	VLF4012AT-2R2M1R5	C2012X5R0J106M	2 × 10 µF

(1) Graphs were taken using the evaluation module (EVM), TPS65023EVM-205, with the inductor and output capacitor combinations in Table 1. See *TPS65023EVM, User's Guide* for more information.

Table 2. Table Of Graphs

		FIGURE
Efficiency	vs Output current	Figure 2, Figure 3, Figure 4, Figure 5, Figure 6, Figure 7
Output voltage	vs Output current at 85°C	Figure 8, Figure 9
Line transient response		Figure 10, Figure 11, Figure 12
Load transient response		Figure 13, Figure 14, Figure 15
VDCDC2 PFM operation		Figure 16
VDCDC2 low ripple PFM operation		Figure 17
VDCDC2 PWM operation		Figure 18
Startup VDCDC1, VDCDC2 and VDCDC3		Figure 19
Startup LDO1 and LDO2		Figure 20
Line transient response		Figure 21, Figure 22, Figure 23
Load transient response		Figure 24, Figure 25, Figure 26

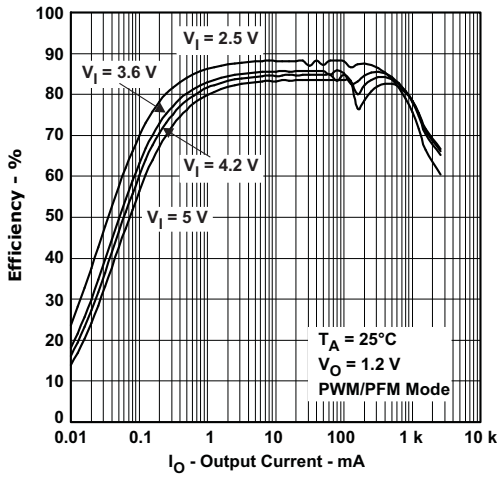

Figure 2. DCDC1: Efficiency vs Output Current

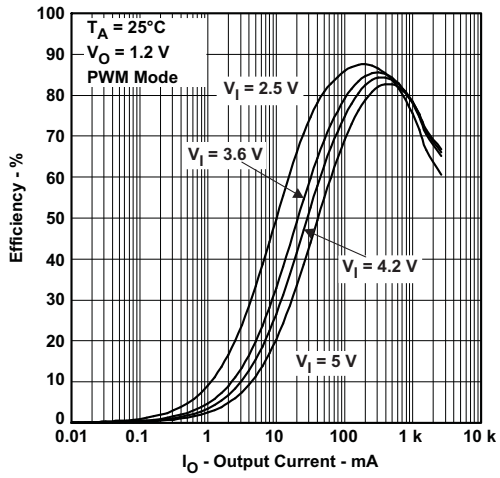

Figure 3. DCDC1: Efficiency vs Output Current

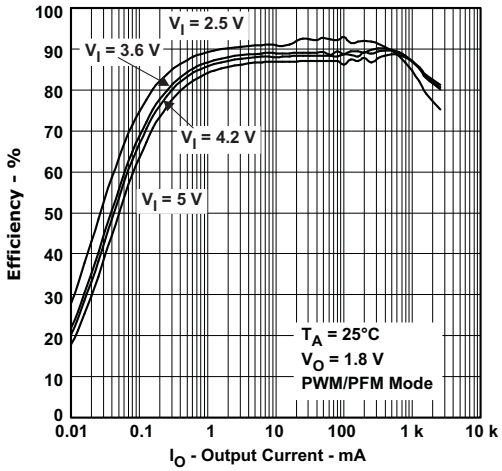

Figure 4. DCDC2: Efficiency vs Output Current

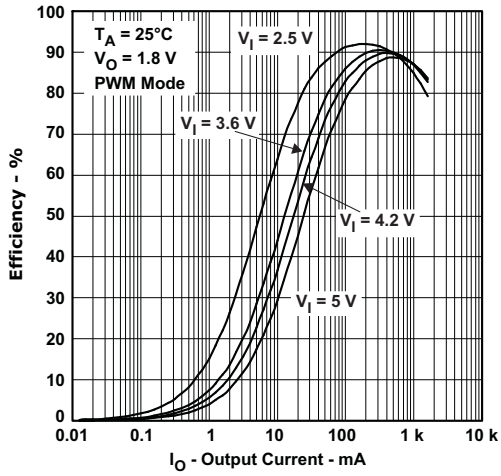

Figure 5. DCDC2: Efficiency vs Output Current

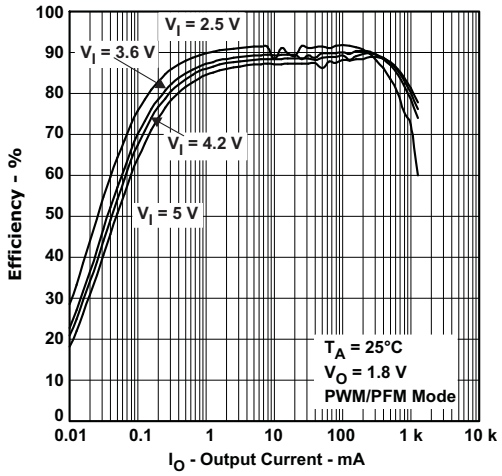

Figure 6. DCDC3: Efficiency vs Output Current

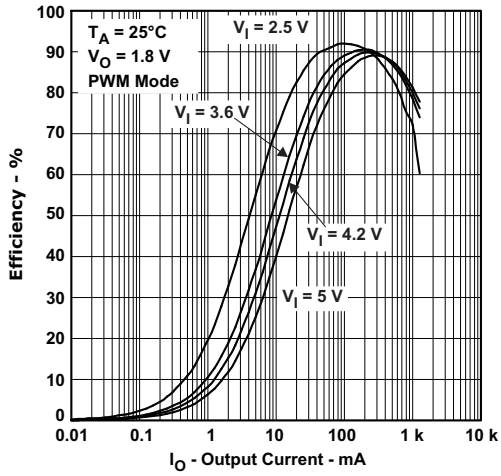

Figure 7. DCDC3: Efficiency vs Output Current

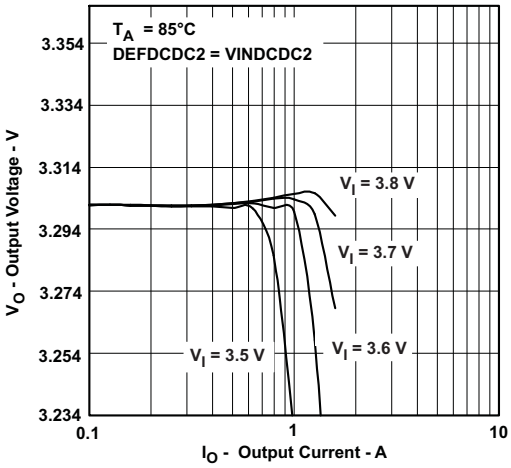

Figure 8. DCDC2: Output Voltage vs Output Current At 85°C

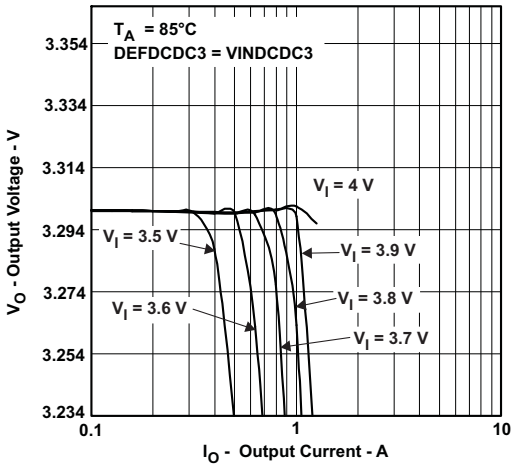

Figure 9. DCDC3: Output Voltage vs Output Current At 85°C

Copyright © 2009–2018, Texas Instruments Incorporated

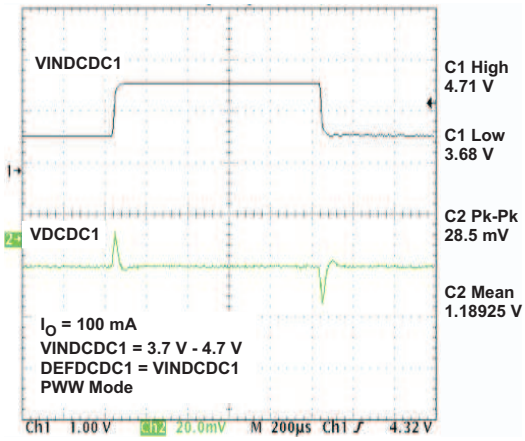

Figure 10. VDCDC1 Line Transient Response

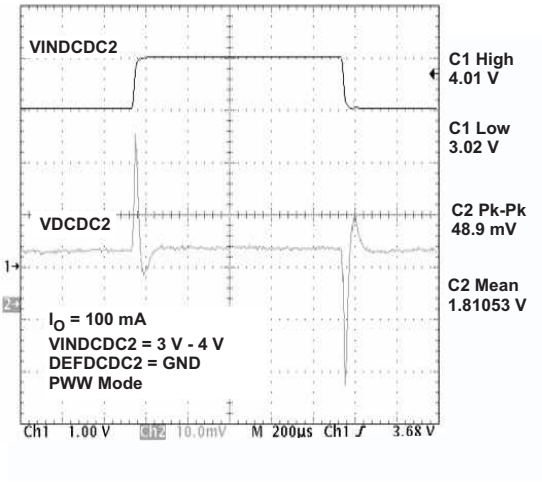

Figure 11. VDCDC2 Line Transient Response

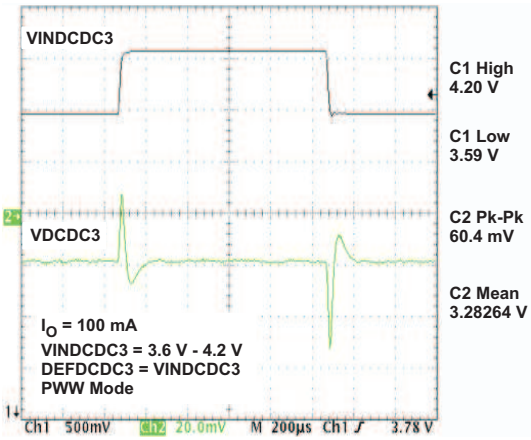

Figure 12. VDCDC3 Line Transient Response

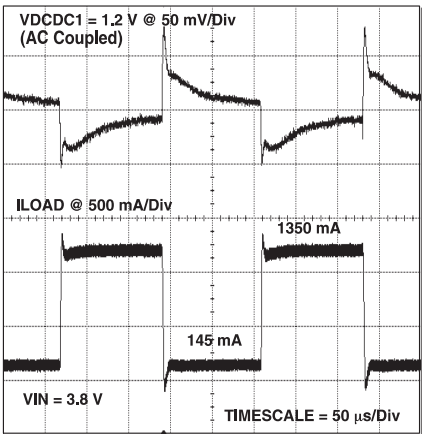

Figure 13. VDCDC1 Load Transient Response

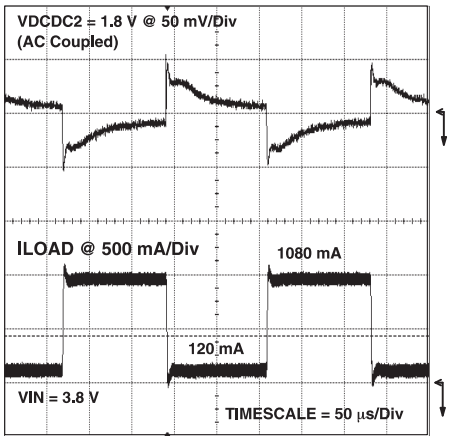

Figure 14. VDCDC2 Load Transient Response

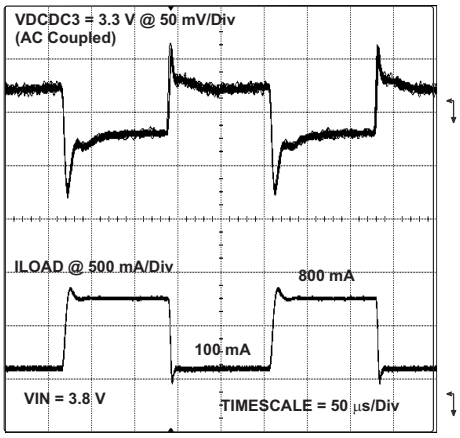

Figure 15. VDCDC3 Load Transient Response

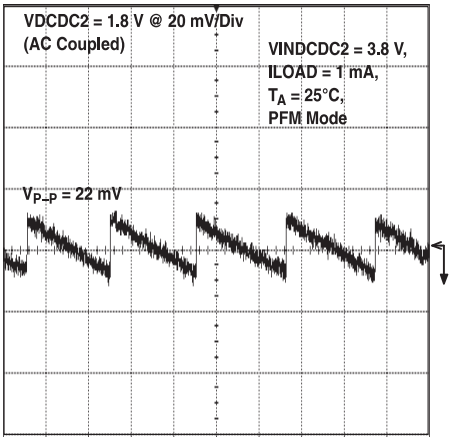

Figure 16. VDCDC2 Output Voltage Ripple

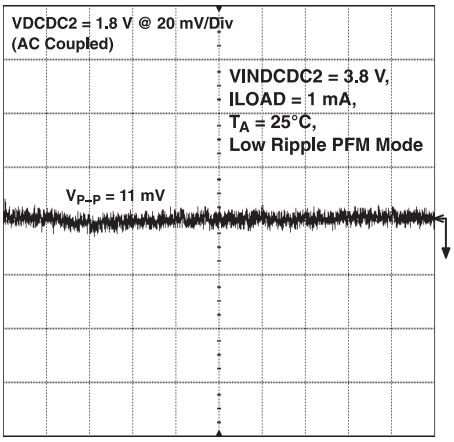

Figure 17. VDCDC2 Output Voltage Ripple

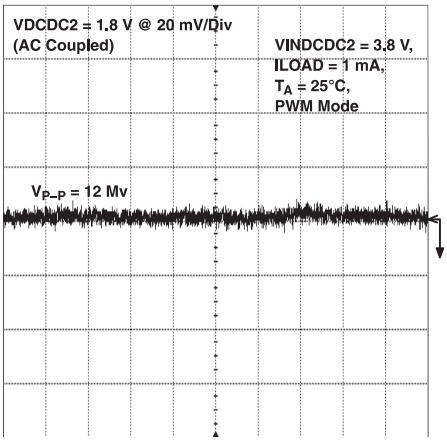

Figure 18. VDCDC2 Output Voltage Ripple

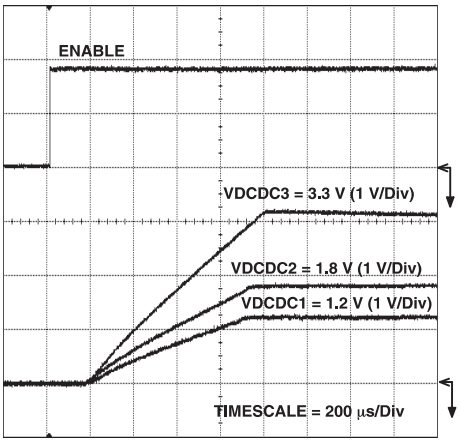

Figure 19. Startup VDCDC1, VDCDC2, and VDCDC3

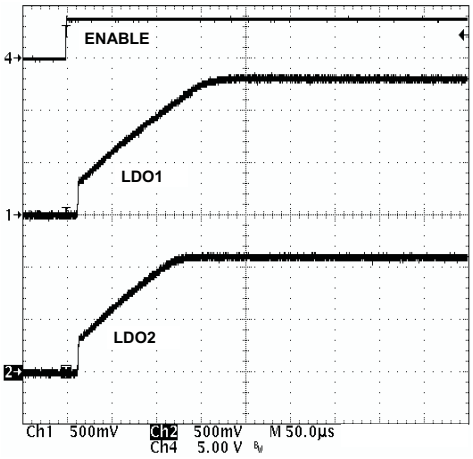

Figure 20. Startup LDO1 and LDO2

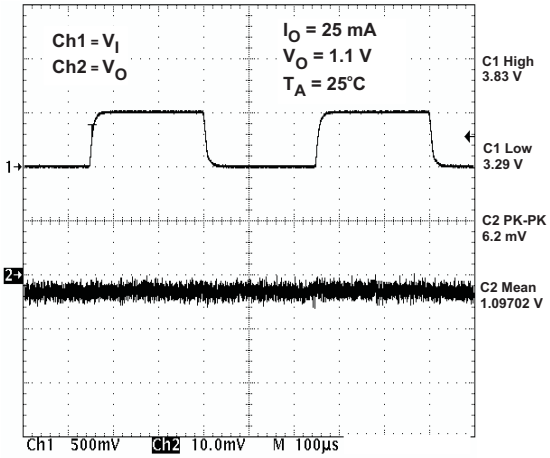

Figure 21. LDO1 Line Transient Response

Copyright © 2009–2018, Texas Instruments Incorporated

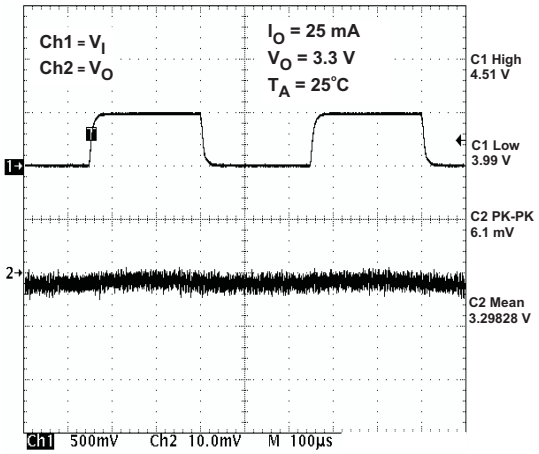

Figure 22. LDO2 Line Transient Response

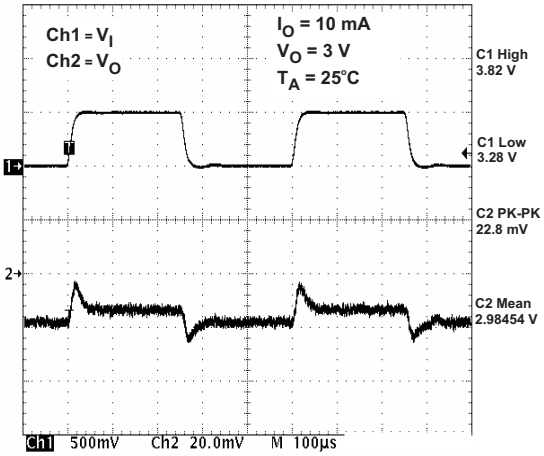

Figure 23. VRTC Line Transient Response

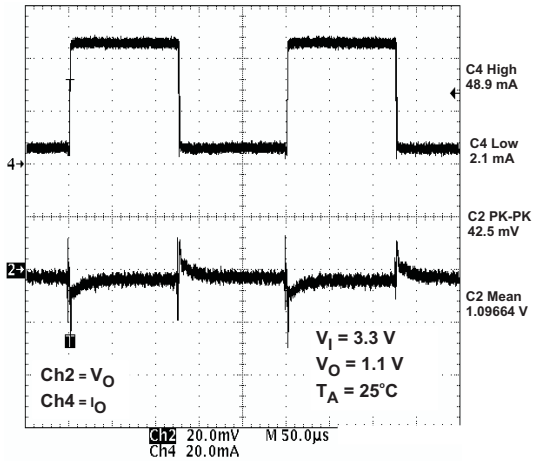

Figure 24. LDO1 Load Transient Response

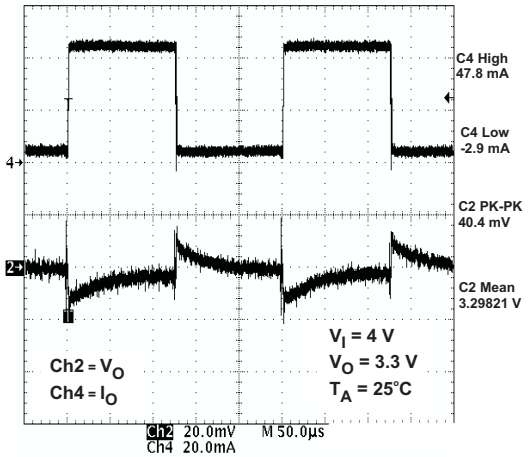

Figure 25. LDO2 Load Transient Response

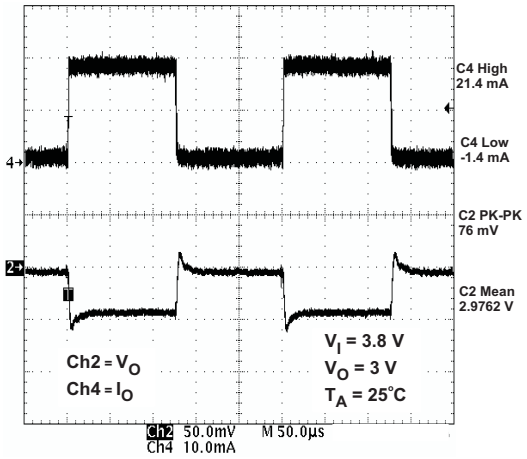

Figure 26. VRTC Load Transient Response

8 Detailed Description

8.1 Overview

The TPS65023-Q1 device has 5 regulator channels, 3 DCDCs, and 2 LDOs. DCDC3 has dynamic voltage scaling feature (DVS) that allows for power reduction to CORE supplies during idle operation or overvoltage during heavy-duty operation. With DVS and 2 more DCDCs plus 2 LDOs, the TPS65023-Q1 is ideal for CORE, Memory, IO, and peripheral power for the entire system of a wide range of suitable applications.

The device incorporates enables for the DCDCs and LDOs, I^2C for device control, push button, and a reset interface that complete the system and allow the TPS65023-Q1 to be adapted for different kinds of processors or FPGAs.

For noise-sensitive circuits, the DCDCs can be synchronized out of phase from one another, reducing the peak noise at the switching frequency. Each converter can be forced to operate in PWM mode to ensure constant switching frequency across the entire load range. However, for low load efficiency performance the DCDCs automatically enter PSM mode which reduces the switching frequency when the load current is low, saving power at idle operation.

8.2 Functional Block Diagram

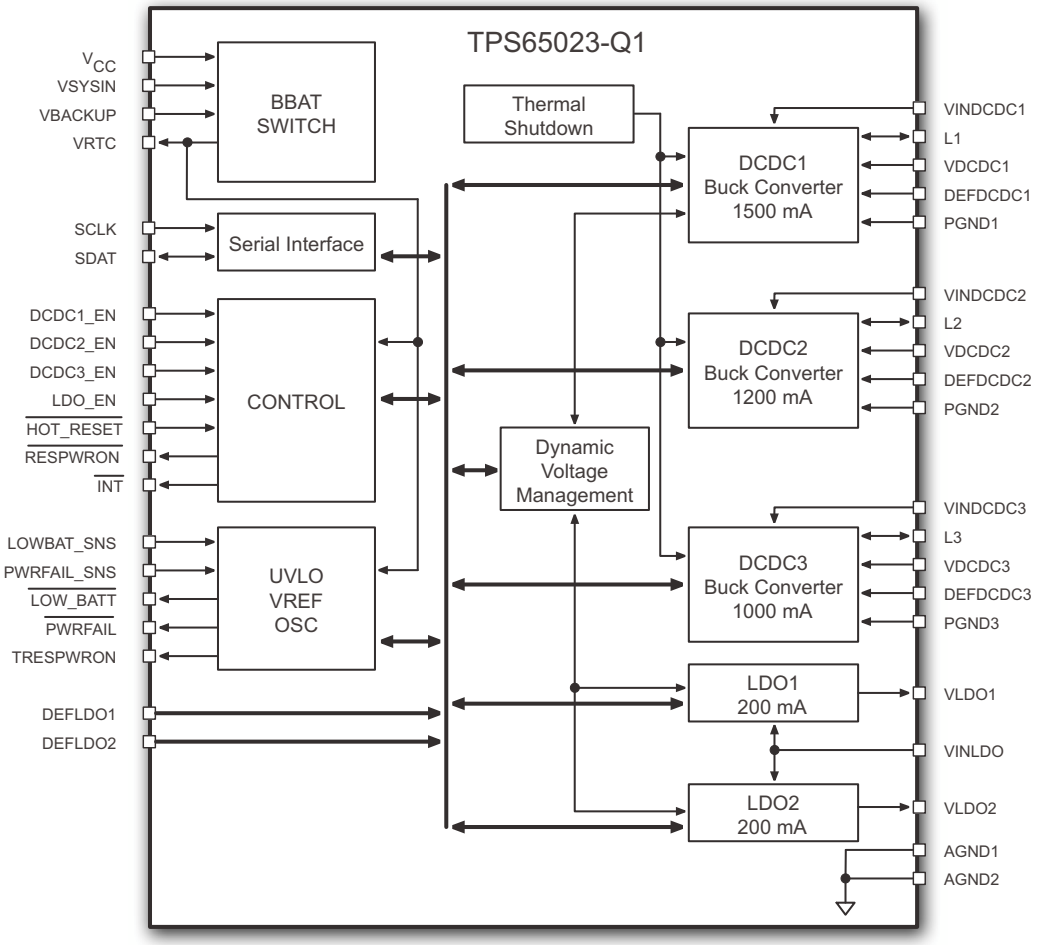

Copyright © 2009–2018, Texas Instruments Incorporated

8.3 Feature Description

8.3.1 Step-Down Converters, VDCDC1, VDCDC2, and VDCDC3

The TPS65023-Q1 incorporates three synchronous step-down converters operating typically at 2.25 MHz fixed-frequency pulse-width modulation (PWM) at moderate to heavy load currents. At light load currents, the converters automatically enter the power-save mode (PSM), and operate with pulse-frequency modulation (PFM). The VDCDC1 converter is capable of delivering 1.5-A output current, the VDCDC2 converter is capable of delivering 1.2 A, and the VDCDC3 converter is capable of delivering up to 1 A.

The converter output voltages can be programmed through the DEFDCDC1, DEFDCDC2, and DEFDCDC3 pins. The pins can either be connected to GND, VCC, or to a resistor divider between the output voltage and GND. The VDCDC1 converter defaults to 1.2 V or 1.6 V, depending on the DEFDCDC1 configuration pin. If DEFDCDC1 is tied to ground, the default is 1.2 V. If it is tied to VCC, the default is 1.6 V. When the DEFDCDC1 pin is connected to a resistor divider, the output voltage can be set in the range of 0.6 V to V_{CC}. See *Application and Implementation* for more details. The core voltage can be reprogrammed through the serial interface in the range of 0.8 V to 1.6 V with a programmable slew rate. The converter is forced into PWM operation while any programmed voltage change is underway, whether the voltage is being increased or decreased. The DEFCORE and DEFSLEW registers are used to program the output voltage and slew rate during voltage transitions.

The VDCDC2 converter defaults to 1.8 V or 3.3 V, depending on the DEFDCDC2 configuration pin. If DEFDCDC2 is tied to ground, the default is 1.8 V. If it is tied to VCC, the default is 3.3 V. When the DEFDCDC2 pin is connected to a resistor divider, the output voltage can be set in the range of 0.6 V to V_{CC}.

The VDCDC3 converter defaults to 1.8 V or 3.3 V, depending on the DEFDCDC3 configuration pin. If DEFDCDC3 is tied to ground, the default is 1.8 V. If it is tied to VCC, the default is 3.3 V. When the DEFDCDC3 pin is connected to a resistor divider, the output voltage can be set in the range of 0.6 V to V_{CC}.

The step-down converter outputs (when enabled) are monitored by power good (PG) comparators, the outputs of which are available through the serial interface. The outputs of the DC-DC converters can be optionally discharged through on-chip 300-Ω resistors when the DC-DC converters are disabled.

During PWM operation, the converters use a unique fast-response voltage-mode controller scheme with input-voltage feed-forward to achieve good line and load regulation, allowing the use of small ceramic input and output capacitors. At the beginning of each clock cycle initiated by the clock signal, the P-channel MOSFET switch is turned on. The inductor current ramps up until the comparator trips and the control logic turns off the switch. The current-limit comparator also turns off the switch if the current limit of the P-channel switch is exceeded. After the adaptive dead time used to prevent shoot-through current, the N-channel MOSFET rectifier is turned on, and the inductor current ramps down. The next cycle is initiated by the clock signal, again turning off the N-channel rectifier and turning on the P-channel switch.

The three DC-DC converters operate synchronized to each other with the VDCDC1 converter as the master. A 180° phase shift between the VDCDC1 switch turnon and the VDCDC2 and a further 90° shift to the VDCDC3 switch turnon decreases the input rms current, and smaller input capacitors can be used. This is optimized for a typical application where the VDCDC1 converter regulates a Li-Ion battery voltage of 3.7 V to 1.2 V, the VDCDC2 converter from 3.7 V to 1.8 V, and the VDCDC3 converter from 3.7 V to 3.3 V. The phase of the three converters can be changed using the CON_CTRL register.

8.3.2 Soft Start

Each of the three converters has an internal soft-start circuit that limits the inrush current during start-up. The soft start is realized by using a low initial current to charge the internal compensation capacitor. The soft-start time is typically 750 µs if the output voltage ramps from 5% to 95% of the final target value. If the output is already precharged to some voltage when the converter is enabled, then this time is reduced proportionally. There is a short delay of typically 170 µs between the converter being enabled and switching activity actually starting. This allows the converter to bias itself properly, to recognize if the output is precharged, and if so to prevent discharging of the output while the internal soft-start ramp catches up with the output voltage.

Feature Description (continued)

8.3.3 Active Discharge When Disabled

When the VDCDC1, VDCDC2, and VDCDC3 converters are disabled, due to an UVLO, DCDC_EN or OVERTEMP condition, it is possible to pull down the outputs actively. This feature is disabled per default and is individually enabled through the CON_CTRL2 register in the serial interface. When this feature is enabled, the VDCDC1, VDCDC2, and VDCDC3 outputs are discharged by a 300-Ω (typical) load which is active as long as the converters are disabled.

8.3.4 Power-Good Monitoring

All three step-down converters and both the LDO1 and LDO2 linear regulators have power-good comparators. Each comparator indicates when the relevant output voltage has dropped 10% below its target value with 5% hysteresis. The outputs of these comparators are available in the PGOODZ register through the serial interface. An interrupt is generated when any voltage rail drops below the 10% threshold. The comparators are disabled when the converters are disabled and the relevant PGOODZ register bits indicate that power is good.

8.3.5 Low-Dropout Voltage Regulators

The low-dropout voltage regulators are designed to operate well with low-value ceramic input and output capacitors. They operate with input voltages down to 1.5 V. The LDOs offer a maximum dropout voltage of 300 mV at rated output current. Each LDO supports a current-limit feature. Both LDOs are enabled by the LDO_EN pin, and both LDOs can be disabled or programmed through the serial interface using the REG_CTRL and LDO_CTRL registers. The LDOs also have reverse-conduction prevention. This allows the possibility to connect external regulators in parallel in systems with a backup battery. The TPS65023-Q1 step-down and LDO voltage regulators automatically power down when the V_{CC} voltage drops below the UVLO threshold or when the junction temperature rises above 160°C.

8.3.6 Undervoltage Lockout

The undervoltage-lockout circuit for the five regulators on the TPS65023-Q1 prevents the device from malfunctioning at low input voltages and from excessive discharge of the battery. It disables the converters and LDOs. The UVLO circuit monitors the VCC pin, the threshold is set internally to 2.35 V with 5% (120 mV) hysteresis. Note that when any of the DC-DC converters are running, there is an input current at the VCC pin, which is up to 3 mA when all three converters are running in PWM mode. This current must be considered if an external RC filter is used at the VCC pin to remove switching noise from the TPS65023-Q1 internal analog circuitry supply.

8.4 Device Functional Modes

8.4.1 VRTC Output and Operation With or Without Backup Battery

The VRTC pin is an always-on output, intended to supply up to 30 mA to a permanently required rail (that is, for a real-time clock). The TPS65023-Q1 asserts the RESPWRON signal if VRTC drops below 2.4 V. VRTC is selected from a priority scheme based on the VSYSIN and VBACKUP inputs.

When the voltage at the VSYSIN pin exceeds 2.65 V, VRTC connects to the VSYSIN input through a PMOS switch and all other paths to VRTC are disabled. The PMOS switch drops a maximum of 375 mV at 30 mA, which should be considered when using VRTC. VSYSIN can be connected to any voltage source with the appropriate input voltage, including VCC or, if set to 3.3-V output, DCDC2 or DCDC3. When VSYSIN falls below 2.65 V or shorts to ground, the PMOS switch connecting VRTC and VSYSIN opens and VRTC then connects to either VBACKUP or the output of a dedicated 3-V, 30-mA LDO. TI recommends connecting VSYSIN to VCC or ground—VCC if a non-replaceable primary cell is connected to VBACKUP and ground if the VRTC output floats.

If the PMOS switch between VSYSIN and VRTC is open and VBACKUP exceeds 2.65 V, VRTC connects to VBACKUP through a PMOS switch. The PMOS switch drops a maximum of 375 mV at 30 mA, which should be considered if using VRTC. A typical application may connect VBACKUP to a primary Li button cell, but any battery that provides a voltage between 2.65 V and 6 V (that is, a single Li-Ion cell or a single boosted NiMH battery) is acceptable, to supply the VRTC output. *In systems with no backup battery, the VBACKUP pin should be connected to GND.*

If the switches between VRTC and VSYSIN or VBACKUP are open, the dedicated 3-V, 30-mA LDO, driven from VCC, connects to VRTC. This LDO is disabled if the voltage at the VSYSIN input exceeds 2.65 V.

Copyright © 2009–2018, Texas Instruments Incorporated

Device Functional Modes (continued)

Inside TPS65023-Q1 there is a switch (V_{MAX} switch) which selects the higher voltage between V_{CC} and V_{BACKUP}. This is used as the supply voltage for some basic functions. The functions powered from the output of the V_{MAX} switch are:

- $\overline{\text{INT}}$ output
- $\overline{\text{RESPWRON}}$ output
- $\overline{\text{HOT_RESET}}$ input
- $\overline{\text{LOW_BAT}}$ output
- $\overline{\text{PWRFAIL}}$ output
- Enable pins for DC-DC converters, LDO1 and LDO2
- Undervoltage lockout comparator (UVLO)
- Reference system with low-frequency timing oscillators
- $\overline{\text{LOW_BAT}}$ and $\overline{\text{PWRFAIL}}$ comparators

The main 2.25-MHz oscillator, and the I^2C interface are only powered from VCC.

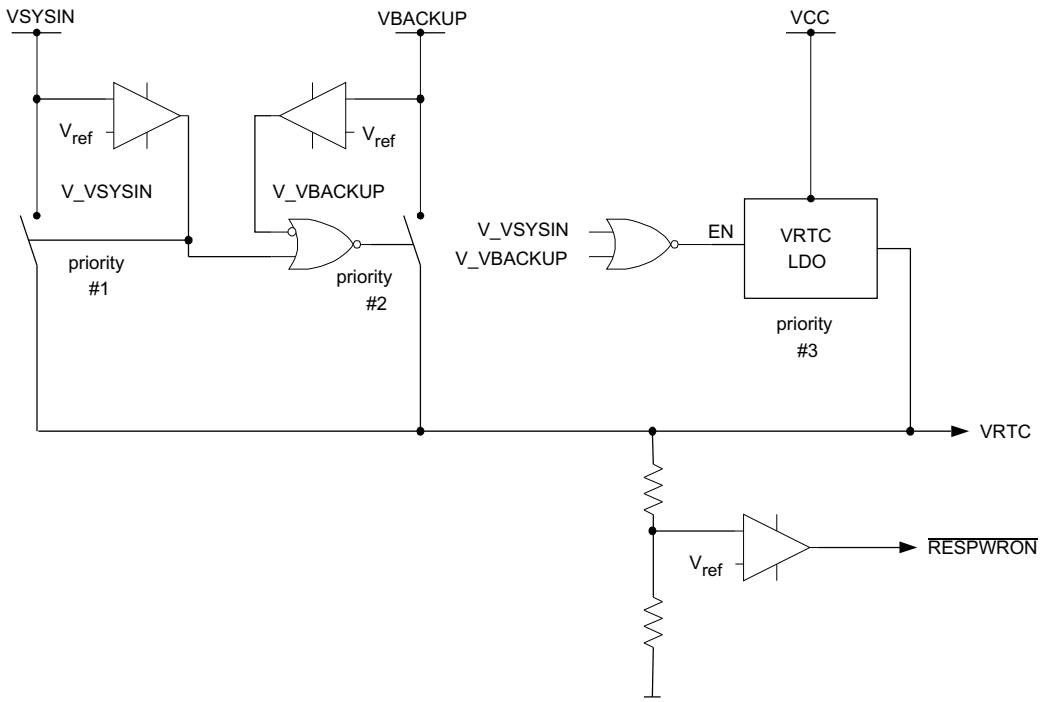

A. V_VSYSIN, V_VBACKUP thresholds: falling = 2.55 V, rising = 2.65 V ±3%

B. $\overline{\text{RESPWRON}}$ thresholds: falling = 2.4 V, rising = 2.52 V ±3%

Figure 27. Power Switches Block Diagram

Device Functional Modes (continued)

8.4.2 Power-Save Mode Operation (PSM)

As the load current decreases, the converters enter the power-save mode of operation. During PSM, the converters operate in a burst mode (PFM mode) with a frequency between 750 kHz and 2.25 MHz, nominal, for one burst cycle. However, the frequency between different burst cycles depends on the actual load current and is typically far less than the switching frequency, with a minimum quiescent current to maintain high efficiency.

To optimize the converter efficiency at light load, the average current is monitored, and if in PWM mode the inductor current remains below a certain threshold, then PSM is entered. The typical threshold to enter PSM is calculated as follows:

$$I_{PFMDCDC1\,enter} = \frac{VINDCDC1}{24\ \Omega}$$

$$I_{PFMDCDC2\,enter} = \frac{VINDCDC2}{26\ \Omega}$$

$$I_{PFMDCDC3\,enter} = \frac{VINDCDC3}{39\ \Omega} \quad (1)$$

During PSM, the output voltage is monitored with a comparator, and by maximum skip burst duration. As the output voltage falls below the threshold, set to the nominal V_O, the P-channel switch turns on, and the converter effectively delivers a constant current defined as follows.

$$I_{PFMDCDC1\,leave} = \frac{VINDCDC1}{18\ \Omega}$$

$$I_{PFMDCDC2\,leave} = \frac{VINDCDC2}{20\ \Omega}$$

$$I_{PFMDCDC3\,leave} = \frac{VINDCDC3}{29\ \Omega} \quad (2)$$

If the load is below the delivered current, then the output voltage rises until the same threshold is crossed in the other direction. All switching activity ceases, reducing the quiescent current to a minimum until the output voltage has again dropped below the threshold. The power-save mode is exited, and the converter returns to PWM mode if either of the following conditions is met:

- the output voltage drops 2% below the nominal V_O due to increasing load current
- the PFM burst time exceeds 16 × 1 / f_S (7.11 μs typical).

These control methods reduce the quiescent current to typically 14 μA per converter, and the switching activity to a minimum, thus achieving the highest converter efficiency. Setting the comparator thresholds at the nominal output voltage at light load current results in a low output-voltage ripple. The ripple depends on the comparator delay and the size of the output capacitor. Increasing capacitor values makes the output ripple tend to zero. The PSM is disabled through the I^2C interface to force the individual converters to stay in fixed-frequency PWM mode.

8.4.3 Low-Ripple Mode

Setting bit 3 in register CON-CTRL to 1 enables the low-ripple mode for all of the DC-DC converters if operated in PFM mode. For an output current less than approximately 10 mA, the output-voltage ripple in PFM mode is reduced, depending on the actual load current. The lower the actual output current on the converter, the lower the output ripple voltage. For an output current above 10 mA, there is only a minor difference in output-voltage ripple between PFM mode and low-ripple PFM mode. As this feature also increases switching frequency, it is used to keep the switching frequency above the audible range in PFM mode down to a low output current.

Copyright © 2009–2018, Texas Instruments Incorporated

Device Functional Modes (continued)

8.4.4 100% Duty-Cycle Low-Dropout Operation

The TPS65023-Q1 converters offer a low input-to-output voltage difference while still maintaining operation with the use of the 100% duty-cycle mode. In this mode, the P-channel switch is constantly turned on. This is particularly useful in battery-powered applications to achieve longest operation time by taking full advantage of the whole battery voltage range. The minimum input voltage required to maintain DC regulation depends on the load current and output voltage. Use Equation 3 to calculate the minimum input voltage.

$$V_{IN(min)} = V_{OUT(min)} + I_{OUT(max)} \times \left(r_{DS(ON)}\max + R_L\right)$$

where

- $I_{OUT(max)}$ = maximum load current (Note: ripple current in the inductor is zero under these conditions)
- $r_{DS(on)}$max = maximum P-channel switch $r_{DS(on)}$
- R_L = DC resistance of the inductor
- $V_{OUT(min)}$ = nominal output voltage minus 2% tolerance limit (3)

8.4.5 System Reset and Control Signals

The $\overline{\text{RESPWRON}}$ signal can be used as a global reset for the application. It is an open-drain output. The $\overline{\text{RESPWRON}}$ signal is generated according to the power-good comparator of VRTC, and remains low for $t_{nrespwron}$ seconds after VRTC has risen above 2.52 V (falling threshold is 2.4 V, 5% hysteresis). $t_{nrespwron}$ is set by an external capacitor at the TRESPWRON pin. 1 nF gives typically 100 ms. $\overline{\text{RESPWRON}}$ is also triggered by the $\overline{\text{HOT_RESET}}$ input. This input is internally debounced, with a filter time of typically 30 ms.

The $\overline{\text{PWRFAIL}}$ and $\overline{\text{LOW_BAT}}$ signals are generated by two voltage detectors using the PWRFAIL_SNS and LOWBAT_SNS input signals. Each input signal is compared to a 1-V threshold (falling edge) with 5% (50 mV) hysteresis.

The DCDC1 converter is reset to its default output voltage defined by the DEFDCDC1 input, when $\overline{\text{HOT_RESET}}$ is asserted. Other I^2C registers are not affected. Generally, the DCDC1 converter is set to its default voltage with one of these conditions: $\overline{\text{HOT_RESET}}$ active, VRTC lower than its threshold voltage, undervoltage lockout (UVLO) condition, or $\overline{\text{RESPWRON}}$ active.

8.4.5.1 DEFLDO1 and DEFLDO2

These two pins are used to set the default output voltage of the two 200-mA LDOs. The digital value applied to the pins is latched during power up and determines the initial output voltage according to Table 3. The voltage of both LDOs can be changed during operation with the I^2C interface as described in the interface description.

Table 3. VLDO1 and VLDO2 Voltage Options

DEFLDO2	DEFLDO1	VLDO1	VLDO2
0	0	1.3 V	3.3 V
0	1	2.8 V	3.3 V
1	0	1.3 V	1.8 V
1	1	1.8 V	3.3 V

8.4.5.2 Interrupt Management and the $\overline{\text{INT}}$ Pin

The $\overline{\text{INT}}$ pin combines the outputs of the PGOOD comparators from each DC-DC converter and the LDOs. The $\overline{\text{INT}}$ pin is used as a POWER_OK pin to indicate when all enabled supplies are in regulation. The $\overline{\text{INT}}$ pin remains active (low state) during power up as long as all enabled power rails are below their regulation limit. Once the last enabled power rail is within regulation, the $\overline{\text{INT}}$ pin transitions to a high state.

During operation, if one of the enabled supplies goes out of regulation, $\overline{\text{INT}}$ transitions to a low state, and the corresponding bit in the PGOODZ register goes high. If the supply goes back to its regulation limits, $\overline{\text{INT}}$ transitions back to a high state.

While $\overline{INT}$ is in an active low state, reading the PGOODZ register through the I²C bus forces $\overline{INT}$ into a high-Z state. Because this pin requires an external pullup resistor, the $\overline{INT}$ pin transitions to a logic-high state even though the supply in question is still out of regulation. The corresponding bit in the PGOODZ register still indicates that the power rail is out of regulation.

Interrupts can be masked using the MASK register. The default operation is not to mask any DCDC or LDO interrupts, because these provide the POWER_OK function.

8.5 Programming

8.5.1 Power-Up Sequencing

The TPS65023-Q1 power-up sequencing is designed to be entirely flexible and customer driven. This is achieved by providing separate enable pins for each switch-mode converter and a common enable signal for the LDOs. The relevant control pins are described in Table 4.

Table 4. Control Pins and Status Outputs For DC-DC Converters

PIN NAME	I/O	FUNCTION
DEFDCDC3	I	Defines the default voltage of the VDCDC3 switching converter. DEFDCDC3 = 0 defaults VDCDC3 to 1.8 V, DEFDCDC3 = VCC defaults VDCDC3 to 3.3 V.
DEFDCDC2	I	Defines the default voltage of the VDCDC2 switching converter. DEFDCDC2 = 0 defaults VDCDC2 to 1.8 V, DEFDCDC2 = VCC defaults VDCDC2 to 3.3 V.
DEFDCDC1	I	Defines the default voltage of the VDCDC1 switching converter. DEFDCDC1 = 0 defaults VDCDC1 to 1.2 V, DEFDCDC1 = VCC defaults VDCDC1 to 1.6 V.
DCDC3_EN	I	Set DCDC3_EN = 0 to disable and DCDC3_EN = 1 to enable the VDCDC3 converter
DCDC2_EN	I	Set DCDC2_EN = 0 to disable and DCDC2_EN = 1 to enable the VDCDC2 converter
DCDC1_EN	I	Set DCDC1_EN = 0 to disable and DCDC1_EN = 1 to enable the VDCDC1 converter
$\overline{HOT_RESET}$	I	The $\overline{HOT_RESET}$ pin generates a reset ($\overline{RESPWRON}$) for the processor.$\overline{HOT_RESET}$ does not alter any TPS65023-Q1 settings except the output voltage of VDCDC1. Activating $\overline{HOT_RESET}$ sets the voltage of VDCDC1 to its default value defined with the DEFDCDC1 pin. $\overline{HOT_RESET}$ is internally de-bounced by the TPS65023-Q1.
$\overline{RESPWRON}$	O	$\overline{RESPWRON}$ is held low when power is initially applied to the TPS65023-Q1. The VRTC voltage is monitored: $\overline{RESWPRON}$ is low when VRTC < 2.4 V and remains low for a time defined by the external capacitor at the TRESPWRON pin. $\overline{RESPWRON}$ can also be forced low by activation of the $\overline{HOT_RESET}$ pin.
TRESPWRON	I	Connect a capacitor here to define the RESET time at the $\overline{RESPWRON}$ pin (1 nF typically gives 100 ms).

8.5.2 Serial Interface

The serial interface is compatible with the standard- and fast-mode I²C specifications, allowing transfers at up to 400 kHz. The interface adds flexibility to the power-supply solution, enabling most functions to be programmed to new values, depending on the instantaneous application requirements and charger status to be monitored. Register contents remain intact as long as V_{CC} remains above 2 V. The TPS65023-Q1 has a 7-bit address: 1001000; other addresses are available on contact with the factory. Attempting to read data from the register addresses not listed in this section results in FFh being read out.

For normal data transfer, DATA is allowed to change only when CLK is low. Changes when CLK is high are reserved for indicating the start and stop conditions. During data transfer, the data line must remain stable whenever the clock line is high. There is one clock pulse per bit of data. Each data transfer is initiated with a start condition and terminated with a stop condition. When addressed, the TPS65023-Q1 device generates an acknowledge bit after the reception of each byte. The master device (microprocessor) must generate an extra clock pulse that is associated with the acknowledge bit. The TPS65023-Q1 device must pull down the DATA line during the acknowledge clock pulse so that the DATA line is a stable low during the high period of the acknowledge clock pulse. The DATA line is a stable low during the high period of the acknowledge-related clock pulse. Setup and hold times must be taken into account. During read operations, a master must signal the end of data to the slave by not generating an acknowledge bit on the last byte that was clocked out of the slave. In this case, the slave TPS65023-Q1 device must leave the data line high to enable the master to generate the stop condition.

Copyright © 2009–2018, Texas Instruments Incorporated

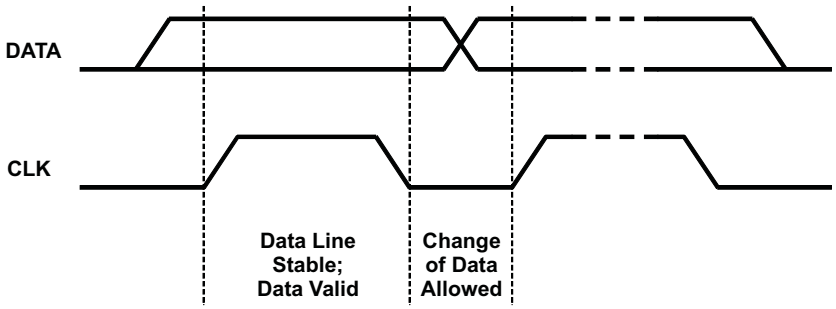

Figure 28. Bit Transfer on the Serial Interface

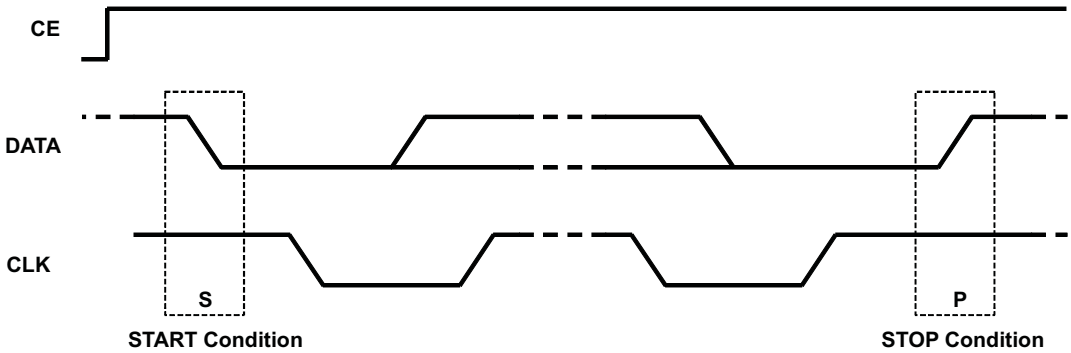

Figure 29. Start and Stop Conditions

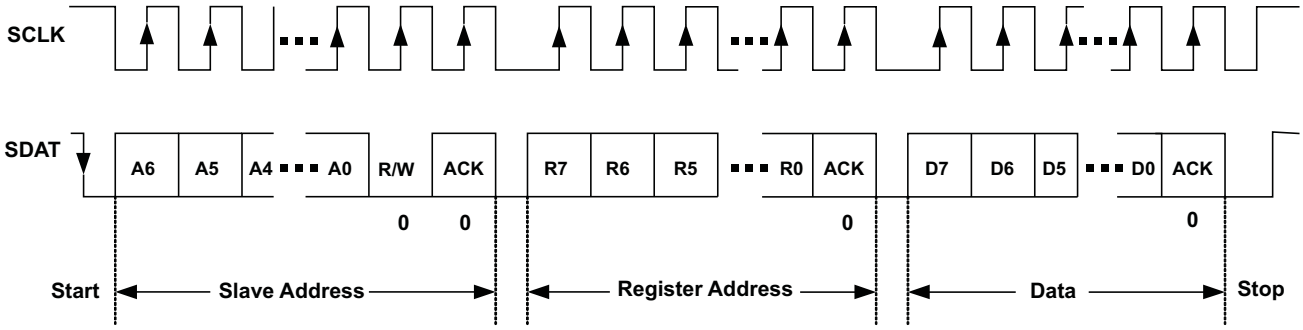

Note: SLAVE = TPS65020

Figure 30. Serial Interface Write to TPS65023-Q1 Device

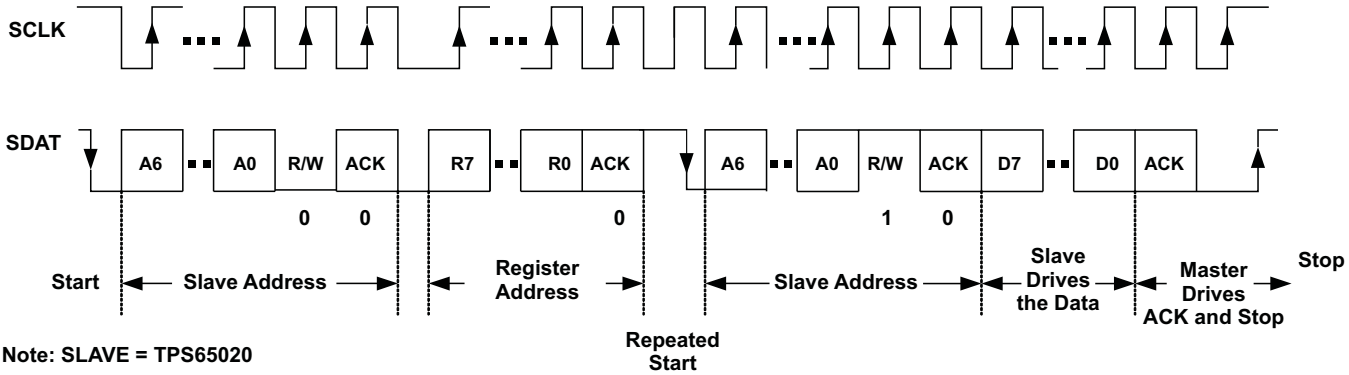

Note: SLAVE = TPS65020

Figure 31. Serial Interface Read from TPS65023-Q1: Protocol A

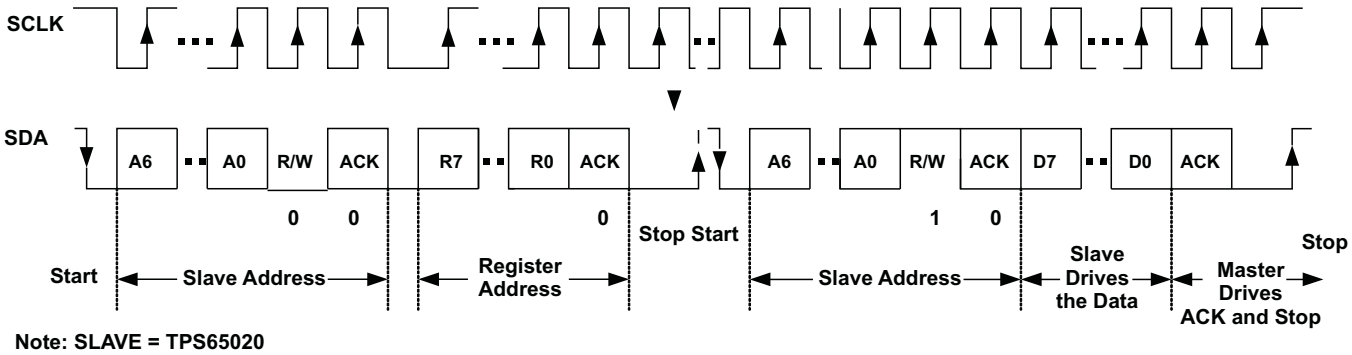

Figure 32. Serial Interface Read from TPS65023-Q1: Protocol B

8.6 Register Maps

8.6.1 VERSION Register (address: 00h) Read-Only

Figure 33. VERSION Register Fields

7	6	5	4	3	2	1	0
VERSION							
R-0	R-0	R-1	R-0	R-0	R-0	R-1	R-1

LEGEND: R/W = Read/Write; R = Read only; -n = value after reset

Copyright © 2009–2018, Texas Instruments Incorporated

8.6.2 PGOODZ Register (address: 01h) Read-Only

Figure 34. PGOODZ Register Fields

7	6	5	4	3	2	1	0
PWRFAILZ	LOWBATTZ	PGOODZ VDCDC1	PGOODZ VDCDC2	PGOODZ VDCDC3	PGOODZ LDO2	PGOODZ LDO1	
R	R	R	R	R	R	R	R

LEGEND: R/W = Read/Write; R = Read only; -n = value after reset

Table 5. PGOODZ Register Field Descriptions

Bit	Field	Type	Reset	Description
7	PWRFAILZ	R	0	Set by signal: PWRFAIL 0 = indicates that the PWRFAIL_SNS input voltage is above the 1-V threshold. 1 = indicates that the PWRFAIL_SNS input voltage is below the 1-V threshold.
6	LOWBATTZ	R	0	Set by signal: LOWBATT 0 = indicates that the LOWBATT_SNS input voltage is above the 1-V threshold. 1 = indicates that the LOWBATT_SNS input voltage is below the 1-V threshold.
5	PGOODZ VDCDC1	R	0	Set by signal: PGOODZ_VDCDC1 0 = indicates that the VDCDC1 converter output voltage is within its nominal range. This bit is zero if the VDCDC1 converter is disabled. 1 = indicates that the VDCDC1 converter output voltage is below its target regulation voltage.
4	PGOODZ VDCDC2	R	0	Set by signal: PGOODZ_VDCDC2 0 = indicates that the VDCDC2 converter output voltage is within its nominal range. This bit is zero if the VDCDC2 converter is disabled. 1 = indicates that the VDCDC2 converter output voltage is below its target regulation voltage.
3	PGOODZ VDCDC3	R	0	Set by signal: PGOODZ_VDCDC3 0 = indicates that the VDCDC3 converter output voltage is within its nominal range. This bit is zero if the VDCDC3 converter is disabled and during a DVM-controlled output-voltage transition. 1 = indicates that the VDCDC3 converter output voltage is below its target regulation voltage.
2	PGOODZ LDO2	R	0	Set by signal: PGOODZ_LDO2 0 = indicates that the LDO2 output voltage is within its nominal range. This bit is zero if LDO2 is disabled. 1 = indicates that LDO2 output voltage is below its target regulation voltage.
1	PGOODZ LDO1	R	0	Set by signal: PGOODZ_LDO1 0 = indicates that the LDO1 output voltage is within its nominal range. This bit is zero if LDO1 is disabled. 1 = indicates that the LDO1 output voltage is below its target regulation voltage.

8.6.3 MASK Register (address: 02h)

Figure 35. MASK Register Fields

7	6	5	4	3	2	1	0
MASK PWRFAILZ	MASK LOWBATTZ	MASK VDCDC1	MASK VDCDC2	MASK VDCDC3	MASK LDO2	MASK LDO1	
R/W-1	R/W-1	R/W-0	R/W-0	R/W-0	R/W-0	R/W-0	R-0

LEGEND: R/W = Read/Write; R = Read only; -n = value after reset

The MASK register can be used to mask particular fault conditions from appearing at the $\overline{\text{INT}}$ pin. MASK<n> = 1 masks PGOODZ<n>.

8.6.4 REG_CTRL Register (address: 03h)

The REG_CTRL register is used to disable or enable the power supplies through the serial interface. The contents of the register are logically ANDed with the enable pins to determine the state of the supplies. A UVLO condition resets the REG_CTRL to 0xFF, so the state of the supplies defaults to the state of the enable pin. The REG_CTRL bits are automatically reset to default when the corresponding enable pin is low.

Figure 36. REG_CTRL Register Fields

7	6	5	4	3	2	1	0
		VDCDC1 ENABLE	VDCDC2 ENABLE	VDCDC3 ENABLE	LDO2 ENABLE	LDO1 ENABLE	
R-1	R-1	R/W-1	R/W-1	R/W-1	R/W-1	R/W-1	R-1

LEGEND: R/W = Read/Write; R = Read only; -n = value after reset

Table 6. REG_CTRL Register Field Descriptions

Bit	Field	Type	Reset	Description
5	VDCDC1 ENABLE	R/W	1	Set by signal: DCDC1_ENZ DCDC1 enable. This bit is logically ANDed with the state of the DCDC1_EN pin to turn on the DCDC1 converter. Reset to 1 by a UVLO condition, the bit can be written to 0 or 1 through the serial interface. The bit is reset to 1 when the DCDC1_EN pin is pulled to GND, allowing DCDC1 to turn on when DCDC1_EN returns high.
4	VDCDC2 ENABLE	R/W	1	Set by signal: DCDC2_ENZ DCDC2 enable. This bit is logically ANDed with the state of the DCDC2_EN pin to turn on the DCDC2 converter. Reset to 1 by a UVLO condition, the bit can be written to 0 or 1 through the serial interface. The bit is reset to 1 when the DCDC2_EN pin is pulled to GND, allowing DCDC2 to turn on when DCDC2_EN returns high.
3	VDCDC3 ENABLE	R/W	1	Set by signal: DCDC3_ENZ DCDC3 enable. This bit is logically ANDed with the state of the DCDC3_EN pin to turn on the DCDC3 converter. Reset to 1 by a UVLO condition, the bit can be written to 0 or 1 through the serial interface. The bit is reset to 1 when the DCDC3_EN pin is pulled to GND, allowing DCDC3 to turn on when DCDC3_EN returns high.
2	LDO2 ENABLE	R/W	1	Set by signal: LDO_ENZ LDO2 enable. This bit is logically ANDed with the state of the LDO2_EN pin to turn on LDO2. Reset to 1 by a UVLO condition, the bit can be written to 0 or 1 through the serial interface. The bit is reset to 1 when the LDO_EN pin is pulled to GND, allowing LDO2 to turn on when LDO_EN returns high.
1	LDO1 ENABLE	R/W	1	Set by signal: LDO_ENZ LDO1 enable. This bit is logically ANDed with the state of the LDO1_EN pin to turn on LDO1. Reset to 1 by a UVLO condition, the bit can be written to 0 or 1 through the serial interface. The bit is reset to 1 when the LDO_EN pin is pulled to GND, allowing LDO1 to turn on when LDO_EN returns high.

Copyright © 2009–2018, Texas Instruments Incorporated

8.6.5 CON_CTRL Register (address: 04h)

Figure 37. CON_CTRL Register Fields

7	6	5	4	3	2	1	0
DCDC2 PHASE1	DCDC2 PHASE0	DCDC3 PHASE1	DCDC3 PHASE0	LOW RIPPLE	FPWM DCDC2	FPW DCDC1	FPWM DCDC3
R/W-1	R/W-0	R/W-1	R/W-1	R/W-0	R/W-0	R/W-0	R/W-0

LEGEND: R/W = Read/Write; R = Read only; -n = value after reset

The CON_CTRL register is used to force any or all of the converters into forced PWM operation when low output-voltage ripple is vital. It is also used to control the phase shift between the three converters to minimize the input rms current, hence reduce the required input blocking capacitance. The DCDC1 converter is taken as the reference and consequently has a fixed-zero phase shift.

Table 7. CON_CTRL Register Field Descriptions

Bit	Field	Type	Reset	Description
7–6	DCDC2 PHASE1, PHASE0	R/W	10	DCDC2 Converter delay is set by these bits. 00 = Zero 01 = 1/4 cycle 10 = 1/2 cycle 11 = 3/4 cycle
5–4	DCDC3 PHASE1, PHASE0	R/W	11	DCDC3 Converter delay is set by these bits. 00 = Zero 01 = 1/4 cycle 10 = 1/2 cycle 11 = 3/4 cycle
3	LOW RIPPLE:	R/W	0	0 = PFM mode operation optimized for high efficiency for all converters 1 = PFM mode operation optimized for low output-voltage ripple for all converters
2	FPWM DCDC2:	R/W	0	0 = DCDC2 converter operates in PWM or PFM mode 1 = DCDC2 converter is forced into fixed-frequency PWM mode.
1	FPWM DCDC1:	R/W	0	0 = DCDC1 converter operates in PWM or PFM mode 1 = DCDC1 converter is forced into fixed-frequency PWM mode.
0	FPWM DCDC3:	R/W	0	0 = DCDC3 converter operates in PWM or PFM mode 1 = DCDC3 converter is forced into fixed-frequency PWM mode.

Copyright © 2009–2018, Texas Instruments Incorporated

8.6.6 CON_CTRL2 Register (address: 05h)

Figure 38. CON_CTRL2 Register Fields

7	6	5	4	3	2	1	0
GO	Core adj allowed				DCDC2 discharge	DCDC1 discharge	DCDC3 discharge
R/W-0	R/W-1	R/W-0	R/W-0	R/W-0	R/W-0	R/W-0	R/W-0

LEGEND: R/W = Read/Write; R = Read only; -n = value after reset

The CON_CTRL2 register can be used to take control the inductive converters.

RESET(1): CON_CTRL2[6] is reset to its default value by one of these events:

- Undervoltage lockout (UVLO)
- HOT_RESET pulled low
- RESPWRON active
- VRTC below threshold

Table 8. CON_CTRL2 Register Field Descriptions

Bit	Field	Type	Reset	Description
7	GO	R/W	0	0 = no change in the output voltage for the DCDC1 converter 1 = the output voltage of the DCDC1 converter is changed to the value defined in DEFCORE with the slew rate defined in DEFSLEW. This bit is automatically cleared when the DVM transition is complete. The transition is considered complete in this case when the desired output voltage code has been reached, not when the VDCDC3 output voltage is actually in regulation at the desired voltage.
6	CORE ADJ allowed	R/W	1	0 = the output voltage is set with the I^2C register 1 = DEFDCDC1 is either connected to GND or VCC or an external voltage divider. When connected to GND or VCC, VDCDC1 defaults to 1.2 V or 1.6 V, respectively, at start-up.
2–0	DCDC2, DCDC1, DCDC3 discharge	R/W	000	0 = the output capacitor of the associated converter is not actively discharged when the converter is disabled. 1 = the output capacitor of the associated converter is actively discharged when the converter is disabled. This decreases the fall time of the output voltage at light load.

Copyright © 2009–2018, Texas Instruments Incorporated

8.6.7 DEFCORE Register (address: 06h)

Figure 39. DEFCORE Register Fields

7	6	5	4	3	2	1	0
			CORE4	CORE3	CORE2	CORE1	CORE0
R/W-0	R/W-0	R/W-0	R/W-1	R/W-DEFDCDC1	R/W-DEFDCDC1	R/W-DEFDCDC1	R/W-DEFDCDC1

LEGEND: R/W = Read/Write; R = Read only; -n = value after reset

RESET(1): DEFCORE is reset to its default value by one of these events:

- Undervoltage lockout (UVLO)
- $\overline{\text{HOT_RESET}}$ pulled low
- $\overline{\text{RESPWRON}}$ active
- VRTC below threshold

Table 9. DEFCORE Register Field Descriptions

Bit	Field	Type	Reset	Description
4–0	CORE4, CORE3, CORE2, CORE1,CORE0	R/W	10100	These bits set VDCDC1. 00000 = 0.8 V 00001 = 0.825 V 00010 = 0.85 V 00011 = 0.875 V 00100 = 0.9 V 00101 = 0.925 V 00110 = 0.95 V 00111 = 0.975 V 01000 = 1 V 01001 = 1.025 V 01010 = 1.05 V 01011 = 1.075 V 01100 = 1.1 V 01101 = 1.125 V 01110 = 1.15 V 01111 = 1.175 V 10000 = 1.2 V 10001 = 1.225 V 10010 = 1.25 V 10011 = 1.275 V 10100 = 1.3 V 10101 = 1.325 V 10110 = 1.35 V 10111 = 1.375 V 11000 = 1.4 V 11001 = 1.425 V 11010 = 1.45 V 11011 = 1.475 V 11100 = 1.5 V 11101 = 1.525 V 11110 = 1.55 V 11111 = 1.6 V

8.6.8 DEFSLEW Register (address: 07h)

Figure 40. DEFSLEW Register Fields

7	6	5	4	3	2	1	0
					SLEW2	SLEW1	SLEW0
R/W-0	R/W-0	R/W-0	R/W-0	R/W-0	R/W-1	R/W-1	R/W-0

LEGEND: R/W = Read/Write; R = Read only; -n = value after reset

Table 10. DEFSLEW Register Field Descriptions

Bit	Field	Type	Reset	Description
2–0	SLEW2, SLEW1, SLEW0	R/W	110	These bits set the VDCDC1 SLEW RATE 000 = 0.225 mV/µs 001 = 0.45 mV/µs 010 = 0.9 mV/µs 011 = 1.8 mV/µs 100 = 3.6 mV/µs 101 = 7.2 mV/µs 110 = 14.4 mV/µs 111 = Immediate

8.6.9 LDO_CTRL Register (address: 08h)

Figure 41. LDO_CTRL Register Fields

7	6	5	4	3	2	1	0
Reserved	LDO2_2	LDO2_1	LDO2_0	Reserved	LDO1_2	LDO1_1	LDO1_0
R/W-0	R/W-DEFLDOx	R/W-DEFLDOx	R/W-DEFLDOx	R/W-0	R/W-DEFLDOx	R/W-DEFLDOx	R/W-DEFLDOx

The default value for this register is set with DEFLDO1 and DEFLDO2.

LEGEND: R/W = Read/Write; R = Read only; -n = value after reset

The LDO_CTRL registers can be used to set the output voltage of LDO1 and LDO2. LDO_CTRL[7] and LDO_CTRL[3] are reserved and should always be written to **0**.

The default voltage is set with DEFLDO1 and DEFLDO2 pins as described in Table 11.

Table 11. LDO_CTRL Register Field Descriptions

Bit	Field	Type	Reset	Description
6–4	LDO2_2, LDO2_1, LDO2_0	R/W	See (1)	000 = 1.05 V 001 = 1.2 V 010 = 1.3 V 011 = 1.8 V 100 = 2.5 V 101 = 2.8 V 110 = 3 V 111 =3.3 V
2–0	LDO1_2, LDO1_1, LDO1_0	R/W	See (1)	000 = 1 V 001 = 1.1 V 010 = 1.3 V 011 = 1.8 V 100 = 2.2 V 101 = 2.6 V 110 = 2.8 V 111 = 3.15 V

(1) Table 3 describes the default voltage options based on DEFLDO1 and DEFLDO2 pins.

Copyright © 2009–2018, Texas Instruments Incorporated

9 Application and Implementation

NOTE

Information in the following applications sections is not part of the TI component specification, and TI does not warrant its accuracy or completeness. TI's customers are responsible for determining suitability of components for their purposes. Customers should validate and test their design implementation to confirm system functionality.

9.1 Application Information

9.1.1 Reset Condition of DCDC1

If DEFDCDC1 is connected to ground and DCDC1_EN is pulled high after VINDCDC1 is applied, the output voltage of DCDC1 defaults to 1.225 V instead of 1.2 V (high by 2%). Figure 42 illustrates the problem.

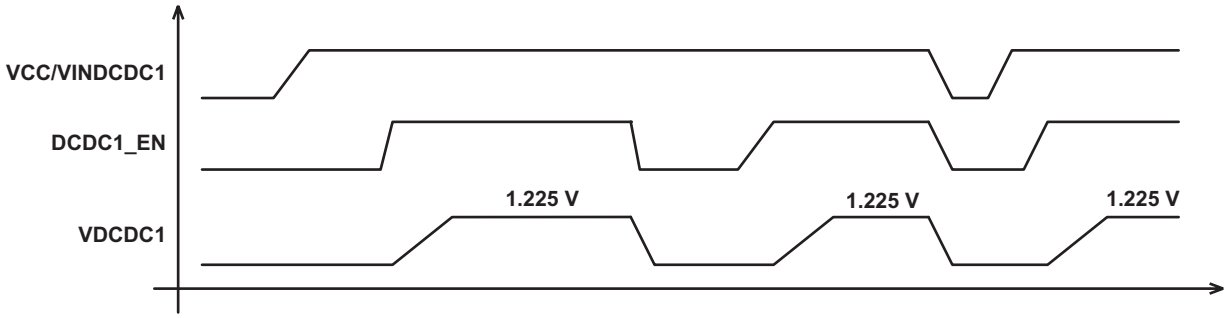

Figure 42. Default DCDC1

Workaround 1: Tie DCDC1_EN to VINDCDC1 (Figure 43)

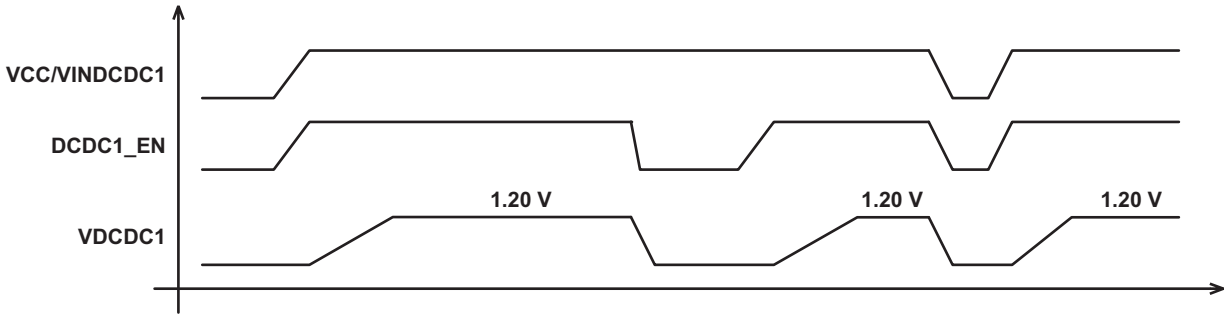

Figure 43. Workaround 1

Application Information (continued)

Workaround 2: Write the correct voltage to the DEF_CORE register through I^2C. This can be done before or after the converter is enabled. If written before the enable, the only bit changed is DEF_CORE[0]. The voltage is 1.2 V, however, when the enable is pulled high (Figure 44).

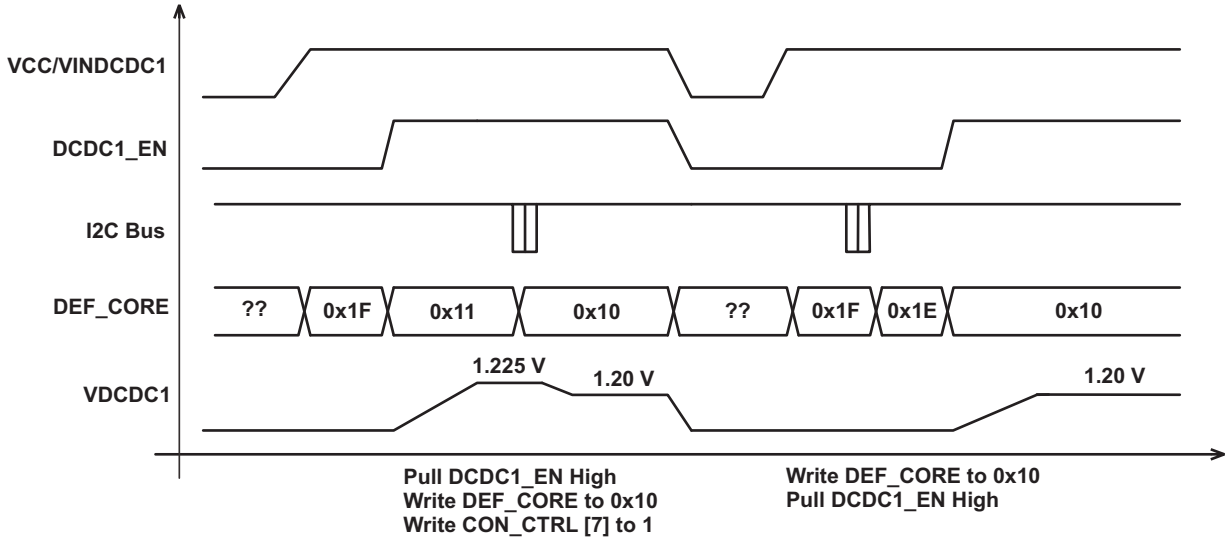

Figure 44. Workaround 2

Workaround 3: Generate a $\overline{\text{HOT_RESET}}$ after enabling DCDC1 (Figure 45)

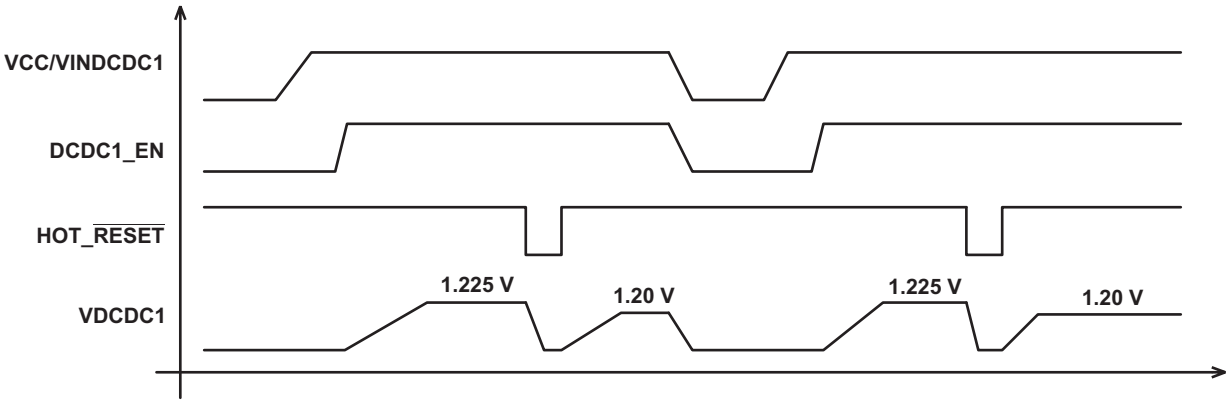

Figure 45. Workaround 3

Copyright © 2009–2018, Texas Instruments Incorporated

9.2 Typical Application

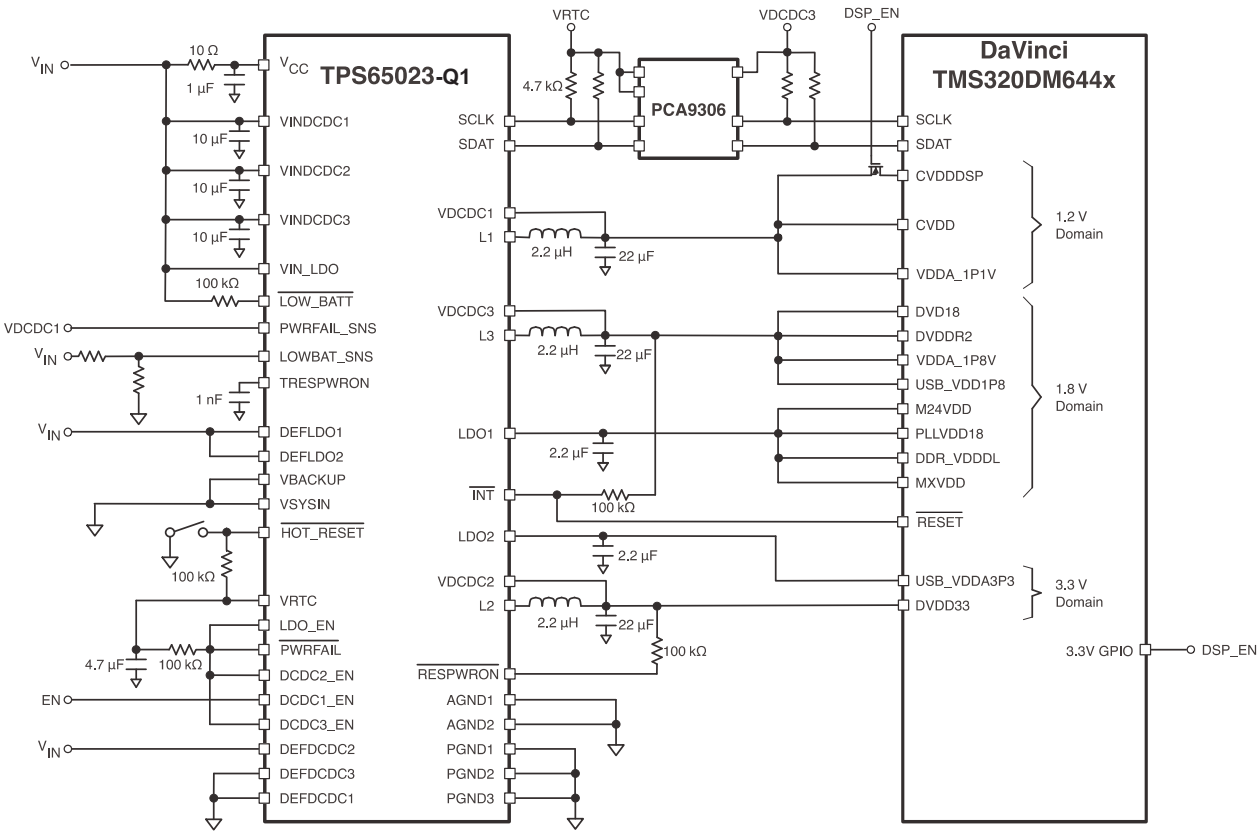

Figure 46. Typical Configuration for the Texas Instruments TMS320DM644x DaVinci Processors

9.2.1 Design Requirements

The TPS65023-Q1 devices have only a few design requirements. Use the following parameters for the design examples:

- 1-µF bypass capacitor on VCC, located as close as possible to the VCC pin to ground.
- VCC and VINDCDCx must be connected to the same voltage supply with minimal voltage difference.
- Input capacitors must be present on the VINDCDCx and VIN_LDO supplies if used.
- Output inductor and capacitors must be used on the outputs of the DC-DC converters if used.
- Output capacitors must be used on the outputs of the LDOs if used.

Typical Application (continued)

9.2.2 Detailed Design Procedure

9.2.2.1 Inductor Selection for the DC-DC Converters

Each of the converters in the TPS65023-Q1 typically uses a 2.2-µH output inductor. Larger or smaller inductor values are used to optimize the performance of the device for specific operation conditions. The selected inductor must be rated for its DC resistance and saturation current. The DC resistance of the inductance influences directly the efficiency of the converter. Therefore, an inductor with lowest DC resistance should be selected for highest efficiency.

For a fast transient response, TI recommends a 2.2-µH inductor in combination with a 22-µF output capacitor.

Equation 4 calculates the maximum inductor current under static load conditions. The saturation current of the inductor should be rated higher than the maximum inductor current as calculated with Equation 4. This is needed because during a heavy load transient the inductor current rises above the value calculated under Equation 4.

$$\Delta I_L = V_{OUT} \times \frac{1 - \frac{V_{OUT}}{V_{IN}}}{L \times f} \tag{4}$$

$$I_{L(max)} = I_{OUT(max)} + \frac{\Delta I_L}{2}$$

where

- f = Switching frequency (2.25 MHz typical)
- L = Inductor value
- ΔI_L = Peak-to-peak inductor ripple current
- I_{LMAX} = Maximum inductor current
- (5)

The highest inductor current occurs at maximum V_{IN}.

Open-core inductors have a soft saturation characteristic, and they can usually handle higher inductor currents versus a comparable shielded inductor.

A more-conservative approach is to select the inductor current rating just for the maximum switch current of the TPS65023-Q1 (2 A for the VDCDC1 and VDCDC2 converters, and 1.5 A for the VDCDC3 converter). The core material from inductor to inductor differs and has an impact on the efficiency, especially at high switching frequencies.

See Table 12 and the typical applications for possible inductors.

Table 12. Tested Inductors

DEVICE	INDUCTOR VALUE	TYPE	COMPONENT SUPPLIER
All converters	2.2 µH	LPS4012-222LMB	Coilcraft
	2.2 µH	VLCF4020T-2R2N1R7	TDK

9.2.2.2 Output Capacitor Selection

The advanced fast-response voltage-mode control scheme of the inductive converters implemented in the TPS65023-Q1 allow the use of small ceramic capacitors with a typical value of 10 µF for each converter without having large output-voltage under- and overshoots during heavy load transients. Ceramic capacitors having low ESR values have the lowest output-voltage ripple and are recommended. See Table 13 for recommended components.

If ceramic output capacitors are used, the capacitor rms ripple-current rating always meets the application requirements. Just for completeness, the rms ripple current is calculated as:

$$I_{RMSCOUT} = V_{OUT} \times \frac{1 - \frac{V_{OUT}}{V_{IN}}}{L \times f} \times \frac{1}{2 \times \sqrt{3}} \tag{6}$$

Copyright © 2009–2018, Texas Instruments Incorporated

At nominal load current, the inductive converters operate in PWM mode. The overall output-voltage ripple is the sum of the voltage spike caused by the output capacitor ESR plus the voltage ripple caused by charging and discharging the output capacitor:

$$\Delta V_{OUT} = V_{OUT} \times \frac{1 - \frac{V_{OUT}}{V_{IN}}}{L \times f} \times \left(\frac{1}{8 \times C_{OUT} \times f} + ESR \right)$$

where

- the highest output-voltage ripple occurs at the highest input-voltage V_{IN} (7)

At light load currents, the converters operate in PSM and the output-voltage ripple is dependent on the output-capacitor value. The output-voltage ripple is set by the internal comparator delay and the external capacitor. The typical output-voltage ripple is less than 1% of the nominal output voltage.

9.2.2.3 Input Capacitor Selection

Because of the nature of the buck converter having a pulsating input current, a low-ESR input capacitor is required for best input-voltage filtering and minimizing the interference with other circuits caused by high input-voltage spikes. Each DC-DC converter requires a 10-µF ceramic input capacitor on its input pin VINDCDCx. The input capacitor is increased without any limit for better input-voltage filtering. The VCC pin is separated from the input for the DC-DC converters. A filter resistor of up to 10R and a 1-µF capacitor are used for decoupling the VCC pin from switching noise. Note that the filter resistor may affect the UVLO threshold, because up to 3 mA can flow through this resistor into the VCC pin when all converters are running in PWM mode.

Table 13. Possible Capacitors

CAPACITOR VALUE	CASE SIZE	COMPONENT SUPPLIER	COMMENTS
22 µF	1206	TDK C3216X5R0J226M	Ceramic
22 µF	1206	Taiyo Yuden JMK316BJ226ML	Ceramic
22 µF	0805	TDK C2012X5R0J226MT	Ceramic
22µF	0805	Taiyo Yuden JMK212BJ226MG	Ceramic
10 µF	0805	Taiyo Yuden JMK212BJ106M	Ceramic
10 µF	0805	TDK C2012X5R0J106M	Ceramic

9.2.2.4 Output Voltage Selection

The DEFDCDC1, DEFDCDC2, and DEFDCDC3 pins are used to set the output voltage for each step-down converter. See Table 14 for the default voltages if the pins are pulled to GND or to VCC. If a different voltage is needed, an external resistor divider can be added to the DEFDCDCx pin as shown in Figure 47.

The output voltage of VDCDC1 is set with the I^2C interface. If the voltage is changed from the default, using the DEFCORE register, the output voltage only depends on the register value. Any resistor divider at DEFDCDC1 does not change the voltage set with the register.

Table 14. DCDC1, DCDC2, and DCDC3 Default Voltage Levels

PIN	LEVEL	DEFAULT OUTPUT VOLTAGE
DEFDCDC1	VCC	1.6 V
	GND	1.2 V
DEFDCDC2	VCC	3.3 V
	GND	1.8 V
DEFDCDC3	VCC	3.3 V
	GND	1.8 V

Using an external resistor divider at DEFDCDCx:

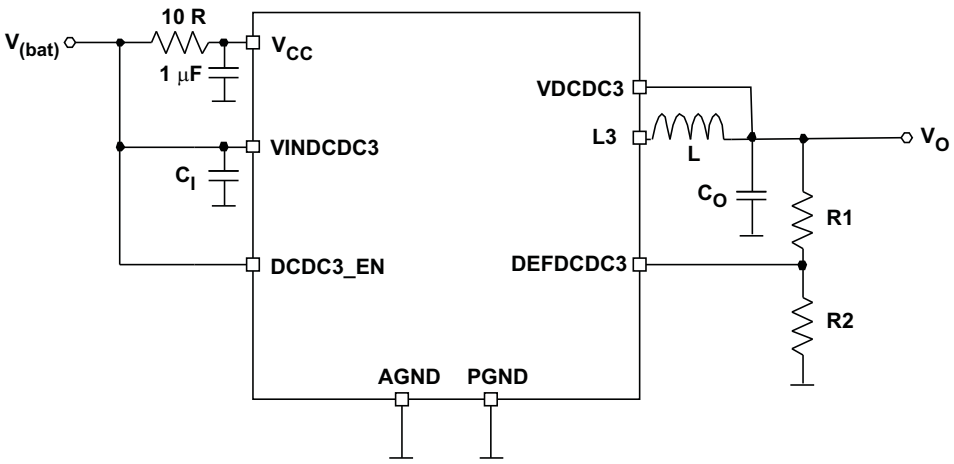

Figure 47. External Resistor Divider

When a resistor divider is connected to DEFDCDCx, the output voltage can be set from 0.6 V up to the input voltage $V_{(bat)}$. The total resistance (R1 + R2) of the voltage divider should be kept in the 1-MR range to maintain a high efficiency at light load.

$V_{(DEFDCDCx)}$ = 0.6 V

$$V_{OUT} = V_{DEFDCDCx} \times \frac{R1 + R2}{R2} \qquad R1 = R2 \times \left(\frac{V_{OUT}}{V_{DEFDCDCx}} \right) - R2 \tag{8}$$

9.2.2.5 VRTC Output

TI recommends adding a 4.7-µF (minimum) capacitor to the VRTC pin.

9.2.2.6 LDO1 and LDO2

The LDOs in the TPS65023-Q1 are general-purpose LDOs which are stable using ceramic capacitors. The minimum output capacitor required is 2.2 µF. The LDO output voltages can be changed to different values between 1 V and 3.3 V using the I^2C interface. Therefore, they can also be used as general-purpose LDOs in applications powering processors different from DaVinci processors. The supply voltage for the LDOs must be connected to the VINLDO pin, giving the flexibility to connect the lowest voltage available in the system and providing the highest efficiency.

9.2.2.7 TRESPWRON

This is the input to a capacitor that defines the reset delay time after the voltage at VRTC rises above 2.52 V. The timing is generated by charging and discharging the capacitor with a current of 2 µA between a threshold of 0.25 V and 1 V for 128 cycles. A 1-nF capacitor gives a delay time of 100 ms.

$$t_{(reset)} = 2 \times 128 \times \left(\frac{(1\,V - 0.25\,V) \times C_{(reset)}}{2\,\mu A} \right)$$

where

- $t_{(reset)}$ is the reset delay time
- $C_{(reset)}$ is the capacitor connected to the TRESPWRON pin (9)

Copyright © 2009–2018, Texas Instruments Incorporated

9.2.2.8 V_{CC} Filter

An RC filter connected at the VCC input is used to keep noise from the internal supply for the band-gap and other analog circuitry. A typical value of 1 Ω and 1 μF is used to filter the switching spikes generated by the DC-DC converters. A larger resistor than 10 Ω should not be used, because the current into VCC of up to 3 mA causes a voltage drop at the resistor causing the undervoltage lockout circuitry connected at VCC internally to switch off too early.

9.2.3 Application Curves

Graphs were taken using the EVM with the inductor and output capacitor combinations found in Table 1.

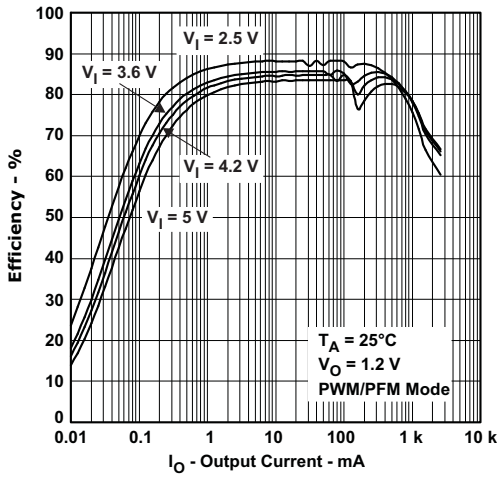

Figure 48. DCDC1 Efficiency

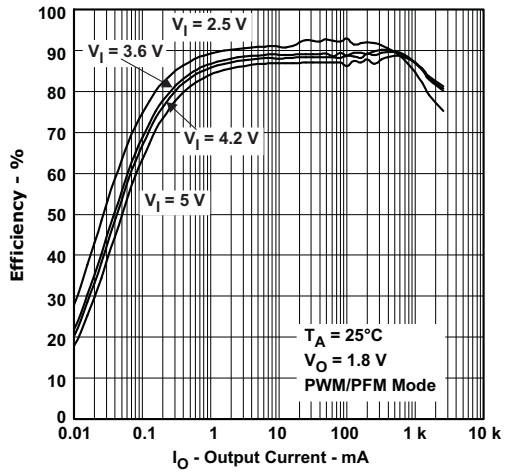

Figure 49. DCDC2 Efficiency

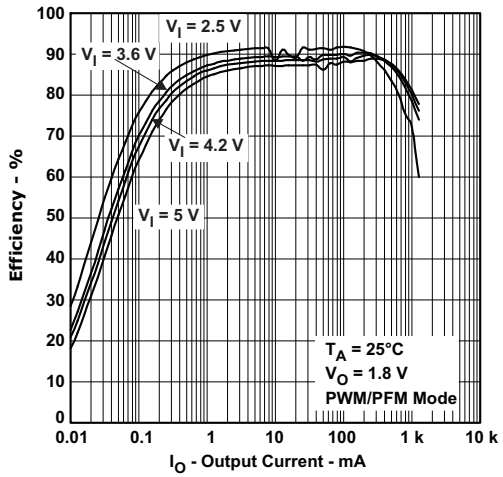

Figure 50. DCDC3 Efficiency

10 Power Supply Recommendations

For a supply voltage on pins VCC, VINDCDC1, VINDCDC2, and VINDCDC3 below 3 V, TI recommends enabling the DCDC1, DCDC2, and DCDC3 converters in sequence. If all 3 step-down converters are enabled at the same time while the supply voltage is close to the internal reset detection threshold, a reset may be generated during power up. Therefore TI recommends enabling the DC-DC converters in sequence. This can be done by driving one or two of the enable pins with a RC delay or by driving the enable pin by the output voltage of one of the other step-down converters. If a voltage above 3 V is applied on pin VBACKUP while V_{CC} and VINDCDCx is below 3 V, there is no restriction in the power-up sequencing as VBACKUP is used to power the internal circuitry.

11 Layout

11.1 Layout Guidelines

As for all switching power supplies, the layout is an important step in the design. Proper function of the device demands careful attention to PCB layout. Take care in board layout to get the specified performance. If the layout is not carefully done, the regulators may show poor line, load regulation, or both, along with stability issues and EMI problems. It is critical to provide a low impedance ground path. Therefore, use wide and short traces for the main current paths. The input capacitors must be placed as close as possible to the IC pins as well as the inductor and output capacitor.

For the TPS65023-Q1 device, connect the PGND pins of the device to the thermal pad land of the PCB and connect the analog ground connections (AGND) to the PGND at the thermal pad. It is essential to provide a good thermal and electrical connection of all GND pins using multiple vias to the GND-plane. Keep the common path to the AGND pins, which returns the small signal components, and the high current of the output capacitors as short as possible to avoid ground noise. The VDCDCx line must be connected right to the output capacitor and routed away from noisy components and traces (for example, the L1, L2, and L3 traces).

11.2 Layout Example

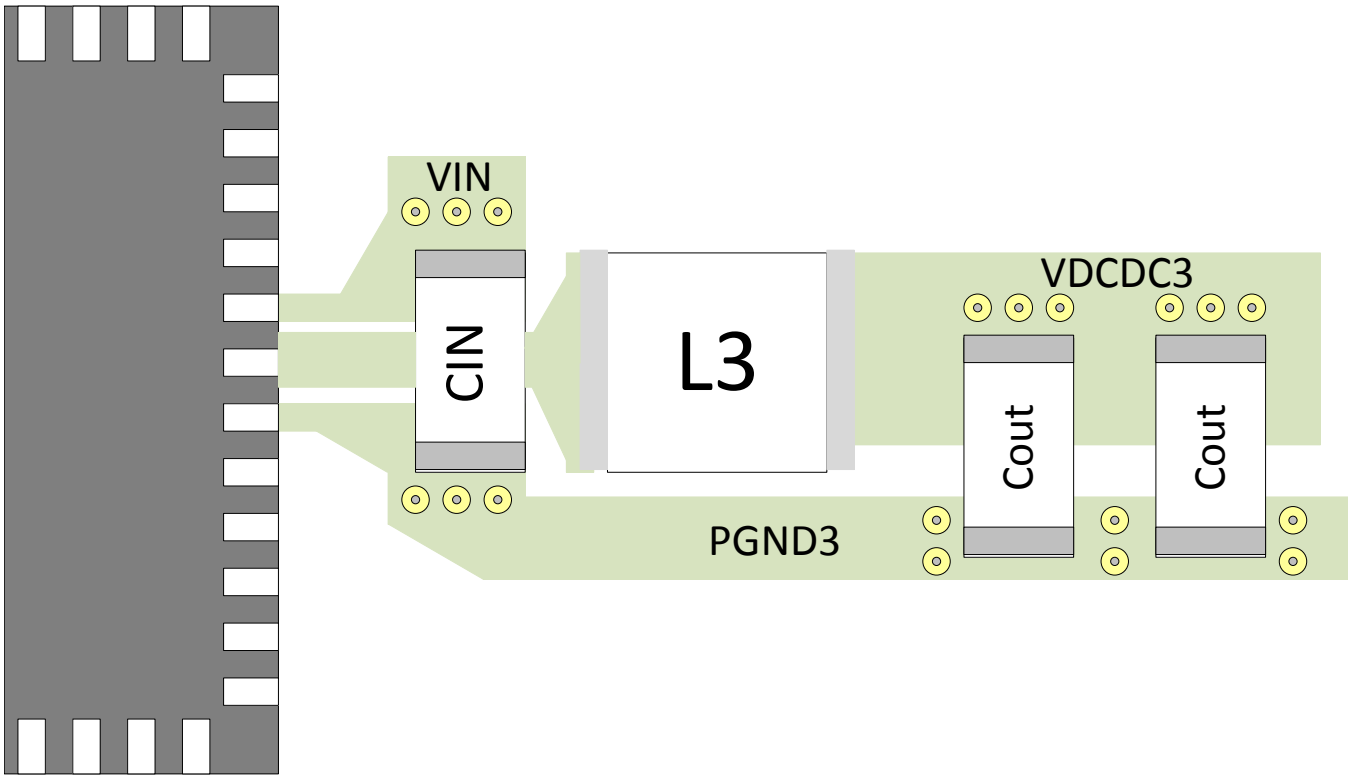

Figure 51. Layout Example of a DC-DC Converter

Copyright © 2009–2018, Texas Instruments Incorporated

12 Device and Documentation Support

12.1 Device Support

12.1.1 Third-Party Products Disclaimer

TI'S PUBLICATION OF INFORMATION REGARDING THIRD-PARTY PRODUCTS OR SERVICES DOES NOT CONSTITUTE AN ENDORSEMENT REGARDING THE SUITABILITY OF SUCH PRODUCTS OR SERVICES OR A WARRANTY, REPRESENTATION OR ENDORSEMENT OF SUCH PRODUCTS OR SERVICES, EITHER ALONE OR IN COMBINATION WITH ANY TI PRODUCT OR SERVICE.

12.2 Documentation Support

12.2.1 Related Documentation

For related documentation see the following:

- Texas Instruments, *Choosing an Appropriate Pull-up/Pull-down Resistor for Open Drain Outputs* application report
- Texas Instruments, *Power Supply Design for NXP i.MX 7 Using the TPS65023* application report
- Texas Instruments, *Power Supply Design for NXP i.MX 6 Using the TPS65023* application report
- Texas Instruments, *TPS65023EVM User's Guide*

12.3 Receiving Notification of Documentation Updates

To receive notification of documentation updates, navigate to the device product folder on ti.com. In the upper right corner, click on *Alert me* to register and receive a weekly digest of any product information that has changed. For change details, review the revision history included in any revised document.

12.4 Community Resources

The following links connect to TI community resources. Linked contents are provided "AS IS" by the respective contributors. They do not constitute TI specifications and do not necessarily reflect TI's views; see TI's Terms of Use.

TI E2E™ Online Community ***TI's Engineer-to-Engineer (E2E) Community.*** Created to foster collaboration among engineers. At e2e.ti.com, you can ask questions, share knowledge, explore ideas and help solve problems with fellow engineers.

Design Support ***TI's Design Support*** Quickly find helpful E2E forums along with design support tools and contact information for technical support.

12.5 Trademarks

DaVinci, E2E are trademarks of Texas Instruments.
All other trademarks are the property of their respective owners.

12.6 Electrostatic Discharge Caution

These devices have limited built-in ESD protection. The leads should be shorted together or the device placed in conductive foam during storage or handling to prevent electrostatic damage to the MOS gates.

12.7 Glossary

SLYZ022 — *TI Glossary*.

This glossary lists and explains terms, acronyms, and definitions.

13 Mechanical, Packaging, and Orderable Information

The following pages include mechanical, packaging, and orderable information. This information is the most current data available for the designated devices. This data is subject to change without notice and revision of this document. For browser-based versions of this data sheet, refer to the left-hand navigation.

PACKAGING INFORMATION

Orderable part number	Status (1)	Material type (2)	Package | Pins	Package qty | Carrier	RoHS (3)	Lead finish/ Ball material (4)	MSL rating/ Peak reflow (5)	Op temp (°C)	Part marking (6)
TPS65023QRHARQ1	Active	Production	VQFN (RHA) | 40	3000 | LARGE T&R	Yes	NIPDAU	Level-3-260C-168 HR	-	65023Q RHA
TPS65023QRHARQ1.B	Active	Production	VQFN (RHA) | 40	3000 | LARGE T&R	Yes	NIPDAU	Level-3-260C-168 HR	-40 to 125	65023Q RHA
TPS65023QRSBRQ1	Active	Production	WQFN (RSB) | 40	3000 | LARGE T&R	Yes	NIPDAU	Level-3-260C-168 HR	-40 to 125	TPS 65023Q
TPS65023QRSBRQ1.B	Active	Production	WQFN (RSB) | 40	3000 | LARGE T&R	Yes	NIPDAU	Level-3-260C-168 HR	-40 to 125	TPS 65023Q

(1) **Status:** For more details on status, see our product life cycle.

(2) **Material type:** When designated, preproduction parts are prototypes/experimental devices, and are not yet approved or released for full production. Testing and final process, including without limitation quality assurance, reliability performance testing, and/or process qualification, may not yet be complete, and this item is subject to further changes or possible discontinuation. If available for ordering, purchases will be subject to an additional waiver at checkout, and are intended for early internal evaluation purposes only. These items are sold without warranties of any kind.

(3) **RoHS values:** Yes, No, RoHS Exempt. See the TI RoHS Statement for additional information and value definition.

(4) **Lead finish/Ball material:** Parts may have multiple material finish options. Finish options are separated by a vertical ruled line. Lead finish/Ball material values may wrap to two lines if the finish value exceeds the maximum column width.

(5) **MSL rating/Peak reflow:** The moisture sensitivity level ratings and peak solder (reflow) temperatures. In the event that a part has multiple moisture sensitivity ratings, only the lowest level per JEDEC standards is shown. Refer to the shipping label for the actual reflow temperature that will be used to mount the part to the printed circuit board.

(6) **Part marking:** There may be an additional marking, which relates to the logo, the lot trace code information, or the environmental category of the part.

Multiple part markings will be inside parentheses. Only one part marking contained in parentheses and separated by a "~" will appear on a part. If a line is indented then it is a continuation of the previous line and the two combined represent the entire part marking for that device.

Important Information and Disclaimer: The information provided on this page represents TI's knowledge and belief as of the date that it is provided. TI bases its knowledge and belief on information provided by third parties, and makes no representation or warranty as to the accuracy of such information. Efforts are underway to better integrate information from third parties. TI has taken and continues to take reasonable steps to provide representative and accurate information but may not have conducted destructive testing or chemical analysis on incoming materials and chemicals. TI and TI suppliers consider certain information to be proprietary, and thus CAS numbers and other limited information may not be available for release.

In no event shall TI's liability arising out of such information exceed the total purchase price of the TI part(s) at issue in this document sold by TI to Customer on an annual basis.

OTHER QUALIFIED VERSIONS OF TPS65023-Q1 :

- Catalog : TPS65023

NOTE: Qualified Version Definitions:

- Catalog - TI's standard catalog product

TAPE AND REEL INFORMATION

REEL DIMENSIONS

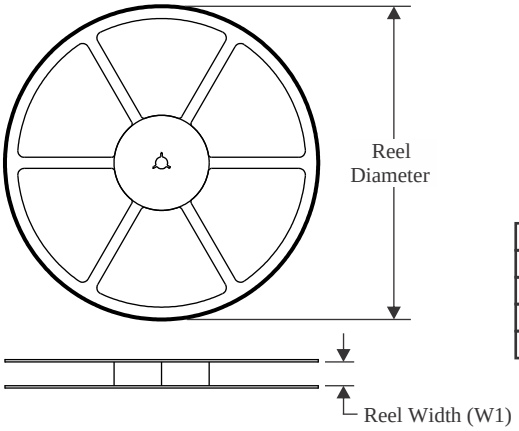

TAPE DIMENSIONS

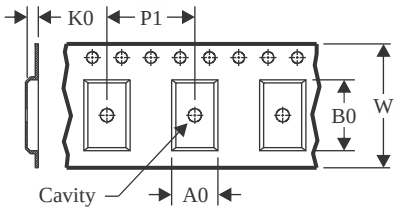

A0	Dimension designed to accommodate the component width
B0	Dimension designed to accommodate the component length
K0	Dimension designed to accommodate the component thickness
W	Overall width of the carrier tape
P1	Pitch between successive cavity centers

QUADRANT ASSIGNMENTS FOR PIN 1 ORIENTATION IN TAPE

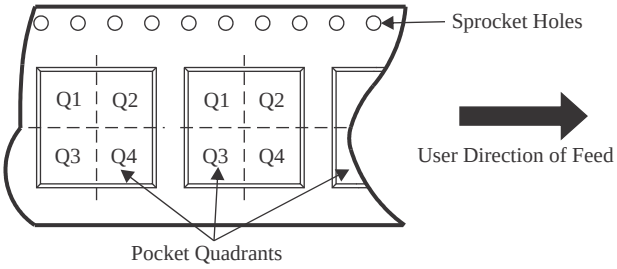

*All dimensions are nominal

Device	Package Type	Package Drawing	Pins	SPQ	Reel Diameter (mm)	Reel Width W1 (mm)	A0 (mm)	B0 (mm)	K0 (mm)	P1 (mm)	W (mm)	Pin1 Quadrant
TPS65023QRHARQ1	VQFN	RHA	40	3000	330.0	16.4	6.3	6.3	1.1	12.0	16.0	Q2
TPS65023QRSBRQ1	WQFN	RSB	40	3000	330.0	12.4	5.3	5.3	1.5	8.0	12.0	Q2

TAPE AND REEL BOX DIMENSIONS

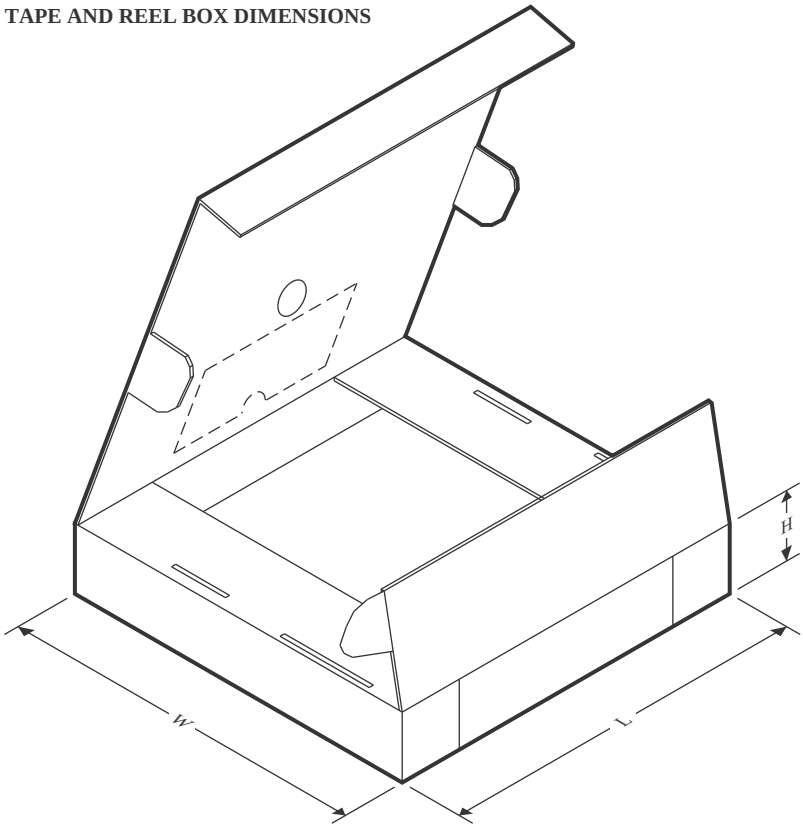

*All dimensions are nominal

Device	Package Type	Package Drawing	Pins	SPQ	Length (mm)	Width (mm)	Height (mm)
TPS65023QRHARQ1	VQFN	RHA	40	3000	353.0	353.0	32.0
TPS65023QRSBRQ1	WQFN	RSB	40	3000	353.0	353.0	32.0

GENERIC PACKAGE VIEW

RHA 40

VQFN - 1 mm max height

6 x 6, 0.5 mm pitch

PLASTIC QUAD FLATPACK - NO LEAD

This image is a representation of the package family, actual package may vary.
Refer to the product data sheet for package details.

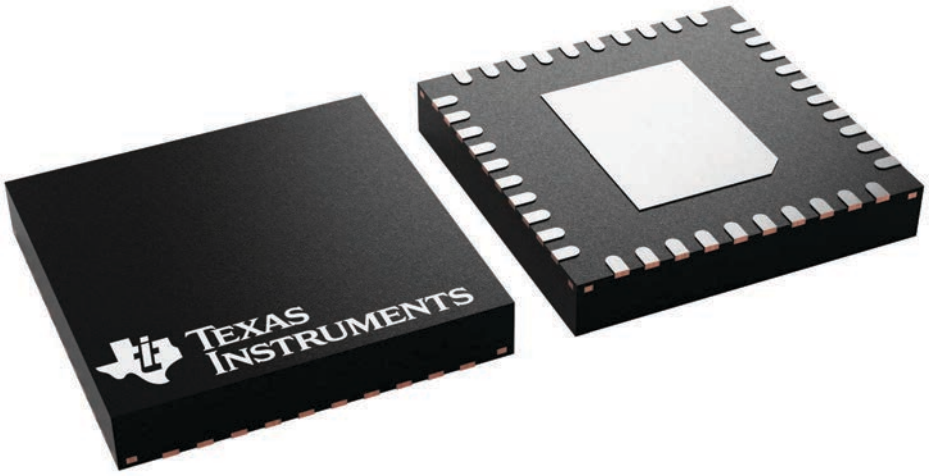

4225870/A

PACKAGE OUTLINE

RHA0040B

VQFN - 1 mm max height

PLASTIC QUAD FLATPACK - NO LEAD

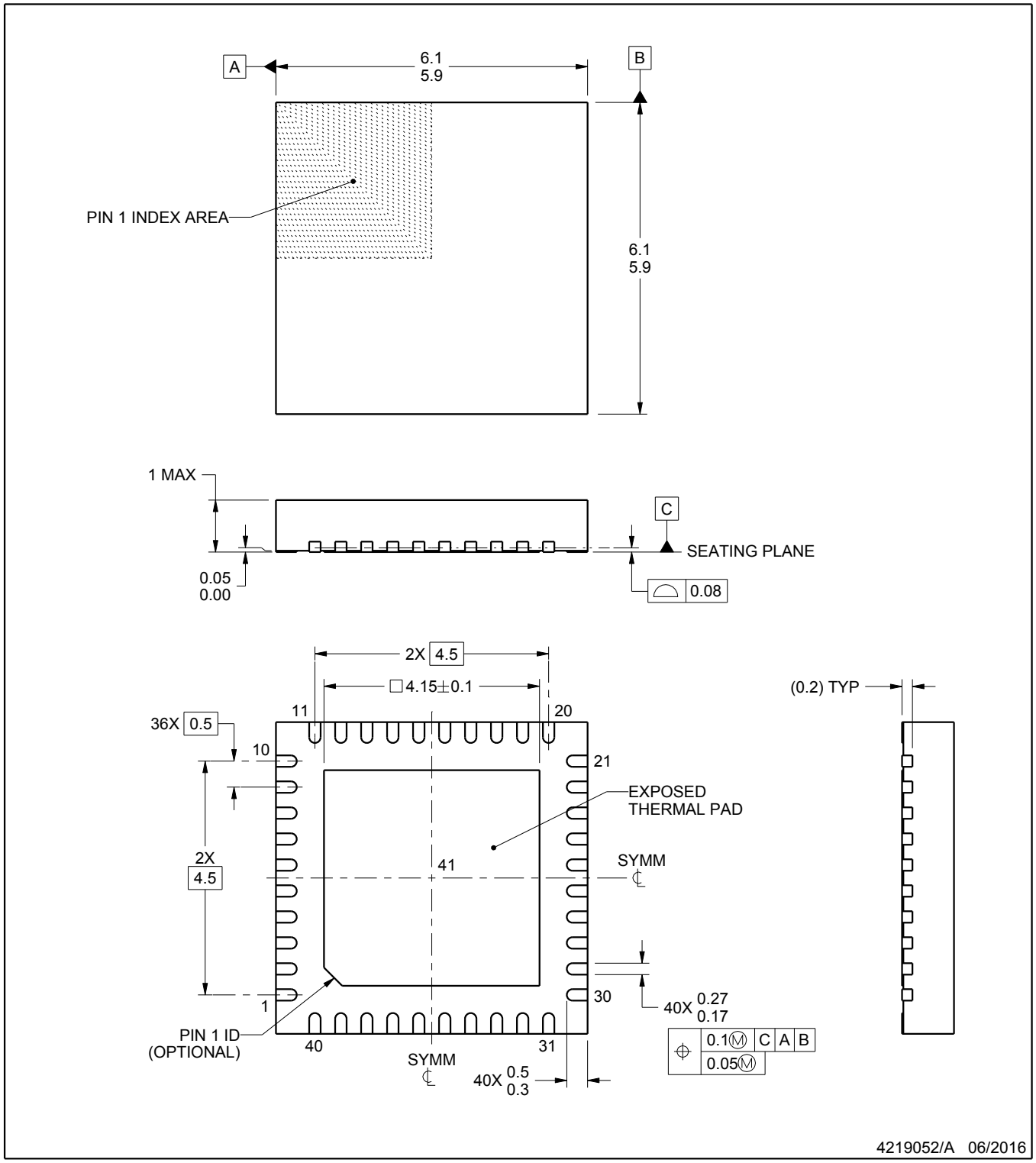

NOTES:

1. All linear dimensions are in millimeters. Any dimensions in parenthesis are for reference only. Dimensioning and tolerancing per ASME Y14.5M.
2. This drawing is subject to change without notice.
3. The package thermal pad must be soldered to the printed circuit board for thermal and mechanical performance.

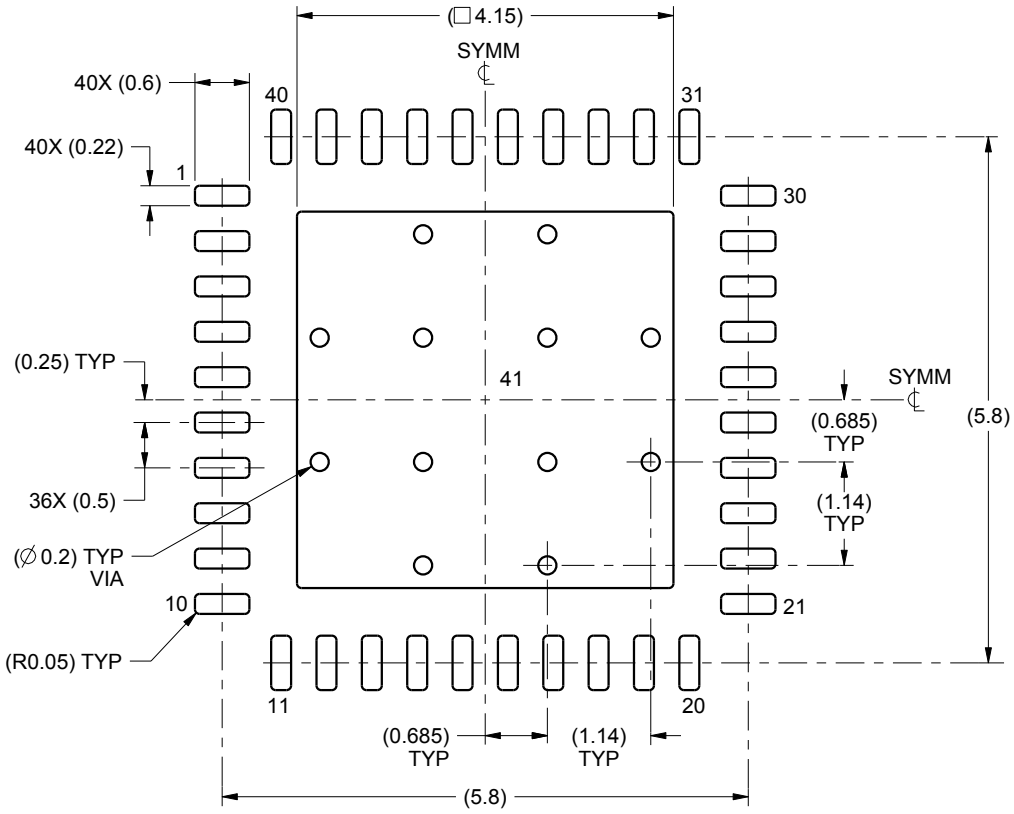

LAND PATTERN EXAMPLE
SCALE:12X

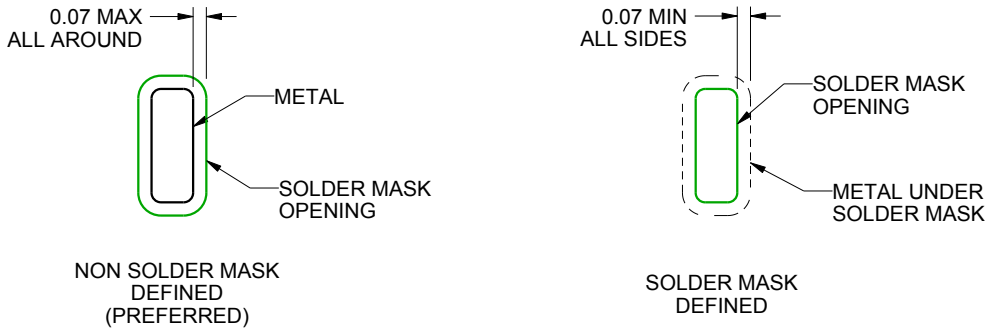

SOLDER MASK DETAILS

4219052/A 06/2016

NOTES: (continued)

4. This package is designed to be soldered to a thermal pad on the board. For more information, see Texas Instruments literature number SLUA271 (www.ti.com/lit/slua271).

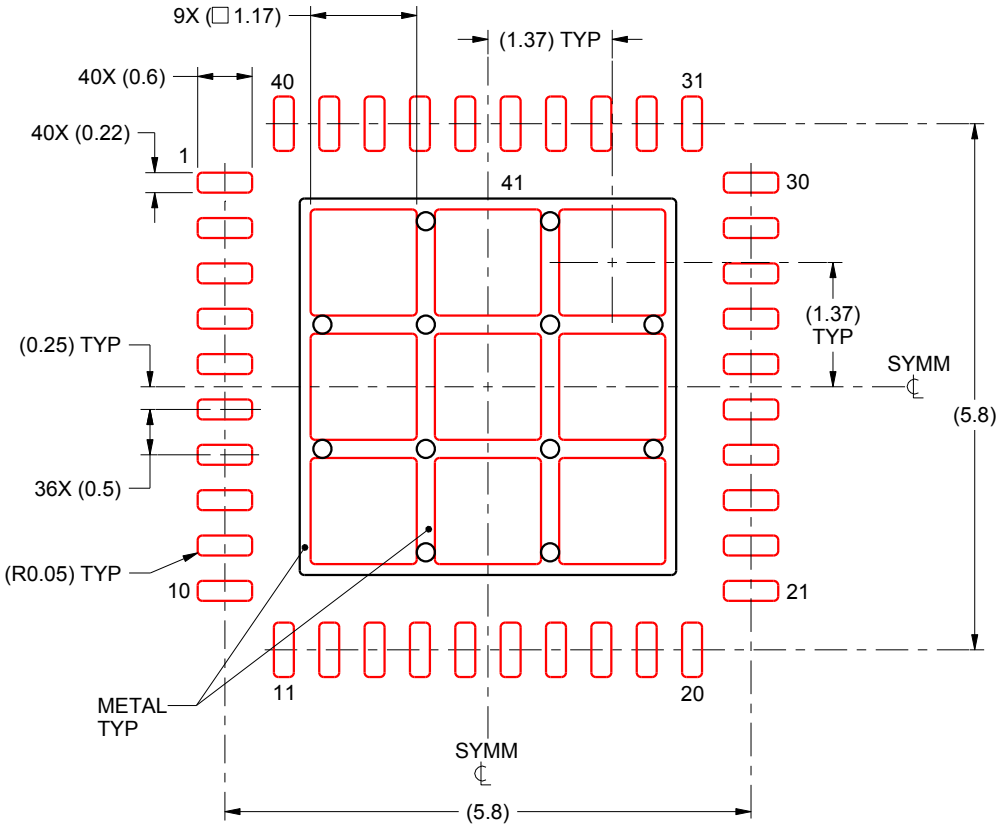

SOLDER PASTE EXAMPLE
BASED ON 0.125 mm THICK STENCIL

EXPOSED PAD 41:
72% PRINTED SOLDER COVERAGE BY AREA UNDER PACKAGE
SCALE:12X

4219052/A 06/2016

NOTES: (continued)

5. Laser cutting apertures with trapezoidal walls and rounded corners may offer better paste release. IPC-7525 may have alternate design recommendations.

RSB 40

WQFN - 0.8 mm max height

PLASTIC QUAD FLATPACK - NO LEAD

5 x 5 mm, 0.4 mm pitch

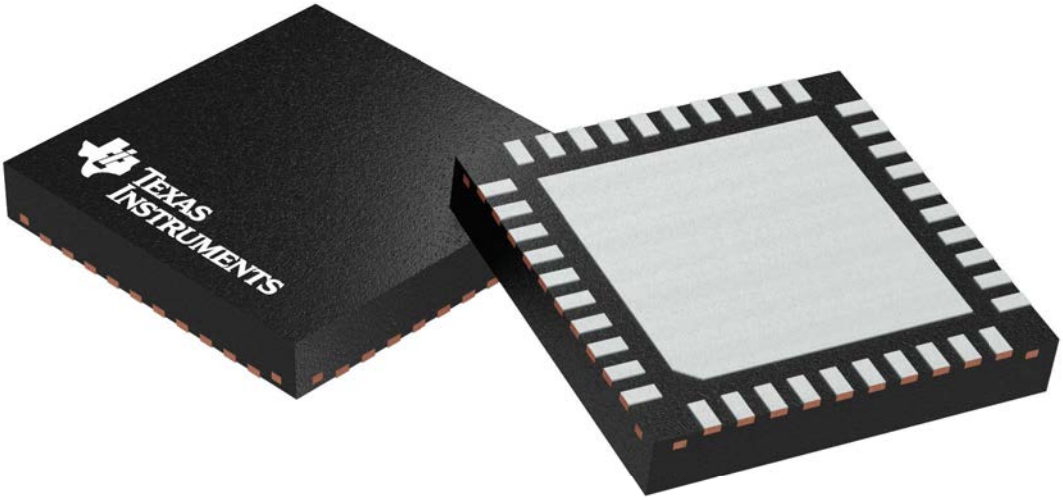

Images above are just a representation of the package family, actual package may vary.
Refer to the product data sheet for package details.

TEXAS INSTRUMENTS

RSB0040B

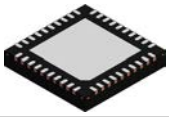

PACKAGE OUTLINE

WQFN - 0.8 mm max height

PLASTIC QUAD FLATPACK - NO LEAD

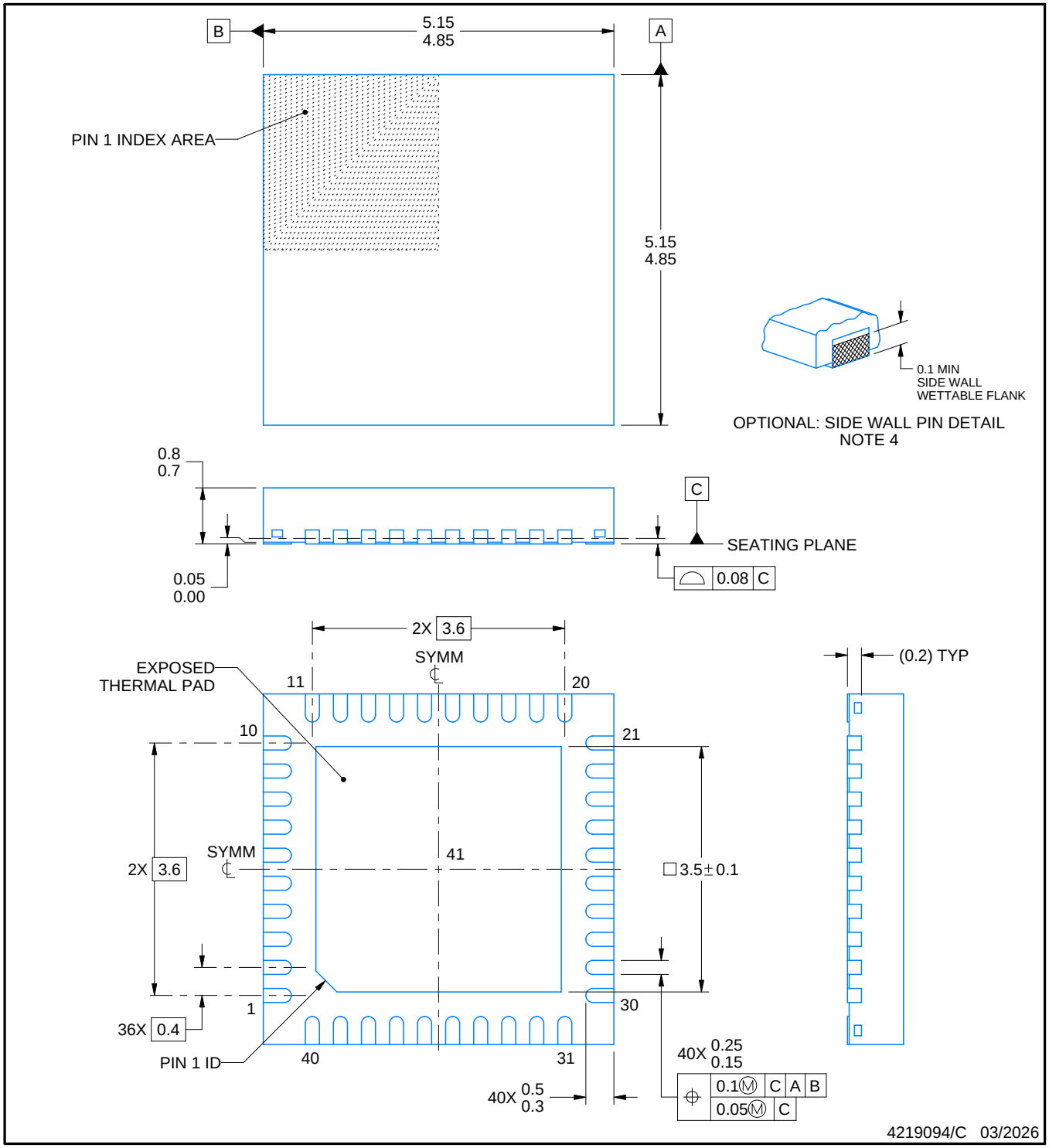

NOTES:

1. All linear dimensions are in millimeters. Any dimensions in parenthesis are for reference only. Dimensioning and tolerancing per ASME Y14.5M.
2. This drawing is subject to change without notice.
3. The package thermal pad must be soldered to the printed circuit board for thermal and mechanical performance.
4. Minimum 0.1 mm solder wetting on pin side wall. Available for wettable flank version only.

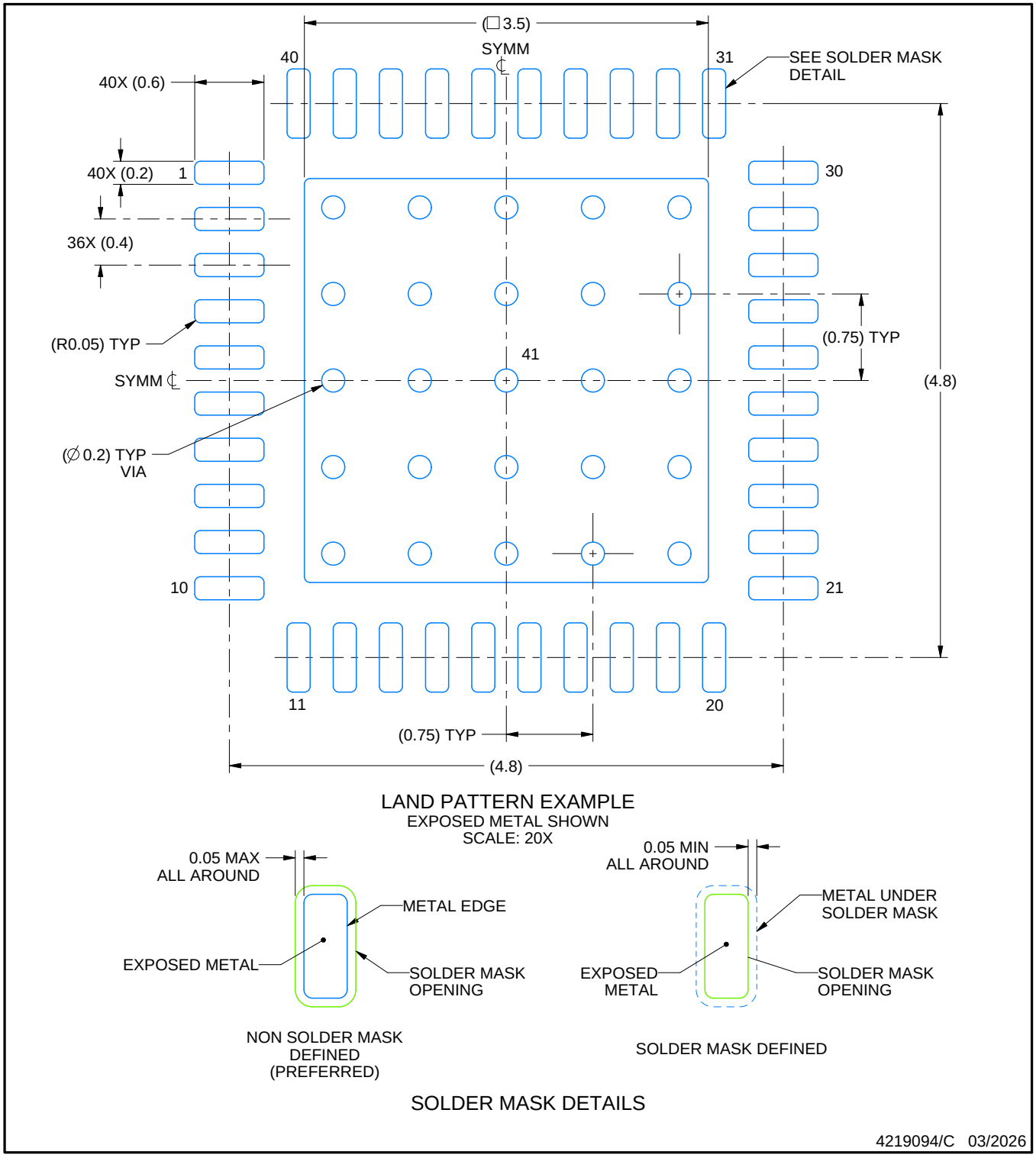

NOTES: (continued)

5. This package is designed to be soldered to a thermal pad on the board. For more information, see Texas Instruments literature number SLUA271 (www.ti.com/lit/slua271).
6. Vias are optional depending on application, refer to device data sheet. If any vias are implemented, refer to their locations shown on this view. It is recommended that vias under paste be filled, plugged or tented.

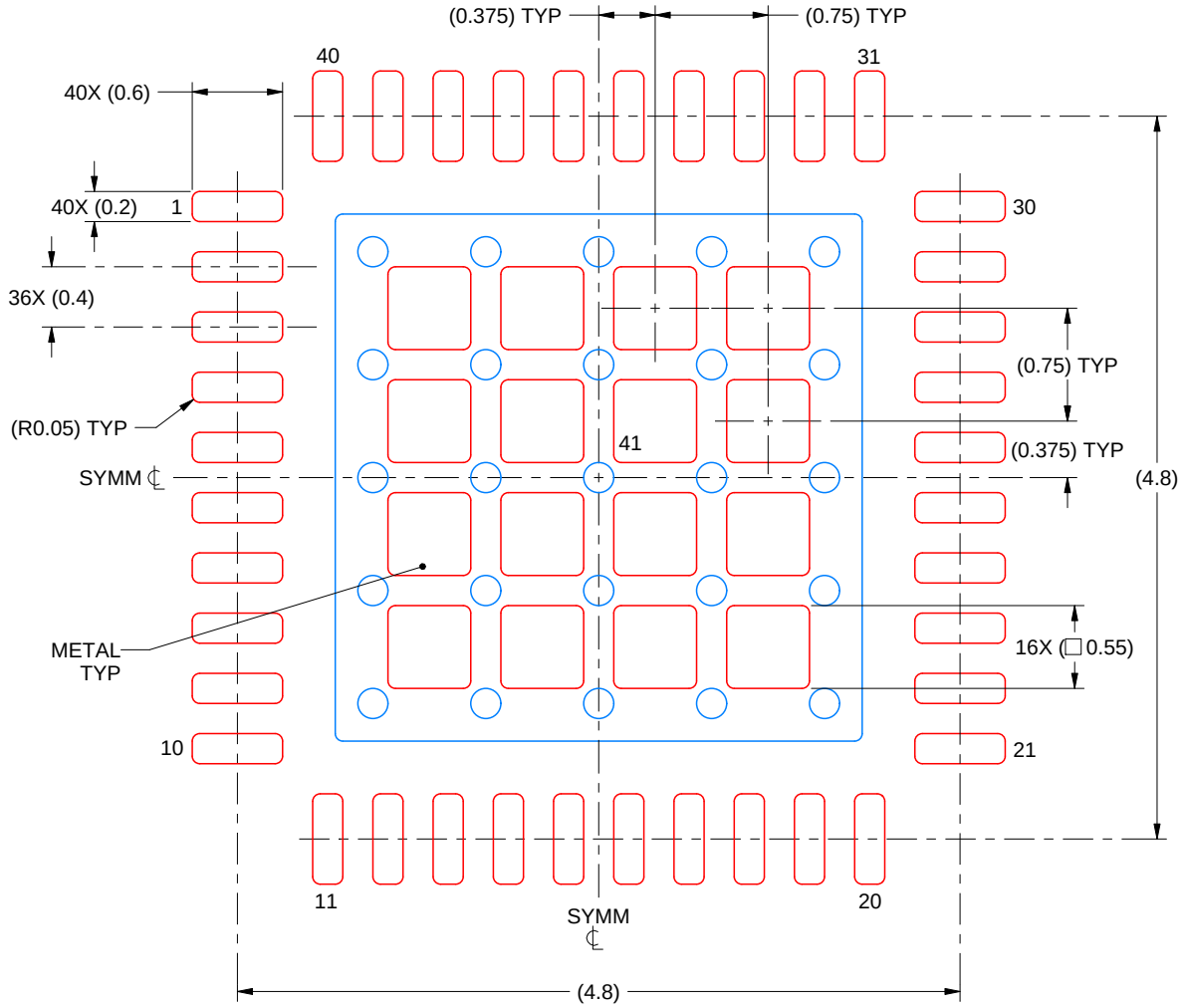

SOLDER PASTE EXAMPLE
BASED ON 0.125 MM THICK STENCIL
SCALE: 20X

EXPOSED PAD 41
40% PRINTED SOLDER COVERAGE BY AREA UNDER PACKAGE

4219094/C 03/2026

NOTES: (continued)

7. Laser cutting apertures with trapezoidal walls and rounded corners may offer better paste release. IPC-7525 may have alternate design recommendations.

IMPORTANT NOTICE AND DISCLAIMER

TI PROVIDES TECHNICAL AND RELIABILITY DATA (INCLUDING DATASHEETS), DESIGN RESOURCES (INCLUDING REFERENCE DESIGNS), APPLICATION OR OTHER DESIGN ADVICE, WEB TOOLS, SAFETY INFORMATION, AND OTHER RESOURCES “AS IS” AND WITH ALL FAULTS, AND DISCLAIMS ALL WARRANTIES, EXPRESS AND IMPLIED, INCLUDING WITHOUT LIMITATION ANY IMPLIED WARRANTIES OF MERCHANTABILITY, FITNESS FOR A PARTICULAR PURPOSE OR NON-INFRINGEMENT OF THIRD PARTY INTELLECTUAL PROPERTY RIGHTS.

These resources are intended for skilled developers designing with TI products. You are solely responsible for (1) selecting the appropriate TI products for your application, (2) designing, validating and testing your application, and (3) ensuring your application meets applicable standards, and any other safety, security, regulatory or other requirements.

These resources are subject to change without notice. TI grants you permission to use these resources only for development of an application that uses the TI products described in the resource. Other reproduction and display of these resources is prohibited. No license is granted to any other TI intellectual property right or to any third party intellectual property right. TI disclaims responsibility for, and you fully indemnify TI and its representatives against any claims, damages, costs, losses, and liabilities arising out of your use of these resources.

TI’s products are provided subject to TI’s Terms of Sale, TI’s General Quality Guidelines, or other applicable terms available either on ti.com or provided in conjunction with such TI products. TI’s provision of these resources does not expand or otherwise alter TI’s applicable warranties or warranty disclaimers for TI products. Unless TI explicitly designates a product as custom or customer-specified, TI products are standard, catalog, general purpose devices.

TI objects to and rejects any additional or different terms you may propose.

Copyright © 2026, Texas Instruments Incorporated

Last updated 10/2025