TPS7A3501 High PSRR, Low-Noise, 1-A Power Filter

1 Features

- Regulates Input-to-Output Voltage:
  - User-Programmable Input-to-Output Voltage Regulation Range: 200 mV to 500 mV
- Power-Supply Rejection Ratio:
  - 42 dB at 1 MHz
  - ≥ 32 dB (360 kHz to 3.9 MHz)
- Low-Noise Output:
  - 3.8 μV_{RMS} (10 Hz to 100 kHz)
- Output Current: Up to 1 A
- Output Voltage Range: 1.21 V to 4.5 V
- Excellent Load Transient Response
- Stable With Ceramic Capacitors as Low as 10 µF
- Current Limit and Thermal Shutdown for Fault Protection
- Available in a Low Thermal Resistance Package: 2-mm × 2-mm WSON-6
- Operating Temperature Range: –40°C to 125°C

2 Applications

- Post DC-DC Converter Ripple Filtering
- Base Stations and Telecom Infrastructure
- Professional Audio
- Communications
- Imaging
- Test and Measurement
- Passive Filter Replacement

3 Description

The TPS7A3501 is a positive voltage, low-noise (3.8-μV_{RMS}) power filter capable of sourcing a 1-A load suitable for quiet supply solutions. Power filters, such as the TPS7A3501, provide voltage regulation across the input and output terminals with high efficiency (low insertion loss), and power-supply rejection. The device is ideally suited as a noise filter for 3.3-V, 2.5-V, and 1.8-V supplies at up to 1 A.

The input-to-output voltage regulation is also user-programmable, from 200 mV to 500 mV, with a single external resistor. If no resistor is used, the TPS7A3501 provides 330 mV of input-to-output voltage regulation. The device is stable with 10-µF input and output ceramic capacitors and a 10-nF noise-reduction ceramic capacitor.

The TPS7A3501 is fully specified over a wide temperature of –40°C to 125°C. The device is offered in a low thermal resistance, 2-mm × 2-mm, WSON-6 package. Unlike passive filters, the TPS7A3501 provides thermal and current protection for itself and surrounding circuitry.

Device Information[1]

PART NUMBER	PACKAGE	BODY SIZE (NOM)
TPS7A3501	WSON (6)	2.00 mm × 2.00 mm

(1) For all available packages, see the orderable addendum at the end of the data sheet.

Typical Application Circuit

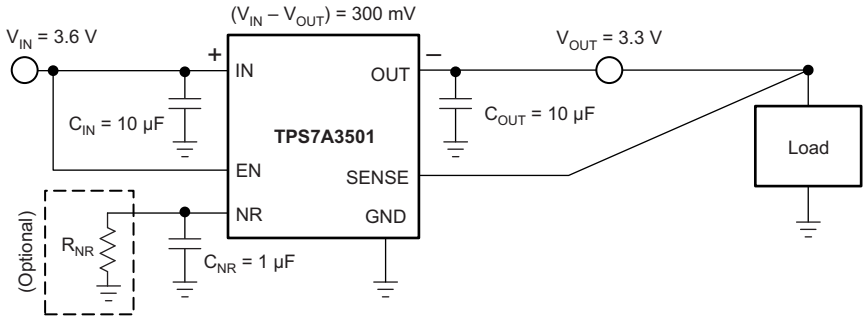

An IMPORTANT NOTICE at the end of this data sheet addresses availability, warranty, changes, use in safety-critical applications, intellectual property matters and other important disclaimers. PRODUCTION DATA.

Table of Contents

1 Features ... 1
2 Applications ... 1
3 Description ... 1
4 Revision History ... 2
5 Pin Configuration and Functions ... 4
6 Specifications ... 5
6.1 Absolute Maximum Ratings ... 5
6.2 ESD Ratings ... 5
6.3 Recommended Operating Conditions ... 5
6.4 Thermal Information ... 5
6.5 Electrical Characteristics ... 6
6.6 Typical Characteristics ... 7
7 Detailed Description ... 11
7.1 Overview ... 11
7.2 Functional Block Diagram ... 11
7.3 Feature Description ... 12
7.4 Device Functional Modes ... 13
8 Application and Implementation ... 15
8.1 Application Information ... 15
8.2 Typical Application ... 15
8.3 Do's and Don'ts ... 18
9 Power Supply Recommendations ... 18
10 Layout ... 19
10.1 Layout Guidelines ... 19
10.2 Layout Example ... 19
10.3 Power Dissipation ... 19
10.4 Estimating Junction Temperature ... 20
11 Device and Documentation Support ... 21
11.1 Device Support ... 21
11.2 Documentation Support ... 21
11.3 Trademarks ... 21
11.4 Electrostatic Discharge Caution ... 21
11.5 Glossary ... 21
12 Mechanical, Packaging, and Orderable Information ... 21

4 Revision History

Changes from Revision A (October 2013) to Revision B — **Page**

- Added *ESD Ratings* table, *Feature Description* section, *Device Functional Modes*, *Application and Implementation* section, *Power Supply Recommendations* section, *Layout* section, *Device and Documentation Support* section, and *Mechanical, Packaging, and Orderable Information* section ... 1
- Changed "free-air temperature" to "junction temperature" in *Absolute Maximum Ratings* condition statement ... 5
- Changed Figure 14 to Figure 18: collected new data ... 8

Changes from Original (July 2013) to Revision A — **Page**

- Changed document status to Production Data ... 1
- Changed document title ... 1
- Deleted second sub-bullet from first Features bullet ... 1
- Changed sub-bullets in *Power-Supply Rejection Ratio* and *Low-Noise Output* Features bullets ... 1
- Changed *Output Current*, *Transient Response*, *Ceramic Capacitors*, and *Package* Features bullets ... 1
- Deleted *Input Voltage Range* Features bullet ... 1
- Added *Output Voltage Range* Features bullet ... 1
- Added 4th to 7th Applications bullets ... 1
- Changed 1st and 3rd paragraphs of *Description* section ... 1
- Changed voltage regulation value in second *Description* paragraph ... 1
- Added changes to Typical Application Circuit ... 1
- Changed descriptions of IN, NR, OUT, and PowerPAD pins in Pin Functions table ... 4
- Added PowerPAD row to *Pin Functions* table ... 4
- Changed associated pins of *Voltage* parameter in Absolute Maximum Ratings table ... 5
- Changed T_J *Temperature range* parameter minimum specification in Absolute Maximum Ratings table ... 5
- Changed conditions of Electrical Characteristics table ... 6
- Changed V_{IN} and V_{OUT} parameter maximum specifications in *Electrical Characteristics* table ... 6
- Added $V_{UVLO(in)}$ parameter to *Electrical Characteristics* table ... 6
- Changed $V_{IN} - V_{OUT}$ *voltage range*, V_n, and T_{sd} parameters in *Electrical Characteristics* table ... 6

Copyright © 2013–2015, Texas Instruments Incorporated

- Changed I_{CL} and I_{EN} parameter specifications in *Electrical Characteristics* table 6
- Changed I_{GND} parameter typical specification in *Electrical Characteristics* table 6
- Changed I_{SHDN} test conditions and parameter specifications in *Electrical Characteristics* table 6
- Changed $V_{EN(HI)}$ parameter minimum specification in *Electrical Characteristics* table 6
- Changed *Typical Characteristics* section 7
- Added *Functional Block Diagram* 11
- Changed *Application Information* section 15
- Changed *Board Layout Recommendations* section 19

Copyright © 2013–2015, Texas Instruments Incorporated

5 Pin Configuration and Functions

DRV Package
6-Pin WSON
Top View

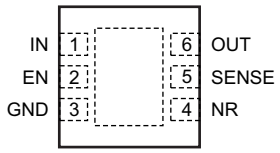

Pin Functions

PIN		I/O	DESCRIPTION
NAME	NO.		
EN	2	I	Enable pin. Driving EN high turns on the device (if driven low, EN turns off the device). EN must not be left floating and can be connected to IN if not used.
GND	3	—	Ground
IN	1	I	Input supply. A capacitor greater than or equal to 10 µF must be tied from this pin to ground to assure stability. This configuration is especially important when long input traces or high source impedances are encountered. TI recommends using X5R- or X7R-type dielectrics to minimize the temperature variations inherent to capacitors.
NR	4	O	Noise-reduction pin. When a capacitor is connected from this pin to GND, RMS noise can be reduced to very low levels. A capacitor greater than or equal to 10 nF must be tied from this pin to ground to assure stability. TI recommends connecting a 1-µF capacitor from NR to GND (as close to the device as possible) to maximize AC performance and minimize noise. TI recommends using X5R- or X7R-type dielectrics to minimize the temperature variations inherent to capacitors. In addition, when a resistor is connected from this pin to GND or IN, the device input-to-output voltage can be programmed; see *Feature Description* for details.
OUT	6	O	Regulator output. A capacitor greater than or equal to 10 µF must be tied from this pin to ground to assure stability. TI recommends using a X5R- or X7R-type dielectrics to minimize the temperature variations inherent to capacitors.
PowerPAD™	—	—	Connect the PowerPAD to the ground plane for improved thermal performance.
SENSE	5	I	Control-loop error amplifier input. This pin must be connected to OUT. TI recommends connecting SENSE at the point of load to maximize accuracy.

Copyright © 2013–2015, Texas Instruments Incorporated

6 Specifications

6.1 Absolute Maximum Ratings

over operating junction temperature range (unless otherwise noted).(1)

		MIN	MAX	UNIT
Voltage	IN, NR, EN	–0.3	7	V
	OUT, SENSE	–0.3	V_{IN} + 0.3(2)	
Current	OUT	Internally limited		
Temperature	Operating junction, T_J	–40	125	°C
	Storage, T_{stg}	–55	150	

(1) Stresses beyond those listed under *Absolute Maximum Ratings* may cause permanent damage to the device. These are stress ratings only, which do not imply functional operation of the device at these or any other conditions beyond those indicated under *Recommended Operating Conditions*. Exposure to absolute-maximum-rated conditions for extended periods may affect device reliability.
(2) Absolute maximum rating is V_{IN} + 0.3 V or + 7 V, whichever is smaller.

6.2 ESD Ratings

		VALUE	UNIT
$V_{(ESD)}$ Electrostatic discharge	Human body model (HBM), per ANSI/ESDA/JEDEC JS-001, all pins(1)	±1000	V
	Charged device model (CDM), per JEDEC specification JESD22-C101, all pins(2)	±250	

(1) JEDEC document JEP155 states that 500-V HBM allows safe manufacturing with a standard ESD control process.
(2) JEDEC document JEP157 states that 250-V CDM allows safe manufacturing with a standard ESD control process.

6.3 Recommended Operating Conditions

over operating junction temperature range (unless otherwise noted).

		MIN	NOM	MAX	UNIT
V_{IN}	Input voltage	1.71		5	V
I_{OUT}	Output current	0		1	A
T_J	Operating junction temperature	–40		125	°C

6.4 Thermal Information

THERMAL METRIC(1)		DRV (WSON) 6 PINS	UNIT
$R_{\theta JA}$	Junction-to-ambient thermal resistance	66.9	°C/W
$R_{\theta JC(top)}$	Junction-to-case (top) thermal resistance	86.5	
$R_{\theta JB}$	Junction-to-board thermal resistance	36.4	
ψ_{JT}	Junction-to-top characterization parameter	1.8	
ψ_{JB}	Junction-to-board characterization parameter	36.6	
$R_{\theta JC(bot)}$	Junction-to-case (bottom) thermal resistance	7.3	

(1) For more information about traditional and new thermal metrics, see the *IC Package Thermal Metrics* application report, SPRA953.

Copyright © 2013–2015, Texas Instruments Incorporated

6.5 Electrical Characteristics

At T_J = –40°C to 125°C, V_{IN} = 3.6 V, R_{NR} = ∞ (not connected), I_{OUT} = 10 mA, V_{EN} = V_{IN}, and C_{IN} = C_{OUT} = 10 µF, unless otherwise noted.

PARAMETER		TEST CONDITIONS	MIN	TYP	MAX	UNIT
V_{IN}	Input voltage range		1.71		5	V
$V_{UVLO(in)}$	Input supply UVLO	V_{IN} increasing	1.5		1.7	V
		V_{IN} hysteresis		200		mV
V_{OUT}	Output voltage range		1.21		4.5	V
	V_{IN} – V_{OUT} voltage range		200		500	mV
		$V_{OUT(nom)}$ = V_{IN} – 330 mV, I_{OUT} ≤ 1 A, 1.71 V ≤ V_{IN} ≤ 4.83 V	297	330	363	mV
		$R_{NR_INTERNAL}$ (1)	110	170	210	kΩ
		$I_{NR_INTERNAL}$ (2)	1.4	1.8	2.4	µA
$\Delta V_{OUT(\Delta IOUT)}$	Load regulation	10 mA ≤ I_{OUT} ≤ 1 A		10		µV/mA
I_{CL}	Output current limit	V_{OUT} = 0.85 × $V_{OUT(nom)}$	1.1			A
I_{GND}	GND pin current			2.25	5	mA
I_{EN}	EN pin input current	V_{EN} = V_{IN}		1	50	nA
$I_{SHUTDOWN}$	Shutdown current (I_{GND})	V_{EN} ≤ 0.3 V		0.01	3	µA
PSRR	Power-supply rejection ratio	f = 10 kHz, C_{NR} = 1 µF, I_{OUT} = 0.5 A		55		dB
		f = 100 kHz, C_{NR} = 1 µF, I_{OUT} = 0.5 A		40		
		f = 1 MHz, C_{NR} = 1 µF, I_{OUT} = 0.5 A		42		
V_n	Output noise voltage	BW = 10 Hz to 100 kHz, C_{NR} = 1 µF, I_{OUT} = 1 A		3.8		μV_{RMS}
		BW = 100 Hz to 100 kHz, C_{NR} = 1 µF, I_{OUT} = 1 A		3.62		
		BW = 10 Hz to 1 MHz, C_{NR} = 1 µF, I_{OUT} = 1 A		12.1		
$V_{EN(LO)}$	EN pin input low (disable)				0.4	V
$V_{EN(HI)}$	EN pin input high (enable)		1.1			V
T_{sd}	Thermal shutdown junction temperature	Shutdown, temperature increasing		165		°C
		Shutdown, temperature hysteresis		20		

(1) $R_{NR_INTERNAL}$ refers to the internal resistor used to set (V_{IN} – V_{OUT}) for the device when no external R_{NR} is used. See *Adjustable Voltage Drop* and *Typical Application Circuit* for details.

(2) $I_{NR_INTERNAL}$ refers to the internal current source used to set (V_{IN} – V_{OUT}) for the device when no external R_{NR} is used. See *Adjustable Voltage Drop* and *Typical Application Circuit* for details.

Copyright © 2013–2015, Texas Instruments Incorporated

6.6 Typical Characteristics

At V_{IN} = 3.6 V, R_{NR} = ∞ (not connected), I_{OUT} = 10 mA, V_{EN} = V_{IN}, C_{OUT} = 10 µF, C_{IN} = 10 µF, and C_{NR} = 0.1 µF, unless otherwise noted.

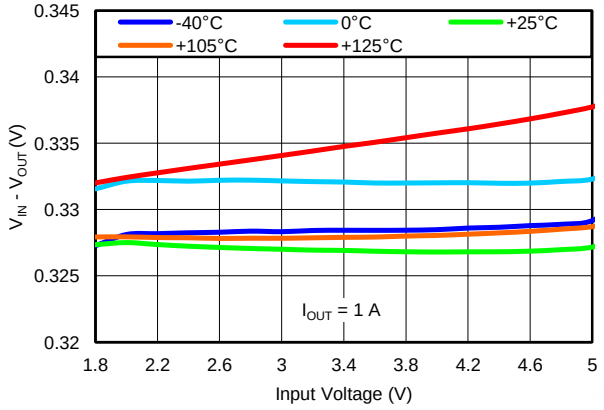

Figure 1. Line Regulation

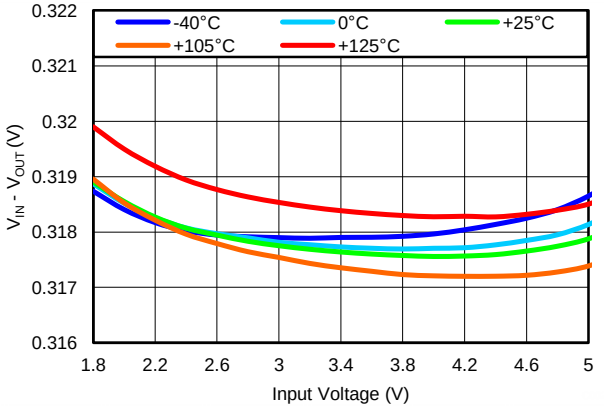

Figure 2. Line Regulation

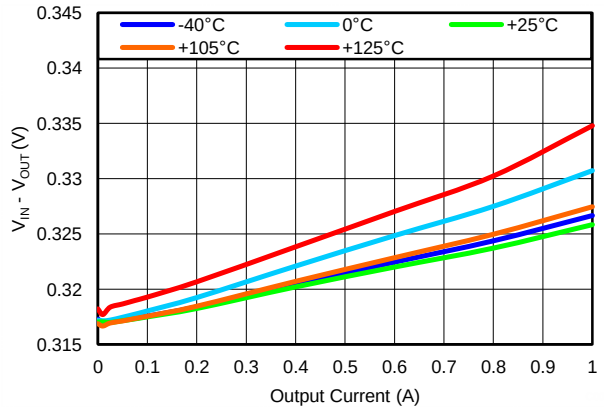

Figure 3. Load Regulation

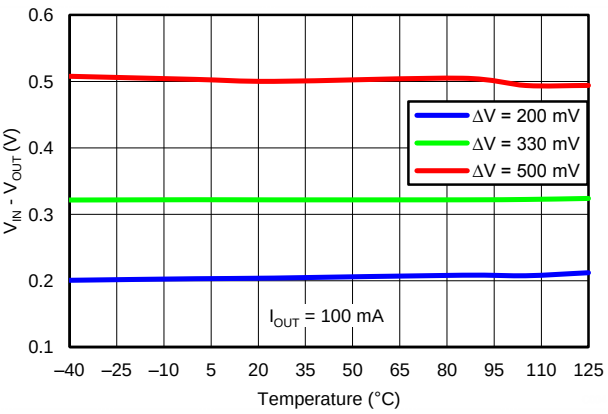

Figure 4. V_{DELTA} vs Temperature

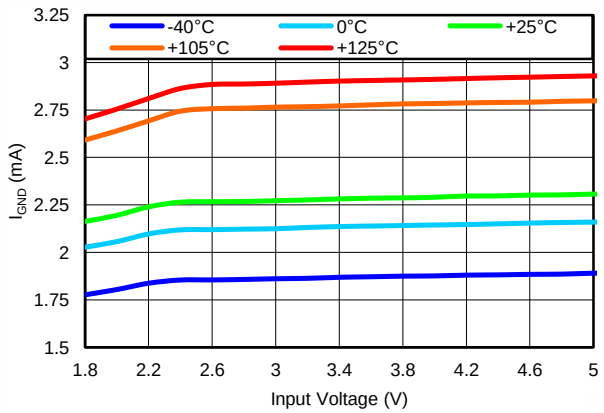

Figure 5. Ground Current vs Input Voltage

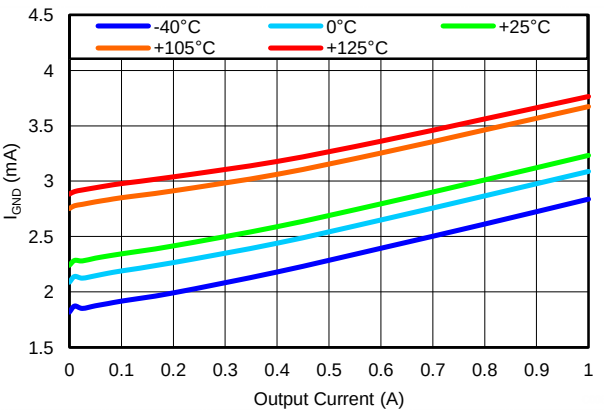

Figure 6. Ground Current vs Output Current

Typical Characteristics (continued)

At V_{IN} = 3.6 V, R_{NR} = ∞ (not connected), I_{OUT} = 10 mA, V_{EN} = V_{IN}, C_{OUT} = 10 µF, C_{IN} = 10 µF, and C_{NR} = 0.1 µF, unless otherwise noted.

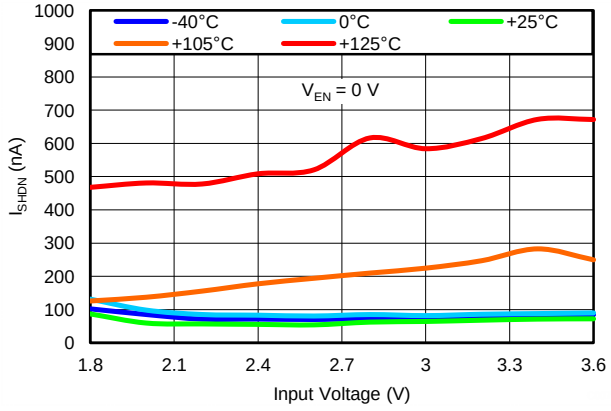

Figure 7. Shutdown Current vs Input Voltage

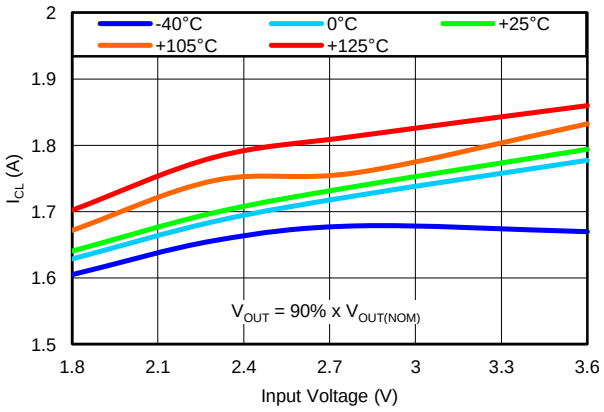

Figure 8. Current Limit vs Input Voltage

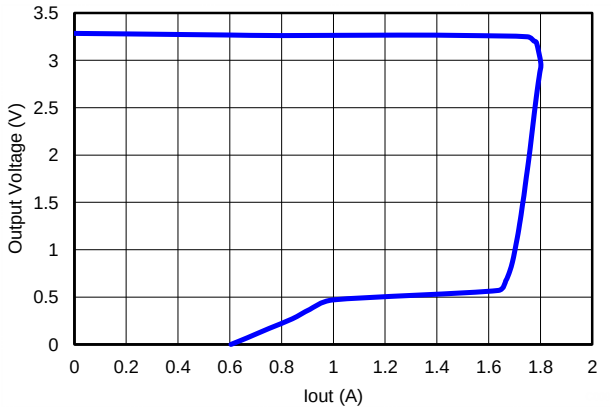

Figure 9. Foldback Current Limit

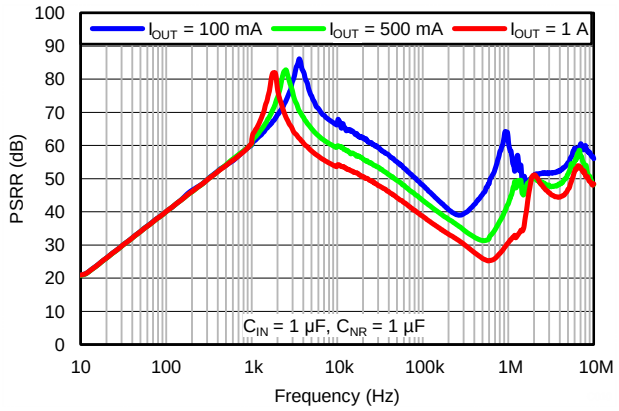

Figure 10. Power-Supply Rejection Ratio vs Frequency

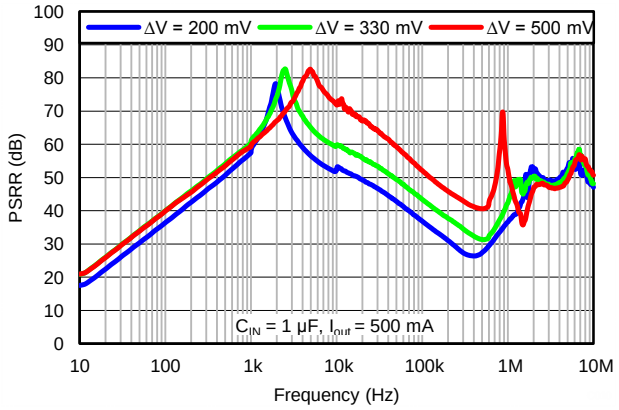

Figure 11. Power-Supply Rejection Ratio vs Frequency

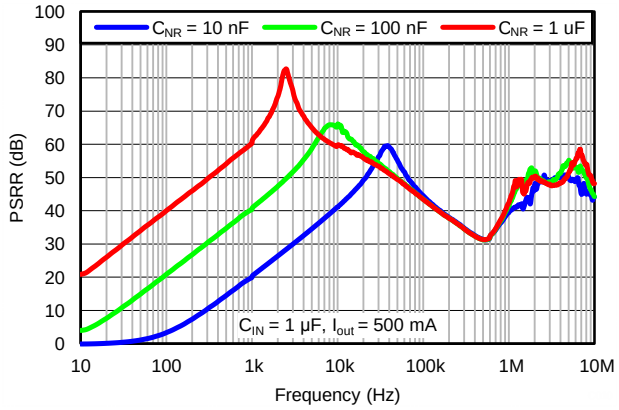

Figure 12. Power-Supply Rejection Ratio vs Frequency

Copyright © 2013–2015, Texas Instruments Incorporated

Typical Characteristics (continued)

At V_{IN} = 3.6 V, R_{NR} = ∞ (not connected), I_{OUT} = 10 mA, V_{EN} = V_{IN}, C_{OUT} = 10 µF, C_{IN} = 10 µF, and C_{NR} = 0.1 µF, unless otherwise noted.

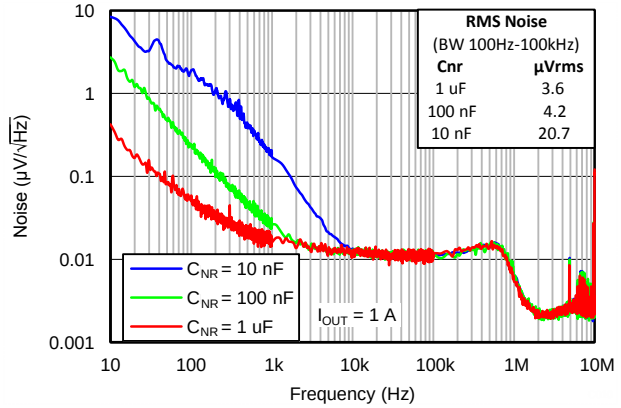

Figure 13. Spectral Noise Density vs Frequency

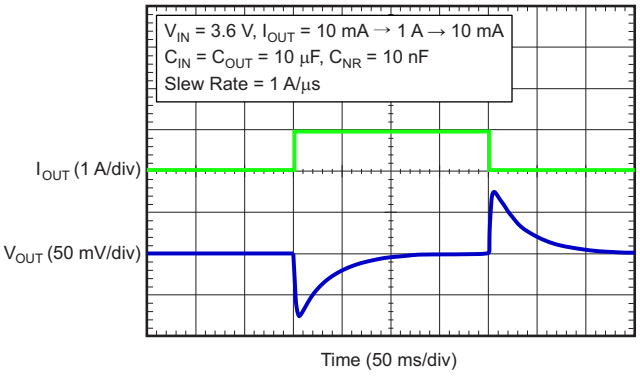

Figure 14. Load Transient Response

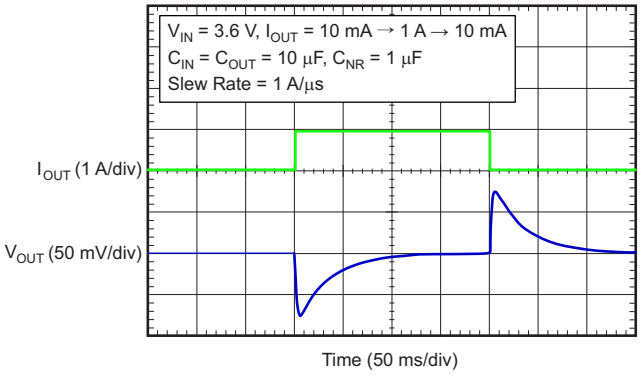

Figure 15. Load Transient Response

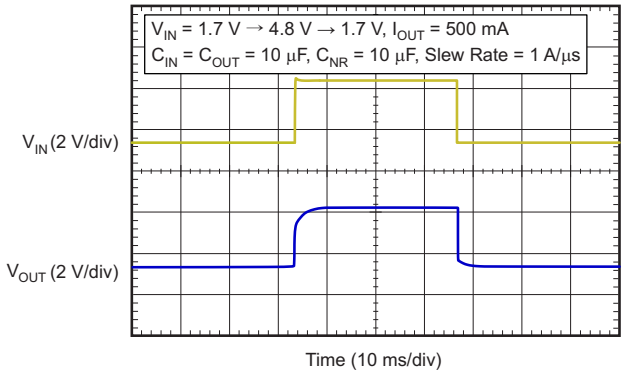

Figure 16. Line Transient Response

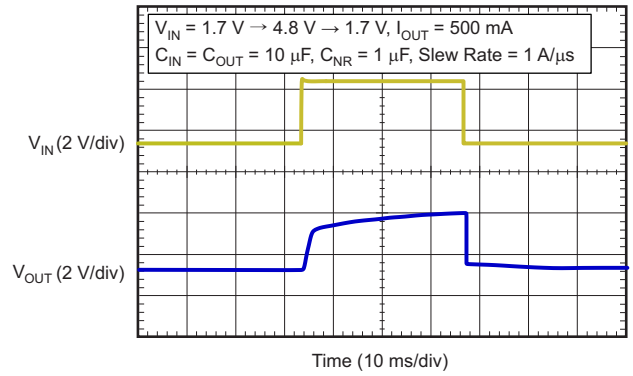

Figure 17. Line Transient Response

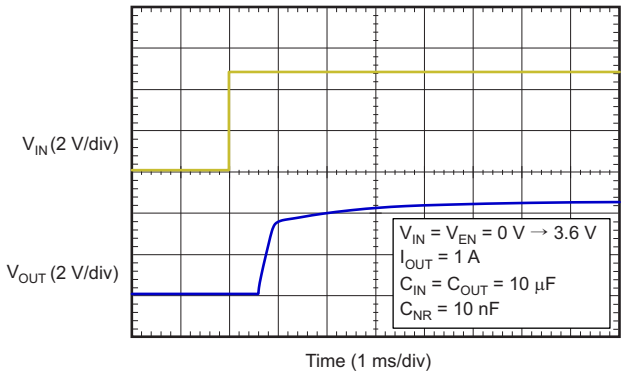

Figure 18. Start-up

Typical Characteristics (continued)

At V_{IN} = 3.6 V, R_{NR} = ∞ (not connected), I_{OUT} = 10 mA, V_{EN} = V_{IN}, C_{OUT} = 10 µF, C_{IN} = 10 µF, and C_{NR} = 0.1 µF, unless otherwise noted.

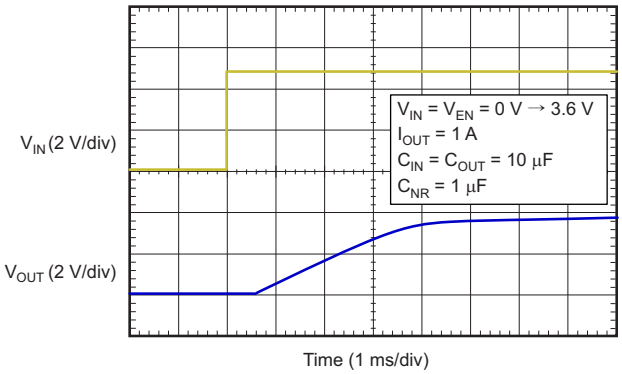

Figure 19. Start-up

Copyright © 2013–2015, Texas Instruments Incorporated

7 Detailed Description

7.1 Overview

The TPS7A3501 is a positive-voltage, low-noise (3.8-μV_{RMS}) power filter capable of sourcing a 1-A load. Power filters such as the TPS7A3501 provide voltage regulation across the input and output terminals with high accuracy and power-supply rejection ratio. The device is ideally suited as a noise filter for 4.5-V, 3.3-V, and 1.8-V supplies up to 1-A loads.

The input-to-output voltage drop is also user-programmable, from 200 mV up to 500 mV, with an external resistor. If no resistor is used, the TPS7A3501 provides 330 mV of input-to-output voltage regulation.

The TPS7A3501 is stable with 10-µF ceramic input and output capacitors and a 10-nF ceramic noise-reduction capacitor. The device is fully specified over a wide temperature range of –40°C to 125°C and is offered in a low thermal resistance, 2-mm × 2-mm, 6-pin WSON package.

7.2 Functional Block Diagram

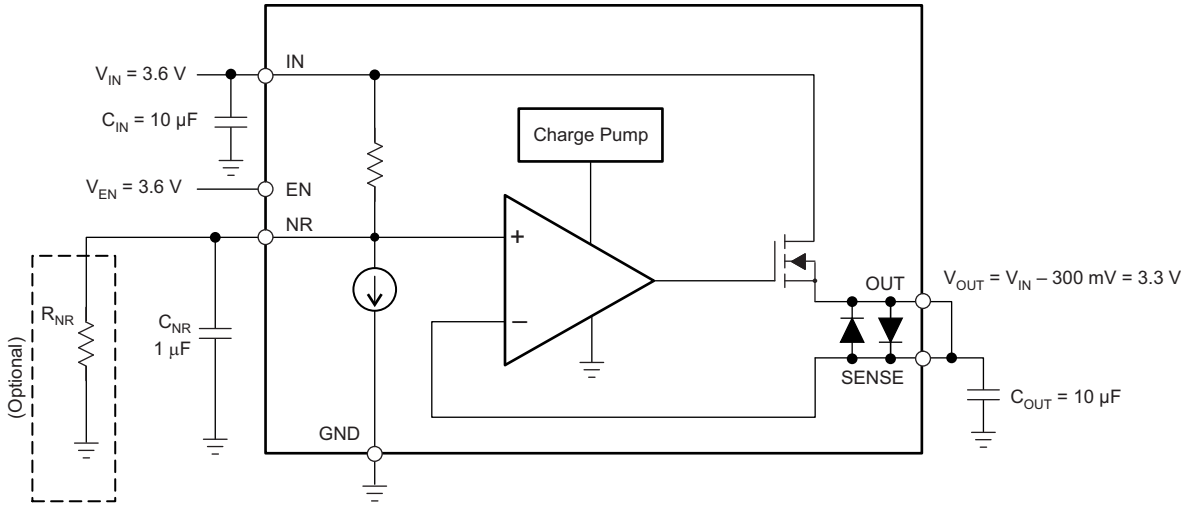

7.3 Feature Description

7.3.1 Power Filter Operation

A power filter is very similar to a low-dropout (LDO) regulator, except that instead of regulating output voltage relative to ground, the power filter regulates output voltage relative to V_{IN}. In other words, a power filter maintains a fixed ΔV from input to output. The device is optimized for high PSRR with a low V_{IN}-to-V_{OUT} delta, leading to a lower power dissipation than standard LDOs. Unlike a standard LDO, the bandgap and noise associated with the device are never gained up, resulting in low output noise regardless of V_{OUT}. The external noise capacitor on the power filter lets the user set the frequency at which the power filter starts to reject noise from the input. Table 1 summarizes the differences between a power filter and a high-performance LDO.

Table 1. Power Filter vs LDO Characteristics

PARAMETER	POWER FILTER	LDO
Voltage regulation	Regulates input-to-output delta. Voltage delta can be set from 0.2 V to 0.5 V. Relies on the upstream power rail to set the output voltage.	Regulates the output voltage referenced to ground. Outputs any output voltage within the output voltage range (limited by power dissipation).
PSRR	High PSRR at typical switching frequencies of DC-DC converters with lower power dissipation. Lower PSRR at low frequencies.	High PSRR over broad bandwidth. Effective rejection of low-frequency noise and switching noise from DC-DC.
Noise	Lower noise, 3.8 μV. Noise is not gained up when V_{OUT} increases.	Low noise (typically in the range of 5 μV_{RMS} to 20 μV_{RMS}). Noise is gained up when V_{OUT} increases.
Power dissipation	High PSRR can be achieved with only 330 mV from V_{IN} to V_{OUT}.	Typically requires 750 mV to 1 V of V_{IN}-to-V_{OUT} delta to achieve high PSRR.

7.3.2 Minimum Load

The device is stable without an output load.

7.3.3 Shutdown

The enable pin (EN) is active high and compatible with standard and low-voltage TTL-CMOS levels. The enable pin voltage level is independent of input voltage and can be biased to a higher value than V_{IN} as long as EN is within the maximum specification. When shutdown capability is not required, EN can be connected to IN.

7.3.4 Internal Current Limit

The device has an internal foldback current limit that helps protect the power filter during fault conditions. The current supplied by the device is gradually reduced when the output voltage decreases. When the output is shorted to GND, the LDO supplies a typical current of 550 mA. When in current limit, the output voltage is not regulated and $V_{OUT} = I_{OUT} \times R_{LOAD}$. For reliable operation, do not operate the device in current limit for extended periods of time.

Because of the nature of the foldback current limit circuitry, if OUT is forced below 0 V before EN goes high, the device may not start up. To ensure proper start-up in applications that have both a positive and negative voltage rail, extra care must be taken to ensure that OUT is greater than or equal to 0 V. There are several ways to help ensure proper start-up for dual-rail applications:

- Enable the device before the negative rail and disable the device after the negative rail.
- Delaying the EN voltage with respect to IN voltage allows the internal pulldown resistor to discharge any residual voltage at OUT.
- If a faster discharge rate is required, or if EN is tied directly to IN, an external resistor from OUT to GND can be used.

7.3.5 Reverse Current

The TPS7A3501 has a built-in body diode that conducts current when the voltage at OUT exceeds the voltage at IN. This current is not internally limited, so if reverse voltage conditions are anticipated, external limiting is required.

If there are potential situations where reverse current is expected, place a diode from OUT to IN, as shown in Figure 20.

Copyright © 2013–2015, Texas Instruments Incorporated

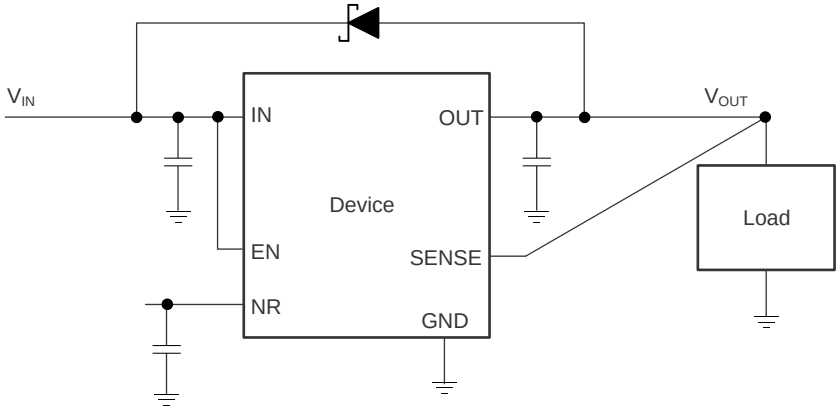

Figure 20. Reverse Current Protection Schematic

7.3.6 Undervoltage Lockout (UVLO)

The device uses an undervoltage lockout circuit to keep the output shut off until the internal circuitry is operating properly, ensuring a well-controlled start-up.

7.3.7 Thermal Protection

Thermal protection disables the output when the junction temperature rises to approximately 160°C, allowing the device to cool. When the junction temperature cools to approximately 140°C, the output circuitry is again enabled. Depending on power dissipation, thermal resistance, and ambient temperature, the thermal protection circuit may cycle on and off. This cycling limits device power dissipation, thus protecting the device from damage resulting from overheating.

Any activation of the thermal protection circuit indicates excessive power dissipation or inadequate thermal dissipation on the PCB. For reliable operation, limit junction temperature to 125°C (maximum). To estimate the margin of safety in a complete design, increase the ambient temperature until the thermal protection is triggered using worst-case loads and signal conditions. For good reliability, thermal protection should trigger at least 35°C above the maximum expected ambient condition of the application. This configuration produces a worst-case junction temperature of 125°C at the highest-expected ambient temperature and worst-case load.

The device internal protection circuitry is designed to protect against overload conditions. This circuitry is not intended to replace proper heat-sinking or thermal dissipation on the PCB. Continuously running the device into thermal shutdown degrades device reliability.

7.4 Device Functional Modes

Table 2 provides a quick comparison between the normal, dropout, and disabled modes of operation.

Table 2. Device Functional Mode Comparison

OPERATING MODE	PARAMETER			
	V_{IN}	EN	I_{OUT}	T_J
Normal	$1.71 \le V_{IN} \le 5$	$V_{EN} > V_{EN(HI)}$	$I_{OUT} < I_{CL}$	$T_J < T_{sd}$
Disabled	—	$V_{EN} < V_{EN(LO)}$	—	$T_J > T_{sd}$

7.4.1 Normal Operation

The device functions as a fixed voltage drop filter under the following conditions:

- The input voltage is within the specified operating range of 1.71 V to 5 V.
- The enable voltage has previously exceeded the enable rising threshold voltage and not yet decreased below the enable falling threshold.
- The output current is less than the current limit ($I_{OUT} < I_{CL}$).
- The device junction temperature is less than the thermal shutdown temperature ($T_J < T_{sd}$).

Copyright © 2013–2015, Texas Instruments Incorporated

7.4.2 Disabled

The device is disabled under the following conditions:

- The enable voltage is less than the enable falling threshold voltage or has not yet exceeded the enable rising threshold.
- The device junction temperature is greater than the thermal shutdown temperature ($T_J > T_{sd}$).

Copyright © 2013–2015, Texas Instruments Incorporated

8 Application and Implementation

NOTE

Information in the following applications sections is not part of the TI component specification, and TI does not warrant its accuracy or completeness. TI's customers are responsible for determining suitability of components for their purposes. Customers should validate and test their design implementation to confirm system functionality.

8.1 Application Information

The TPS7A3501 is well-suited for use as a filter for switching power supplies. The high PSRR of the device significantly reduces the ripple caused by the switching frequency as well as the subsequent harmonic frequencies. Figure 21 shows the basic circuit connections for the TPS7A3501. The IN pin should be connected to a well-regulated power source, typically a switching power supply.

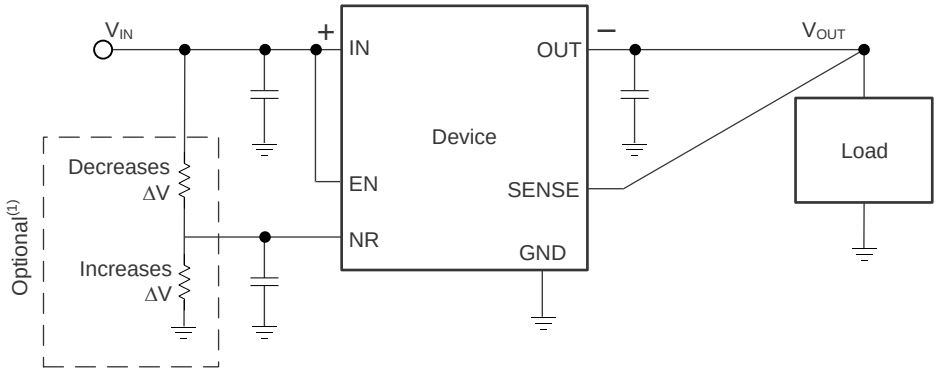

(1) Refer to Table 4.

Figure 21. Basic Circuit Connections

8.2 Typical Application

Figure 22 shows a schematic for filtering the output of a switching regulator using the TPS7A3501 to power an analog-to-digital converter (ADC).

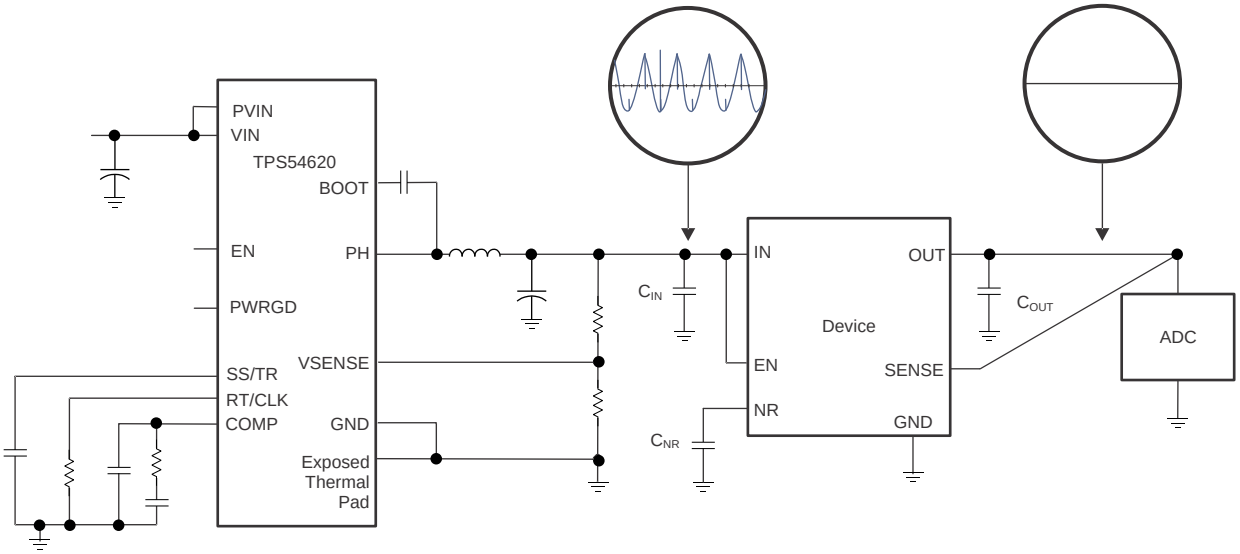

Figure 22. Typical Application Schematic

Typical Application (continued)

8.2.1 Design Requirements

Table 3 shows the design requirements.

Table 3. Design Requirements

PARAMETER	DESIGN REQUIREMENT
Input voltage	3.63 V
Output voltage	3.3 V
100-Hz to 100-kHz RMS noise	< 4 μV_{RMS}
Maximum output current	700 mA

8.2.2 Detailed Design Procedure

Select the input and output capacitors to be at least 10 µF for stability. Select a value for R_{NR} to give the desired voltage drop. For this example of a 330-mV voltage drop, no external resistor on the NR pin is required. Pick a value for C_{NR} greater than 10 nF, but large enough to provide the required noise performance. Refer to Table 5 for guidelines on selecting C_{NR} for a desired RMS noise target. For this example, to achieve an RMS noise (100 Hz to 100 kHz) less than 4 μV_{RMS}, the noise reduction capacitor must be at least 1 µF.

8.2.2.1 Adjustable Voltage Drop

In the TPS7A3501, the nominal voltage drop (ΔV) from IN to OUT is 330 mV. ΔV can be adjusted from this nominal setting with an external resistor. By connecting a resistor from the NR pin to IN, ΔV can be decreased to as low as 200 mV. By connecting a resistor from the NR pin to GND, ΔV can be increased to as high as 500 mV. The ability to change ΔV allows for the creation of standard voltage rails from higher voltage rails (for example, 2.5 V from 3 V, 1.5 V from 1.8 V, and so forth).

By connecting a resistor from the NR pin to IN, ΔV can be decreased to as low as 200 mV. Use Equation 1 to determine the size of the resistor required to set ΔV.

$$R = \Delta V / (0.33 - \Delta V) \times 150{,}000\ \Omega \quad (1)$$

By connecting a resistor from the NR pin to GND, ΔV can be increased to as high as 500 mV. Use Equation 2 to determine the size of the resistor required to set ΔV.

$$R = V_{OUT} / (\Delta V - 0.33) \times 150{,}000\ \Omega \quad (2)$$

Table 4 lists the standard external resistor values required for different input-to-output voltage drops.

Table 4. Common Input-to-Output Voltage Drops

ΔV (mV)	V_{OUT}	R TO V_{IN}	R TO GND
200	Any	240 kΩ	Do not install
330	Any	Do not install	Do not install
400	3.3 V	Do not install	6.8 MΩ
	2.5 V	Do not install	5.1 MΩ
	1.8 V	Do not install	3.9 MΩ
500	3.3 V	Do not install	3 MΩ
	2.5 V	Do not install	2.2 MΩ
	1.8 V	Do not install	1.6 MΩ

8.2.2.2 Input and Output Capacitor Requirements

Ceramic 10-µF or larger input and output capacitors are required to assure proper device operation. This capacitor counteracts reactive source impedances, improving supply transient response and decreasing input ripple. Higher-value capacitors may be used if large, fast slew rate load transients are anticipated, or if the device is located several inches away from the power source. To assure correct device operation, there should be no more than 100 µF of capacitance on the output of the device, including capacitance from downstream bypass capacitors.

Copyright © 2013–2015, Texas Instruments Incorporated

TI recommends X5R- and X7R-type ceramic capacitors because these types of capacitors have minimal variation in value and equivalent series resistance (ESR) overtemperature. Other types of capacitors, such as electrolytic or tantalum, can make the device unstable.

8.2.2.3 Output Noise

A 10-nF, or higher, noise-reduction capacitor is required to assure stability. Using a 1-µF ceramic capacitor minimizes output noise (see Figure 13). To assure correct device operation, a maximum capacitor of 2.2 µF can be connected to NR.

8.2.2.4 Power-Supply Rejection Ratio (PSRR)

Unlike standard LDOs, the TPS7A3501 PSRR is significantly affected by the noise-reduction capacitor. The larger the noise-reduction capacitor, the higher the PSRR is for frequencies below 10 kHz. Using a 1-µF ceramic capacitor maximizes PSRR.

One of the most compelling features of the TPS7A3501 is its high PSRR capabilities. The rejection ratio for this device is lower than standard LDOs at frequencies below 1 kHz but becomes higher at higher frequencies. For better low-frequency PSRR performance, a larger noise-reduction capacitor can be used. TI recommends connecting a 1-µF ceramic capacitor to NR to maximize PSRR (see Figure 12). A higher input-to-output voltage difference also increases the device rejection ratio. Although the device maximizes rejection ratio at 500 mV, high rejection ratio can still be achieved with as little as a 330-mV input-to-output voltage differential, unlike most standard LDOs.

8.2.2.5 Start-up

Because adding a noise-reduction capacitor leads to the formation of an RC filter, start-up time and the rate at which the device tracks V_{IN} are increased. Thus, consider the tradeoff between start-up time, noise, and PSRR when selecting a noise-reduction capacitor to use with the TPS7A3501. Use Equation 3 to calculate the typical start-up time.

$$T_startup = 250{,}000 \times C_{NR} \text{ (s)} \quad (3)$$

Table 5 shows the effect of various noise-reduction capacitors on RMS noise (with a 100-Hz to 100-kHz bandwidth), PSRR (at 1 kHz), and start-up time.

Table 5. Effect of Various Filter Capacitors

FILTER CAPACITOR	RMS NOISE (BW 100 Hz to 100 kHz)	PSRR (at 1 kHz)	START-UP TIME (EN to 90% of V_{OUT})
1 µF	3.62 µV	60 dB	250 ms
100 nF	4.21 µV	40 dB	25 ms
10 nF	20.70 µV	20 dB	3 ms

8.2.2.6 Transient Response

Increasing the size of the output capacitor reduces overshoot and undershoot magnitude during transients; however this size increase also slows the recovery from these transients.

Copyright © 2013–2015, Texas Instruments Incorporated

8.2.3 Application Curves

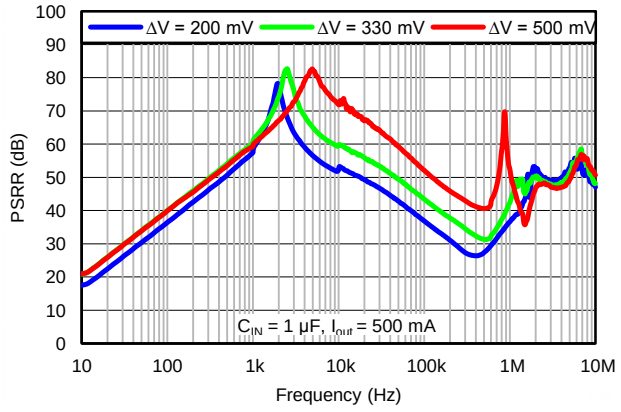

Figure 23. Power-Supply Rejection Ratio vs Frequency

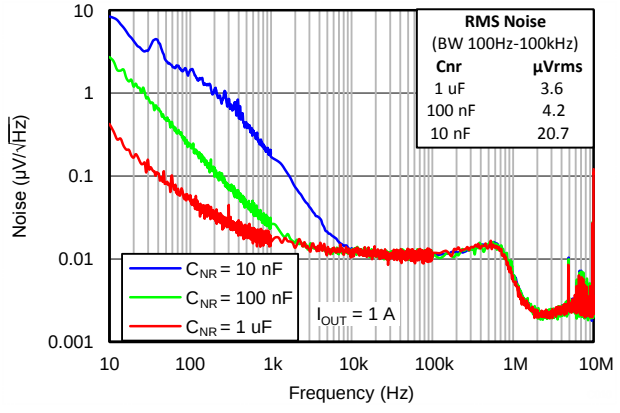

Figure 24. Spectral Noise Density vs Frequency

8.3 Do's and Don'ts

Place at least 10-µF ceramic capacitors on both the IN and OUT pins of the device, as close as possible to the pins of the regulator.

Do not place the input or output capacitor more than 10 mm away from the regulator.

Connect a 10-nF or greater, low-equivalent series resistance (ESR) capacitor across the NR pin and GND of the regulator. Larger capacitors provide lower noise performance.

Do not use a capacitor larger than 2.2 µF on the NR pin.

Do not exceed the absolute maximum ratings.

9 Power Supply Recommendations

For best performance, connect a low-output impedance power supply directly to the IN pin of the device. Inductive impedances between the input supply and the IN pin create significant voltage excursions at the IN pin.

Copyright © 2013–2015, Texas Instruments Incorporated

10 Layout

10.1 Layout Guidelines

Input and output capacitors should be placed as close to the device pins as possible. TI recommends that all components be on the same side of the printed-circuit-board (PCB) as the device. Using long, thin traces or vias to connect the device to external components is highly discouraged because this practice leads to parasitic inductances, which in turn degrade noise, PSRR, and transient response. For an example layout, refer to the *TPS7A3501EVM-547 Evaluation Module User Guide* (SLVU921).

10.2 Layout Example

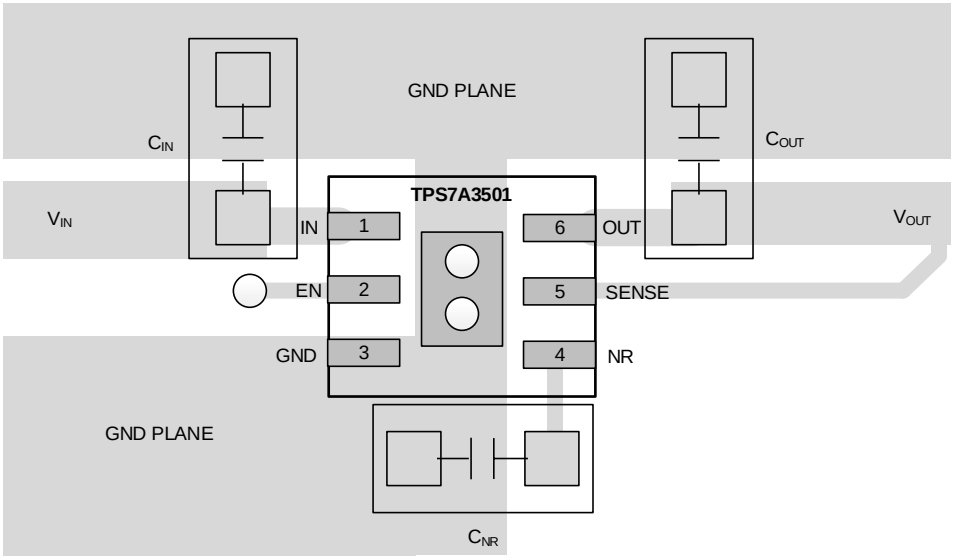

Figure 25. PCB Layout Example (DRV Package)

10.3 Power Dissipation

Knowing the device power dissipation and proper sizing of the thermal plane connected to the tab or pad is critical to avoiding thermal shutdown and ensuring reliable operation. Device power dissipation depends on input voltage and load conditions and can be calculated with Equation 4:

$$P_D = (V_{IN} – V_{OUT}) \times I_{OUT} \quad (4)$$

Power dissipation can be minimized and greater efficiency can be achieved by using the lowest available voltage drop option of 200 mV. However, keep in mind that higher voltage drops result in better PSRR performance.

On the WSON (DRV) package, the primary conduction path for heat is through the exposed power pad to the PCB. To ensure the device does not overheat, connect the pad to ground with an appropriate amount of copper PCB area through vias.

The maximum power dissipation determines the maximum allowable junction temperature (T_J) for the device. Power dissipation and junction temperature are most often related by the junction-to-ambient thermal resistance (θ_{JA}) of the combined PCB and device package and the temperature of the ambient air (T_A), according to Equation 5:

$$T_J = T_A + (\theta_{JA} \times P_D) \quad (5)$$

Unfortunately, this thermal resistance (θ_{JA}) is highly dependent on the heat-spreading capability of the particular PCB design, and therefore varies according to the total copper area, copper weight, and location of the planes. The θ_{JA} recorded in the table is determined by the JEDEC standard for PCB and copper-spreading area and is to be used only as a relative measure of package thermal performance. For a well-designed thermal layout, θ_{JA} is actually the sum of the package junction-to-case (bottom) thermal resistance (θ_{JCbot}) plus the thermal resistance contribution by the PCB copper.

Copyright © 2013–2015, Texas Instruments Incorporated

10.4 Estimating Junction Temperature

The JEDEC standard now recommends the use of psi (Ψ) thermal metrics to estimate the junction temperatures of the power filter on a typical PCB board application. These metrics are not strictly speaking thermal resistances, but rather offer practical and relative means of estimating junction temperatures. These psi metrics are determined to be significantly independent of copper-spreading area. The key thermal metrics (Ψ_{JT} and Ψ_{JB}) are given in the table and are used in accordance with Equation 6.

$$\Psi_{JT}: T_J = T_T + \Psi_{JT} \times P_D$$
$$\Psi_{JB}: T_J = T_B + \Psi_{JB} \times P_D$$

where:

- P_D is the power dissipated as explained in Equation 4,
- T_T is the temperature at the center-top of the device package, and
- T_B is the PCB surface temperature measured 1 mm from the device package and centered on the package edge. (6)

Copyright © 2013–2015, Texas Instruments Incorporated

11 Device and Documentation Support

11.1 Device Support

11.1.1 Development Support

11.1.1.1 Evaluation Modules

An evaluation module (EVM) is available to assist in the initial circuit performance evaluation using the TPS7A3501. The TPS7A3501EVM-547 evaluation module (and related user guide) can be requested at the Texas Instruments website through the product folder or purchased directly from the TI eStore.

11.1.1.2 Spice Models

Computer simulation of circuit performance using SPICE is often useful when analyzing the performance of analog circuits and systems. A SPICE model for the TPS7A3501 is available through the product folder under *Tools & Software*.

11.2 Documentation Support

11.2.1 Related Documentation

- *TPS7A3501EVM-547 User's Guide*, SLVU921.

11.3 Trademarks

PowerPAD is a trademark of Texas Instruments.
All other trademarks are the property of their respective owners.

11.4 Electrostatic Discharge Caution



This integrated circuit can be damaged by ESD. Texas Instruments recommends that all integrated circuits be handled with appropriate precautions. Failure to observe proper handling and installation procedures can cause damage.

ESD damage can range from subtle performance degradation to complete device failure. Precision integrated circuits may be more susceptible to damage because very small parametric changes could cause the device not to meet its published specifications.

11.5 Glossary

SLYZ022 — *TI Glossary*.

This glossary lists and explains terms, acronyms, and definitions.

12 Mechanical, Packaging, and Orderable Information

The following pages include mechanical, packaging, and orderable information. This information is the most current data available for the designated devices. This data is subject to change without notice and revision of this document. For browser-based versions of this data sheet, refer to the left-hand navigation.

Copyright © 2013–2015, Texas Instruments Incorporated

PACKAGING INFORMATION

Orderable part number	Status (1)	Material type (2)	Package | Pins	Package qty | Carrier	RoHS (3)	Lead finish/ Ball material (4)	MSL rating/ Peak reflow (5)	Op temp (°C)	Part marking (6)
TPS7A3501DRVR	Active	Production	WSON (DRV) | 6	3000 | LARGE T&R	Yes	NIPDAU	Level-1-260C-UNLIM	-40 to 125	SIQ
TPS7A3501DRVR.A	Active	Production	WSON (DRV) | 6	3000 | LARGE T&R	Yes	NIPDAU	Level-1-260C-UNLIM	-40 to 125	SIQ
TPS7A3501DRVRG4	Active	Production	WSON (DRV) | 6	3000 | LARGE T&R	Yes	NIPDAU	Level-1-260C-UNLIM	-40 to 125	SIQ
TPS7A3501DRVRG4.A	Active	Production	WSON (DRV) | 6	3000 | LARGE T&R	Yes	NIPDAU	Level-1-260C-UNLIM	-40 to 125	SIQ
TPS7A3501DRVT	Active	Production	WSON (DRV) | 6	250 | SMALL T&R	Yes	NIPDAU	Level-1-260C-UNLIM	-40 to 125	SIQ
TPS7A3501DRVT.A	Active	Production	WSON (DRV) | 6	250 | SMALL T&R	Yes	NIPDAU	Level-1-260C-UNLIM	-40 to 125	SIQ

(1) **Status:** For more details on status, see our product life cycle.

(2) **Material type:** When designated, preproduction parts are prototypes/experimental devices, and are not yet approved or released for full production. Testing and final process, including without limitation quality assurance, reliability performance testing, and/or process qualification, may not yet be complete, and this item is subject to further changes or possible discontinuation. If available for ordering, purchases will be subject to an additional waiver at checkout, and are intended for early internal evaluation purposes only. These items are sold without warranties of any kind.

(3) **RoHS values:** Yes, No, RoHS Exempt. See the TI RoHS Statement for additional information and value definition.

(4) **Lead finish/Ball material:** Parts may have multiple material finish options. Finish options are separated by a vertical ruled line. Lead finish/Ball material values may wrap to two lines if the finish value exceeds the maximum column width.

(5) **MSL rating/Peak reflow:** The moisture sensitivity level ratings and peak solder (reflow) temperatures. In the event that a part has multiple moisture sensitivity ratings, only the lowest level per JEDEC standards is shown. Refer to the shipping label for the actual reflow temperature that will be used to mount the part to the printed circuit board.

(6) **Part marking:** There may be an additional marking, which relates to the logo, the lot trace code information, or the environmental category of the part.

Multiple part markings will be inside parentheses. Only one part marking contained in parentheses and separated by a "~" will appear on a part. If a line is indented then it is a continuation of the previous line and the two combined represent the entire part marking for that device.

Important Information and Disclaimer: The information provided on this page represents TI's knowledge and belief as of the date that it is provided. TI bases its knowledge and belief on information provided by third parties, and makes no representation or warranty as to the accuracy of such information. Efforts are underway to better integrate information from third parties. TI has taken and continues to take reasonable steps to provide representative and accurate information but may not have conducted destructive testing or chemical analysis on incoming materials and chemicals. TI and TI suppliers consider certain information to be proprietary, and thus CAS numbers and other limited information may not be available for release.

In no event shall TI's liability arising out of such information exceed the total purchase price of the TI part(s) at issue in this document sold by TI to Customer on an annual basis.

TAPE AND REEL INFORMATION

REEL DIMENSIONS

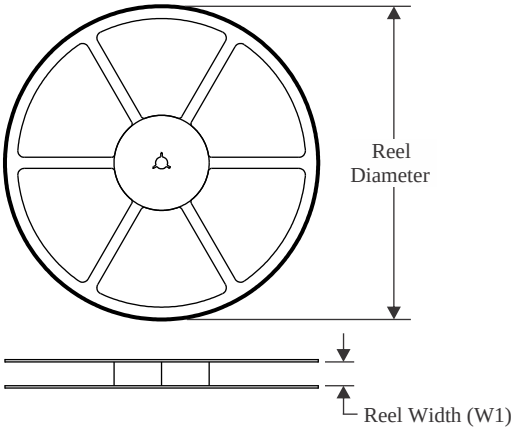

TAPE DIMENSIONS

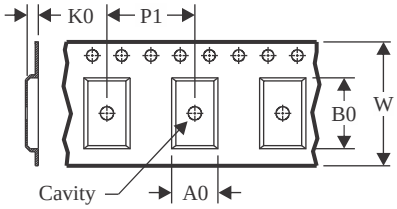

A0	Dimension designed to accommodate the component width
B0	Dimension designed to accommodate the component length
K0	Dimension designed to accommodate the component thickness
W	Overall width of the carrier tape
P1	Pitch between successive cavity centers

QUADRANT ASSIGNMENTS FOR PIN 1 ORIENTATION IN TAPE

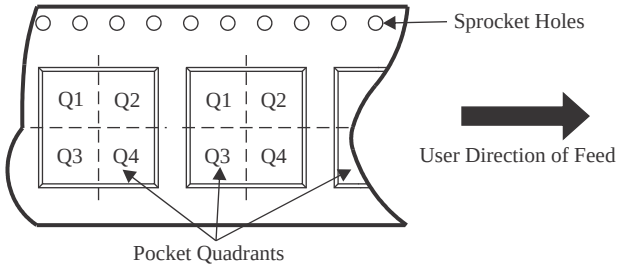

*All dimensions are nominal

Device	Package Type	Package Drawing	Pins	SPQ	Reel Diameter (mm)	Reel Width W1 (mm)	A0 (mm)	B0 (mm)	K0 (mm)	P1 (mm)	W (mm)	Pin1 Quadrant
TPS7A3501DRVR	WSON	DRV	6	3000	180.0	8.4	2.3	2.3	1.15	4.0	8.0	Q2
TPS7A3501DRVRG4	WSON	DRV	6	3000	180.0	8.4	2.3	2.3	1.15	4.0	8.0	Q2
TPS7A3501DRVT	WSON	DRV	6	250	180.0	8.4	2.3	2.3	1.15	4.0	8.0	Q2

TAPE AND REEL BOX DIMENSIONS

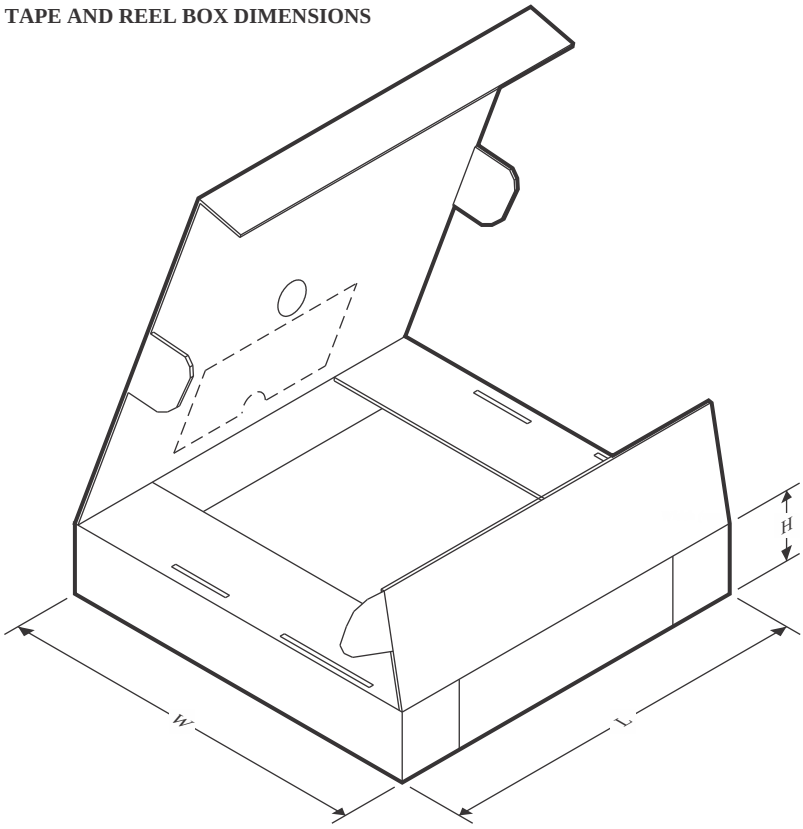

*All dimensions are nominal

Device	Package Type	Package Drawing	Pins	SPQ	Length (mm)	Width (mm)	Height (mm)
TPS7A3501DRVR	WSON	DRV	6	3000	182.0	182.0	20.0
TPS7A3501DRVRG4	WSON	DRV	6	3000	182.0	182.0	20.0
TPS7A3501DRVT	WSON	DRV	6	250	182.0	182.0	20.0

DRV 6 WSON - 0.8 mm max height

PLASTIC SMALL OUTLINE - NO LEAD

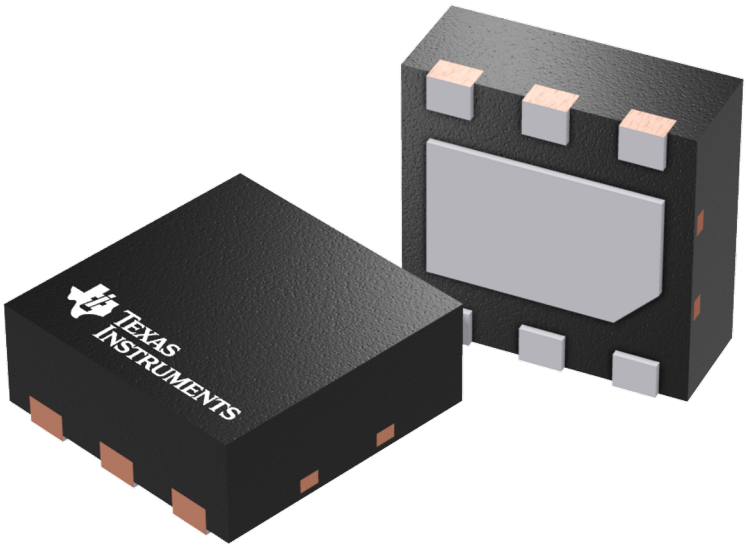

Images above are just a representation of the package family, actual package may vary.
Refer to the product data sheet for package details.

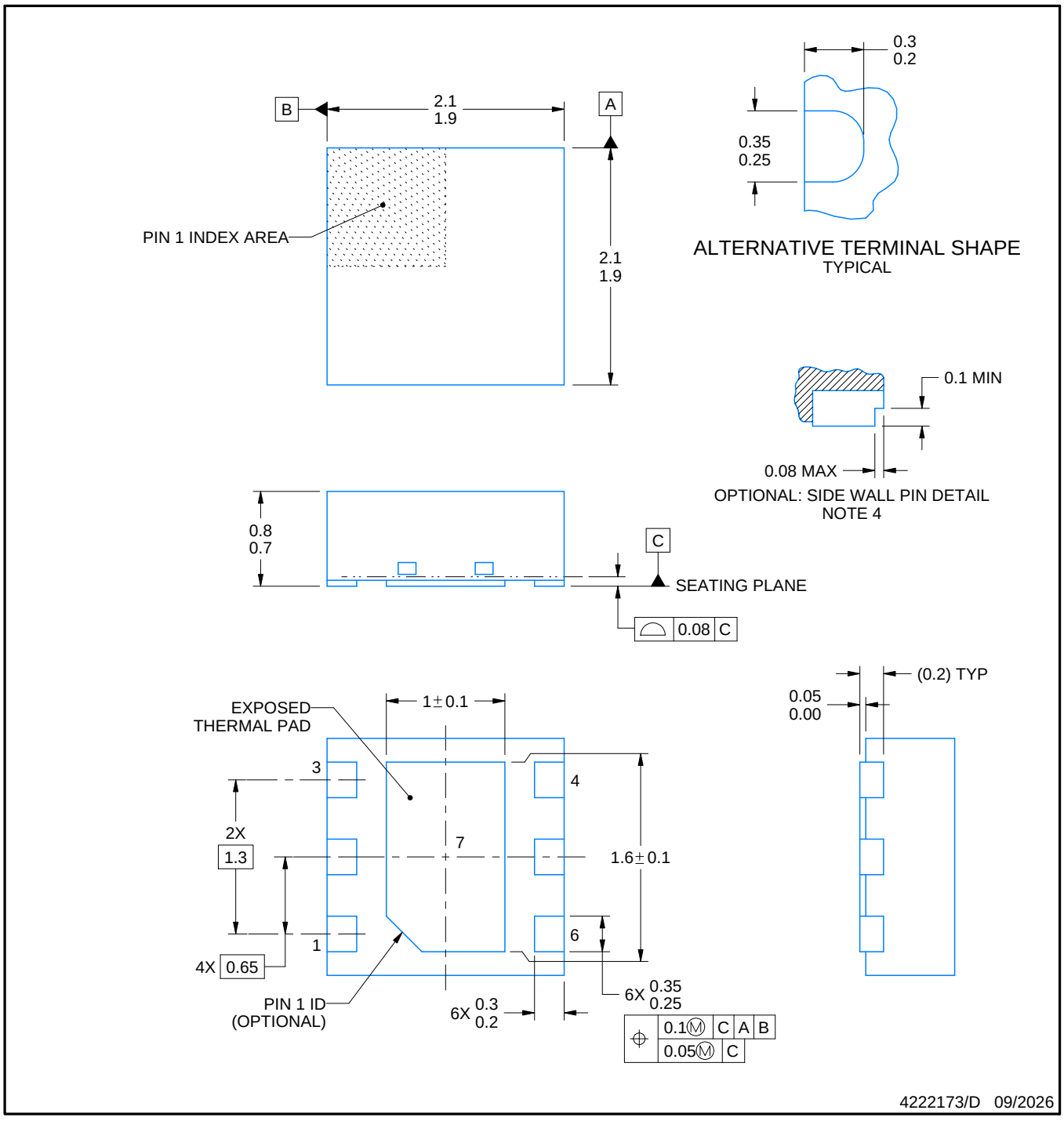

NOTES:

1. All linear dimensions are in millimeters. Any dimensions in parenthesis are for reference only. Dimensioning and tolerancing per ASME Y14.5M.
2. This drawing is subject to change without notice.
3. The package thermal pad must be soldered to the printed circuit board for thermal and mechanical performance.
4. Minimum 0.1 mm solder wetting on pin side wall. Available for wettable flank version only.

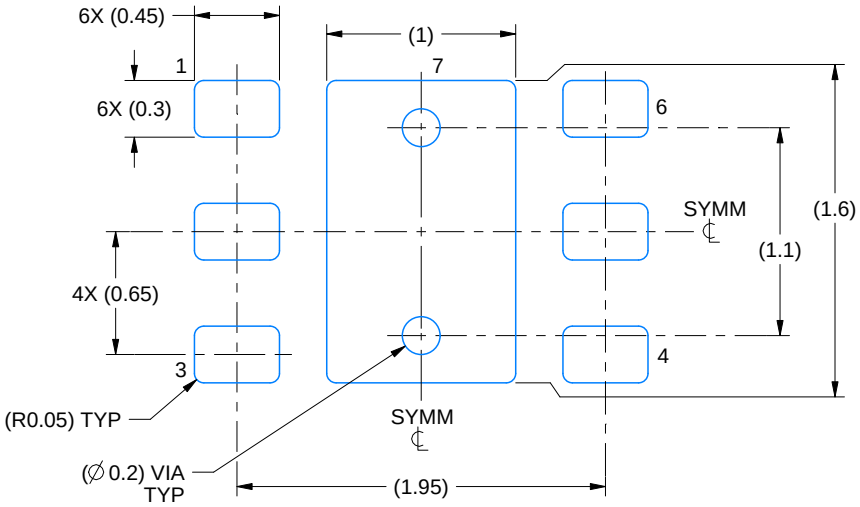

LAND PATTERN EXAMPLE
SCALE:25X

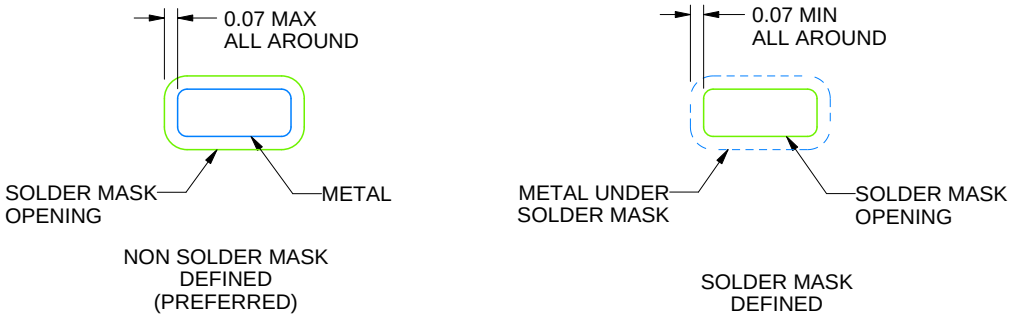

SOLDER MASK DETAILS

4222173/D 09/2026

NOTES: (continued)

5. This package is designed to be soldered to a thermal pad on the board. For more information, see Texas Instruments literature number SLUA271 (www.ti.com/lit/slua271).
6. Vias are optional depending on application, refer to device data sheet. If some or all are implemented, recommended via locations are shown.

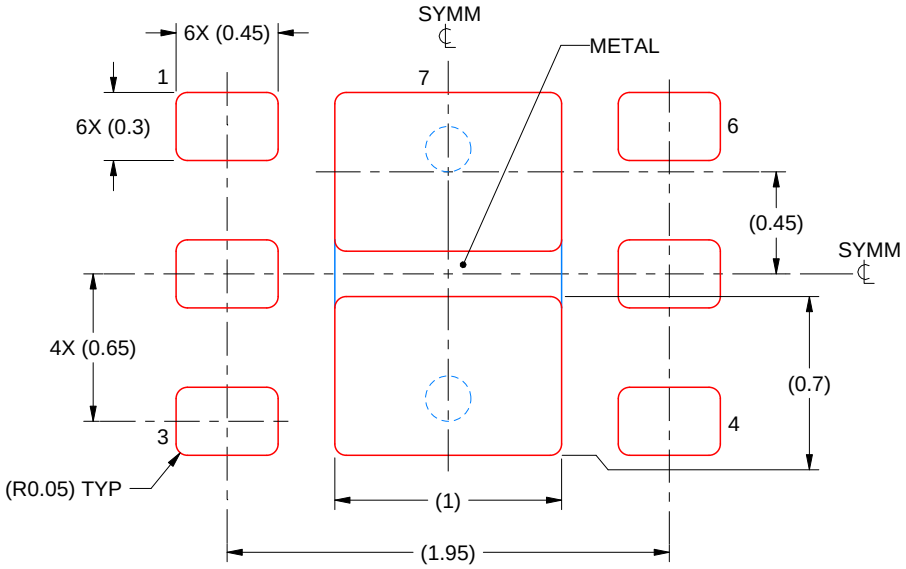

SOLDER PASTE EXAMPLE
BASED ON 0.125 mm THICK STENCIL

EXPOSED PAD #7
88% PRINTED SOLDER COVERAGE BY AREA UNDER PACKAGE
SCALE:30X

4222173/D 09/2026

NOTES: (continued)

7. Laser cutting apertures with trapezoidal walls and rounded corners may offer better paste release. IPC-7525 may have alternate design recommendations.

IMPORTANT NOTICE AND DISCLAIMER

TI PROVIDES TECHNICAL AND RELIABILITY DATA (INCLUDING DATASHEETS), DESIGN RESOURCES (INCLUDING REFERENCE DESIGNS), APPLICATION OR OTHER DESIGN ADVICE, WEB TOOLS, SAFETY INFORMATION, AND OTHER RESOURCES “AS IS” AND WITH ALL FAULTS, AND DISCLAIMS ALL WARRANTIES, EXPRESS AND IMPLIED, INCLUDING WITHOUT LIMITATION ANY IMPLIED WARRANTIES OF MERCHANTABILITY, FITNESS FOR A PARTICULAR PURPOSE OR NON-INFRINGEMENT OF THIRD PARTY INTELLECTUAL PROPERTY RIGHTS.

These resources are intended for skilled developers designing with TI products. You are solely responsible for (1) selecting the appropriate TI products for your application, (2) designing, validating and testing your application, and (3) ensuring your application meets applicable standards, and any other safety, security, regulatory or other requirements.

These resources are subject to change without notice. TI grants you permission to use these resources only for development of an application that uses the TI products described in the resource. Other reproduction and display of these resources is prohibited. No license is granted to any other TI intellectual property right or to any third party intellectual property right. TI disclaims responsibility for, and you fully indemnify TI and its representatives against any claims, damages, costs, losses, and liabilities arising out of your use of these resources.

TI’s products are provided subject to TI’s Terms of Sale, TI’s General Quality Guidelines, or other applicable terms available either on ti.com or provided in conjunction with such TI products. TI’s provision of these resources does not expand or otherwise alter TI’s applicable warranties or warranty disclaimers for TI products. Unless TI explicitly designates a product as custom or customer-specified, TI products are standard, catalog, general purpose devices.

TI objects to and rejects any additional or different terms you may propose.

Copyright © 2026, Texas Instruments Incorporated

Last updated 10/2025