TPS7B81-Q1 Automotive, 150mA, Off-Battery, Ultra-Low I_Q (3µA), Low-Dropout Regulator

1 Features

- AEC-Q100 qualified for automotive applications:
  - Temperature grade 1: –40°C to +125°C, T_A
  - Temperature grade 1: –40°C to +150°C, T_J
- 3V to 40V wide V_{IN} input voltage range with up to 45V transient
- Maximum output current: 150mA
- Low quiescent current I_Q:
  - 300nA typical when EN = low (shutdown mode)
  - 2.7µA typical at light loads
  - 4.5µA maximum at light loads
- 1.5% output-voltage accuracy over line, load and temperature
- Maximum dropout voltage: 540mV at 150mA load current for fixed 5V output version
- Stable with low-ESR (0.001Ω to 5Ω) ceramic output-stability capacitor (1µF to 200µF)
- Fixed output voltage: 5V, 3.3V, and 2.5V
- Integrated fault protection:
  - Thermal shutdown
  - Short-circuit and overcurrent protection
- Functional Safety-Capable
  - Documentation available to aid functional safety system design
- Packages:
  - DGN (8-pin HVSSOP), $R_{\theta JA}$ = 63.9°C/W
  - DRV (6-pin WSON), $R_{\theta JA}$ = 72.8°C/W
  - DRV (6-pin WSON wettable flank), $R_{\theta JA}$ = 72.8°C/W
  - KVU (5-pin TO-252), $R_{\theta JA}$ = 38.8°C/W

2 Applications

- Automotive head units
- Headlights
- Battery management systems (BMS)
- Inverter and motor controls

3 Description

In automotive battery-connected applications, low quiescent current (I_Q) is important to conserve energy and to extend battery lifetime. Always-on systems must have ultra-low I_Q over an extended temperature range to enable sustained operation when the vehicle ignition is off.

The TPS7B81-Q1 is a low-dropout (LDO) linear regulator designed for up to 40V V_{IN} applications. With only a 2.7µA typical quiescent current at light load, the device is an optimum design for powering microcontrollers and controller area network and local interconnect network (CAN/LIN) transceivers in standby systems.

The device features integrated short-circuit and overcurrent protection. This device operates in ambient temperatures from –40°C to +125°C and with junction temperatures from –40°C to +150°C. Additionally, this device is available in several packages of varying size and thermal conductivity. The compact WSON package comes in a wettable flank option. The TO-252 package enables sustained operation despite significant dissipation across the device. These features make the device well suited as a power supply for various battery-connected automotive applications.

Package Information

PART NUMBER	PACKAGE(1)	PACKAGE SIZE(2)
TPS7B81-Q1	DGN (HVSSOP, 8)	3mm × 3mm
	DRV (WSON, 6)	2mm × 2mm
	DRV (WSON wettable flank, 6)	2mm × 2mm
	KVU (TO-252, 5)	6.1mm × 6.6mm

(1) For more information, see the *Mechanical, Packaging, and Orderable Information*.
(2) The package size (length × width) is a nominal value and includes pins, where applicable.

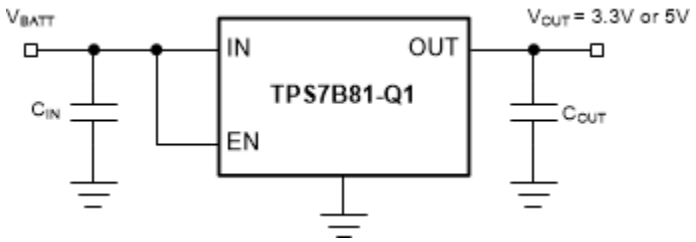

Typical Application Schematic

An IMPORTANT NOTICE at the end of this data sheet addresses availability, warranty, changes, use in safety-critical applications, intellectual property matters and other important disclaimers. PRODUCTION DATA.

Table of Contents

1 Features....1
2 Applications....1
3 Description....1
4 Pin Configuration and Functions....3
5 Specifications....4
5.1 Absolute Maximum Ratings....4
5.2 ESD Ratings....4
5.3 Recommended Operating Conditions....4
5.4 Thermal Information....5
5.5 Electrical Characteristics....5
5.6 Typical Characteristics....7
6 Detailed Description....11
6.1 Overview....11
6.2 Functional Block Diagram....11
6.3 Feature Description....11
6.4 Device Functional Modes....12
7 Application and Implementation....13
7.1 Application Information....13
7.2 Typical Application....17
7.3 Power Supply Recommendations....18
7.4 Layout....18
8 Device and Documentation Support....20
8.1 Device Support....20
8.2 Receiving Notification of Documentation Updates....20
8.3 Support Resources....20
8.4 Trademarks....20
8.5 Electrostatic Discharge Caution....20
8.6 Glossary....20
9 Revision History....20
10 Mechanical, Packaging, and Orderable Information....21

Copyright © 2025 Texas Instruments Incorporated

4 Pin Configuration and Functions

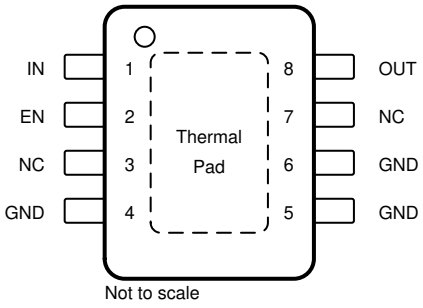

Figure 4-1. DGN Package, 8-Pin HVSSOP PowerPAD™ (Top View)

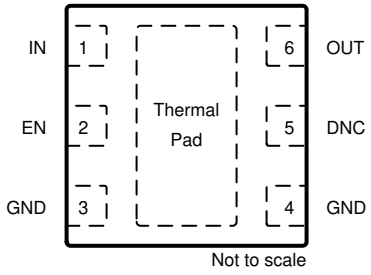

Figure 4-2. DRV Package, 6-Pin WSON PowerPAD™ (Top View)

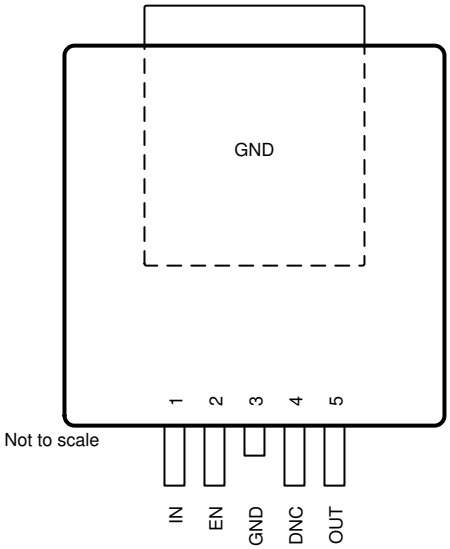

Figure 4-3. KVU Package, 5-Pin TO-252 (Top View)

Table 4-1. Pin Functions

PIN				TYPE	DESCRIPTION
NAME	NO.				
	DGN	DRV	KVU		
DNC	—	5	4	—	Do not connect to a biased voltage. Tie this pin to ground or leave floating.
EN	2	2	2	I	Enable input pin. Drive EN greater than V_{IH} to turn on the regulator. Drive EN less than V_{IL} to put the low-dropout (LDO) into shutdown mode.
GND	4, 5, 6	3,4	3, TAB	—	Ground reference
IN	1	1	1	I	Input power-supply pin. For best transient response and to minimize input impedance, use the recommended value or larger ceramic capacitor from IN to ground as listed in the *Recommended Operating Conditions* table and the *Input Capacitor* section. Place the input capacitor as close to the output of the device as possible.
NC	3, 7	—	—	—	Not internally connected
OUT	8	6	5	O	Regulated output voltage pin. A capacitor is required from OUT to ground for stability. For best transient response, use the nominal recommended value or larger ceramic capacitor from OUT to ground; see the *Recommended Operating Conditions* table and the *Output Capacitor* section. Place the output capacitor as close to output of the device as possible.
Thermal pad				—	Connect the thermal pad to a large-area GND plane for improved thermal performance.

Copyright © 2025 Texas Instruments Incorporated

5 Specifications

5.1 Absolute Maximum Ratings

over operating ambient temperature range (unless otherwise noted)(1) (2)

		MIN	MAX	UNIT
V_{IN}	Unregulated input(3)	–0.3	45	V
V_{EN}	Enable input(3)	–0.3	V_{IN}	V
V_{OUT}	Regulated output	–0.3	7	V
T_J	Junction temperature range	–40	150	°C
T_{stg}	Storage temperature range	–40	150	°C

(1) Operation outside the *Absolute Maximum Ratings* may cause permanent device damage. *Absolute Maximum Ratings* do not imply functional operation of the device at these or any other conditions beyond those listed under *Recommended Operating Conditions*. If used outside the *Recommended Operating Conditions* but within the *Absolute Maximum Ratings*, the device may not be fully functional, and this may affect device reliability, functionality, performance, and shorten the device lifetime.
(2) All voltage values are with respect to GND.
(3) Absolute maximum voltage, can withstand 45V for 200ms.

5.2 ESD Ratings

				VALUE	UNIT
$V_{(ESD)}$	Electrostatic discharge	Human-body model (HBM), per AEC Q100-002(1)		±2000	V
		Charged-device model (CDM), per AEC Q100-011	Corner pins	±750	
			Other pins	±500	

(1) AEC Q100-002 indicates that HBM stressing shall be in accordance with the ANSI/ESDA/JEDEC JS-001 specification.

5.3 Recommended Operating Conditions

over operating ambient temperature range (unless otherwise noted)

		MIN	MAX	UNIT
V_{IN}	Unregulated input voltage	3	40	V
V_{EN}	Enable input voltage	0	V_{IN}	V
C_{OUT}	Output capacitor requirements(1)	1	200	µF
ESR	Output capacitor ESR requirements(2)	0.001	5	Ω
T_A	Ambient temperature range	–40	125	°C
T_J	Junction temperature range	–40	150	°C

(1) The output capacitance range specified in the table is the effective value.
(2) Relevant ESR value at f = 10kHz.

Copyright © 2025 Texas Instruments Incorporated

5.4 Thermal Information

THERMAL METRIC[1]		TPS7B81-Q1			UNIT
		DGN (HVSSOP)	DRV (WSON)	KVU (TO-252)	
		8 PINS	6 PINS	5 PINS	
$R_{\theta JA}$	Junction-to-ambient thermal resistance	63.9	72.8	31.1	°C/W
$R_{\theta JC(top)}$	Junction-to-case (top) thermal resistance	50.2	85.8	39.9	°C/W
$R_{\theta JB}$	Junction-to-board thermal resistance	22.6	37.4	9.9	°C/W
ψ_{JT}	Junction-to-top characterization parameter	1.8	2.7	4.2	°C/W
ψ_{JB}	Junction-to-board characterization parameter	22.3	37.3	9.9	°C/W
$R_{\theta JC(bot)}$	Junction-to-case (bottom) thermal resistance	12.1	13.8	2.8	°C/W

(1) For more information about traditional and new thermal metrics, see the *Semiconductor and IC Package Thermal Metrics* application note.

5.5 Electrical Characteristics

over operating ambient temperature range, T_J = –40°C to +150°C, V_{IN} = 14V, and 10µF ceramic output capacitor (unless otherwise noted)

PARAMETER		TEST CONDITIONS		MIN	TYP	MAX	UNIT
SUPPLY VOLTAGE AND CURRENT (IN)							
V_{IN}	Input voltage			$V_{OUT(Nom)}$ + $V_{(Dropout)}$		40	V
$I_{(SD)}$	Shutdown current	EN = 0V			0.3	1	µA
$I_{(Q)}$	Quiescent current	V_{IN} = 6V to 40V, EN ≥ 2V, I_{OUT} = 0mA			1.9	3.5	µA
		V_{IN} = 6V to 40V, EN ≥ 2V, I_{OUT} = 0.2mA	DGN package		2.7	6.5	
			DRV and KVU packages		2.7	4.5	
$V_{(IN, UVLO)}$	V_{IN} undervoltage detection	Ramp V_{IN} down until the output turns off				2.7	V
		Hysteresis			200		mV
ENABLE INPUT (EN)							
V_{IL}	Logic-input low level					0.7	V
V_{IH}	Logic-input high level			2			V
I_{EN}	Enable current				10		nA
REGULATED OUTPUT (OUT)							
V_{OUT}	Regulated output	V_{IN} = V_{OUT} + $V_{(Dropout)}$ to 40V, I_{OUT} = 1mA to 150mA		–1.5%		1.5%	
$V_{(Line-Reg)}$	Line regulation	V_{IN} = 6V to 40V, I_{OUT} = 10mA				10	mV
$V_{(Load-Reg)}$	Load regulation	V_{IN} = 14V, I_{OUT} = 1mA to 150mA	DGN package			20	mV
			DRV and KVU packages			10	

Copyright © 2025 Texas Instruments Incorporated

5.5 Electrical Characteristics (continued)

over operating ambient temperature range, T_J = –40°C to +150°C, V_{IN} = 14V, and 10µF ceramic output capacitor (unless otherwise noted)

PARAMETER		TEST CONDITIONS			MIN	TYP	MAX	UNIT
$V_{(Dropout)}$	Dropout voltage(1)	V_{OUT} = 5V	I_{OUT} = 150mA	DGN package		270	540	mV
				DRV and KVU packages		325	585	
			I_{OUT} = 100mA	DGN package		180	350	
				DRV and KVU packages		200	390	
		V_{OUT} = 3.3V	I_{OUT} = 150mA	DGN package			650	
				DRV and KVU packages		345	675	
			I_{OUT} = 100mA			255	450	
I_{OUT}	Output current	V_{OUT} in regulation, V_{IN} = 7V for the fixed 5V option, V_{IN} = 5.8V for the fixed 3.3V option			0		150	mA
$I_{(CL)}$	Output current limit	V_{OUT} short to 90% × V_{OUT}			180	510	690	mA
PSRR	Power-supply ripple rejection	$V_{(Ripple)}$ = 0.5V_{PP}, I_{OUT} = 10mA, frequency = 100Hz, C_{OUT} = 2.2µF				60		dB
OPERATING TEMPERATURE RANGE								
$T_{(SD)}$	Junction shutdown temperature					175		°C
$T_{(HYST)}$	Hysteresis of thermal shutdown					20		°C

(1) Dropout is not valid for the 2.5V output because of the minimum input voltage limits.

Copyright © 2025 Texas Instruments Incorporated

5.6 Typical Characteristics

at T_J = –40°C to +150°C, V_{IN} = 14V, and V_{EN} ≥ 2V (unless otherwise noted)

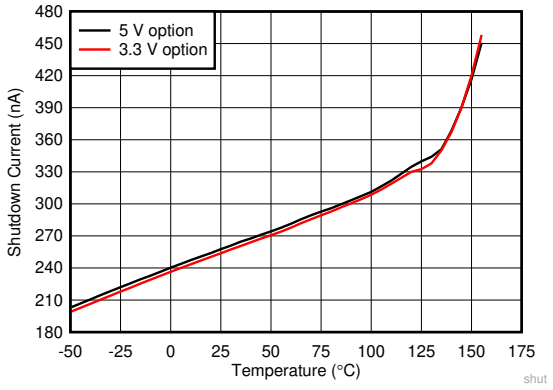

V_{EN} = 0V

Figure 5-1. Shutdown Current vs Ambient Temperature

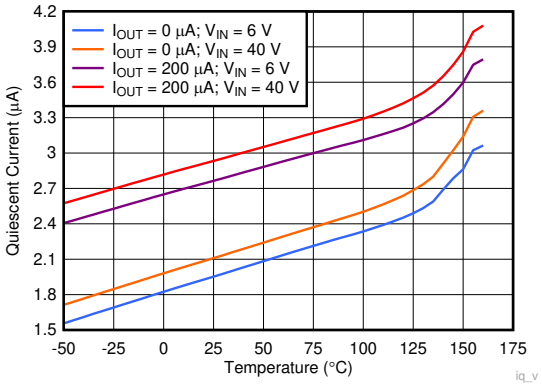

V_{OUT} = 5V

Figure 5-2. Quiescent Current vs Ambient Temperature

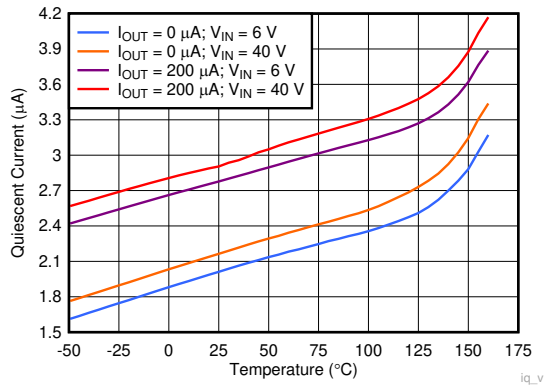

V_{OUT} = 3.3V

Figure 5-3. Quiescent Current vs Ambient Temperature

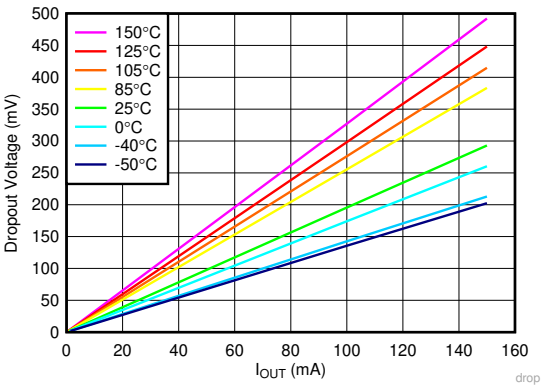

V_{OUT} = 5V, DRV package

Figure 5-4. Dropout Voltage vs Output Current

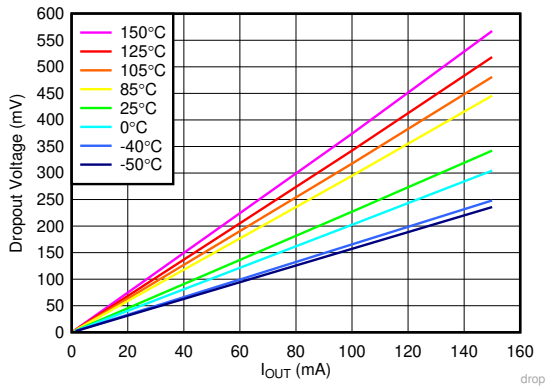

V_{OUT} = 3.3V, DRV package

Figure 5-5. Dropout Voltage vs Output Current

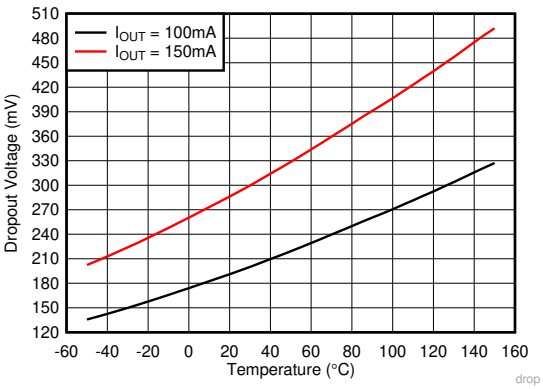

V_{OUT} = 5V

Figure 5-6. Dropout Voltage vs Ambient Temperature

Copyright © 2025 Texas Instruments Incorporated

5.6 Typical Characteristics (continued)

at T_J = –40°C to +150°C, V_{IN} = 14V, and V_{EN} ≥ 2V (unless otherwise noted)

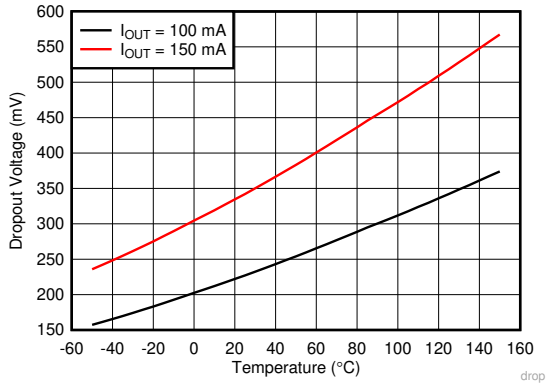

V_{OUT} = 3.3V

Figure 5-7. Dropout Voltage vs Ambient Temperature

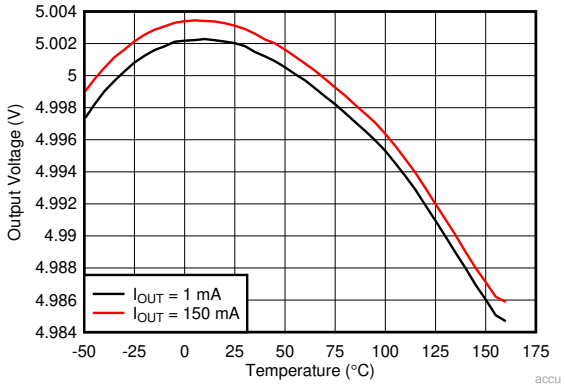

V_{OUT} = 5V

Figure 5-8. Output Voltage vs Ambient Temperature

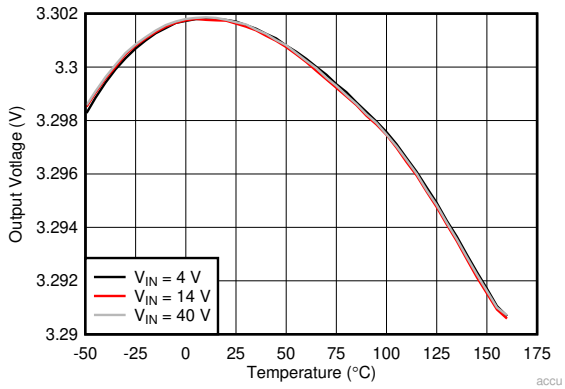

V_{OUT} = 3.3V, I_{OUT} = 1mA

Figure 5-9. Output Voltage vs Ambient Temperature

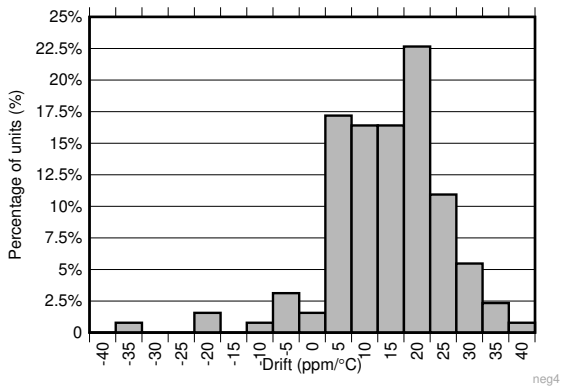

3.3V and 5V options, I_{OUT} = 1mA

Figure 5-10. Temperature Drift Histogram (–40°C to +25°C)

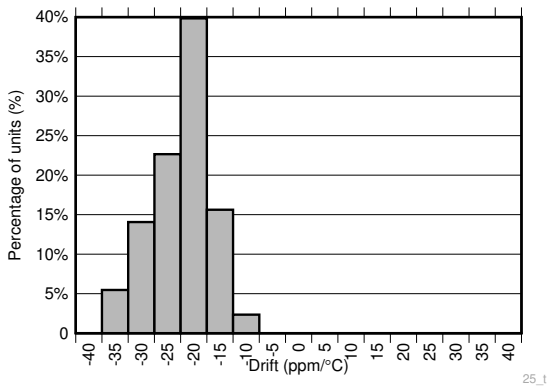

3.3V and 5V options, I_{OUT} = 1mA

Figure 5-11. Temperature Drift Histogram (25°C to 150°C)

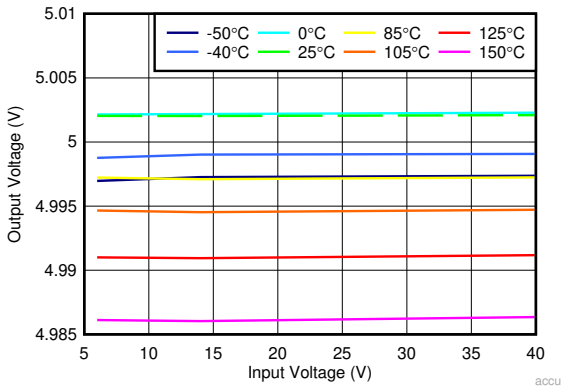

V_{OUT} = 5V, I_{OUT} = 1mA

Figure 5-12. Output Voltage vs Input Voltage

Copyright © 2025 Texas Instruments Incorporated

5.6 Typical Characteristics (continued)

at T_J = –40°C to +150°C, V_{IN} = 14V, and V_{EN} ≥ 2V (unless otherwise noted)

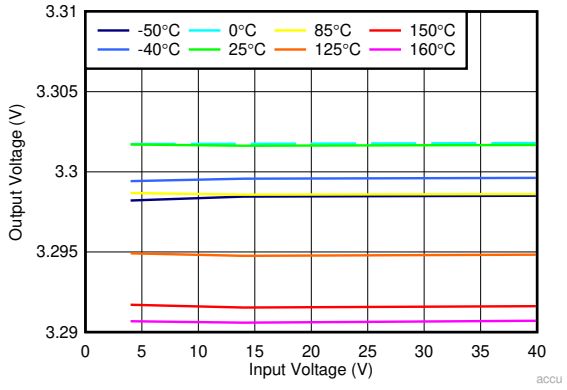

V_{OUT} = 3.3V, I_{OUT} = 1mA

Figure 5-13. Output Voltage vs Input Voltage

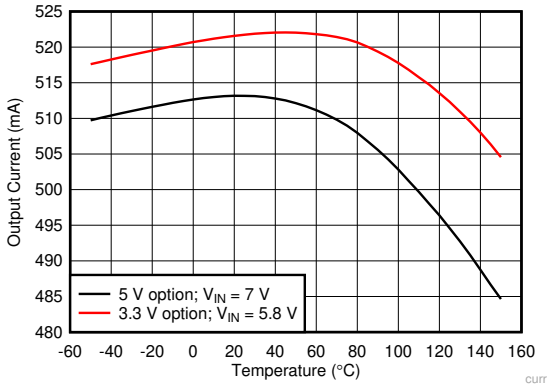

V_{OUT} is shorted to 90% × $V_{OUT(NOM)}$

Figure 5-14. Output Current Limit vs Ambient Temperature

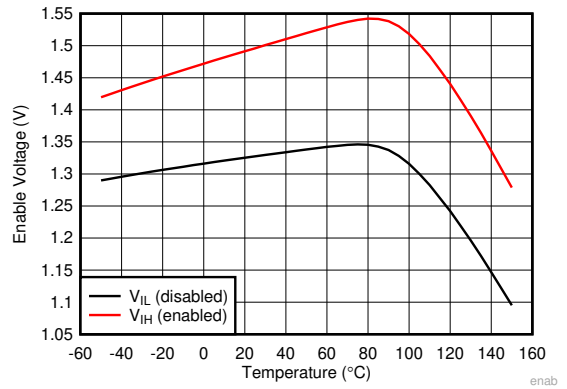

A.

Figure 5-15. Enable Voltage vs Ambient Temperature

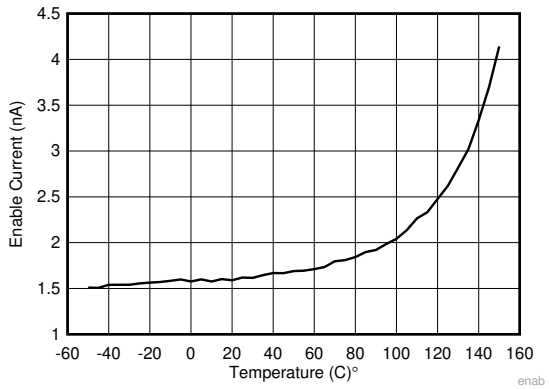

A.

Figure 5-16. Enable Current vs Ambient Temperature

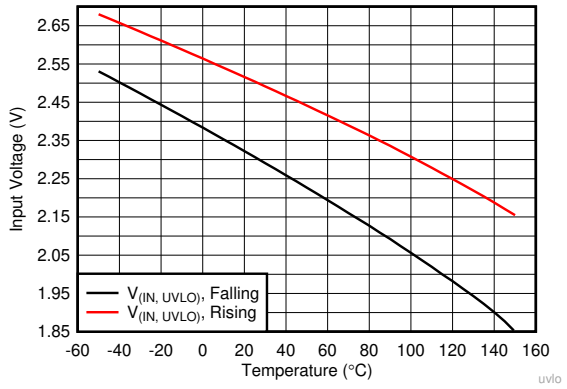

A.

Figure 5-17. UVLO vs Ambient Temperature

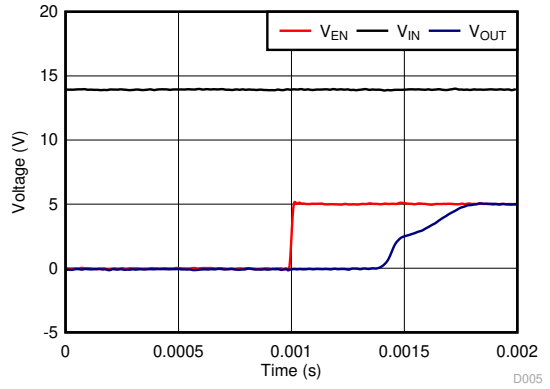

V_{OUT} = 5V, C_{IN} = 1µF, C_{OUT} = 1µF

Figure 5-18. Startup With Enable

Copyright © 2025 Texas Instruments Incorporated

5.6 Typical Characteristics (continued)

at T_J = –40°C to +150°C, V_{IN} = 14V, and V_{EN} ≥ 2V (unless otherwise noted)

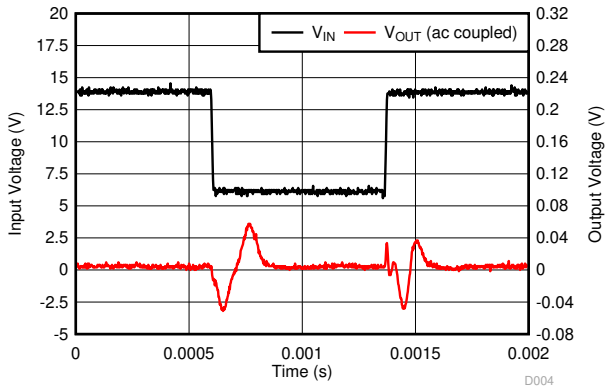

V_{OUT} = 3.3V, C_{IN} = 0µF, C_{OUT} = 1µF, I_{OUT} = 100mA, slew rate = 1V/µs

Figure 5-19. Line Transient

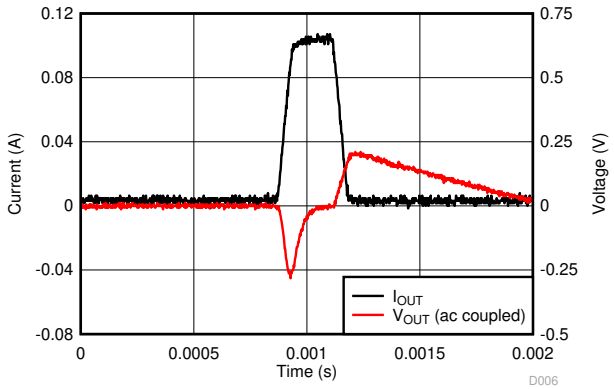

V_{OUT} = 5V, C_{IN} = 1µF, C_{OUT} = 1µF, I_{OUT} = 1mA → 100mA → 1mA, slew rate = 1mA/µs

Figure 5-20. Load Transient

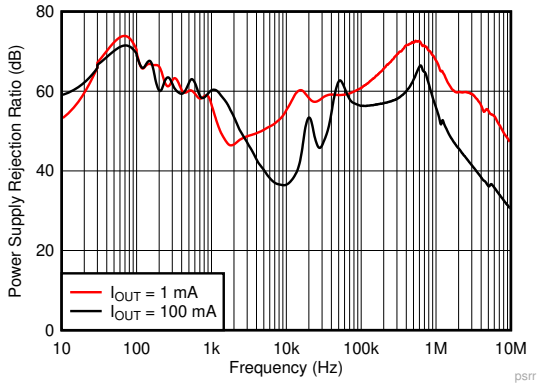

V_{OUT} = 5V, C_{IN} = 0µF, C_{OUT} = 10µF

Figure 5-21. PSRR vs Frequency

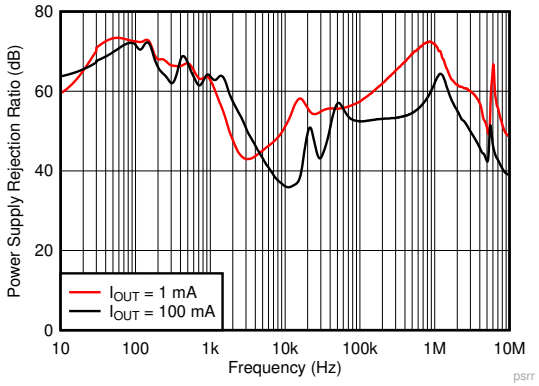

V_{OUT} = 3.3V, C_{IN} = 0µF, C_{OUT} = 10µF

Figure 5-22. PSRR vs Frequency

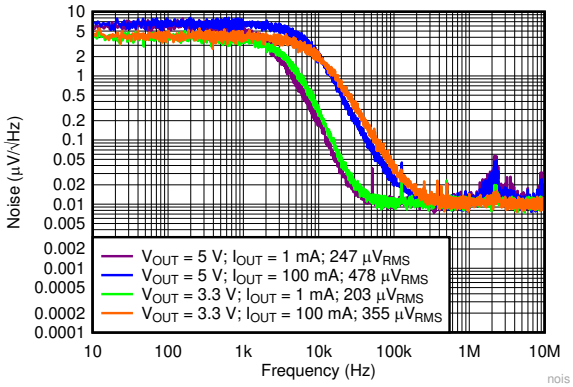

C_{IN} = 0.1µF, C_{OUT} = 10µF

Figure 5-23. Noise vs Frequency

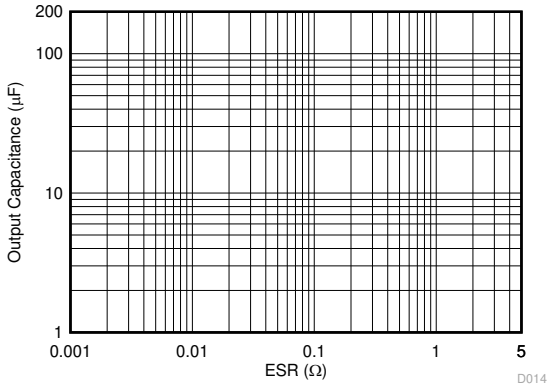

Figure 5-24. Output Capacitance vs ESR Stability

Copyright © 2025 Texas Instruments Incorporated

6 Detailed Description

6.1 Overview

The TPS7B81-Q1 is a 40V, 150mA, low-dropout (LDO) linear regulator with ultra-low quiescent current. This voltage regulator consumes only 3µA of quiescent current at light load, and is designed for the automotive always-on application.

6.2 Functional Block Diagram

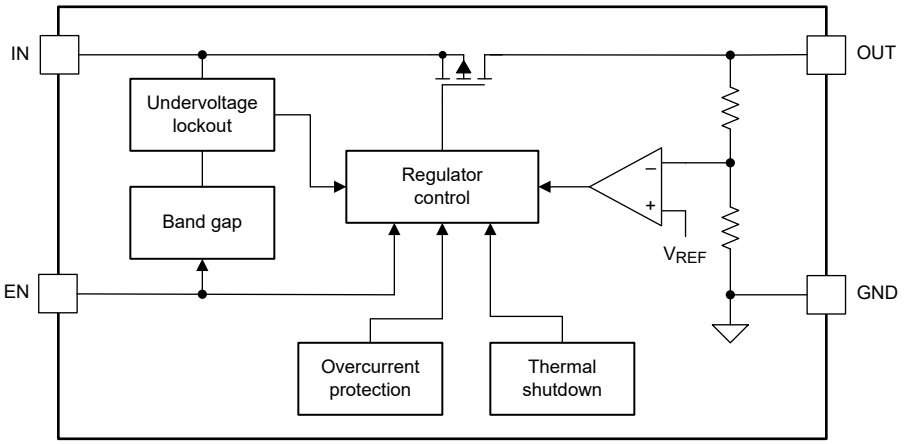

6.3 Feature Description

6.3.1 Device Enable (EN)

The EN pin is a high-voltage-tolerant pin. A high input activates the device and turns the regulation on. Connect this pin to an external microcontroller or a digital circuit to enable and disable the device, or connect to the IN pin for self-bias applications.

6.3.2 Undervoltage Shutdown

This device has an integrated undervoltage lockout (UVLO) circuit to shut down the output if the input voltage (V_{IN}) falls below an internal UVLO threshold ($V_{(UVLO)}$). This feature ensures that the regulator does not latch into an unknown state during low-input-voltage conditions. If the input voltage has a negative transient that drops below the UVLO threshold and recovers, the regulator shuts down and powers up with a normal power-up sequence when the input voltage is above the required level.

6.3.3 Current Limit

This device features current-limit protection to keep the device in a safe operating area when an overload or output short-to-ground condition occurs. This feature protects the device from excessive power dissipation. For example, during a short-circuit condition on the output, the fault protection limits the current through the pass element to $I_{(LIM)}$ to protect the device from excessive power dissipation.

6.3.4 Thermal Shutdown

This device incorporates a thermal shutdown (TSD) circuit as protection from overheating. For continuous normal operation, the junction temperature must not exceed the TSD trip point. If the junction temperature exceeds the TSD trip point, the output turns off. When the junction temperature falls below the TSD trip point minus the thermal shutdown hysteresis, the output turns on again.

Copyright © 2025 Texas Instruments Incorporated

6.4 Device Functional Modes

6.4.1 Operation With V_{IN} Lower Than 3V

The device normally operates with input voltages above 3V. The device can also operate at lower input voltages; the maximum UVLO voltage is 2.7V. The device does not operate at input voltages below the actual UVLO voltage.

6.4.2 Operation With V_{IN} Larger Than 3V

When V_{IN} is greater than 3V, if V_{IN} is also higher than the output set value plus the device dropout voltage, V_{OUT} is equal to the set value. Otherwise, V_{OUT} is equal to V_{IN} minus the dropout voltage.

Table 6-1. Device Functional Mode Comparison

OPERATING MODE	PARAMETER			
Normal mode	$V_{IN} > V_{OUT(nom)} + V_{(Dropout)}$ and $V_{IN} \geq 3V$	$V_{EN} > V_{IH}$	$I_{OUT} < I_{CL}$	$T_J < 160°C$
Dropout mode	$3V \leq V_{IN} < V_{OUT(nom)} + V_{(Dropout)}$	$V_{EN} > V_{IH}$	$I_{OUT} < I_{CL}$	$T_J < 160°C$
Disabled mode (any true condition disables the device)	$V_{IN} < V_{(IN, UVLO)}$	$V_{EN} < V_{IL}$	—	$T_J > 160°C$

Copyright © 2025 Texas Instruments Incorporated

7 Application and Implementation

Note

Information in the following applications sections is not part of the TI component specification, and TI does not warrant its accuracy or completeness. TI's customers are responsible for determining suitability of components for their purposes, as well as validating and testing their design implementation to confirm system functionality.

7.1 Application Information

The TPS7B81-Q1 is a 150mA, 40V, low-dropout (LDO) linear regulator with ultra low quiescent current. The PSpice transient model is available for download on the product folder and can be used to evaluate the basic function of the device.

7.1.1 Power Dissipation

Circuit reliability demands that proper consideration is given to device power dissipation, location of the circuit on the printed circuit board (PCB), and correct sizing of the thermal plane. The PCB area around the regulator must be as free as possible of other heat-generating devices that cause added thermal stresses.

As a first-order approximation, power dissipation in the regulator depends on the input-to-output voltage difference and load conditions. P_D can be approximated using Equation 1:

$$P_D = (V_{OUT} - V_{IN}) \times I_{OUT} \quad (1)$$

An important note is that power dissipation can be minimized, and thus greater efficiency achieved, by proper selection of the system voltage rails. Proper selection allows the minimum input-to-output voltage differential to be obtained. The low dropout of the device allows for maximum efficiency across a wide range of output voltages.

The main heat conduction path for the device is through the thermal pad on the package. As such, the thermal pad must be soldered to a copper pad area under the device. This pad area contains an array of plated vias that conduct heat to any inner plane areas or to a bottom-side copper plane.

The maximum power dissipation determines the maximum allowable junction temperature (T_J) for the device. Power dissipation and junction temperature are most often related by the junction-to-ambient thermal resistance ($R_{\theta JA}$) of the combined PCB, device package, and the temperature of the ambient air (T_A), according to Equation 2. The equation is rearranged for output current in Equation 3.

$$T_J = T_A + R_{\theta JA} \times P_D \quad (2)$$

$$I_{OUT} = \left(T_J - T_A\right) \div \left[R_{\theta JA} \times (V_{IN} - V_{OUT})\right] \quad (3)$$

Unfortunately, this thermal resistance ($R_{\theta JA}$) is highly dependent on the heat-spreading capability built into the particular PCB design, and therefore varies according to the total copper area, copper weight, and location of the planes. The $R_{\theta JA}$ recorded in the v table is determined by the JEDEC standard, PCB, and copper-spreading area, and is only used as a relative measure of package thermal performance. Note that for a well-designed thermal layout, $R_{\theta JA}$ is actually the sum of the package junction-to-case (bottom) thermal resistance ($R_{\theta JCbot}$) plus the thermal resistance contribution by the PCB copper.

Figure 7-1 through Figure 7-6 show the functions of $R_{\theta JA}$ and ψ_{JB} vs copper area and thickness. These plots are generated with a 101.6mm x 101.6mm x 1.6mm PCB of two and four layers. For the four layer board, inner planes use 1oz copper thickness. Outer layers are simulated with both 1oz and 2oz copper thickness. A 2x 1 array of thermal vias of 300µm drill diameter and 25µm Cu plating is located beneath the thermal pad of the device. The thermal vias connect the top layer, the bottom layer and, in the case of the 4-layer board, the first inner GND plane. Each of the layers has a copper plane of equal area.

Copyright © 2025 Texas Instruments Incorporated

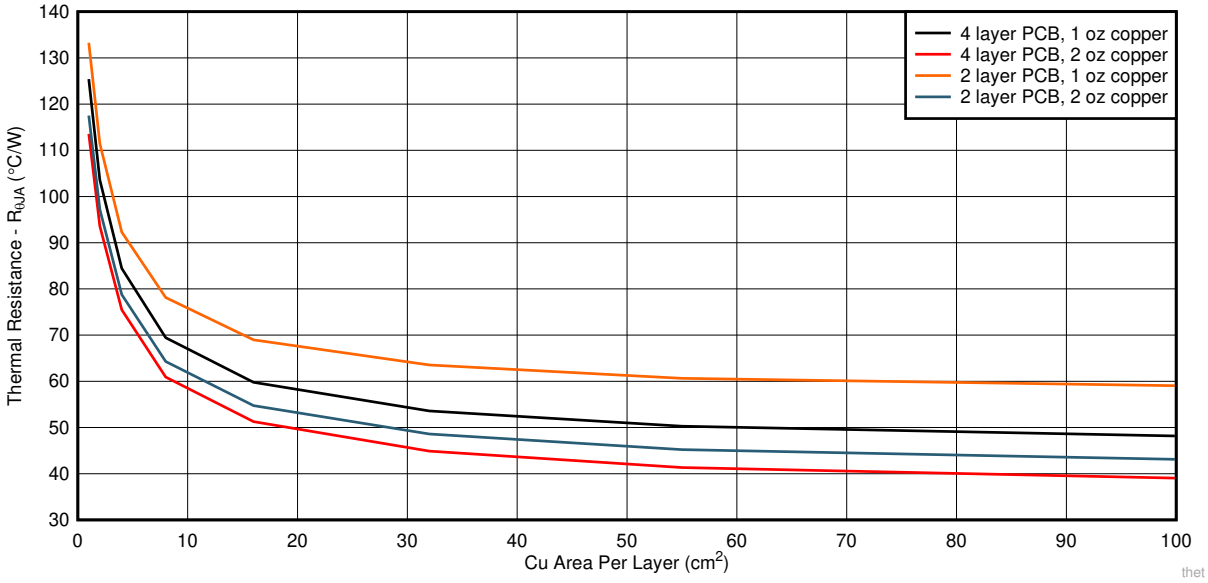

Figure 7-1. $R_{\theta JA}$ versus Cu Area for the WSON (DRV) Package

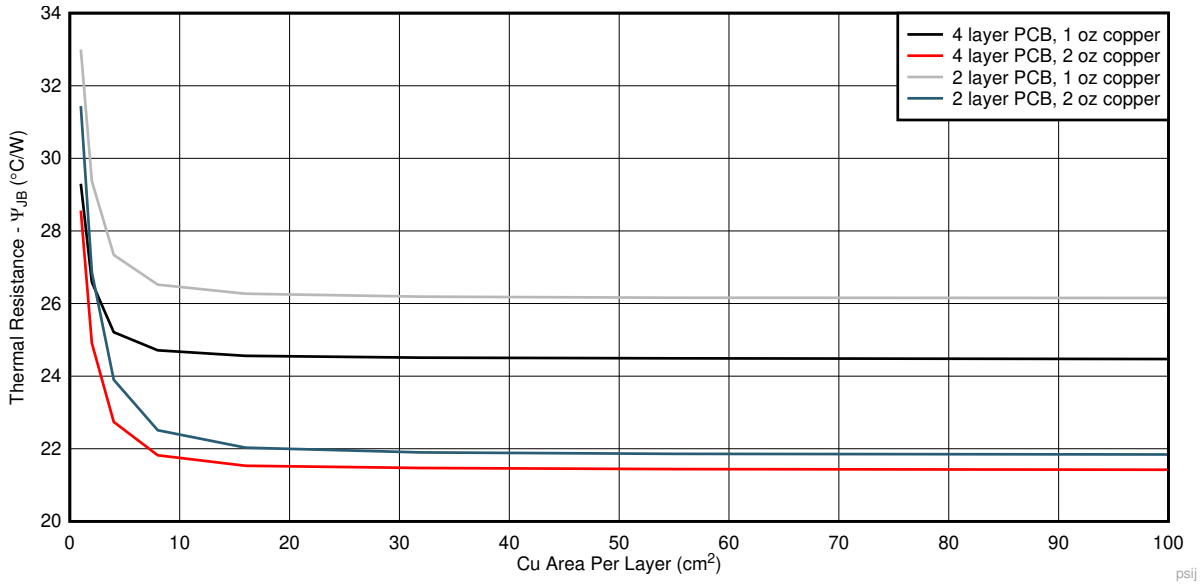

Figure 7-2. ψ_{JB} versus Cu Area for the WSON (DRV) Package

Copyright © 2025 Texas Instruments Incorporated

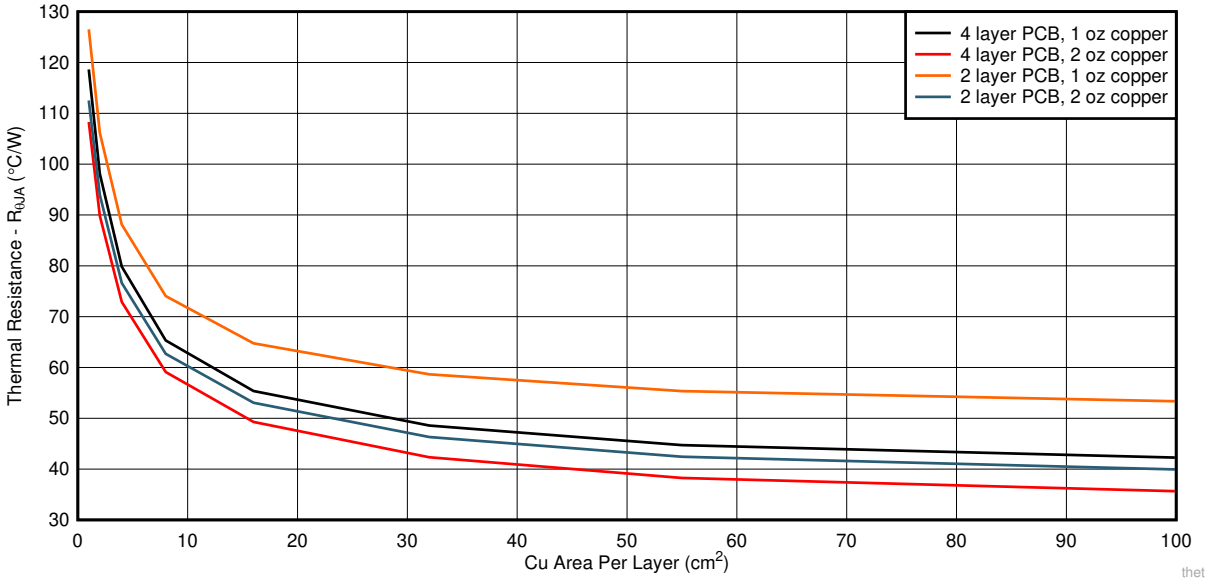

Figure 7-3. $R_{\theta JA}$ versus Cu Area for the HVSSOP (DGN) Package

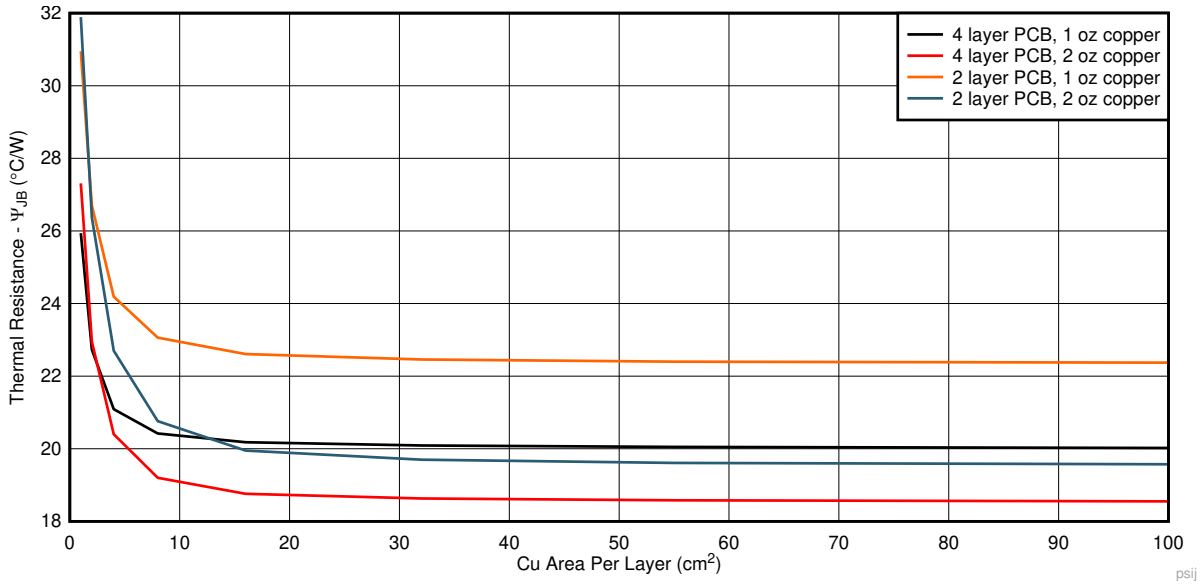

Figure 7-4. Ψ_{JB} versus Cu Area for the HVSSOP (DGN) Package

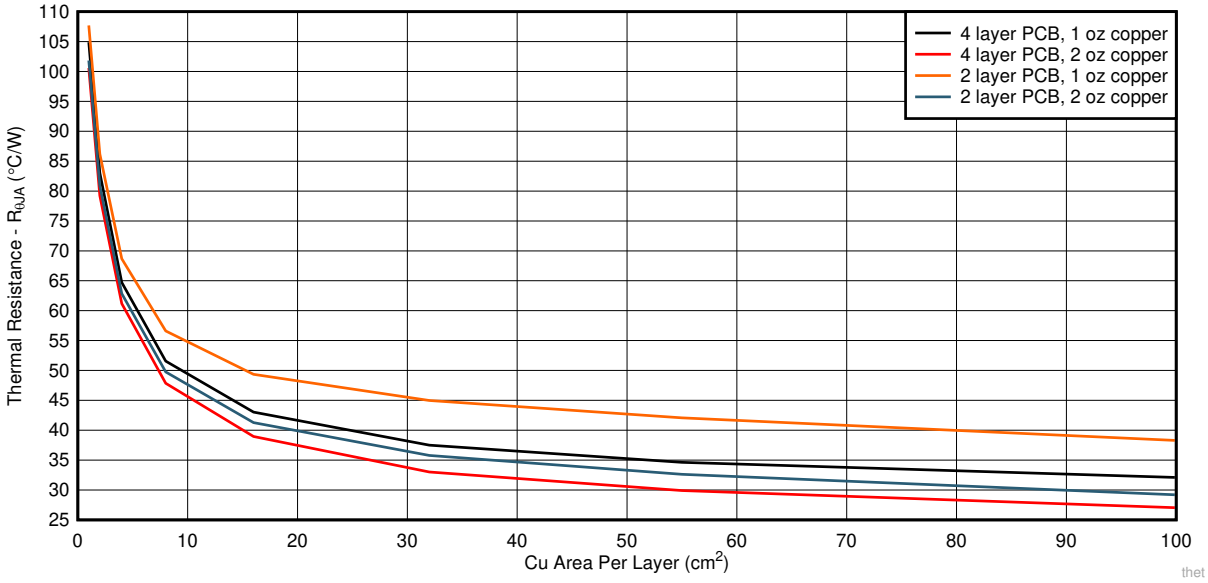

Figure 7-5. $R_{\theta JA}$ versus Cu Area for the TO-252 (KVU) Package

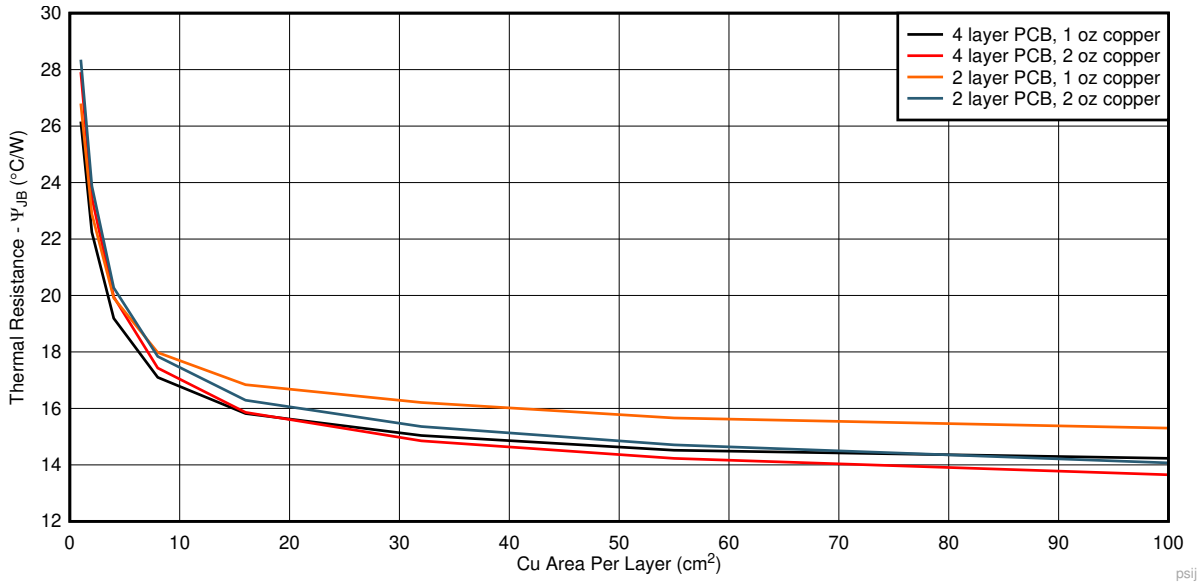

Figure 7-6. Ψ_{JB} versus Cu Area for the TO-252 (KVU) Package

Copyright © 2025 Texas Instruments Incorporated

7.1.1.1 Estimating Junction Temperature

The JEDEC standard now recommends the use of psi (Ψ) thermal metrics to estimate the junction temperatures of the LDO when in-circuit on a typical PCB board application. These metrics are not strictly speaking thermal resistances, but rather offer practical and relative means of estimating junction temperatures. These psi metrics are determined to be significantly independent of the copper-spreading area. The key thermal metrics (Ψ_{JT} and Ψ_{JB}) are given in the *Section 5.4* table and are used in accordance with Equation 4.

$$\Psi_{JT}: T_J = T_T + \Psi_{JT} \times PD$$
$$\Psi_{JB}: T_J = T_B + \Psi_{JB} \times PD \quad (4)$$

where:

- P_D is the power dissipated as explained in Equation 1
- T_T is the temperature at the center-top of the device package
- T_B is the PCB surface temperature measured 1mm from the device package and centered on the package edge

7.2 Typical Application

Figure 7-7 shows a typical application circuit for the TPS7B81-Q1. Different external component values can be used, depending on the end application. An application may require a larger output capacitor during fast load steps to prevent a large drop on the output voltage. TI recommends using a low-equivalent series resistance (ESR) ceramic capacitor with an X5R- or X7R-type dielectric.

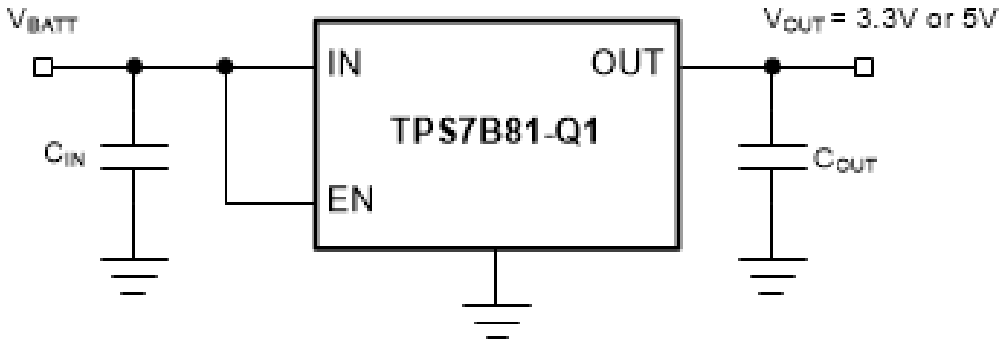

Figure 7-7. TPS7B81-Q1 Typical Application Schematic

7.2.1 Design Requirements

Use the parameters listed in Table 7-1 for this design example.

Table 7-1. Design Requirements Parameters

PARAMETER	VALUE
Input voltage range	3V to 40V
Output voltage	5V or 3.3V
Output current	150mA maximum

7.2.2 Detailed Design Procedure

To begin the design process, determine the following:

- Input voltage range
- Output voltage
- Output current

Copyright © 2025 Texas Instruments Incorporated

7.2.2.1 Input Capacitor

Although an input capacitor is not required for stability, good analog design practice is to connect a 10µF to 22µF capacitor from IN to GND. This capacitor counteracts reactive input sources and improves transient response, input ripple rejection, and PSRR. The voltage rating must be greater than the maximum input voltage.

7.2.2.2 Output Capacitor

To confirm the stability of the TPS7B81-Q1, the device requires an output capacitor with a value in the range from 1µF to 200µF and with an ESR range between 0.001Ω and 5Ω. TI recommends selecting a ceramic capacitor with low ESR to improve the load transient response.

7.2.3 Application Curve

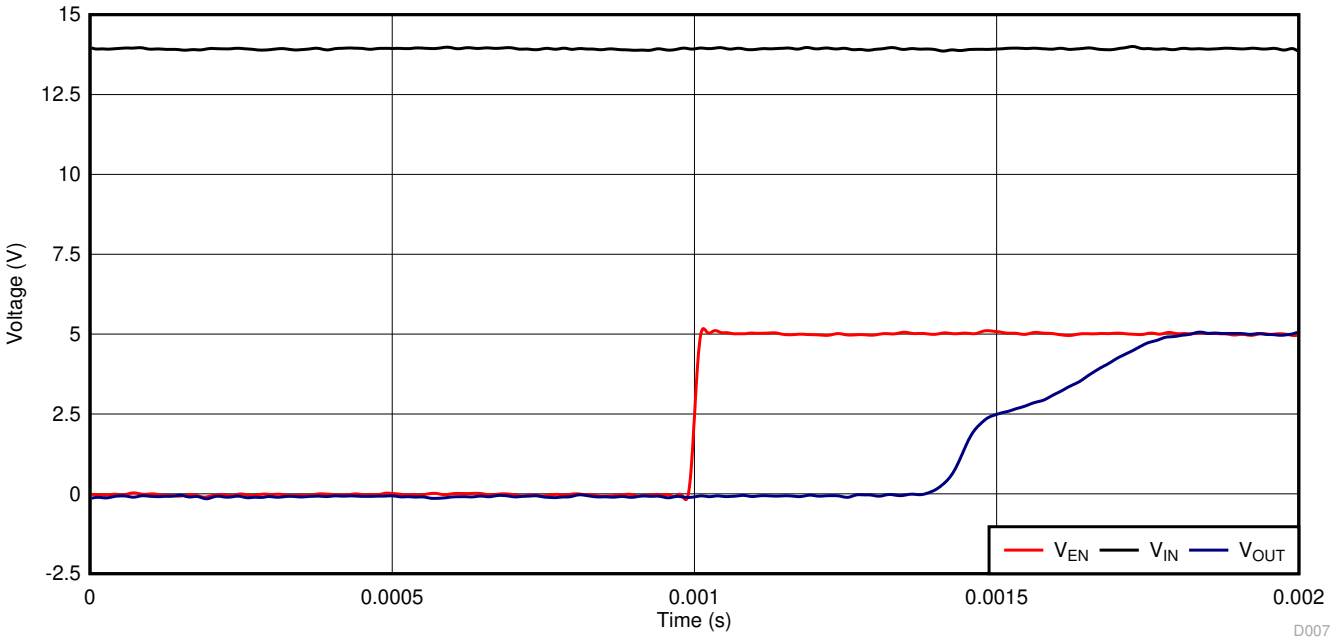

Figure 7-8. TPS7B81-Q1 Power-Up Waveform (5V)

7.3 Power Supply Recommendations

The device is designed to operate from an input-voltage supply range from 3V to 40V. The input supply must be well regulated. If the input supply is located more than a few inches from the TPS7B81-Q1, TI recommends adding a capacitor with a value greater than or equal to 10µF with a 0.1µF bypass capacitor in parallel at the input.

7.4 Layout

7.4.1 Layout Guidelines

Layout is an important step for LDO power supplies, especially for high-voltage and large-output-current supplies. If the layout is not carefully designed, the regulator can fail to deliver enough output current because of thermal limitations. To improve the thermal performance of the device, and to maximize the current output at high ambient temperature, spread the copper under the thermal pad as far as possible and put enough thermal vias on the copper under the thermal pad. Figure 7-9 shows an example layout.

Copyright © 2025 Texas Instruments Incorporated

7.4.2 Layout Example

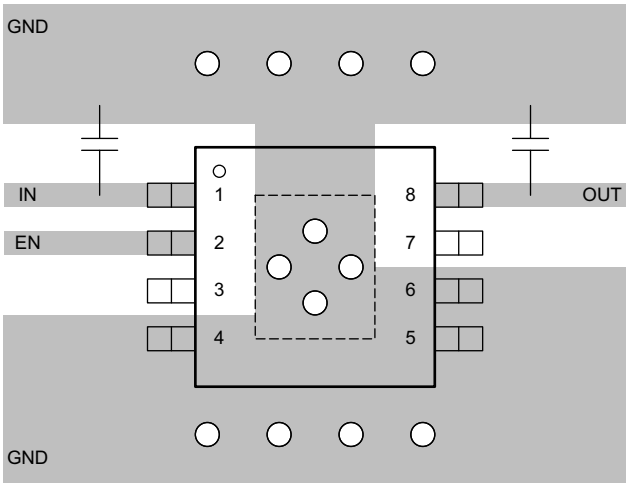

Figure 7-9. TPSB81-Q1 Example Layout Diagram

8 Device and Documentation Support

8.1 Device Support

8.1.1 Device Nomenclature

Table 8-1. Available Options

PRODUCT[1]	DESCRIPTION
TPS7B81**xx**Q**(W)yyyz**Q1	**xx** is the nominal output voltage (for example, 50 = 5.0V, 33 = 3.3V). **Q** indicates that this device is a grade-1 device in accordance with the AEC-Q100 standard. **yyy** is the package designator. **z** is the reel quantity. **Q1** indicates that this device is an automotive grade (AEC-Q100) device.

(1) For the most current package and ordering information see the Package Option Addendum at the end of this document, or see the TI website at www.ti.com.

8.2 Receiving Notification of Documentation Updates

To receive notification of documentation updates, navigate to the device product folder on ti.com. Click on *Notifications* to register and receive a weekly digest of any product information that has changed. For change details, review the revision history included in any revised document.

8.3 Support Resources

TI E2E™ support forums are an engineer's go-to source for fast, verified answers and design help — straight from the experts. Search existing answers or ask your own question to get the quick design help you need.

Linked content is provided "AS IS" by the respective contributors. They do not constitute TI specifications and do not necessarily reflect TI's views; see TI's Terms of Use.

8.4 Trademarks

PowerPAD™ and TI E2E™ are trademarks of Texas Instruments.
All trademarks are the property of their respective owners.

8.5 Electrostatic Discharge Caution



This integrated circuit can be damaged by ESD. Texas Instruments recommends that all integrated circuits be handled with appropriate precautions. Failure to observe proper handling and installation procedures can cause damage.

ESD damage can range from subtle performance degradation to complete device failure. Precision integrated circuits may be more susceptible to damage because very small parametric changes could cause the device not to meet its published specifications.

8.6 Glossary

TI Glossary — This glossary lists and explains terms, acronyms, and definitions.

9 Revision History

NOTE: Page numbers for previous revisions may differ from page numbers in the current version.

Changes from Revision E (June 2025) to Revision F (September 2025)	Page
• Added WSON with wettable flanks (DRV) package to document	1
• Added *Device Nomenclature* section	20

Changes from Revision D (June 2020) to Revision E (June 2025)	Page
• Added functional safety bullets to *Features* section	1
• Changed power FET from NMOS to PMOS in *Functional Block Diagram*	11

Copyright © 2025 Texas Instruments Incorporated

10 Mechanical, Packaging, and Orderable Information

The following pages include mechanical, packaging, and orderable information. This information is the most current data available for the designated devices. This data is subject to change without notice and revision of this document. For browser-based versions of this data sheet, refer to the left-hand navigation.

Copyright © 2025 Texas Instruments Incorporated

PACKAGING INFORMATION

Orderable part number	Status (1)	Material type (2)	Package | Pins	Package qty | Carrier	RoHS (3)	Lead finish/ Ball material (4)	MSL rating/ Peak reflow (5)	Op temp (°C)	Part marking (6)
TPS7B8125QDGNRQ1	Active	Production	HVSSOP (DGN) | 8	2500 | LARGE T&R	Yes	NIPDAUAG	Level-2-260C-1 YEAR	-40 to 150	26GX
TPS7B8125QDGNRQ1.A	Active	Production	HVSSOP (DGN) | 8	2500 | LARGE T&R	Yes	NIPDAUAG	Level-2-260C-1 YEAR	-40 to 150	26GX
TPS7B8133QDGNRQ1	Active	Production	HVSSOP (DGN) | 8	2500 | LARGE T&R	Yes	NIPDAUAG	Level-2-260C-1 YEAR	-40 to 150	1VTX
TPS7B8133QDGNRQ1.A	Active	Production	HVSSOP (DGN) | 8	2500 | LARGE T&R	Yes	NIPDAUAG	Level-2-260C-1 YEAR	-40 to 150	1VTX
TPS7B8133QDRVRQ1	Active	Production	WSON (DRV) | 6	3000 | LARGE T&R	Yes	NIPDAU	Level-2-260C-1 YEAR	-40 to 150	1X2H
TPS7B8133QDRVRQ1.A	Active	Production	WSON (DRV) | 6	3000 | LARGE T&R	Yes	NIPDAU	Level-2-260C-1 YEAR	-40 to 150	1X2H
TPS7B8133QKVURQ1	Active	Production	TO-252 (KVU) | 5	2500 | LARGE T&R	Yes	SN	Level-3-260C-168 HR	-40 to 150	7B8133Q1
TPS7B8133QKVURQ1.A	Active	Production	TO-252 (KVU) | 5	2500 | LARGE T&R	Yes	SN	Level-3-260C-168 HR	-40 to 150	7B8133Q1
TPS7B8133QWDRVRQ1	Active	Production	WSON (DRV) | 6	3000 | LARGE T&R	Yes	SN	Level-1-260C-UNLIM	-40 to 150	3NGH
TPS7B8150QDGNRQ1	Active	Production	HVSSOP (DGN) | 8	2500 | LARGE T&R	Yes	NIPDAUAG	Level-2-260C-1 YEAR	-40 to 150	1VUX
TPS7B8150QDGNRQ1.A	Active	Production	HVSSOP (DGN) | 8	2500 | LARGE T&R	Yes	NIPDAUAG	Level-2-260C-1 YEAR	-40 to 150	1VUX
TPS7B8150QDRVRQ1	Active	Production	WSON (DRV) | 6	3000 | LARGE T&R	Yes	NIPDAU	Level-2-260C-1 YEAR	-40 to 150	1WNH
TPS7B8150QDRVRQ1.A	Active	Production	WSON (DRV) | 6	3000 | LARGE T&R	Yes	NIPDAU	Level-2-260C-1 YEAR	-40 to 150	1WNH
TPS7B8150QKVURQ1	Active	Production	TO-252 (KVU) | 5	2500 | LARGE T&R	Yes	SN	Level-3-260C-168 HR	-40 to 150	7B8150Q1
TPS7B8150QKVURQ1.A	Active	Production	TO-252 (KVU) | 5	2500 | LARGE T&R	Yes	SN	Level-3-260C-168 HR	-40 to 150	7B8150Q1
TPS7B8150QWDRVRQ1	Active	Production	WSON (DRV) | 6	3000 | LARGE T&R	Yes	SN	Level-1-260C-UNLIM	-40 to 150	3NHH

(1) **Status:** For more details on status, see our product life cycle.

(2) **Material type:** When designated, preproduction parts are prototypes/experimental devices, and are not yet approved or released for full production. Testing and final process, including without limitation quality assurance, reliability performance testing, and/or process qualification, may not yet be complete, and this item is subject to further changes or possible discontinuation. If available for ordering, purchases will be subject to an additional waiver at checkout, and are intended for early internal evaluation purposes only. These items are sold without warranties of any kind.

(3) **RoHS values:** Yes, No, RoHS Exempt. See the TI RoHS Statement for additional information and value definition.

(4) **Lead finish/Ball material:** Parts may have multiple material finish options. Finish options are separated by a vertical ruled line. Lead finish/Ball material values may wrap to two lines if the finish value exceeds the maximum column width.

(5) **MSL rating/Peak reflow:** The moisture sensitivity level ratings and peak solder (reflow) temperatures. In the event that a part has multiple moisture sensitivity ratings, only the lowest level per JEDEC standards is shown. Refer to the shipping label for the actual reflow temperature that will be used to mount the part to the printed circuit board.

(6) **Part marking:** There may be an additional marking, which relates to the logo, the lot trace code information, or the environmental category of the part.

Multiple part markings will be inside parentheses. Only one part marking contained in parentheses and separated by a "~" will appear on a part. If a line is indented then it is a continuation of the previous line and the two combined represent the entire part marking for that device.

Important Information and Disclaimer: The information provided on this page represents TI's knowledge and belief as of the date that it is provided. TI bases its knowledge and belief on information provided by third parties, and makes no representation or warranty as to the accuracy of such information. Efforts are underway to better integrate information from third parties. TI has taken and continues to take reasonable steps to provide representative and accurate information but may not have conducted destructive testing or chemical analysis on incoming materials and chemicals. TI and TI suppliers consider certain information to be proprietary, and thus CAS numbers and other limited information may not be available for release.

In no event shall TI's liability arising out of such information exceed the total purchase price of the TI part(s) at issue in this document sold by TI to Customer on an annual basis.

OTHER QUALIFIED VERSIONS OF TPS7B81-Q1 :

- Catalog : TPS7B81

NOTE: Qualified Version Definitions:

- Catalog - TI's standard catalog product

TAPE AND REEL INFORMATION

REEL DIMENSIONS

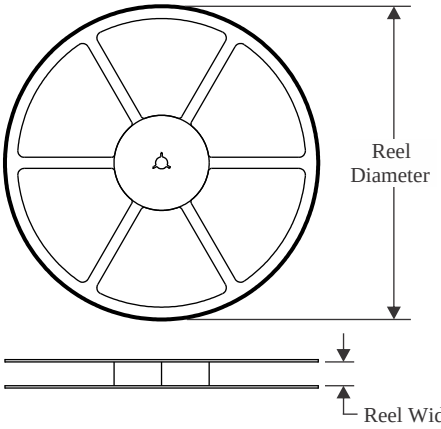

TAPE DIMENSIONS

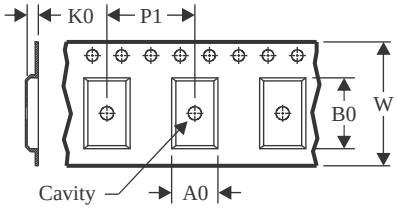

A0	Dimension designed to accommodate the component width
B0	Dimension designed to accommodate the component length
K0	Dimension designed to accommodate the component thickness
W	Overall width of the carrier tape
P1	Pitch between successive cavity centers

QUADRANT ASSIGNMENTS FOR PIN 1 ORIENTATION IN TAPE

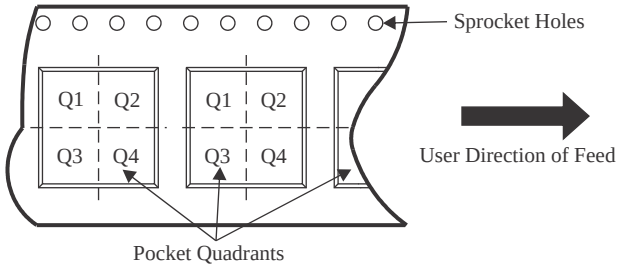

*All dimensions are nominal

Device	Package Type	Package Drawing	Pins	SPQ	Reel Diameter (mm)	Reel Width W1 (mm)	A0 (mm)	B0 (mm)	K0 (mm)	P1 (mm)	W (mm)	Pin1 Quadrant
TPS7B8125QDGNRQ1	HVSSOP	DGN	8	2500	330.0	12.4	5.3	3.4	1.4	8.0	12.0	Q1
TPS7B8133QDGNRQ1	HVSSOP	DGN	8	2500	330.0	12.4	5.3	3.4	1.4	8.0	12.0	Q1
TPS7B8133QDRVRQ1	WSON	DRV	6	3000	180.0	8.4	2.3	2.3	1.15	4.0	8.0	Q2
TPS7B8133QKVURQ1	TO-252	KVU	5	2500	330.0	16.4	6.9	10.5	2.7	8.0	16.0	Q2
TPS7B8133QWDRVRQ1	WSON	DRV	6	3000	180.0	8.4	2.3	2.3	1.15	4.0	8.0	Q2
TPS7B8150QDGNRQ1	HVSSOP	DGN	8	2500	330.0	12.4	5.3	3.4	1.4	8.0	12.0	Q1
TPS7B8150QDRVRQ1	WSON	DRV	6	3000	180.0	8.4	2.3	2.3	1.15	4.0	8.0	Q2
TPS7B8150QKVURQ1	TO-252	KVU	5	2500	330.0	16.4	6.9	10.5	2.7	8.0	16.0	Q2
TPS7B8150QWDRVRQ1	WSON	DRV	6	3000	180.0	8.4	2.3	2.3	1.15	4.0	8.0	Q2

TAPE AND REEL BOX DIMENSIONS

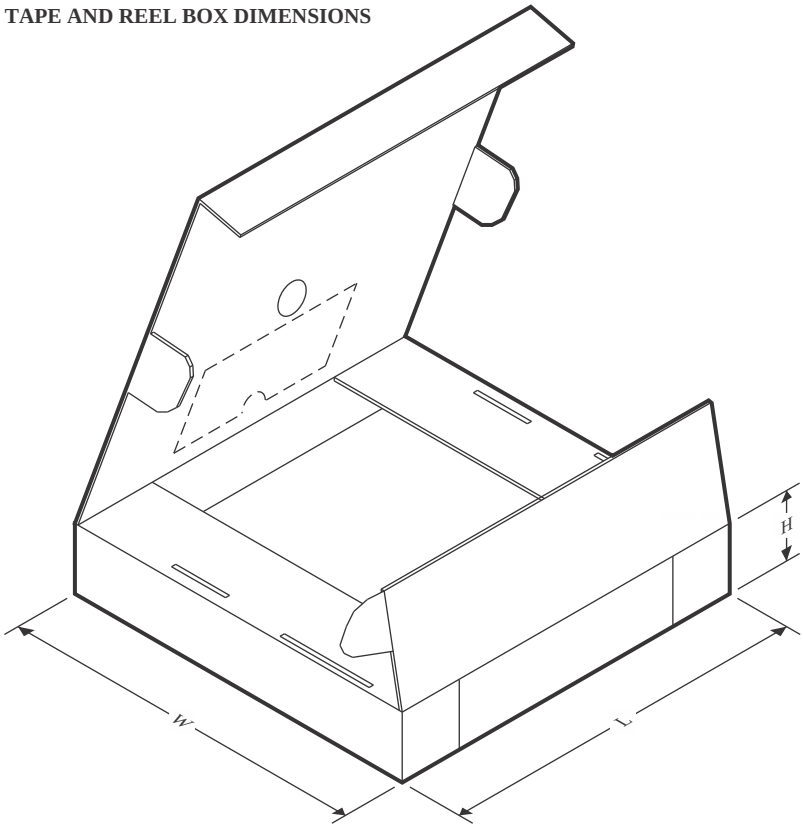

*All dimensions are nominal

Device	Package Type	Package Drawing	Pins	SPQ	Length (mm)	Width (mm)	Height (mm)
TPS7B8125QDGNRQ1	HVSSOP	DGN	8	2500	366.0	364.0	50.0
TPS7B8133QDGNRQ1	HVSSOP	DGN	8	2500	366.0	364.0	50.0
TPS7B8133QDRVRQ1	WSON	DRV	6	3000	210.0	185.0	35.0
TPS7B8133QKVURQ1	TO-252	KVU	5	2500	340.0	340.0	38.0
TPS7B8133QWDRVRQ1	WSON	DRV	6	3000	210.0	185.0	35.0
TPS7B8150QDGNRQ1	HVSSOP	DGN	8	2500	366.0	364.0	50.0
TPS7B8150QDRVRQ1	WSON	DRV	6	3000	210.0	185.0	35.0
TPS7B8150QKVURQ1	TO-252	KVU	5	2500	340.0	340.0	38.0
TPS7B8150QWDRVRQ1	WSON	DRV	6	3000	210.0	185.0	35.0

GENERIC PACKAGE VIEW

DGN 8

PowerPAD™ HVSSOP - 1.1 mm max height

3 x 3, 0.65 mm pitch

SMALL OUTLINE PACKAGE

This image is a representation of the package family, actual package may vary.
Refer to the product data sheet for package details.

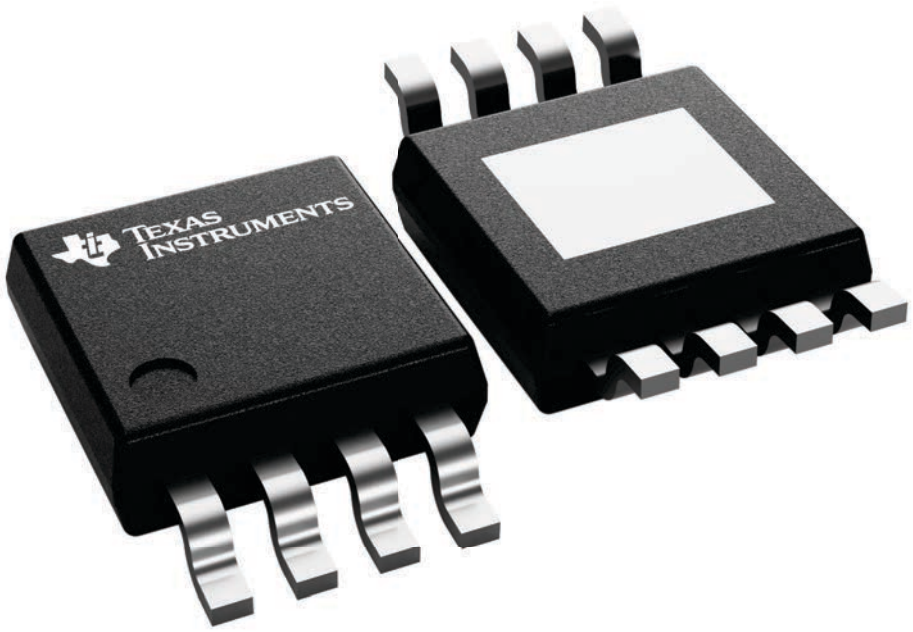

4225482/B

PACKAGE OUTLINE

DGN0008G

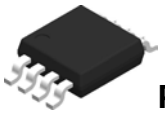

PowerPAD™ HVSSOP - 1.1 mm max height

SMALL OUTLINE PACKAGE

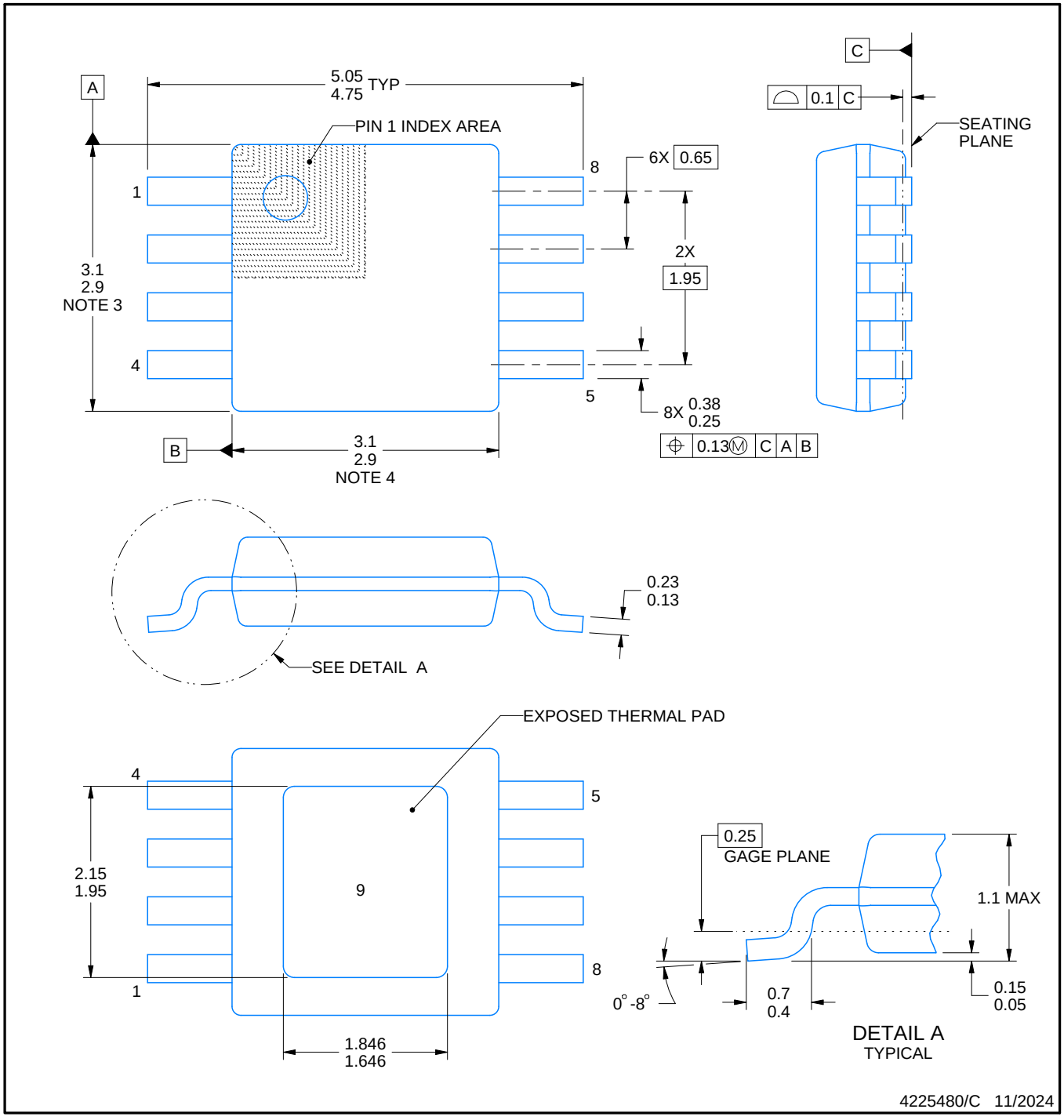

PowerPAD is a trademark of Texas Instruments.

NOTES:

1. All linear dimensions are in millimeters. Any dimensions in parenthesis are for reference only. Dimensioning and tolerancing per ASME Y14.5M.
2. This drawing is subject to change without notice.
3. This dimension does not include mold flash, protrusions, or gate burrs. Mold flash, protrusions, or gate burrs shall not exceed 0.15 mm per side.
4. This dimension does not include interlead flash. Interlead flash shall not exceed 0.25 mm per side.
5. Reference JEDEC registration MO-187.

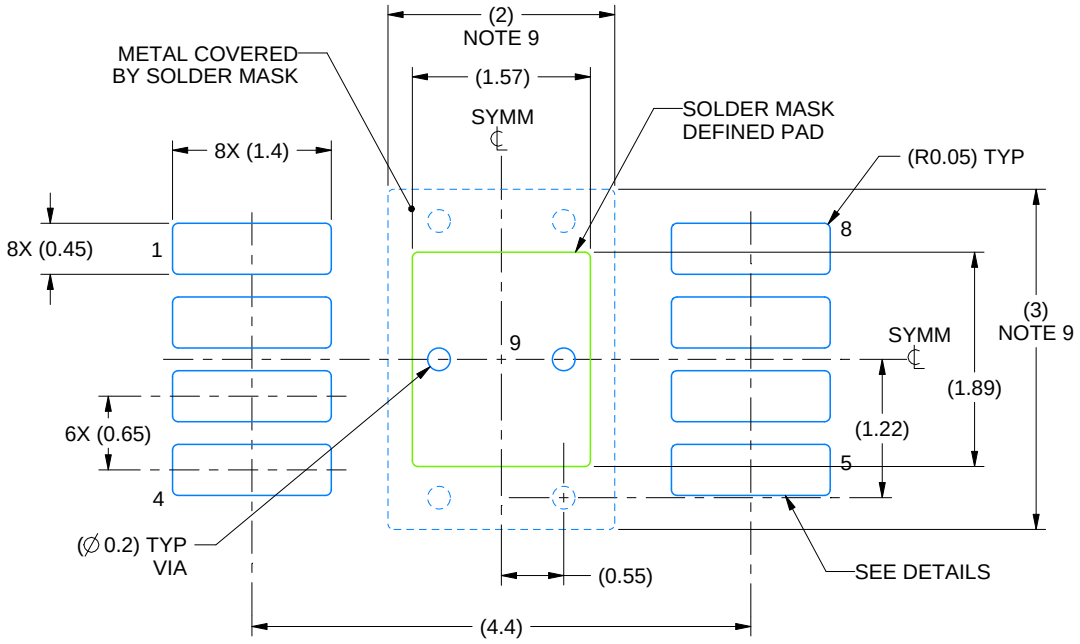

LAND PATTERN EXAMPLE
EXPOSED METAL SHOWN
SCALE: 15X

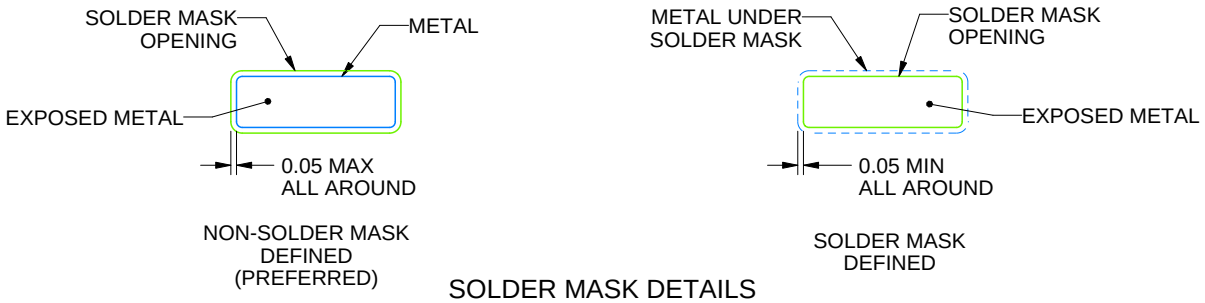

SOLDER MASK DETAILS

4225480/C 11/2024

NOTES: (continued)

6. Publication IPC-7351 may have alternate designs.
7. Solder mask tolerances between and around signal pads can vary based on board fabrication site.
8. Vias are optional depending on application, refer to device data sheet. If any vias are implemented, refer to their locations shown on this view. It is recommended that vias under paste be filled, plugged or tented.
9. Size of metal pad may vary due to creepage requirement.

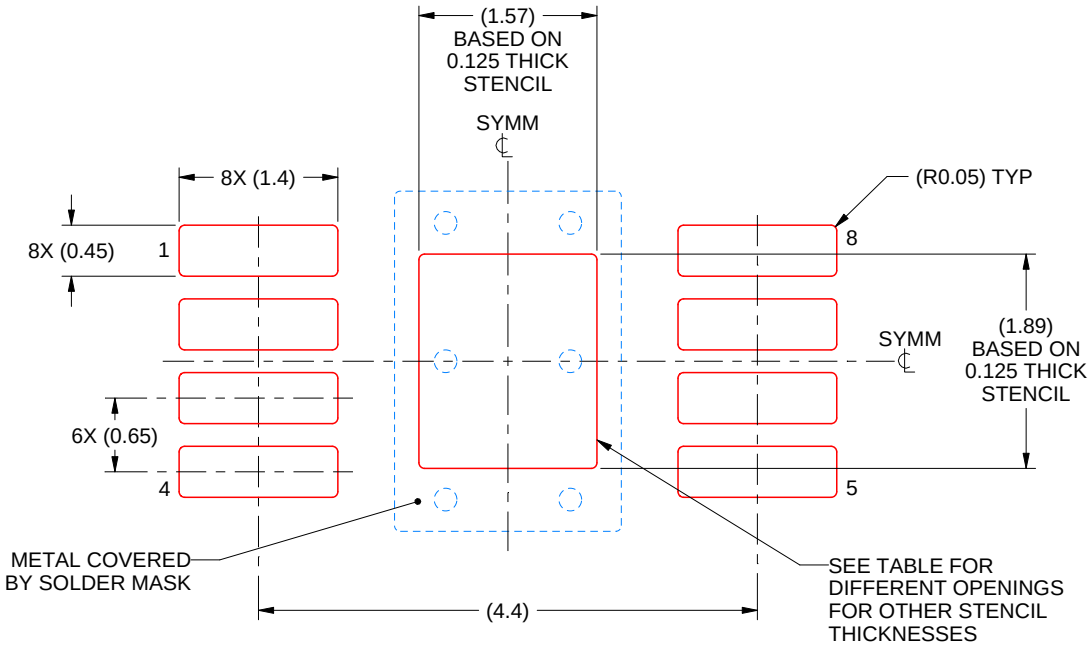

SOLDER PASTE EXAMPLE
EXPOSED PAD 9:
100% PRINTED SOLDER COVERAGE BY AREA
SCALE: 15X

STENCIL THICKNESS	SOLDER STENCIL OPENING
0.1	1.76 X 2.11
0.125	1.57 X 1.89 (SHOWN)
0.15	1.43 X 1.73
0.175	1.33 X 1.60

4225480/C 11/2024

NOTES: (continued)

10. Laser cutting apertures with trapezoidal walls and rounded corners may offer better paste release. IPC-7525 may have alternate design recommendations.
11. Board assembly site may have different recommendations for stencil design.

DRV 6 WSON - 0.8 mm max height

PLASTIC SMALL OUTLINE - NO LEAD

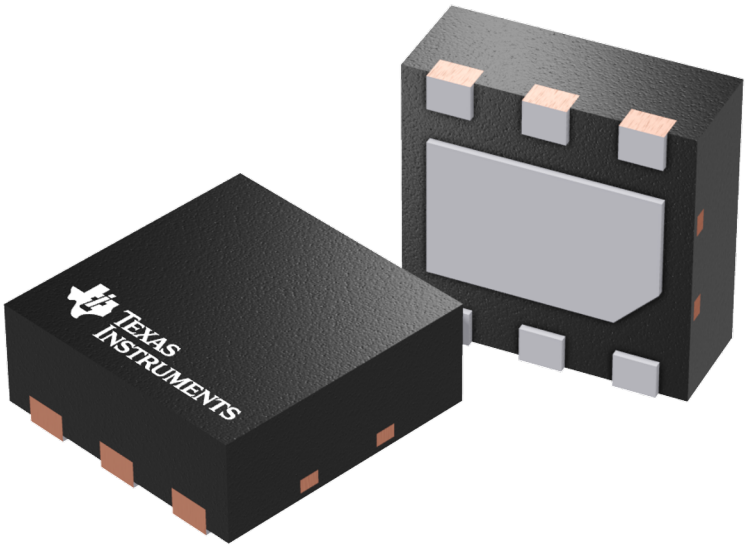

Images above are just a representation of the package family, actual package may vary.
Refer to the product data sheet for package details.

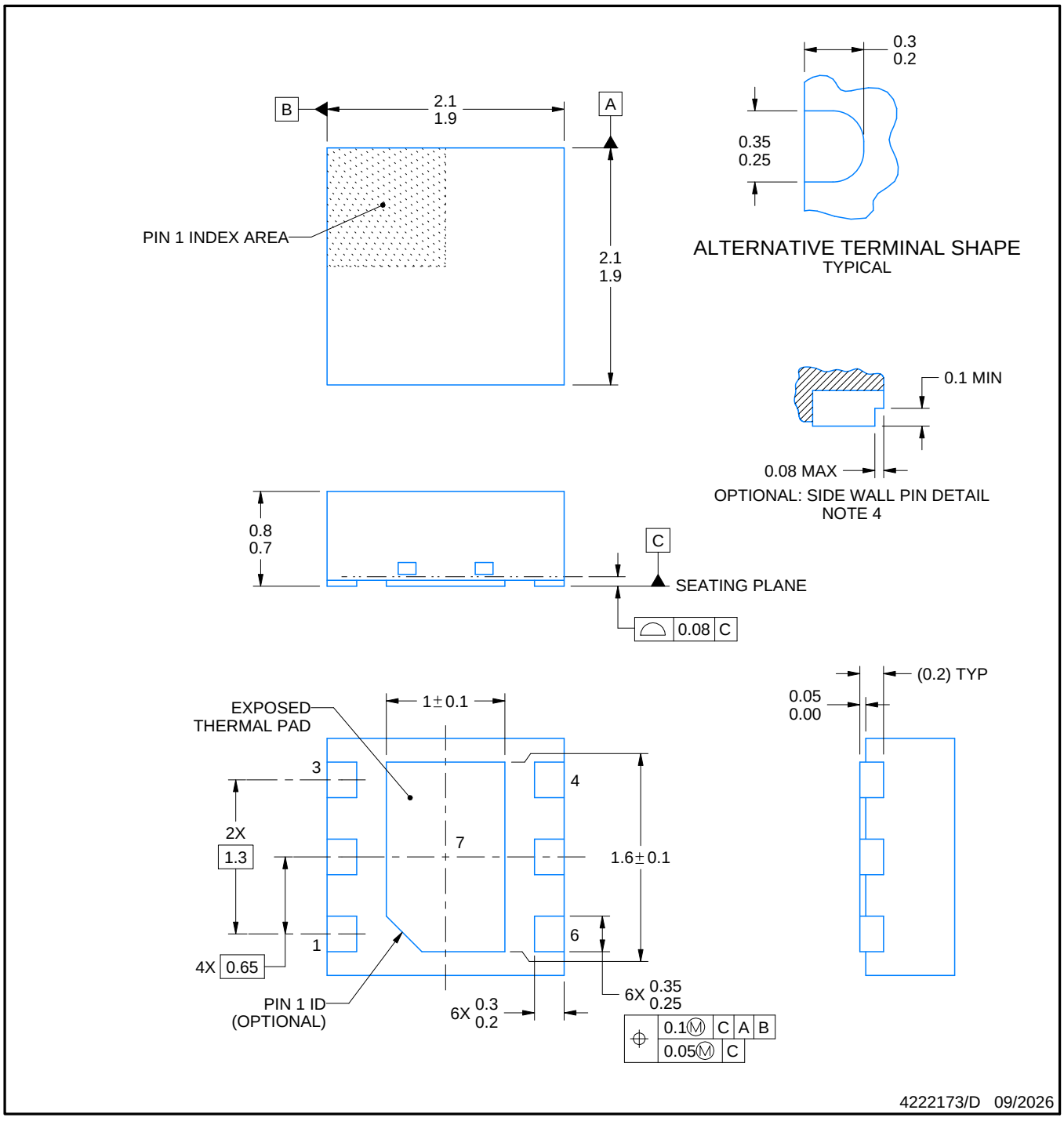

NOTES:

1. All linear dimensions are in millimeters. Any dimensions in parenthesis are for reference only. Dimensioning and tolerancing per ASME Y14.5M.
2. This drawing is subject to change without notice.
3. The package thermal pad must be soldered to the printed circuit board for thermal and mechanical performance.
4. Minimum 0.1 mm solder wetting on pin side wall. Available for wettable flank version only.

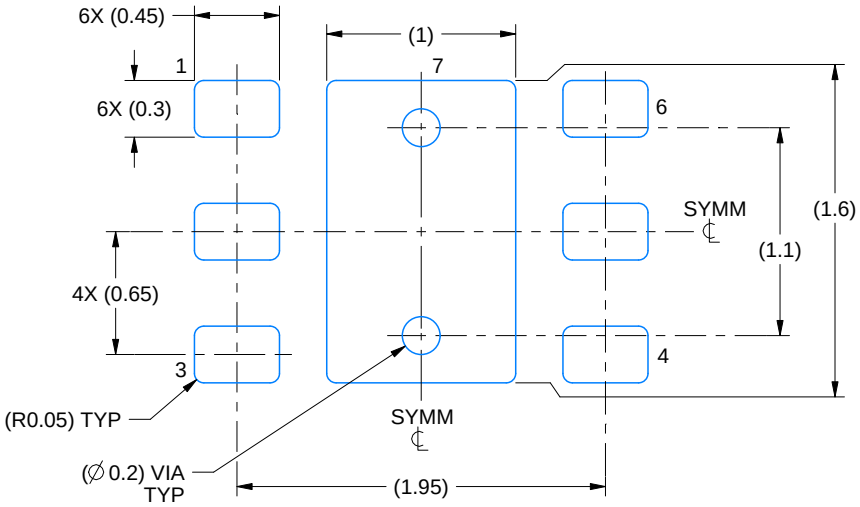

LAND PATTERN EXAMPLE
SCALE:25X

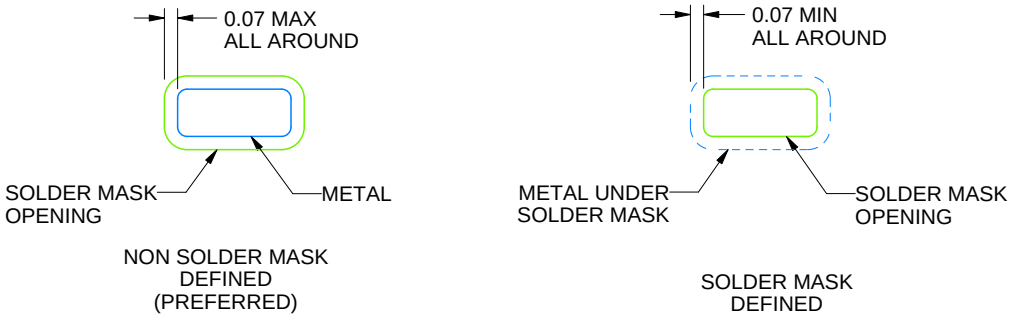

SOLDER MASK DETAILS

4222173/D 09/2026

NOTES: (continued)

5. This package is designed to be soldered to a thermal pad on the board. For more information, see Texas Instruments literature number SLUA271 (www.ti.com/lit/slua271).
6. Vias are optional depending on application, refer to device data sheet. If some or all are implemented, recommended via locations are shown.

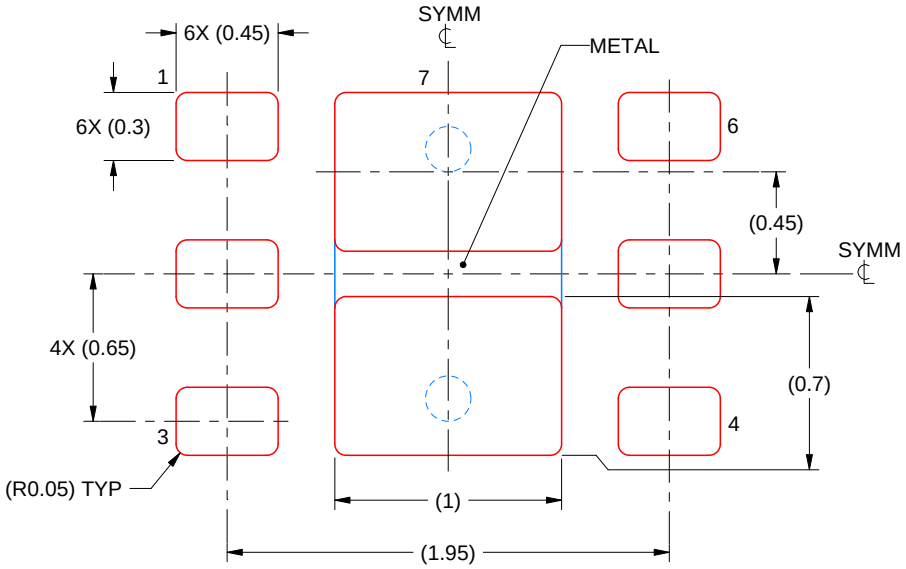

SOLDER PASTE EXAMPLE
BASED ON 0.125 mm THICK STENCIL

EXPOSED PAD #7
88% PRINTED SOLDER COVERAGE BY AREA UNDER PACKAGE
SCALE:30X

4222173/D 09/2026

NOTES: (continued)

7. Laser cutting apertures with trapezoidal walls and rounded corners may offer better paste release. IPC-7525 may have alternate design recommendations.

KVU (R–PSFM–G5) PLASTIC FLANGE–MOUNT PACKAGE

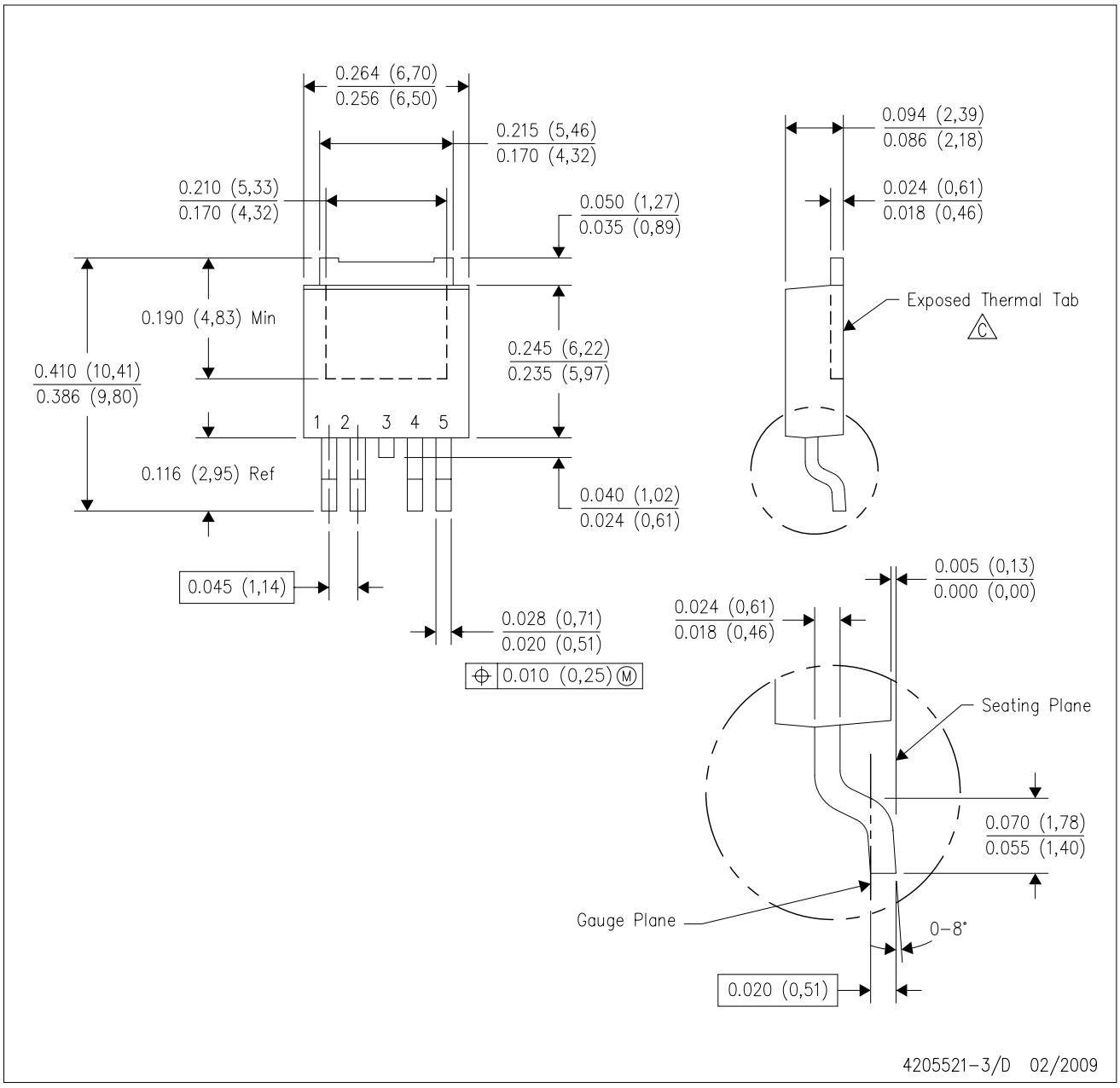

NOTES:
A. All linear dimensions are in inches (millimeters).
B. This drawing is subject to change without notice.
C. The center lead is in electrical contact with the exposed thermal tab.
D. Body Dimensions do not include mold flash or protrusions. Mold flash and protrusion shall not exceed 0.006 (0,15) per side.
E. Falls within JEDEC TO–252 variation AD.

KVU (R–PSFM–G5) PLASTIC FLANGE MOUNT PACKAGE

Example Board Layout

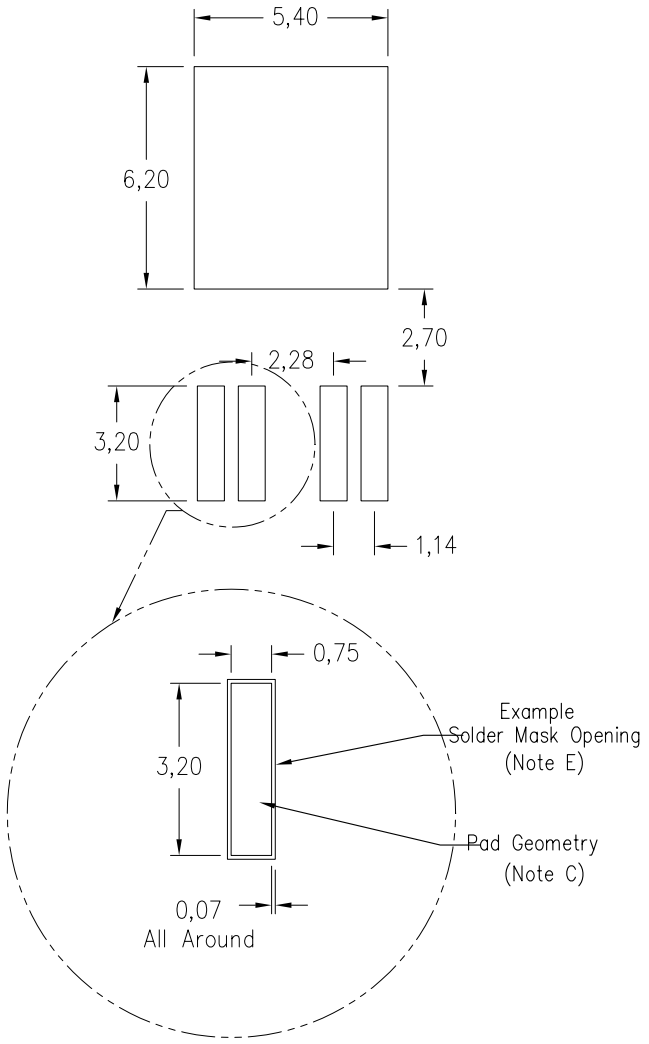

Stencil Openings
Based on a stencil thickness
of .127mm (.005inch).

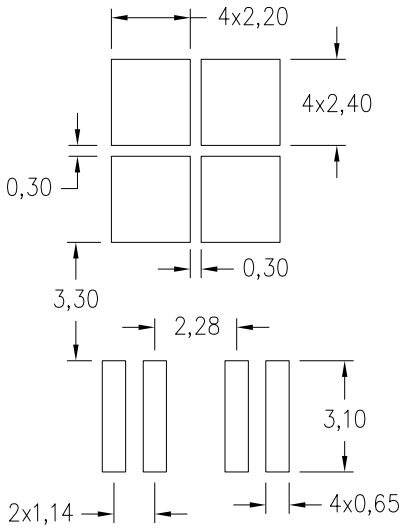

63% solder coverage on center pad

4211592–3/B 03/12

NOTES:
A. All linear dimensions are in millimeters.
B. This drawing is subject to change without notice.
C. Publication IPC–SM–782 is an alternate information source for PCB land pattern designs.
D. Laser cutting apertures with trapezoidal walls and also rounding corners will offer better paste release. Customers should contact their board assembly site for stencil design recommendations. Refer to IPC–7525 for other stencil recommendations.
E. Customers should contact their board fabrication site for recommended solder mask tolerances and via tenting recommendations for vias placed in thermal pad.

IMPORTANT NOTICE AND DISCLAIMER

TI PROVIDES TECHNICAL AND RELIABILITY DATA (INCLUDING DATASHEETS), DESIGN RESOURCES (INCLUDING REFERENCE DESIGNS), APPLICATION OR OTHER DESIGN ADVICE, WEB TOOLS, SAFETY INFORMATION, AND OTHER RESOURCES “AS IS” AND WITH ALL FAULTS, AND DISCLAIMS ALL WARRANTIES, EXPRESS AND IMPLIED, INCLUDING WITHOUT LIMITATION ANY IMPLIED WARRANTIES OF MERCHANTABILITY, FITNESS FOR A PARTICULAR PURPOSE OR NON-INFRINGEMENT OF THIRD PARTY INTELLECTUAL PROPERTY RIGHTS.

These resources are intended for skilled developers designing with TI products. You are solely responsible for (1) selecting the appropriate TI products for your application, (2) designing, validating and testing your application, and (3) ensuring your application meets applicable standards, and any other safety, security, regulatory or other requirements.

These resources are subject to change without notice. TI grants you permission to use these resources only for development of an application that uses the TI products described in the resource. Other reproduction and display of these resources is prohibited. No license is granted to any other TI intellectual property right or to any third party intellectual property right. TI disclaims responsibility for, and you fully indemnify TI and its representatives against any claims, damages, costs, losses, and liabilities arising out of your use of these resources.

TI’s products are provided subject to TI’s Terms of Sale, TI’s General Quality Guidelines, or other applicable terms available either on ti.com or provided in conjunction with such TI products. TI’s provision of these resources does not expand or otherwise alter TI’s applicable warranties or warranty disclaimers for TI products. Unless TI explicitly designates a product as custom or customer-specified, TI products are standard, catalog, general purpose devices.

TI objects to and rejects any additional or different terms you may propose.

Copyright © 2026, Texas Instruments Incorporated

Last updated 10/2025