TPS92612 40-V, 150-mA Single-Channel Linear LED Driver and Constant-Current Source With Protection

1 Features

- Single-channel high-precision current source:
  - ±4.6% Current accuracy from –40°C to +125°C
  - Current adjustable by external sense resistor
  - Up to 150 mA maximum current
- Wide input-voltage range: 4.5 V – 40 V
- Brightness control by input PWM duty cycle
- Low dropout voltage (current-sense voltage drop included)
  - Maximum dropout: 150 mV at 10 mA
  - Maximum dropout: 400 mV at 70 mA
  - Maximum dropout: 700 mV at 150 mA
- Low quiescent current: typical 200 µA
- Protection:
  - LED short-circuit protection with auto-recovery
  - Thermal shutdown
- Support heat sharing with external resistor
- Operating junction temperature range: –40°C to +150°C

2 Applications

- LED driver, constant current source, or current limiter for:
  - Washer and dryer
  - Refrigerator and freezer
  - Gas detector
  - Factory automation and control
  - Building automation
  - Medical

3 Description

With LEDs being widely used as a light source, simple LED drivers are more and more popular. Compared to discrete solutions, a low-cost monolithic solution lowers system-level component counts and significantly improves current accuracy and reliability.

The TPS92612 device is a single-channel high-side linear LED driver operating from a wide range supply. It is a simple, yet elegant solution to deliver constant current for a single LED string. It can support off-board LED connection with long cables. The TPS92612 device can also be used as a general constant current source or current limiter in other applications.

Device Information(1)

PART NUMBER	PACKAGE	BODY SIZE (NOM)
TPS92612	SOT-23 (5)	2.9 mm × 1.6 mm

(1) For all available packages, see the orderable addendum at the end of the data sheet.

Typical Application Diagram

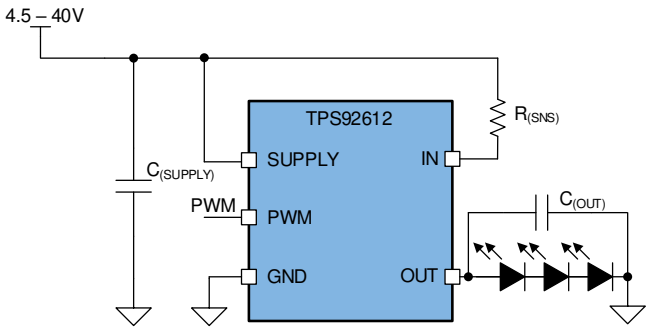

An IMPORTANT NOTICE at the end of this data sheet addresses availability, warranty, changes, use in safety-critical applications, intellectual property matters and other important disclaimers. PRODUCTION DATA.

Table of Contents

1 Features ... 1
2 Applications ... 1
3 Description ... 1
4 Revision History ... 2
5 Pin Configuration and Functions ... 3
6 Specifications ... 3
6.1 Absolute Maximum Ratings ... 3
6.2 ESD Ratings ... 3
6.3 Recommended Operating Conditions ... 4
6.4 Thermal Information ... 4
6.5 Electrical Characteristics ... 4
6.6 Timing Requirements ... 4
6.7 Typical Characteristics ... 5
7 Detailed Description ... 8
7.1 Overview ... 8
7.2 Functional Block Diagram ... 8
7.3 Feature Description ... 8
7.4 Device Functional Modes ... 9
8 Application and Implementation ... 10
8.1 Application Information ... 10
8.2 Typical Application ... 10
9 Power Supply Recommendations ... 14
10 Layout ... 15
10.1 Layout Guidelines ... 15
10.2 Layout Example ... 15
11 Device and Documentation Support ... 16
11.1 Receiving Notification of Documentation Updates 16
11.2 Support Resources ... 16
11.3 Trademarks ... 16
11.4 Electrostatic Discharge Caution ... 16
11.5 Glossary ... 16
12 Mechanical, Packaging, and Orderable Information ... 16

4 Revision History

DATE	REVISION	NOTES
April 2020	*	Initial release.

Copyright © 2020, Texas Instruments Incorporated

5 Pin Configuration and Functions

TPS92612 DBV Package
5-Pin SOT-23
Top View

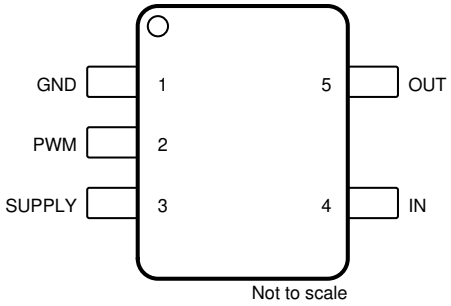

Not to scale

Pin Functions

PIN		I/O	DESCRIPTION
NAME	NO.		
	TPS92612		
GND	1	—	Ground
IN	4	I	Current input
OUT	5	O	Constant-current output
PWM	2	I	PWM input
SUPPLY	3	I	Device supply voltage

6 Specifications

6.1 Absolute Maximum Ratings

over operating ambient temperature range (unless otherwise noted)(1)

		MIN	MAX	UNIT
High-voltage input	IN, PWM, SUPPLY	–0.3	45	V
High-voltage output	OUT	–0.3	45	V
IN to OUT	$V_{(IN)} – V_{(OUT)}$	–0.3	45	V
SUPPLY to IN	$V_{(SUPPLY)} – V_{(IN)}$	–0.3	1	V
Operating junction temperature, T_J		–40	150	°C
Storage temperature, T_{stg}		–40	150	°C

(1) Stresses beyond those listed under *Absolute Maximum Ratings* may cause permanent damage to the device. These are stress ratings only, which do not imply functional operation of the device at these or any other conditions beyond those indicated under *Recommended Operating Conditions*. Exposure to absolute-maximum-rated conditions for extended periods may affect device reliability.

6.2 ESD Ratings

				VALUE	UNIT
$V_{(ESD)}$	Electrostatic discharge	Human-body model (HBM), per ANSI/ESDA/JEDEC JS-001(1)	All pins	±2000	V
		Charged-device model (CDM), per JEDEC specification JESD22-C101(2)	All pins	±500	
			Corner pins (3, 4, and 5)	±750	

(1) JEDEC document JEP155 states that 500-V HBM allows safemanufacturing with a standard ESD control process.
(2) JEDEC document JEP157 states that 250-V CDM allows safemanufacturing with a standard ESD control process.

Copyright © 2020, Texas Instruments Incorporated

6.3 Recommended Operating Conditions

over operating ambient temperature range (unless otherwise noted)

		MIN	NOM	MAX	UNIT
SUPPLY	Device supply voltage	4.5		40	V
IN	Sense voltage	4.4		40	V
PWM	PWM inputs	0		40	V
OUT	Driver output	0		40	V
Operating ambient temperature, T_A		–40		125	°C

6.4 Thermal Information

THERMAL METRIC		TPS92612 DBV (SOT23) 5 PINS	UNIT
$R_{\theta JA}$	Junction-to-ambient thermal resistance	200.7	°C/W
$R_{\theta JC(top)}$	Junction-to-case (top) thermal resistance	104.4	°C/W
$R_{\theta JB}$	Junction-to-board thermal resistance	45.6	°C/W
ψ_{JT}	Junction-to-top characterization parameter	17.5	°C/W
ψ_{JB}	Junction-to-board characterization parameter	45.2	°C/W

6.5 Electrical Characteristics

$V_{(SUPPLY)}$ = 5 V to 40 V, T_J = –40°C to +150°C unless otherwise noted

PARAMETER		TEST CONDITIONS	MIN	TYP	MAX	UNIT
BIAS						
$V_{(POR_rising)}$	Supply voltage POR rising threshold			3.2	4	V
$V_{(POR_falling)}$	Supply voltage POR falling threshold		2.2	3		V
$I_{(Quiescent)}$	Device standby current	PWM = HIGH	0.1	0.2	0.25	mA
LOGIC INPUTS (PWM)						
$V_{IL(PWM)}$	Input logic-low voltage, PWM		1.045	1.1	1.155	V
$V_{IH(PWM)}$	Input logic-high voltage, PWM		1.16	1.2	1.24	V
CONSTANT-CURRENT DRIVER						
$I_{(OUT)}$	Device output-current range	100% duty cycle	4		150	mA
$V_{(CS_REG)}$	Sense-resistor regulation voltage	T_A = 25°C, $V_{(SUPPLY)}$ = 4.5 V to 18 V	94	98	102	mV
		T_A = –40°C to +125°C, $V_{(SUPPLY)}$ = 4.5 V to 18 V	93.5	98	102.5	
$R_{(CS_REG)}$	Sense-resistor value		0.66		24.5	Ω
$V_{(DROPOUT)}$	Voltage dropout from SUPPLY to OUT	$V_{(CS_REG)}$ voltage included, current setting of 10 mA		120	150	mV
		$V_{(CS_REG)}$ voltage included, current setting of 70 mA		250	400	
		$V_{(CS_REG)}$ voltage included, current setting of 150 mA		430	700	
DIAGNOSTICS						
$V_{(SG_th_rising)}$	Channel output $V_{(OUT)}$ short-to-ground rising threshold		1.14	1.2	1.26	V
$V_{(SG_th_falling)}$	Channel output $V_{(OUT)}$ short-to-ground falling threshold		0.82	0.865	0.91	V
$I_{(Retry)}$	Channel output $V_{(OUT)}$ short-to-ground retry current		0.64	1.08	1.528	mA
THERMAL PROTECTION						
$T_{(TSD)}$	Thermal shutdown junction temperature threshold		157	172	187	°C
$T_{(TSD_HYS)}$	Thermal shutdown junction temperature hysteresis			15		°C

6.6 Timing Requirements

		MIN	NOM	MAX	UNIT
$t_{(PWM_delay_rising)}$	PWM rising edge delay, 50% PWM voltage to 10% of output current closed loop, t2 - t1 as shown in Figure 1	10	17	25	µs

Copyright © 2020, Texas Instruments Incorporated

Timing Requirements (continued)

		MIN	NOM	MAX	UNIT
$t_{(PWM_delay_falling)}$	PWM falling edge delay, 50% PWM voltage to 90% of output current open loop, t5 - t4 as shown in Figure 1	15	21	30	µs
$t_{(DEVICE_STARTUP)}$	SUPPLY rising edge to 10% output current at 50-mA set current, t8 - t7 as shown in Figure 1		100	150	µs
$t_{(SG_deg)}$	Output short-to-ground detection deglitch time	80	125	175	µs
$t_{(TSD_deg)}$	Thermal over temperature deglitch timer		50		µs
$t_{(Recover_deg)}$	Fault recovery deglitch timer	8.5	16	25	µs

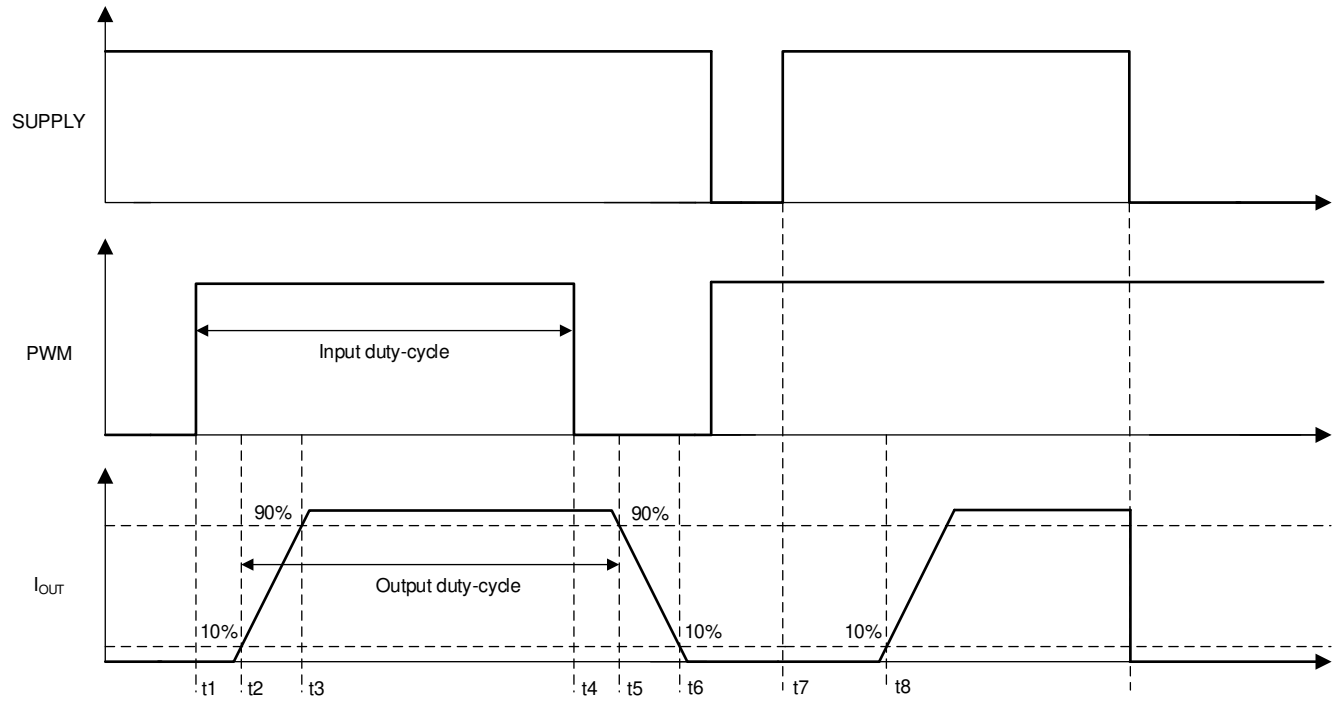

Figure 1. Output Timing Diagram

6.7 Typical Characteristics

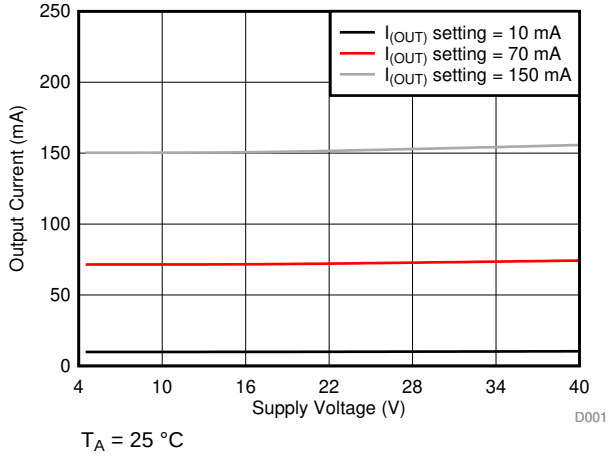

Figure 2. Output Current vs Supply Voltage

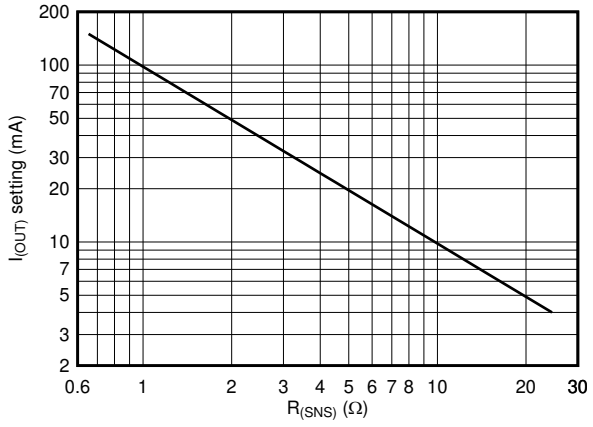

Figure 3. Output Current vs Current-Sense Resistor

Copyright © 2020, Texas Instruments Incorporated

Typical Characteristics (continued)

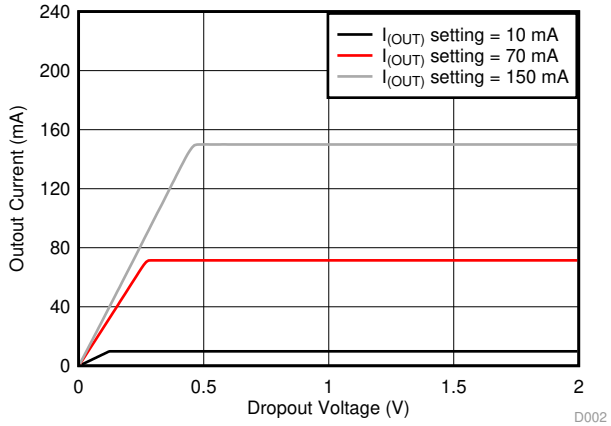

T_A = 25 °C

Figure 4. Output Current vs Dropout Voltage

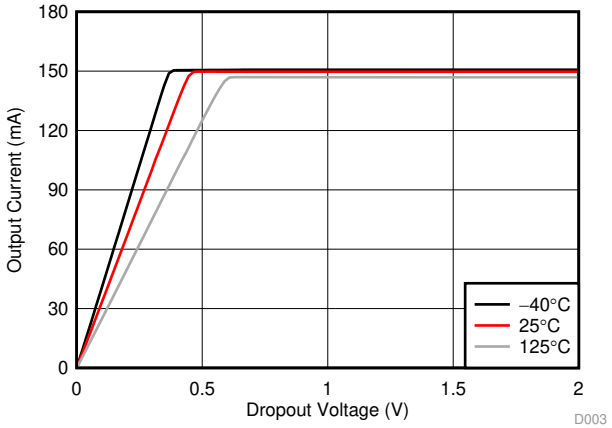

$I_{(OUT)}$ setting = 150 mA

Figure 5. Output Current vs Dropout Voltage

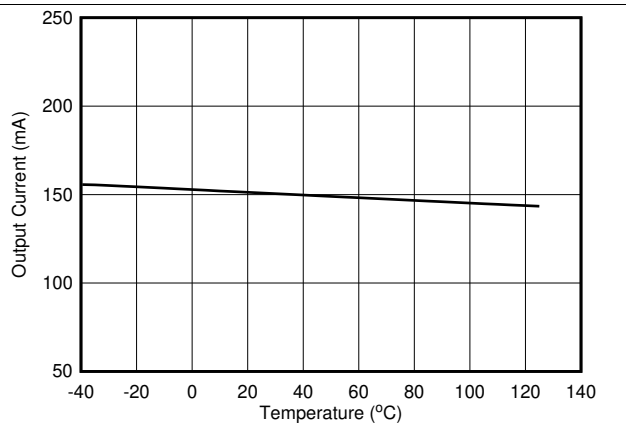

$I_{(OUT)}$ setting = 150 mA

$V_{(SUPPLY)}$-$V_{(OUT)}$ = 2 V

Figure 6. Output Current vs Temperature

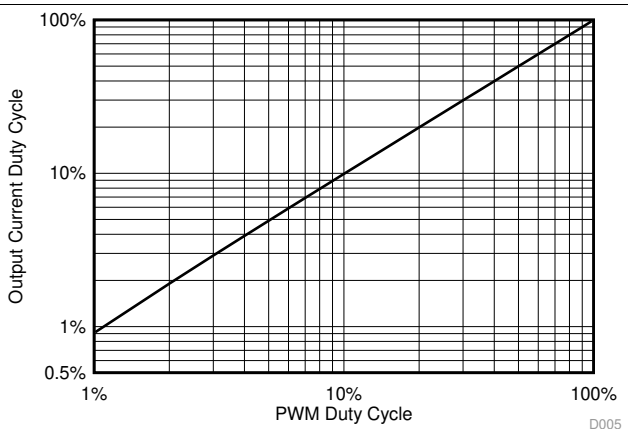

$f_{(PWM)}$ = 200 Hz

Figure 7. PWM Output Duty Cycle vs Input Duty Cycle

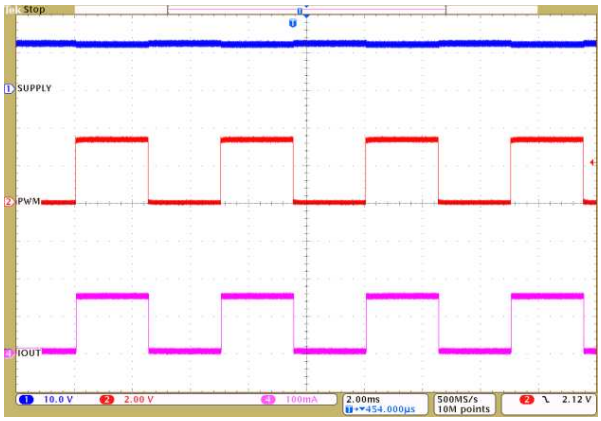

Ch. 1 = SUPPLY

Ch. 2 = $V_{(PWM)}$

Ch. 4 = $I_{(OUT)}$

$f_{(PWM)}$ = 200 Hz

Duty-cycle = 50%

Figure 8. PWM Dimming at 200 Hz

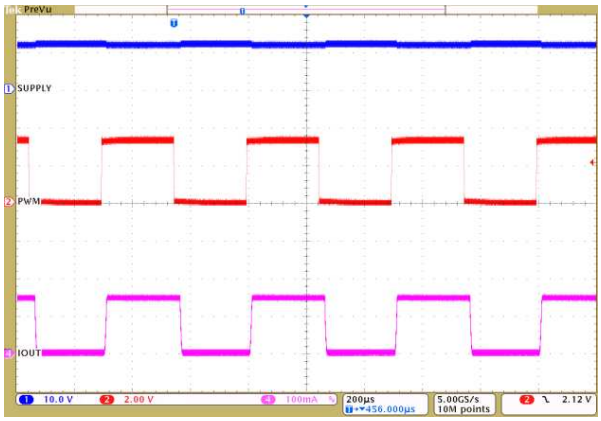

Ch. 1 = SUPPLY

Ch. 2 = $V_{(PWM)}$

Ch. 4 = $I_{(OUT)}$

$f_{(PWM)}$ = 2 kHz

Duty-cycle = 50%

Figure 9. PWM Dimming at 2 kHz

Copyright © 2020, Texas Instruments Incorporated

Typical Characteristics (continued)

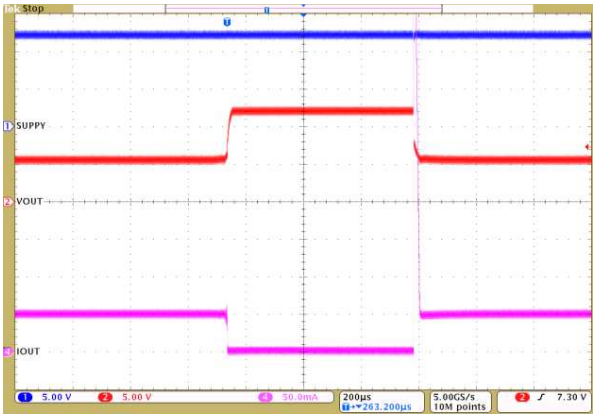

Ch. 1 = SUPPLY Ch. 2 = $V_{(OUT)}$ Ch. 4 = $I_{(OUT)}$

Figure 10. LED Open-Circuit and Recovery



Ch. 1 = SUPPLY Ch. 2 = $V_{(OUT)}$ Ch. 4 = $I_{(OUT)}$

Figure 11. LED Short-Circuit Protection and Recovery

Copyright © 2020, Texas Instruments Incorporated

7 Detailed Description

7.1 Overview

The TPS92612 device is a single-channel linear LED driver providing a simple current source with protection.

The output current at OUT pin can be set by an external $R_{(SNS)}$ resistor. Current flows from the supply through the $R_{(SNS)}$ resistor into the integrated current regulation circuit and to the output through OUT pin. Brightness can be controlled by PWM pin.

7.2 Functional Block Diagram

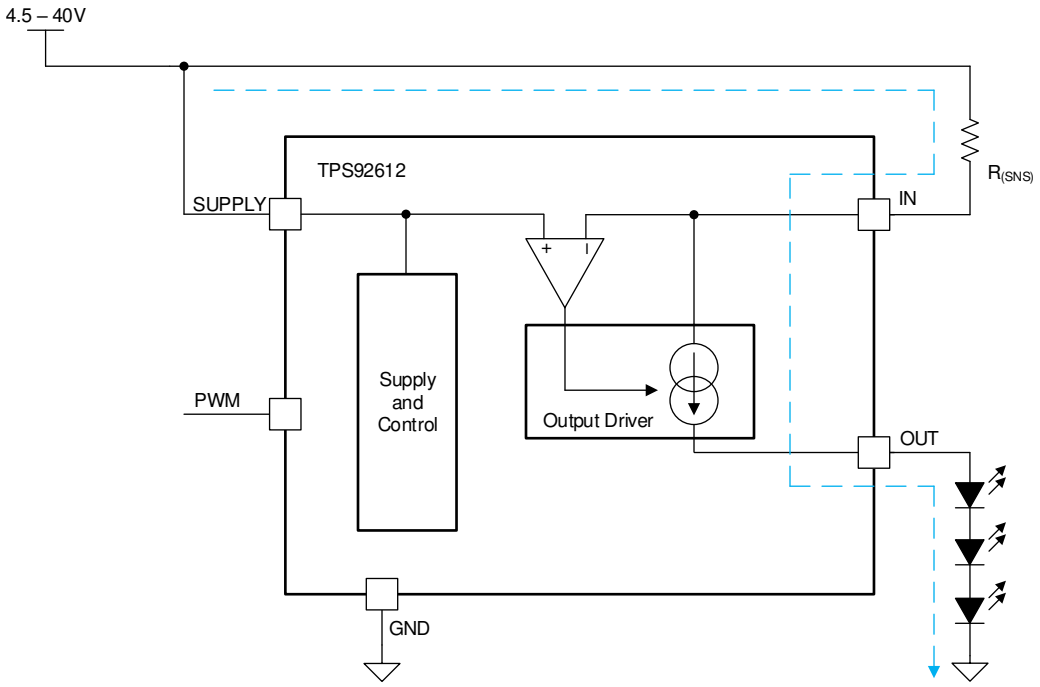

7.3 Feature Description

7.3.1 Device Bias

7.3.1.1 Power-On Reset (POR)

The TPS92612 device has an internal power-on-reset (POR) function. When power is applied to the SUPPLY pin, the internal POR holds the device in the reset condition until $V_{(SUPPLY)}$ reaches $V_{(POR_rising)}$.

7.3.2 Constant-Current Driver

The TPS92612 device is a high-side constant-current driver. The device controls the output current through regulating the voltage drop on an external high-side current-sense resistor, $R_{(SNS)}$. An integrated error amplifier drives an internal power transistor to maintain the voltage drop on the current-sense resistor $R_{(SNS)}$ to $V_{(CS_REG)}$ and therefore regulates the current output to target value. When the output current is in regulation, the current value can be calculated by using Equation 1.

$$I_{(OUT)} = \frac{V_{(CS_REG)}}{R_{(SNS)}} \quad (1)$$

where

- $V_{(CS_REG)}$ = 98 mV (typical)

Copyright © 2020, Texas Instruments Incorporated

Feature Description (continued)

When the SUPPLY-to-OUT voltage difference is below the required dropout voltage, $V_{(DROPOUT)}$, at a given output current, the TPS92612 is not able to deliver enough current output as set by the value of $R_{(SNS)}$, and the voltage across the current-sense resistor $R_{(SNS)}$ is less than $V_{(CS_REG)}$.

7.3.3 PWM Control

The pulse width modulation (PWM) input of the TPS92612 functions as enable for the output current. When the voltage applied on the PWM pin is higher than $V_{IH(PWM)}$, the output current is enabled. When the voltage applied on PWM pin is lower than $V_{IL(PWM)}$, the output current is disabled. Besides output current enable and disable function, the PWM input of TPS92612 also supports adjustment of the average current for LED brightness control. TI recommends a 200 Hz – 2 kHz PWM signal for brightness control, which is out of visible frequency range of human eyes.

7.3.4 Protection

7.3.4.1 Short-to-GND Protection

The TPS92612 device has OUT short-to-GND protection. The device monitors the $V_{(OUT)}$ voltage when the output current is enabled and compares it with the internal reference voltage to detect a short-to-GND failure. If $V_{(OUT)}$ falls below $V_{(SG_th_falling)}$ longer than the deglitch time of $t_{(SG_deg)}$, the device asserts the short-to-GND fault. During the deglitching time period, if $V_{(OUT)}$ rises above $V_{(SG_th_rising)}$, the timer is reset.

Once the device has detected a short-to-GND fault, the device turns off the output channel and retries automatically by sourcing a small current $I_{(retry)}$ from IN to OUT to pull up the loads continuously, regardless of the state of the PWM input. Once auto retry detects output voltage rising above $V_{(SG_th_rising)}$, the device clears the short-to-GND fault and resumes normal operation.

7.3.4.2 Over Temperature Protection

The TPS92612 device monitors device junction temperature. When the junction temperature reaches thermal shutdown threshold $T_{(TSD)}$, the output shuts down. Once the junction temperature falls below $T_{(TSD)} - T_{(TSD_HYS)}$, the device recovers to normal operation.

7.4 Device Functional Modes

7.4.1 Undervoltage Lockout, $V_{(SUPPLY)} < V_{(POR_rising)}$

When the TPS92612 device is in undervoltage lockout mode, the device disables all functions until the supply rises above the $V_{(POR_rising)}$ threshold.

7.4.2 Normal State, $V_{(SUPPLY)} \geq 4.5$ V

The device regulates output current in normal state. With enough voltage drop across SUPPLY and OUT, the device is able to drive the output in constant-current mode.

Copyright © 2020, Texas Instruments Incorporated

8 Application and Implementation

NOTE

Information in the following applications sections is not part of the TI component specification, and TI does not warrant its accuracy or completeness. TI's customers are responsible for determining suitability of components for their purposes. Customers should validate and test their design implementation to confirm system functionality.

8.1 Application Information

The TPS92612 device is a constant-current regulator which can be used as a LED driver, general constant-current source or current limiter in industrial applications.

Thermal performance is one of the design challenges for linear devices. To increase current-driving capability, the device supports heat sharing using an external parallel resistor, as shown in Figure 15. This technique provides the low-cost solution of using external resistors to minimize thermal accumulation on the device itself, and still keeps high accuracy of the total current output.

8.2 Typical Application

8.2.1 Single LED Driver

The TPS92612 offers a cost-effective and easy-to-use solution for LED driver applications. PWM input can be adopted for LED brightness adjust and LED ON/OFF control. The device also supports off-board LED connection with long cables.

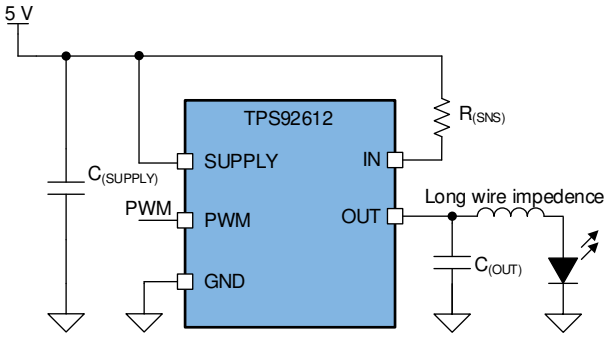

Figure 12. Typical Application Diagram

8.2.1.1 Design Requirements

The input voltage is 5 V ± 5%. LED maximum forward voltage V_{F_MAX} = 2.5 V, minimum forward voltage V_{F_MIN} = 1.9 V, current $I_{(LED)}$ = 150 mA. LED is connected to device OUT pin through a 1-m long wire.

8.2.1.2 Detailed Design Procedure

STEP 1: Determine the current setting resistor, $R_{(SNS)}$ value by using Equation 2.

$$R_{(SNS)} = \frac{V_{(CS_REG)}}{I_{(LED)}} = 0.653\Omega \quad (2)$$

where

- $V_{(CS_REG)}$ = 98 mV (typical)
- $I_{(LED)}$ = 150 mA

STEP 2: Power consumption analysis for the worst application conditions.

Copyright © 2020, Texas Instruments Incorporated

Typical Application (continued)

Normally the thermal analysis is necessary for linear LED-driver applications to ensure that the operation junction temperature of TPS92612 is well managed. The total power consumption on the TPS92612 itself is one important factor determining operation junction temperature, and it can be calculated by using Equation 3. Based on the worst-case analysis for maximum power consumption on device, consider either optimizing PCB layout for better power dissipation as *Layout* describes or adding an extra heat-sharing resistor as described in *Single-Channel LED Driver With Heat Sharing*.

$$P_{(DEV)} = \left(V_{(SUPPLY)} - V_{(CS_REG)} - V_{(OUT)}\right) \times I_{(LED)} + V_{(SUPPLY)} \times I_{(Quiescent)}$$

$$P_{(DEV_MAX)} = (5.25 - 0.098 - 1.9) \times 0.15 + 5.25 \times 0.00025 = 0.489W$$

where

- $V_{(CS_REG)}$ = 98 mV (typical)
- $I_{(Quiescent)}$ = 250 µA (maximum) (3)

In this application, the calculated result for maximum power consumption on the TPS92612 is 0.489 W at $V_{(SUPPLY)}$ = 5.25 V and $I_{(LED)}$ = 150 mA conditions.

TI recommends to add capacitors $C_{(SUPPLY)}$ at SUPPLY and $C_{(OUT)}$ at OUT. TI recommends one 1-µF capacitor plus one 100-nF decoupling ceramic capacitor close to the SUPPLY pin for $C_{(SUPPLY)}$ and a 10-nF ceramic capacitor close to the OUT pin for $C_{(OUT)}$. The larger capacitor for $C_{(SUPPLY)}$ or $C_{(OUT)}$ is helpful for EMI and ESD immunity; however, large $C_{(OUT)}$ takes a longer time to charge up the capacitor and may affect PWM dimming performance.

8.2.1.3 Application Curve

A 1-µH inductor is connected between OUT and the LED to simulate the 1-m long cable.

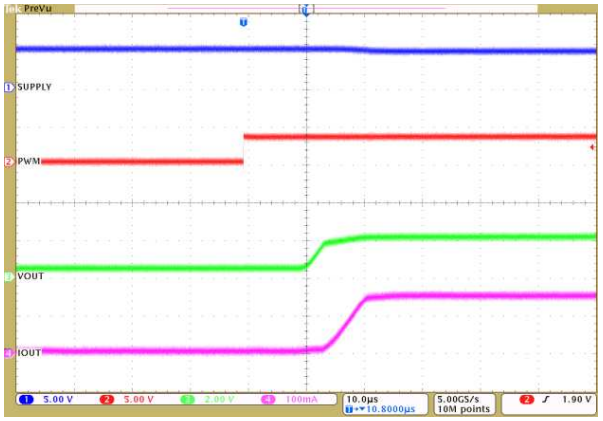

Ch. 1 = $V_{(SUPPLY)}$ Ch. 2 = $V_{(PWM)}$
Ch. 3 = $V_{(OUT)}$ Ch. 4 = $I_{(OUT)}$

Figure 13. Output Current With PWM Input



Ch. 1 = $V_{(SUPPLY)}$ Ch. 2 = $V_{(PWM)}$
Ch. 3 = $V_{(OUT)}$ Ch. 4 = $I_{(OUT)}$

Figure 14. Output Current With PWM Input

8.2.2 Single-Channel LED Driver With Heat Sharing

Using parallel resistors, thermal performance can be improved by balancing current between the TPS92612 device and the external resistors as follows. As the current-sense resistor controls the total LED string current, the LED string current $I_{(LED)}$ is set by $V_{(CS_REG)}$ / $R_{(SNS)}$, while the TPS92612 current $I_{(DRIVE)}$ and parallel resistor current $I_{(P)}$ combine to the total current.

Typical Application (continued)

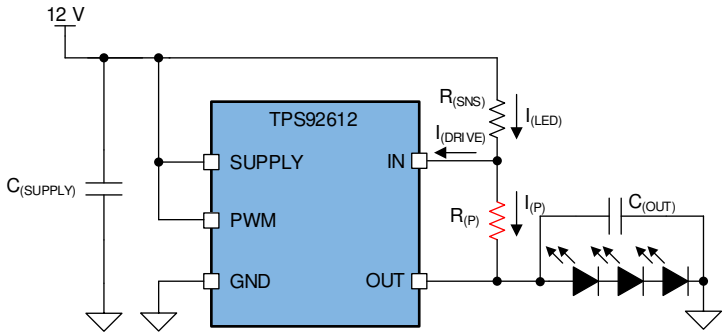

Figure 15. Heat Sharing With a Parallel Resistor

8.2.2.1 Design Requirements

The input voltage range is 12 V ± 10%, LED maximum forward voltage V_{F_MAX} = 2.5 V, minimum forward voltage V_{F_MIN} = 1.9 V, current $I_{(LED)}$ = 150 mA.

8.2.2.2 Detailed Design Procedure

In linear LED driver applications, the input and output voltage variation generates the most of the thermal concerns. The resistor current $I_{(P)}$, as indicated by Ohm's law, depends on the voltage across the external resistors. The TPS92612 controls the driver current $I_{(DRIVE)}$ to attain the desired total current. If $I_{(P)}$ increases, the TPS92612 device decreases $I_{(DRIVE)}$ to compensate, and vice versa. The parallel-resistor takes highest current and generates maximum heat at maximum supply voltage and minimum LED-string forward voltage.

The parallel resistor value must be carefully calculated to ensure that 1) thermal dissipation for both the TPS92612 device and the resistor is within their thermal dissipation limits, and 2) device current at high voltage drop condition is above the minimal output-current requirement.

STEP 1: Determine the current setting resistor, $R_{(SNS)}$ value by using Equation 4.

$$R_{(SNS)} = \frac{V_{(CS_REG)}}{I_{(LED)}} = 0.653\Omega \quad (4)$$

where

- $V_{(CS_REG)}$ = 98 mV (typical)
- $I_{(LED)}$ = 150 mA

The calculated result for $R_{(SNS)}$ is 0.653 Ω.

STEP 2: Calculate the parallel resistor, $R_{(P)}$ value by using Equation 5.

The parallel resistor $R_{(P)}$ is recommended to consume 50% of the total current at maximum supply voltage and minimum LED-string forward voltage.

$$R_{(P)} = \frac{V_{(SUPPLY)} - V_{(CS_REG)} - V_{(OUT)}}{0.5 \times I_{(LED)}} = \frac{13.2 - 0.098 - 3 \times 1.9}{0.5 \times 0.15} \approx 100\Omega \quad (5)$$

where

- $V_{(CS_REG)}$ = 98 mV (typical)
- $I_{(LED)}$ = 150 mA

The calculated result for $R_{(P)}$ is about 100 Ω at $V_{(SUPPLY)}$ = 13.2 V.

STEP 3: Power consumption analysis for the worst application conditions.

The total device power consumption can be calculated by Equation 6.

Copyright © 2020, Texas Instruments Incorporated

Typical Application (continued)

$$P_{(DEV)} = \left(V_{(SUPPLY)} - V_{(CS_REG)} - V_{(OUT)}\right) \times \left(I_{(LED)} - \frac{V_{(SUPPLY)} - V_{(CS_REG)} - V_{(OUT)}}{R_{(P)}}\right) + V_{(SUPPLY)} \times I_{(Quiescent)}$$

$$P_{(DEV_MAX)} = \left(13.2 - 0.098 - 3 \times 1.9\right) \times \left(0.15 - \frac{13.2 - 0.098 - 3 \times 1.9}{100}\right) + 13.2 \times 0.00025 = 0.566W$$

where

- $V_{(CS_REG)}$ = 98 mV (typical)
- $I_{(Quiescent)}$ = 250 µA (maximum) (6)

The calculated maximum power consumption on the TPS92612 device is 0.566 W at $V_{(SUPPLY)}$ = 13.2 V, $V_{(OUT)}$ = 3 × 1.9 V = 5.7 V and $I_{(LED)}$ = 150 mA.

The power consumption on resistor $R_{(P)}$ can be calculated through Equation 7.

$$P_{(RP)} = \frac{\left(V_{(SUPPLY)} - V_{(CS_REG)} - V_{(OUT)}\right)^2}{R_{(P)}}$$

$$P_{(RP_MAX)} = \frac{\left(13.2 - 0.098 - 3 \times 1.9\right)^2}{100} = 0.548W$$

where

- $V_{(CS_REG)}$ = 98 mV (typical) (7)

The calculated maximum power consumption on the 100 Ω, $R_{(P)}$ parallel resistor is 0.548 W at $V_{(SUPPLY)}$ = 13.2 V and $V_{(OUT)}$ = 3 × 1.9 V = 5.7 V.

TI recommends adding capacitors $C_{(SUPPLY)}$ at SUPPLY and $C_{(OUT)}$ at OUT. One 1-µF capacitor plus one 100-nF decoupling ceramic capacitor close to the SUPPLY pin is recommended for $C_{(SUPPLY)}$, and a 10-nF ceramic capacitor close to the OUT pin is recommended for $C_{(OUT)}$. The larger capacitor for $C_{(SUPPLY)}$ or $C_{(OUT)}$ is helpful for EMI and ESD immunity, however large $C_{(OUT)}$ takes a longer time to charge up the capacitor and could affect PWM dimming performance.

Note that the parallel resistor path cannot be shut down by PWM or fault protection. If PWM control is required, TI recommends an application circuit as shown in Figure 16. A NPN bipolar transistor with a base current-limiting resistor, R_1, can modulate the output current together with the device PWM function. The resistor value of R_1 needs to be calculated based on the applied PWM voltage and β value of selected NPN transistor.

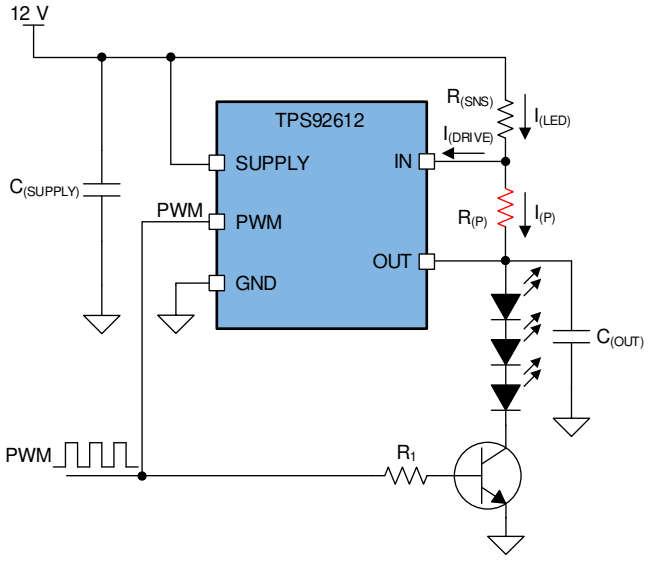

Figure 16. PWM Control With Heat Sharing Resistor

Typical Application (continued)

8.2.2.3 Application Curve



Ch. 1 = $V_{(SUPPLY)}$ Ch. 2 = $V_{(OUT)}$ Ch. 3 = $I_{(P)}$ Ch. 4 = $I_{(LED)}$

Figure 17. Constant Output Current With Heat Sharing Resistor

9 Power Supply Recommendations

The TPS92612 is designed to operate from a power system within the range specified in the *Recommended Operating Conditions*. The SUPPLY input must be protected from reverse voltage and overvoltage over 40 V. The impedance of the input supply rail must be low enough that the input current transient does not cause drop below LED string required forward voltage. If the input supply is connected with long wires, additional bulk capacitance may be required in addition to normal input capacitor.

Copyright © 2020, Texas Instruments Incorporated

10 Layout

10.1 Layout Guidelines

Thermal dissipation is the primary consideration for TPS92612 layout. TI recommends good thermal dissipation area beneath the device for better thermal performance.

10.2 Layout Example

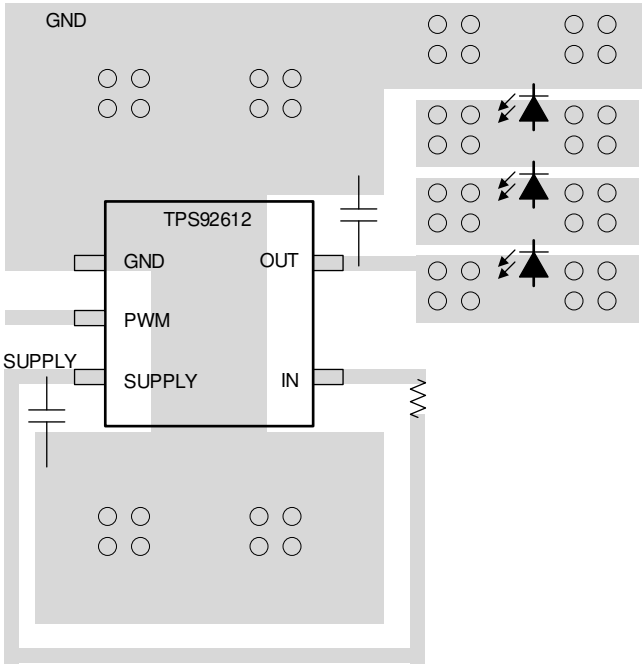

Figure 18. TPS92612 Example Layout Diagram

11 Device and Documentation Support

11.1 Receiving Notification of Documentation Updates

To receive notification of documentation updates, navigate to the device product folder on ti.com. In the upper right corner, click on *Alert me* to register and receive a weekly digest of any product information that has changed. For change details, review the revision history included in any revised document.

11.2 Support Resources

TI E2E™ support forums are an engineer's go-to source for fast, verified answers and design help — straight from the experts. Search existing answers or ask your own question to get the quick design help you need.

Linked content is provided "AS IS" by the respective contributors. They do not constitute TI specifications and do not necessarily reflect TI's views; see TI's Terms of Use.

11.3 Trademarks

E2E is a trademark of Texas Instruments.
All other trademarks are the property of their respective owners.

11.4 Electrostatic Discharge Caution



This integrated circuit can be damaged by ESD. Texas Instruments recommends that all integrated circuits be handled with appropriate precautions. Failure to observe proper handling and installation procedures can cause damage.

ESD damage can range from subtle performance degradation to complete device failure. Precision integrated circuits may be more susceptible to damage because very small parametric changes could cause the device not to meet its published specifications.

11.5 Glossary

SLYZ022 — *TI Glossary*.

This glossary lists and explains terms, acronyms, and definitions.

12 Mechanical, Packaging, and Orderable Information

The following pages include mechanical, packaging, and orderable information. This information is the most current data available for the designated devices. This data is subject to change without notice and revision of this document. For browser-based versions of this data sheet, refer to the left-hand navigation.

Copyright © 2020, Texas Instruments Incorporated

PACKAGING INFORMATION

Orderable part number	Status (1)	Material type (2)	Package | Pins	Package qty | Carrier	RoHS (3)	Lead finish/ Ball material (4)	MSL rating/ Peak reflow (5)	Op temp (°C)	Part marking (6)
TPS92612DBVR	Active	Production	SOT-23 (DBV) | 5	3000 | LARGE T&R	Yes	NIPDAU	Level-1-260C-UNLIM	-40 to 125	22SF
TPS92612DBVR.A	Active	Production	SOT-23 (DBV) | 5	3000 | LARGE T&R	Yes	NIPDAU	Level-1-260C-UNLIM	-40 to 125	22SF

(1) **Status:** For more details on status, see our product life cycle.

(2) **Material type:** When designated, preproduction parts are prototypes/experimental devices, and are not yet approved or released for full production. Testing and final process, including without limitation quality assurance, reliability performance testing, and/or process qualification, may not yet be complete, and this item is subject to further changes or possible discontinuation. If available for ordering, purchases will be subject to an additional waiver at checkout, and are intended for early internal evaluation purposes only. These items are sold without warranties of any kind.

(3) **RoHS values:** Yes, No, RoHS Exempt. See the TI RoHS Statement for additional information and value definition.

(4) **Lead finish/Ball material:** Parts may have multiple material finish options. Finish options are separated by a vertical ruled line. Lead finish/Ball material values may wrap to two lines if the finish value exceeds the maximum column width.

(5) **MSL rating/Peak reflow:** The moisture sensitivity level ratings and peak solder (reflow) temperatures. In the event that a part has multiple moisture sensitivity ratings, only the lowest level per JEDEC standards is shown. Refer to the shipping label for the actual reflow temperature that will be used to mount the part to the printed circuit board.

(6) **Part marking:** There may be an additional marking, which relates to the logo, the lot trace code information, or the environmental category of the part.

Multiple part markings will be inside parentheses. Only one part marking contained in parentheses and separated by a "~" will appear on a part. If a line is indented then it is a continuation of the previous line and the two combined represent the entire part marking for that device.

Important Information and Disclaimer: The information provided on this page represents TI's knowledge and belief as of the date that it is provided. TI bases its knowledge and belief on information provided by third parties, and makes no representation or warranty as to the accuracy of such information. Efforts are underway to better integrate information from third parties. TI has taken and continues to take reasonable steps to provide representative and accurate information but may not have conducted destructive testing or chemical analysis on incoming materials and chemicals. TI and TI suppliers consider certain information to be proprietary, and thus CAS numbers and other limited information may not be available for release.

In no event shall TI's liability arising out of such information exceed the total purchase price of the TI part(s) at issue in this document sold by TI to Customer on an annual basis.

OTHER QUALIFIED VERSIONS OF TPS92612 :

- Automotive : TPS92612-Q1

NOTE: Qualified Version Definitions:

- Automotive - Q100 devices qualified for high-reliability automotive applications targeting zero defects

TAPE AND REEL INFORMATION

REEL DIMENSIONS

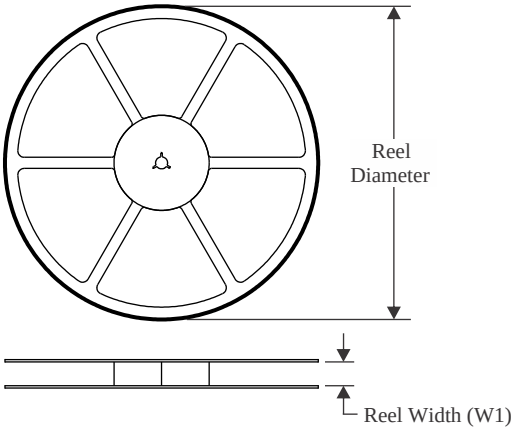

TAPE DIMENSIONS

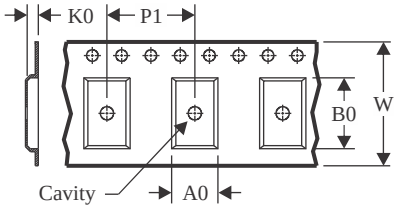

A0	Dimension designed to accommodate the component width
B0	Dimension designed to accommodate the component length
K0	Dimension designed to accommodate the component thickness
W	Overall width of the carrier tape
P1	Pitch between successive cavity centers

QUADRANT ASSIGNMENTS FOR PIN 1 ORIENTATION IN TAPE

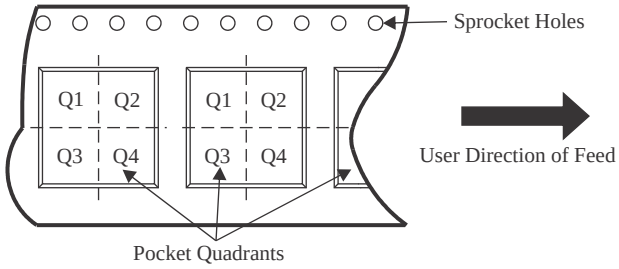

*All dimensions are nominal

Device	Package Type	Package Drawing	Pins	SPQ	Reel Diameter (mm)	Reel Width W1 (mm)	A0 (mm)	B0 (mm)	K0 (mm)	P1 (mm)	W (mm)	Pin1 Quadrant
TPS92612DBVR	SOT-23	DBV	5	3000	180.0	8.4	3.2	3.2	1.4	4.0	8.0	Q3
TPS92612DBVR	SOT-23	DBV	5	3000	180.0	8.4	3.2	3.2	1.4	4.0	8.0	Q3

TAPE AND REEL BOX DIMENSIONS

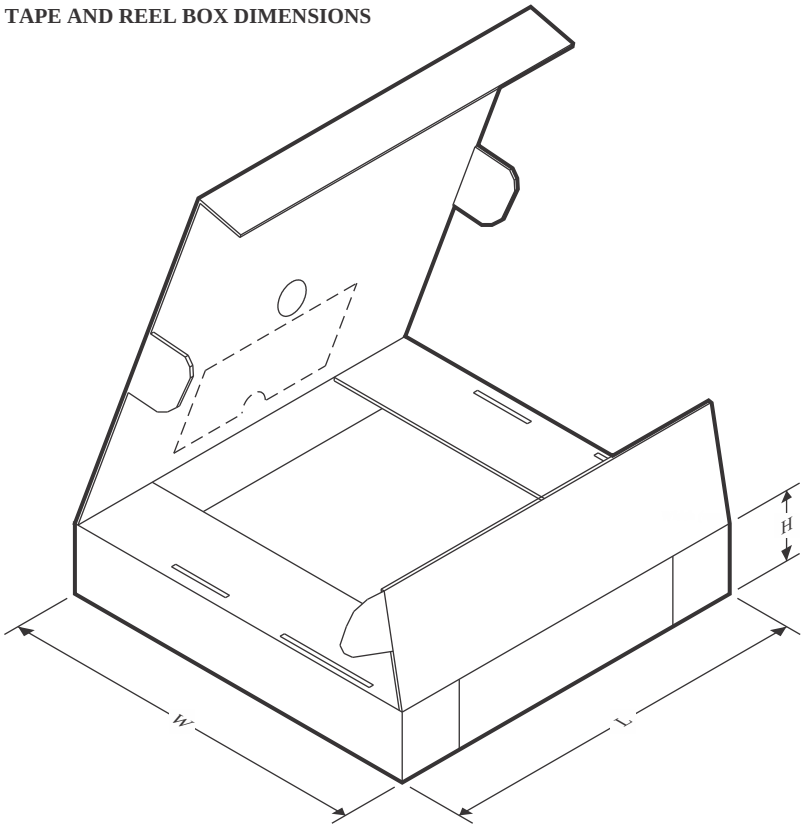

*All dimensions are nominal

Device	Package Type	Package Drawing	Pins	SPQ	Length (mm)	Width (mm)	Height (mm)
TPS92612DBVR	SOT-23	DBV	5	3000	210.0	185.0	35.0
TPS92612DBVR	SOT-23	DBV	5	3000	210.0	185.0	35.0

PACKAGE OUTLINE

DBV0005A

SOT-23 - 1.45 mm max height

SMALL OUTLINE TRANSISTOR

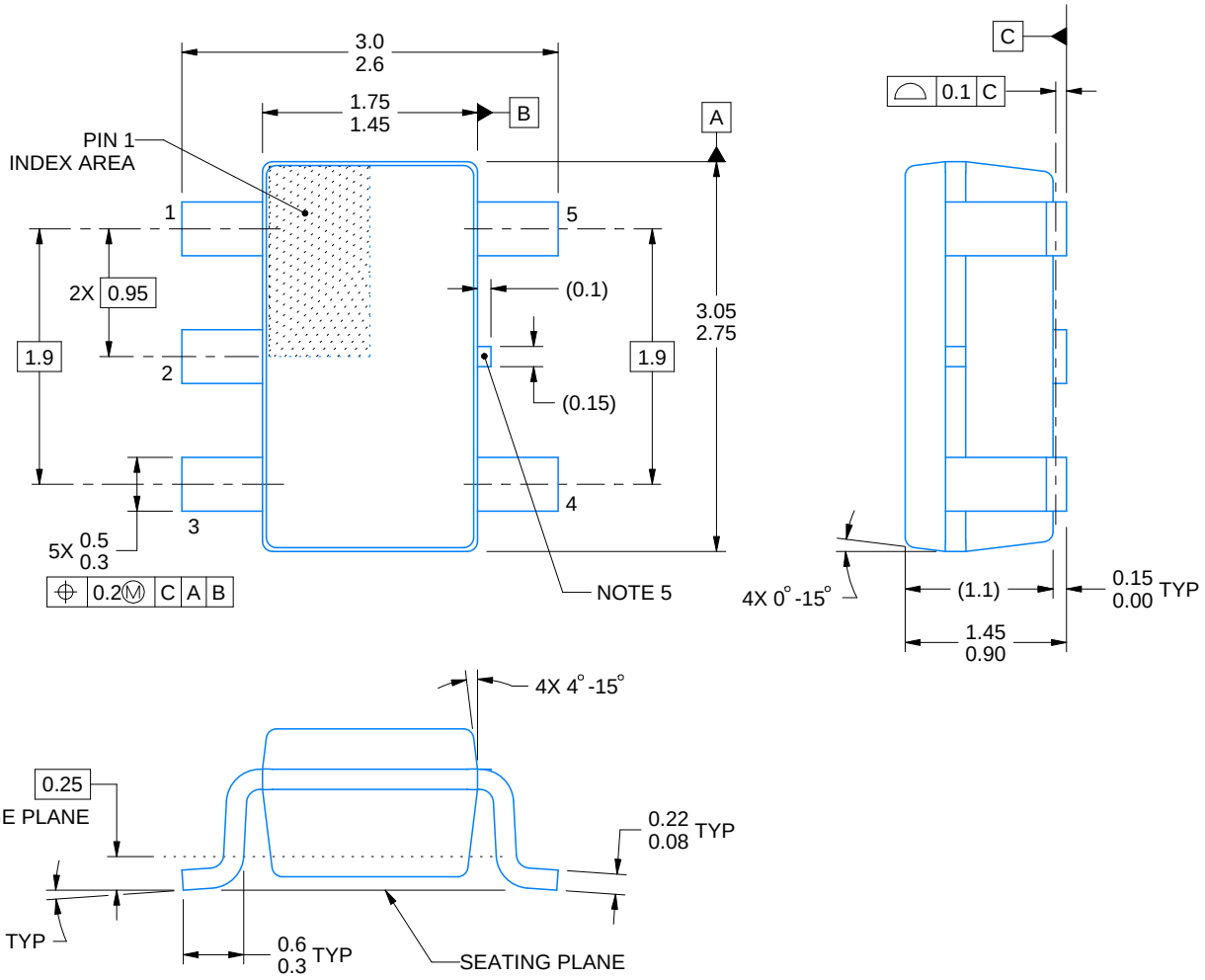

4214839/K 08/2024

NOTES:

1. All linear dimensions are in millimeters. Any dimensions in parenthesis are for reference only. Dimensioning and tolerancing per ASME Y14.5M.
2. This drawing is subject to change without notice.
3. Refernce JEDEC MO-178.
4. Body dimensions do not include mold flash, protrusions, or gate burrs. Mold flash, protrusions, or gate burrs shall not exceed 0.25 mm per side.
5. Support pin may differ or may not be present.

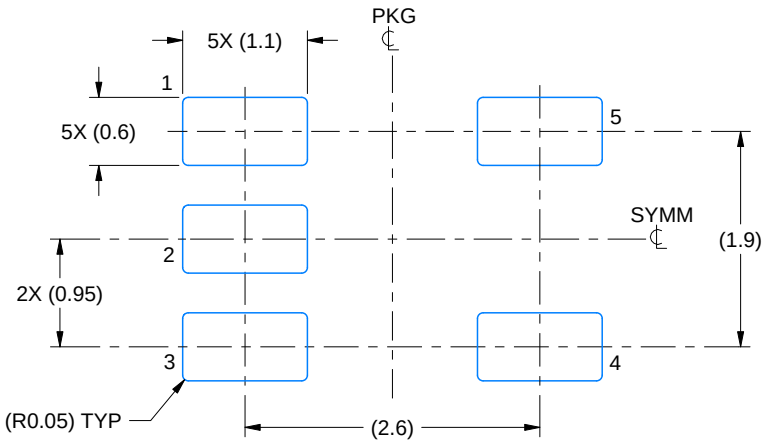

LAND PATTERN EXAMPLE
EXPOSED METAL SHOWN
SCALE:15X

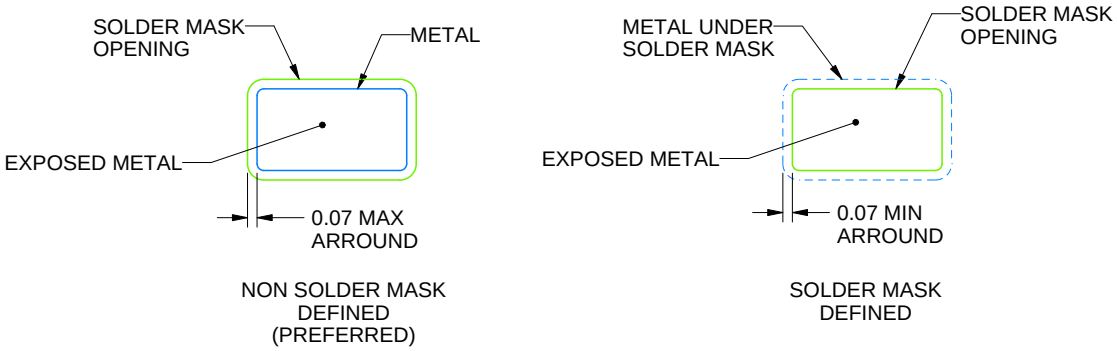

SOLDER MASK DETAILS

4214839/K 08/2024

NOTES: (continued)

6. Publication IPC-7351 may have alternate designs.
7. Solder mask tolerances between and around signal pads can vary based on board fabrication site.

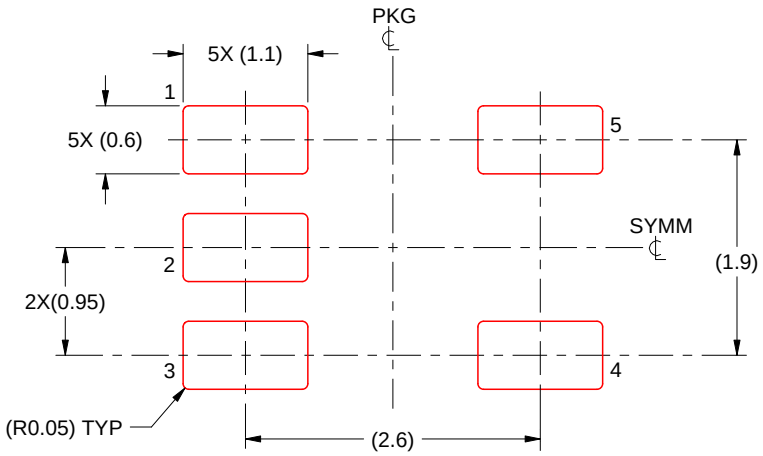

SOLDER PASTE EXAMPLE
BASED ON 0.125 mm THICK STENCIL
SCALE:15X

4214839/K 08/2024

NOTES: (continued)

8. Laser cutting apertures with trapezoidal walls and rounded corners may offer better paste release. IPC-7525 may have alternate design recommendations.
9. Board assembly site may have different recommendations for stencil design.

IMPORTANT NOTICE AND DISCLAIMER

TI PROVIDES TECHNICAL AND RELIABILITY DATA (INCLUDING DATASHEETS), DESIGN RESOURCES (INCLUDING REFERENCE DESIGNS), APPLICATION OR OTHER DESIGN ADVICE, WEB TOOLS, SAFETY INFORMATION, AND OTHER RESOURCES “AS IS” AND WITH ALL FAULTS, AND DISCLAIMS ALL WARRANTIES, EXPRESS AND IMPLIED, INCLUDING WITHOUT LIMITATION ANY IMPLIED WARRANTIES OF MERCHANTABILITY, FITNESS FOR A PARTICULAR PURPOSE OR NON-INFRINGEMENT OF THIRD PARTY INTELLECTUAL PROPERTY RIGHTS.

These resources are intended for skilled developers designing with TI products. You are solely responsible for (1) selecting the appropriate TI products for your application, (2) designing, validating and testing your application, and (3) ensuring your application meets applicable standards, and any other safety, security, regulatory or other requirements.

These resources are subject to change without notice. TI grants you permission to use these resources only for development of an application that uses the TI products described in the resource. Other reproduction and display of these resources is prohibited. No license is granted to any other TI intellectual property right or to any third party intellectual property right. TI disclaims responsibility for, and you fully indemnify TI and its representatives against any claims, damages, costs, losses, and liabilities arising out of your use of these resources.

TI’s products are provided subject to TI’s Terms of Sale, TI’s General Quality Guidelines, or other applicable terms available either on ti.com or provided in conjunction with such TI products. TI’s provision of these resources does not expand or otherwise alter TI’s applicable warranties or warranty disclaimers for TI products. Unless TI explicitly designates a product as custom or customer-specified, TI products are standard, catalog, general purpose devices.

TI objects to and rejects any additional or different terms you may propose.

Copyright © 2026, Texas Instruments Incorporated

Last updated 10/2025