TUSB217A USB 2.0 High-Speed Signal Conditioner With DCP and CDP Controllers

1 Features

- Wide supply voltage range: 2.3 – 6.5 V
- Ultra-low USB disconnect and shutdown power consumption
- Provides USB 2.0 high-speed signal conditioning
- Compatible with USB 2.0, OTG 2.0 and BC 1.2
- Support for low-speed, full-speed, high-speed signaling
- Integrated BC 1.2 Charging Downstream Port (CDP) and Dedicated Charging Port (DCP) controllers that dynamically changes per DCP/CDP pin
- Host or device agnostic
- Supports up to 5-m cable length
  - Four selectable signal boost (edge boost along with DC boost) settings through the external pull-down resistor values
  - Three selectable RX equalization settings through the pull-up-or-down to compensate ISI jitter for high-loss applications
- Supports up to 10-m cable length with two TUSB217A devices
- Scalable solution – devices can be daisy chained for high loss applications
- RWB is pin compatible with TUSB211/212/214/216

2 Applications

- Laptop, desktop or docking stations
- Portable electronics
- Tablets
- Cell phones
- Televisions
- Active cable, cable extenders, backplane

3 Description

The TUSB217A is a third-generation USB 2.0 high-speed signal conditioner designed to compensate both AC loss (due to capacitive load) and DC loss (due to resistive loss) in the transmission channel.

The TUSB217A leverages a patented design to speed-up transition edges of USB 2.0 high-speed signal with an edge booster and increases static levels with a DC boost function. In addition, the TUSB217A includes a pre-equalization function to improve the receiver sensitivity and compensate the inter-symbol interference (ISI) jitter in application with longer cable length. USB low-speed and full-speed signal characteristics are unaffected by the TUSB217A.

The TUSB217A improves signal quality without altering packet timing or adding propagation delay or latency.

The TUSB217A helps a system to pass the USB 2.0 high-speed near end eye compliance with a cable as long as 5 meters.

The TUSB217A is compatible with the USB On-The-Go (OTG) and battery charging (BC 1.2) protocols. The Integrated BC 1.2 battery charging controller can be enabled through a control pin.

Device Information(1)

PART NUMBER	PACKAGE	OP TEMP (T_A) °C	BODY SIZE (NOM)
TUSB217A	X2QFN (12RWB)	0 to 70	1.60 mm × 1.60 mm
TUSB217AI	X2QFN (12RWB)	-40 to 85	1.60 mm × 1.60 mm

(1) For all available packages, see the orderable addendum at the end of the data sheet.

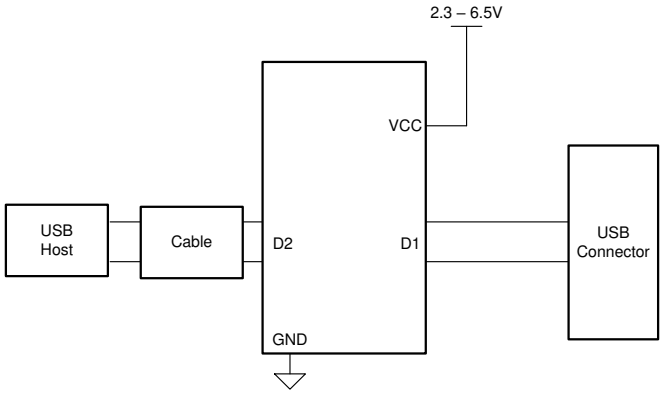

Simplified Schematic

An IMPORTANT NOTICE at the end of this data sheet addresses availability, warranty, changes, use in safety-critical applications, intellectual property matters and other important disclaimers. PRODUCTION DATA.

Table of Contents

1 Features....1
2 Applications....1
3 Description....1
4 Revision History....2
5 Device Comparison....3
6 Pin Configuration and Functions....4
7 Specifications....6
7.1 Absolute Maximum Ratings....6
7.2 ESD Ratings....6
7.3 Recommended Operating Conditions....6
7.4 Thermal Information....6
7.5 Electrical Characteristics....7
7.6 Switching Characteristics....8
7.7 Timing Requirements....9
8 Detailed Description....10
8.1 Overview....10
8.2 Functional Block Diagram....10
8.3 Feature Description....10
8.4 Device Functional Modes....10
8.5 TUSB217A Registers....12
9 Application and Implementation....15
9.1 Application Information....15
9.2 Typical Application....15
10 Power Supply Recommendations....24
11 Layout....24
11.1 Layout Guidelines....24
11.2 Layout Example....24
12 Device and Documentation Support....25
12.1 Receiving Notification of Documentation Updates....25
12.2 Support Resources....25
12.3 Trademarks....25
12.4 Electrostatic Discharge Caution....25
12.5 Glossary....25
13 Mechanical, Packaging, and Orderable Information....25

4 Revision History

DATE	REVISION	NOTES
June 2021	*	Initial Release

Copyright © 2021 Texas Instruments Incorporated

5 Device Comparison

	TUSB211	TUSB212	TUSB214	TUSB216I	TUSB217A
Supply (V)	3.3	3.3	3.3	2.3 to 6.5	2.3 to 6.5
DC Boost		3 levels	3 levels	Tandem with AC Boost	Tandem with AC Boost
RX pre-equalization for ISI compensation				3 levels	3 levels
Charging Downstream Port (CDP) controller			Always ON	Pin Controlled	Always ON. Dynamically selected by DCP/CDP pin
Dedicated Charging Port (DCP) controller					Always ON. Dynamically selected by DCP/CDP pin
Cable length compensation for near-end high-speed eye mask Compliance (pre-channel before redriver/post-channel after redriver) (meter - gauge)	2/1 - 28AWG	4/2 - 28AWG	4/2 - 28AWG	6/3 - 28AWG (10 - 24AWG with one redriver on each end)	6/3 - 28AWG (10 - 24AWG with one redriver on each end)
Cable length compensation for far-end high-speed eye mask Compliance (pre-channel before redriver/post-channel after redriver) (meter - gauge)	5/3 - 28AWG	8/6 - 28AWG	8/6 - 28AWG	10/8 - 26AWG (10 - 28AWG with one redriver on each end)	10/8 - 26AWG (10 - 28AWG with one redriver on each end)

Copyright © 2021 Texas Instruments Incorporated

6 Pin Configuration and Functions

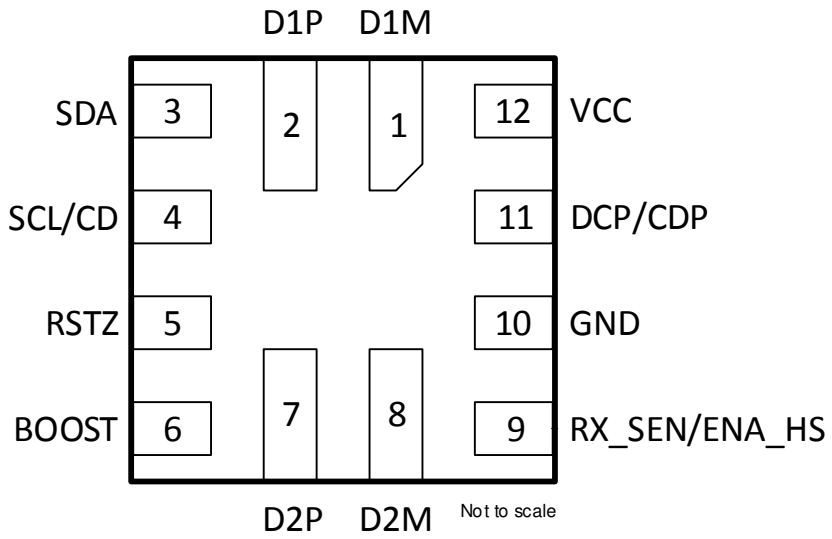

Figure 6-1. TUSB217A RWB 12-Pin X2QFN Top View

Table 6-1. Pin Functions

PIN (RWB)		I/O	INTERNAL PULLUP/PULLDOWN	DESCRIPTION
NAME	NO. (RWB)			
BOOST	6	I	N/A	USB High-speed boost select through the external pull down resistor. Both edge boost and DC boost are controlled by a single pin in non-I2C mode. In I2C mode edge boost and DC boost can be individually controlled. Sampled upon power up. Does not recognize real time adjustments. Auto selects BOOST LEVEL = 3 when left floating.
DCP/CDP	11	I	500 kΩ PU	DCP or CDP mode selection. Low=DCP and High=CDP TUSB217ARWB BC1.2 controller is always enabled.
RX_SEN[(2)]/ENA_HS	9	I/O	N/A	In I2C mode: Reserved for TI test purpose. In non-I2C mode: At reset: 3-level input signal RX_SEN. USB High-speed RX Equalization Setting to Compensate ISI Jitter H (pin is pulled high) – high RX equalization (high loss channel) M (pin is left floating) – medium RX equalization (medium loss channel) L (pin is pulled low) – low RX equalization (low loss channel) After reset: Output signal ENA_HS. Flag indicating that channel is in High-speed mode. Asserted upon: 1. Detection of USB-IF High-speed test fixture from an unconnected state followed by transmission of USB TEST_PACKET pattern. 2. Squelch detection following USB reset with a successful HS handshake [HS handshake is declared to be successful after single chirp J chirp K pair where each chirp is within 18 µs – 128 µs].
D2P	7	I/O	N/A	USB High-speed positive port.
D2M	8	I/O	N/A	USB High-speed negative port.
GND	10	P	N/A	Ground
D1M	1	I/O	N/A	USB High-speed negative port..
D1P	2	I/O	N/A	USB High-speed positive port.
SDA[(1)]	3	I/O	500 kΩ PU 1.8 MΩ PD	I2C Mode: Bidirectional I2C data pin [7-bit I2C slave address = 0x2C]. In non I2C mode: Reserved for TI test purpose.
VCC	12	P	N/A	Supply power

Copyright © 2021 Texas Instruments Incorporated

Table 6-1. Pin Functions (continued)

PIN (RWB)		I/O	INTERNAL PULLUP/PULLDOWN	DESCRIPTION
NAME	NO. (RWB)			
RSTN	5	I	500 kΩ PU 1.8 MΩ PD	Device disable/enable. Low – Device is at reset and in shutdown, and High - Normal operation. Recommend 0.1-µF external capacitor to GND to ensure clean power on reset if not driven. If the pin is driven, it must be held low until the supply voltage for the device reaches within specifications.
SCL(1)/CD	4	I/O	When RSTN asserted there is a 500 kΩ PD	In I2C mode: I2C clock pin [I2C address = 0x2C]. Non I2C mode: After reset: Output CD. Flag indicating that a USB device is attached (connection detected). Asserted from an unconnected state upon detection of DP or DM pull-up resistor. De-asserted upon detection of disconnect.

(1) Pull-up resistors for SDA and SCL pins in I^2C mode should be $R_{Pull\text{-}up}$ (depending on I2C bus voltage). If both SDA and SCL are pulled up at power-up the device enters into I^2C mode.
(2) Pull-down and pull-up resistors for RX_SEN pin must follow R_{RXSEN1} and R_{RXSEN2} resistor recommendations in non I^2C mode.

7 Specifications

7.1 Absolute Maximum Ratings

Over operating free-air temperature range (unless otherwise noted) [(1)]

		MIN	MAX	UNIT
Supply voltage range	VCC	–0.3	7	V
Voltage range USB data	DxP, DxM	–0.3	5.5	V
Voltage range on BOOST pin	BOOST	-0.3	1.98	V
Voltage range other pins	RX_SEN, DCP/CDP,SDA,SCL, RSTN	-0.3	5.5	V
Storage temperature, T_{stg}		–65	150	°C
Maximum junction temperature, $T_{J\ (max)}$			125	°C

(1) *Operation outside the Absolute Maximum Ratings may cause permanent device damage. Absolute Maximum Ratings do not imply functional operation of the device at these or any other conditions beyond those listed under Recommended Operating Conditions. If used outside the Recommended Operating Conditions but within the Absolute Maximum Ratings, the device may not be fully functional, and this may affect device reliability, functionality, performance, and shorten the device lifetime.*

7.2 ESD Ratings

			VALUE	UNIT
$V_{(ESD)}$	Electrostatic discharge	Human-body model (HBM), per ANSI/ESDA/JEDEC JS-001[(1)]	±2000	V
		Charged-device model (CDM), per ANSI/ESDA/JEDEC JS-002[(2)]	±750	

(1) JEDEC document JEP155 states that 500-V HBM allows safe manufacturing with a standard ESD control process.
(2) JEDEC document JEP157 states that 250-V CDM allows safe manufacturing with a standard ESD control process.

7.3 Recommended Operating Conditions

over operating free-air temperature range (unless otherwise noted)

		MIN	NOM	MAX	UNIT
V_{CC}	Supply voltage	2.3	5	6.5	V
T_A	Operating free-air temperature (Standard)	0		70	°C
T_A	Operating free-air temperature (Industrial)	–40		85	°C
T_J	Junction temperature (Standard)			85	°C
T_J	Junction temperature (Industrial)			105	°C
V_{I2C_BUS}	I2C Bus Voltage	1.62		3.6	V
DxP, DxM	Voltage range USB data	0		3.6	V
BOOST	Voltage range BOOST pin	0		1.98	V
DIGITAL	Voltage range other pins (SCL, SDA, RSTN, DCP/CDP)	0		3.6	V
RX_SEN	Voltage range RX_SEN pin	0		5.0	V

7.4 Thermal Information

THERMAL METRIC [(1)]		RWB (X2QFN) 12 PINS	UNIT
$R_{\theta JA}$	Junction-to-ambient thermal resistance	137.4	°C/W
$R_{\theta JC(top)}$	Junction-to-case (top) thermal resistance	62	°C/W
$R_{\theta JB}$	Junction-to-board thermal resistance	67.2	°C/W
ψ_{JT}	Junction-to-top characterization parameter	1.9	°C/W
ψ_{JB}	Junction-to-board characterization parameter	67.3	°C/W
$R_{\theta JC(bot)}$	Junction-to-case (bottom) thermal resistance	N/A	°C/W

(1) For more information about traditional and new thermal metrics, see the *Semiconductor and IC Package Thermal Metrics* application report, SPRA953.

Copyright © 2021 Texas Instruments Incorporated

7.5 Electrical Characteristics

Over operating free-air temperature range (unless otherwise noted)

PARAMETER		TEST CONDITIONS	MIN	TYP (1)	MAX	UNIT
POWER						
I_{ACTIVE_HS}	High Speed Active Current	USB channel = HS mode. 480 Mbps traffic. V_{CC} supply stable, with Boost = Max		22	36	mA
I_{IDLE_HS}	High Speed Idle Current	USB channel = HS mode, no traffic. V_{CC} supply stable, Boost = Max		22	36	mA
$I_{HS_SUPSPEND}$	High Speed Suspend Current	USB channel = HS Suspend mode. V_{CC} supply stable		0.75	1.4	mA
I_{FS}	Full-Speed Current	USB channel = FS mode, 12 Mbps traffic, V_{cc} supply stable		0.75	1.4	mA
$I_{DISCONN}$	Disconnect Power	Host side application. No device attachment.		0.80	1.4	mA
I_{SHUTDN}	Shutdown Power	RSTN driven low, V_{CC} supply stable		60	115	µA
CONTROL PIN LEAKAGE						
I_{LKG_FS}	Pin failsafe leakage current for SDA, RSTN	V_{CC} = 0 V, pin at $V_{IH, max}$		10	15	µA
I_{LKG_FS}	Pin failsafe leakage current for RX_SEN	V_{CC} = 0 V, pin at $V_{IH, max}$		6	15	µA
I_{LKG_FS}	Pin failsafe leakage current for SCL	V_{CC} = 0 V, pin at $V_{IH, max}$			70	nA
INPUT RSTN						
V_{IH}	High level input voltage		1.5		3.6	V
V_{IL}	Low-level input voltage		0		0.5	V
I_{IH}	High level input current	V_{IH} = 3.6 V, R_{PU} enabled			±15	µA
I_{IL}	Low level input current	V_{IL} = 0V, R_{PU} enabled			±20	µA
INPUT DIGITAL						
V_{IH}	High level input voltage (DCP/ CDP)		1.5		3.6	V
V_{IL}	Low-level input voltage (DCP/ CDP)		0		0.5	V
I_{IL}	Low level input current	V_{IL} = 0V			±20	µA
I_{IH}	High level input current	V_{IH} = 3.6 V			±15	µA
INPUT RX_SEN (3-level input, for mid level leave pin floating)						
$V_{IH(Max)}$	Maximum High level input voltage	VCC = 2.3V to 6.5V			5.0	V
$V_{IH(Min)}$	Minimum High level input voltage	VCC > 4.5V	3.3			V
		VCC = 2.3V to 4.5V (% of VCC)	75			%
V_{IL}	Low level input voltage	VCC > 4.5V			0.75	V
		VCC = 2.3V to 4.5V (% of VCC)			15	%
INPUT BOOST						
R_{BOOST_LVL0}	External pulldown resistor for BOOST Level 0				160	Ω
R_{BOOST_LVL1}	External pulldown resistor for BOOST Level 1		1.5	1.8	2	kΩ
R_{BOOST_LVL2}	External pulldown resistor for BOOST Level 2		3.4	3.6	3.96	kΩ
R_{BOOST_LVL3}	External pulldown resistor for BOOST Level 3 to remove upper limit for resistor value, can be left open		7.5			kΩ
OUTPUTS CD, ENA_HS						
V_{OH}	High level output voltage for CD and ENA_HS	I_O = –50 µA, VCC >= 3.0V	2.5			V
V_{OH}	High level output voltage for CD	I_O = –25 µA, VCC = 2.3V	1.7			V

7.5 Electrical Characteristics (continued)

Over operating free-air temperature range (unless otherwise noted)

PARAMETER		TEST CONDITIONS	MIN	TYP (1)	MAX	UNIT
V_{OH}	High level output voltage for ENA_HS	I_O = –25 µA, VCC = 2.3V	1.8			V
V_{OL}	Low level output voltage for CD and ENA_HS	I_O = 50 µA			0.3	V
I2C						
C_{I2C_BUS}	I^2C Bus Capacitance		4		150	pF
I_{OL}	I^2C open drain output current	V_{OL} = 0.4V	1.5			mA
V_{IL}	2.3V<= VCC<= 4.3V, V_{I2C_BUS} = 1.8V +/-10%	$R_{Pull\text{-}up}$ =1.6kΩ to 2.5kΩ, % of V_{I2C_BUS}			25	%
V_{IL}	V_{I2C_BUS} = 3.3V +/-10%	$R_{Pull\text{-}up}$ =2.8kΩ to 7kΩ, % of V_{I2C_BUS}			25	%
V_{IH}	2.3V<= VCC<= 4.3V, V_{I2C_BUS} = 1.8V +/-10%	$R_{Pull\text{-}up}$ =1.6kΩ to 2.5kΩ, % of V_{I2C_BUS}	80			%
V_{IH}	V_{I2C_BUS} = 3.3V +/-10%	$R_{Pull\text{-}up}$ =2.8kΩ to 7kΩ, % of V_{I2C_BUS}	75			%
$R_{Pull\text{-}up}$	V_{I2C_BUS} = 1.8V +/-10%		1.6	2	2.5	kΩ
$R_{Pull\text{-}up}$	V_{I2C_BUS} = 3.3V +/-10%		2.8	4.7	7	kΩ
SCL Frequency					100	kHz
DxP, DxM						
C_{IO_DXX}	Capacitance to GND	Measured with VNA at 240 MHz, V_{CC} supply stable, Redriver off		2.5		pF

(1) All typical values are at V_{CC} = 5 V, and T_A = 25°C.

7.6 Switching Characteristics

Over operating free-air temperature range (unless otherwise noted)

PARAMETER		TEST CONDITIONS	MIN	TYP (1)	MAX	UNIT
DxP, DxM USB Signals						
F_{BR_DXX}	Bit Rate	USB channel = HS mode. 480 Mbps traffic. V_{CC} supply stable			480	Mbps
t_{R/F_DXX}	Rise/Fall time		100			ps

(1) All typical values are at V_{CC} = 5 V, and T_A = 25°C.

Copyright © 2021 Texas Instruments Incorporated

7.7 Timing Requirements

		MIN	NOM	MAX	UNIT
POWER UP TIMING					
T_{RSTN_PW}	Minimum width to detect a valid RSTN signal assert when the pin is actively driven low	100			µs
T_{STABLE}	VCC must be stable before RSTN de-assertion	300			µs
T_{READY}	Maximum time needed for the device to be ready after RSTN is de-asserted.			500	µs
T_{RAMP}	V_{CC} ramp time			100	ms
T_{RAMP}	V_{CC} ramp time	0.2			ms
I2C (STD)					
t_{SUSTO}	Stop setup time, SCL (T_r=600ns-1000ns), SDA (T_f=6.5ns-106.5ns), 100kHz STD	4			µs
t_{HDSTA}	Start hold time, SCL (Tr=600ns-1000ns), SDA (Tf=6.5ns-106.5ns), 100kHz STD	4			µs
t_{SUSTA}	Start setup time, SCL (T_r=600ns-1000ns), SDA (T_f=6.5ns-106.5ns), 100kHz STD	4.7			µs
t_{SUDAT}	Data input or False start/stop, setup time, SCL (T_r=600ns-1000ns), SDA (T_f=6.5ns-106.5ns), 100kHz STD	250			ns
t_{HDDAT}	Data input or False start/stop, hold time, SCL (T_r=600ns-1000ns), SDA (T_f=6.5ns-106.5ns), 100kHz STD	5			µs
t_{BUF}	Bus free time between START and STOP conditions	4.7			µs
t_{LOW}	Low period of the I_{2C} clock	4.7			µs
t_{HIGH}	High period of the I_{2C} clock	4			µs
t_F	Fall time of both SDA and SCL signals			300	ns
t_R	Rise time of both SDA and SCL signals			1000	ns

Copyright © 2021 Texas Instruments Incorporated

8 Detailed Description

8.1 Overview

The TUSB217A is a USB High-Speed (HS) signal conditioner designed to compensate for ISI signal loss in a transmission channel. TUSB217A has a patented design for USB Low Speed (LS) and Full Speed (FS) signals. It does not alter the signal characteristics. HS signals are compensated. The design is compatible with USB On-The-Go (OTG) and Battery Charging (BC) specifications.

Programmable signal gain through an external resistor permits fine tuning device performance to optimize signals. This helps pass USB HS electrical compliance tests at the connector. Additional RX sensitivity, tuned by external pull-up resistor and pull-down resistor, allows to overcome attenuation in cables. The TUSB217A allows application in series to cover longer distances, or high loss transmission paths. A maximum of 4 devices can be daisy-chained.

8.2 Functional Block Diagram

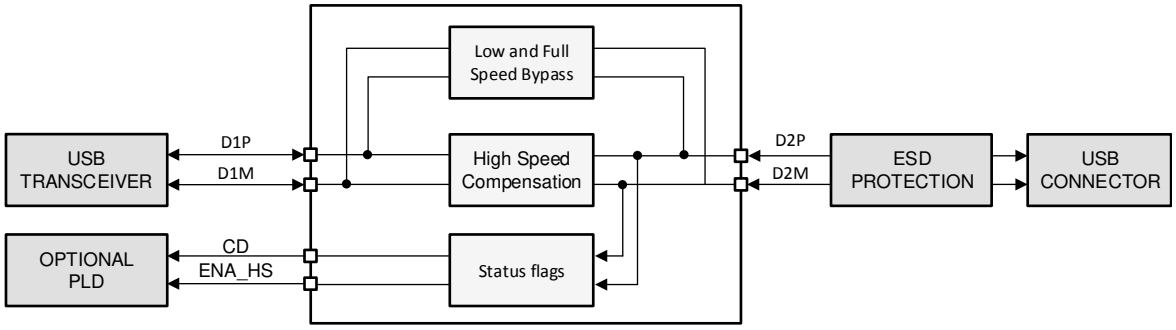

Copyright © 2018, Texas Instruments Incorporated

8.3 Feature Description

8.3.1 High-Speed Boost

The high-speed booster (combination of edge boost and DC boost) improves the eye width for USB2.0 high-speed signals. It is direction independent and by that is compatible to OTG systems. The BOOST pin is configuring the booster strength with different values of pull down resistors to set 4 levels of boosts, alternatively the boost level can be set through the I2C register according to Section 8.4.6. Internal circuitry of the signal conditioner reduces possible overshoot.

8.3.2 RX Sensitivity

The RX_SEN pin is a tri-level pin. It is used to set the equalization gain of the device according to system channel inter-symbol interference (ISI) loss. RX equalization can be increased to compensate for the higher ISI loss of the channel for example due to a long cable.

8.4 Device Functional Modes

8.4.1 Low-Speed (LS) Mode

TUSB217A automatically detects a LS connection and does not enable signal compensation. CD pin is asserted high but ENA_HS will be low.

8.4.2 Full-Speed (FS) Mode

TUSB217A automatically detects a FS connection and does not enable signal compensation. CD pin is asserted high but ENA_HS will be low.

8.4.3 High-Speed (HS) Mode

TUSB217A automatically detects a HS connection and will enable signal compensation as determined by the configuration of the RX_SEN pin and the external pull down resistance on its BOOST pin.

CD pin and ENA_HS pin are asserted high when high-speed boost is active.

Copyright © 2021 Texas Instruments Incorporated

8.4.4 High-Speed Downstream Port Electrical Compliance Test Mode

TUSB217A will detect HS compliance test fixture and enter downstream port high-speed eye diagram test mode. CD pin will be low and ENA_HS pin is asserted high when TUSB217A is in HS eye compliance test mode.

If RSTN pin is asserted low and de-asserted high while TUSB217A is operating in HS functional mode, TUSB217A may transition to HS eye compliance test mode and CD asserts low and ENA_HS remains high. When this occurs signal compensation is enabled.

8.4.5 Shutdown Mode

TUSB217A can be disabled when its RSTN pin is asserted low. DP, DM traces are continuous through the device in shutdown mode. The USB channel is still fully operational, but there is neither signal compensation, nor any indication from the CD pin as to the status of the channel.

Table 8-1. CD and ENA_HS Pins in Different Modes

MODE	CD	ENA_HS
Low-speed	HIGH	LOW
Full-speed	HIGH	LOW
High-speed	HIGH	HIGH
High-speed downstream port electrical test	LOW	HIGH
Shutdown	LOW	LOW

8.4.6 I^2C Mode

TUSB217A supports 100 KHz I2C for device configuration, status read back and test purposes. For detail electrical and functional specifications refer to I2C Bus Specification 2.1, 2001 – STANDARD MODE. This controller is enabled after SCL and SDA pins are sampled high shortly after return from shutdown. In this mode, the CSR can be accessed by I2C read/write transaction to 7-bit slave address 0x2C. It is advised to set CFG_ACTIVE bit before changing values. This halts the FSM, and reset it after all changes are made. This ensure proper startup into high-speed mode.

8.4.7 BC 1.2 Battery Charging Controller

Battery charging controller feature is always enabled in TUSB217A RWB and supports both CDP charging downstream port functionality and DCP dedicated charging port functionality depending on DCP/CDP pin. When DCP/CDP pin is high the BC 1.2 controller supports CDP mode and when DCP/CDP pin is low BC 1.2 controller supports DCP mode. DCP/CDP pin can be dynamically controlled. When host or hub is disabled DCP/CDP pin can be set low to support DCP mode and when host or hub is enabled DCP/CDP pin can be set to high to support CDP. Downstream VBUS should be toggled after the DCP/CDP pin change so BC 1.2 handshake starts over to indicate charging mode change.

DCP/CDP pin has an internal pull up resistor. When DCP/CDP pin is left unconnected the BC 1.2 controller will be in CDP mode.

Table 8-2. TUSB217A RWB Battery Charging Controller Modes

Pin 11 (DCP/CDP)	CDP	DCP
Low	NO	YES
High	YES	NO

Copyright © 2021 Texas Instruments Incorporated

8.5 TUSB217A Registers

Table 8-3 lists the memory-mapped registers for the TUSB217A registers. All register offset addresses not listed in Table 8-3 should be considered as reserved locations and the register contents should not be modified.

Table 8-3. TUSB217A Registers

Offset	Acronym	Register Name	Section
0x1	EDGE_BOOST	This register is setting EDGE BOOST level.	Go
0x3	CONFIGURATION	This register is selecting device mode.	Go
0xE	DC_BOOST	This register is setting DC BOOST level.	Go
0x25	RX_SEN	This register is setting RX Sensitivity level.	Go

Complex bit access types are encoded to fit into small table cells. Table 8-4 shows the codes that are used for access types in this section.

Table 8-4. TUSB217A Access Type Codes

Access Type	Code	Description
Read Type		
RH	H R	Set or cleared by hardware Read
Write Type		
W	W	Write
Reset or Default Value		
-n		Value after reset or the default value

8.5.1 EDGE_BOOST Register (Offset = 0x1) [reset = X]

EDGE_BOOST is shown in Figure 8-1 and described in Table 8-5.

Return to Summary Table.

This register is setting EDGE BOOST level.

Figure 8-1. EDGE_BOOST Register

7	6	5	4	3	2	1	0
ACB_LVL				RESERVED			
RH/W-X				RH/W-X			

Table 8-5. EDGE_BOOST Register Field Descriptions

Bit	Field	Type	Reset	Description
7-4	ACB_LVL	RH/W	X	XXXXb (sampled at startup from BOOST pin) 0000b to 1111b range 0x0 = BOOST PIN LEVEL 0 (lowest edge boost setting) 0x3 = BOOST PIN LEVEL 1 0x6 = BOOST PIN LEVEL 2 0xA = BOOST PIN LEVEL 3 0xF = (highest edge boost setting)
3-0	RESERVED	RH/W	X	These bits are reserved bits and set by hardware at reset. When this register is modified the software should first read these reserved bits and rewrite with the same values

Copyright © 2021 Texas Instruments Incorporated

8.5.2 CONFIGURATION Register (Offset = 0x3) [reset = X]

CONFIGURATION is shown in Figure 8-2 and described in Table 8-6.

Return to Summary Table.

This register is selecting device mode.

Figure 8-2. CONFIGURATION Register

7	6	5	4	3	2	1	0
RESERVED							CFG_ACTIVE
RH/W-X							RH/W-0x1

Table 8-6. CONFIGURATION Register Field Descriptions

Bit	Field	Type	Reset	Description
7-1	RESERVED	RH/W	X	These bits are reserved bits and set by hardware at reset. When this register is modified the software should first read these reserved bits and rewrite with the same values
0	CFG_ACTIVE	RH/W	0x1	Configuration mode After reset, if I2C mode is true (SCL and SDA are both pulled high) set the bit to get into configuration mode and clear to return to normal mode. 0x0 = NORMAL MODE 0x1 = CONFIGURATION MODE

8.5.3 DC_BOOST Register (Offset = 0xE) [reset = X]

DC_BOOST is shown in Figure 8-3 and described in Table 8-7.

Return to Summary Table.

This register is setting DC BOOST level.

Figure 8-3. DC_BOOST Register

7	6	5	4	3	2	1	0
RESERVED				DCB_LVL			
RH/W-X				RH/W-X			

Table 8-7. DC_BOOST Register Field Descriptions

Bit	Field	Type	Reset	Description
7-4	RESERVED	RH/W	X	These bits are reserved bits and set by hardware at reset. When this register is modified the software should first read these reserved bits and rewrite with the same values
3-0	DCB_LVL	RH/W	X	XXXXb (sampled at startup from BOOST pin) 0000b to 1111b range 0x0 = BOOST PIN LEVEL 0 (lowest dc boost setting) 0x2 = BOOST PIN LEVEL 1 and 2 0x6 = BOOST PIN LEVEL 3 0xF = (highest dc boost setting)

Copyright © 2021 Texas Instruments Incorporated

8.5.4 RX_SEN Register (Offset = 0x25) [reset = X]

RX_SEN is shown in Figure 8-4 and described in Table 8-8.

Return to Summary Table.

This register is setting RX Sensitivity level.

Figure 8-4. RX_SEN Register

7	6	5	4	3	2	1	0
RX_SEN							
RH/W-X							

Table 8-8. RX_SEN Register Field Descriptions

Bit	Field	Type	Reset	Description
7-0	RX_SEN	RH/W	X	XXXXb (sampled at startup from RX_SEN pin) 00000000b to 11111111b range 0x0 = RX_SEN LEVEL LOW 0x33 = RX_SEN LEVEL MID 0x66 = RX_SEN LEVEL HIGH 0xFF = (highest setting)

Copyright © 2021 Texas Instruments Incorporated

9 Application and Implementation

Note

Information in the following applications sections is not part of the TI component specification, and TI does not warrant its accuracy or completeness. TI's customers are responsible for determining suitability of components for their purposes, as well as validating and testing their design implementation to confirm system functionality.

9.1 Application Information

The purpose of the TUSB217A is to re-store the signal integrity of a USB High-speed channel up to the USB connector. The loss in signal quality stems from reduced channel bandwidth due to high loss PCB trace and other components that contribute a capacitive load. This can cause the channel to fail the USB near end eye mask. Proper use of the TUSB217A can help to pass this eye mask.

A secondary purpose is to use the CD pin of the TUSB217A to control other blocks on the customer platform, if so desired.

9.2 Typical Application

A typical application for TUSB217A with dynamic mode change between DCP and CDP is shown in Figure 9-1. BC 1.2 controller mode will be based on host/hub active state in this application. When host/hub is not active the controller will be in DCP mode and when the host/hub is active the controller will be in CDP mode. Downstream VBUS needs to be toggled by the power controller to change advertisement and for portable device to re-detect the BC 1.2 controller charging mode. In this setup, D2P and D2M face the USB connector while D1P and D1M face the USB host. The orientation may be reversed (that is, D2 faces transceiver and D1 faces connector).

Copyright © 2021 Texas Instruments Incorporated

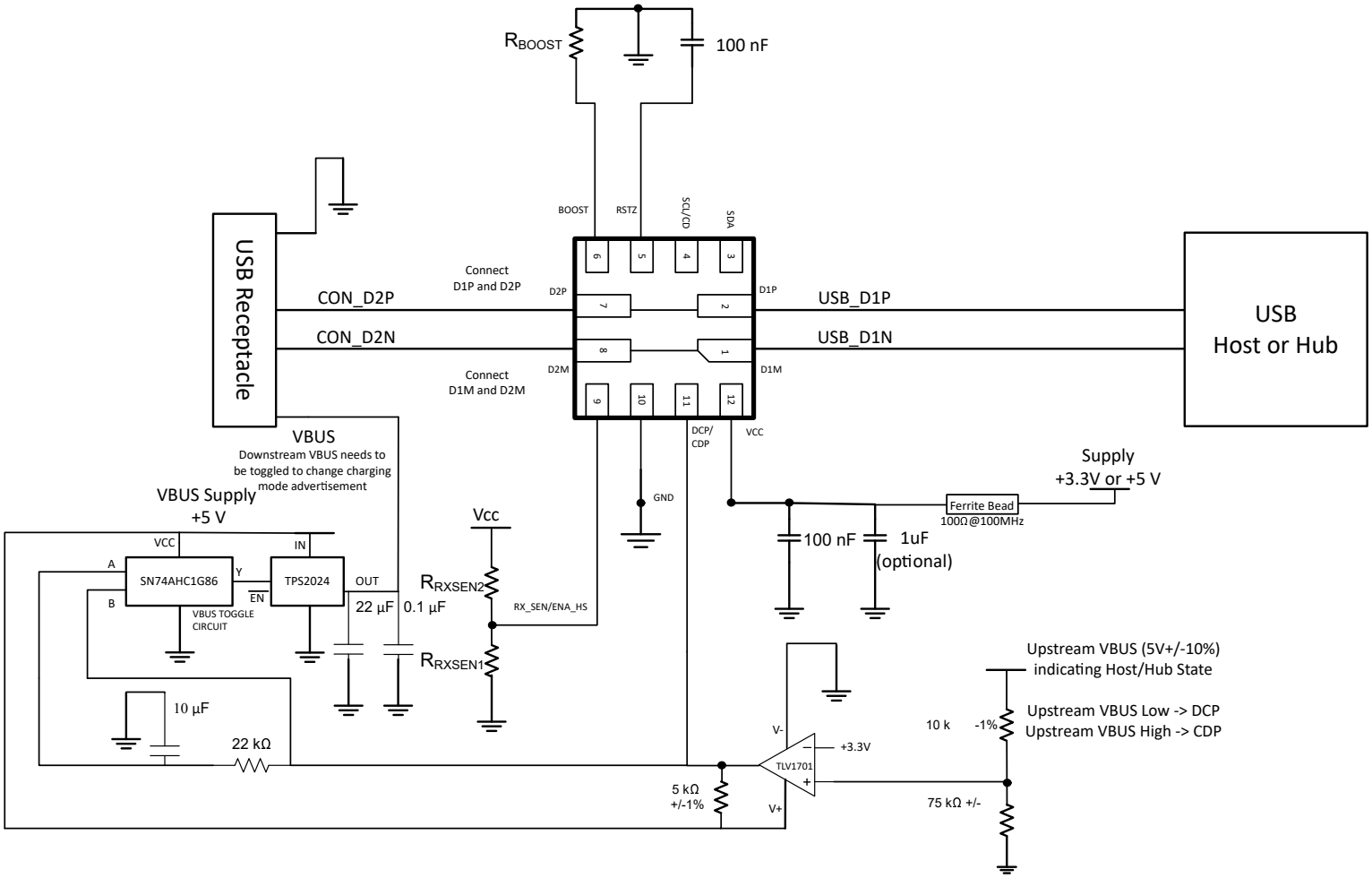

Copyright © 2021, Texas Instruments Incorporated

Figure 9-1. TUSB217A: A Reference Schematic (Design Example with DCP/CDP Dynamic Switching). Downstream VBUS Needs to be Toggled if Upstream VBUS State Changes for BC 1.2 Controller to Change DCP/CDP Advertisement.

Copyright © 2021 Texas Instruments Incorporated

9.2.1 Design Requirements

TUSB217A requires a valid reset signal as described in the *Power Supply Recommendations* section. The capacitor at RSTN pin is not required if a micro controller drives the RSTN pin according to recommendations.

For this design example, use the parameters shown in Table 9-1, Table 9-2 and Table 9-3.

Table 9-1. Design Parameters for 5-V Supply With High Loss System

PARAMETER				VALUE[1]
V_{CC}				5 V ±10%
I^2C support required in system (Yes/No)				No
Edge and DC Boost		**R_{BOOST}**	**BOOST Level**	Boost Level 1: R_{BOOST} = 1.8 kΩ
		0-Ω	0	
		1.8 kΩ ±1%	1	
		3.6 kΩ ± 1%	2	
		Do Not Install (DNI)	3	
RX Sensitivity	**R_{RXSEN1}**	**R_{RXSEN2}**	**RX_SEN Level**	High RX Sensitivity Level: R_{RXSEN1} = 37.5 kΩ R_{RXSEN2} = 12.5 kΩ
	22 kΩ - 40 kΩ (27 kΩ typical)	Do Not Install (DNI)	Low	
	Do Not Install (DNI)	Do Not Install (DNI)	Medium	
	37.5 kΩ[2]	12.5 kΩ	High	

(1) These parameters are starting values for a high loss system. Further tuning might be required based on specific host or device as well as cable length and loss profile. These settings are not specific to a 5 V supply system could be applicable to 3.3 V supply system as well.
(2) This resistor is needed for a 5 V supply to divide the voltage down so the RX_SEN pin voltage does not exceed 5.0 V.

Table 9-2. Design Parameters for 3.3-V Supply With Low to Medium Loss System

PARAMETER				VALUE[1]
V_{CC}				3.3 V ±10%
I^2C support required in system (Yes/No)				No
Edge and DC Boost		**R_{BOOST}**	**BOOST Level**	Boost Level 0: R_{BOOST} = 0-Ω
		0-Ω	0	
		1.8 kΩ ±1%	1	
		3.6 kΩ ±1%	2	
		Do Not Install (DNI)	3	
RX Sensitivity	**R_{RXSEN1}**	**R_{RXSEN2}**	**RX_SEN Level**	Medium RX Sensitivity Level: R_{RXSEN1} = DNI R_{RXSEN2} = DNI
	22 kΩ – 40 kΩ (27 kΩ typical)	Do Not Install (DNI)	Low	
	Do Not Install (DNI)	Do Not Install (DNI)	Medium	
	Do Not Install (DNI)	22 kΩ – 40 kΩ (27 kΩ typical)	High	

(1) These parameters are starting values for a low to medium loss system. Further tuning might be required based on specific host or device as well as cable length and loss profile. These settings are not specific to a 3.3 V supply system could be applicable to 5 V supply system as well.

Copyright © 2021 Texas Instruments Incorporated

Table 9-3. Design Parameters for 2.3-V to 4.3-V VBAT Supply With Low to Medium Loss System

PARAMETER				VALUE[1]
V_{CC}				2.3 V to 4.3V
I^2C support required in system (Yes/No)				No
Edge and DC Boost		R_{BOOST}	BOOST Level	Boost Level 0: R_{BOOST} = 0-Ω
		0-Ω	0	
		1.8 kΩ ±1%	1	
		3.6 kΩ ±1%	2	
		Do Not Install (DNI)	3	
RX Sensitivity	R_{RXSEN1}	R_{RXSEN2}	RX_SEN Level	Medium RX Sensitivity Level: R_{RXSEN1} = DNI R_{RXSEN2} = DNI
	22 kΩ – 40 kΩ (27 kΩ typical)	Do Not Install (DNI)	Low	
	Do Not Install (DNI)	Do Not Install (DNI)	Medium	
	37.5 kΩ[2]	12.5 kΩ	High	

(1) These parameters are starting values for a low to medium loss system. Further tuning might be required based on specific host or device as well as cable length and loss profile. These settings are not specific to a 2.3 V – 4.3 V supply system could be applicable to 5 V supply system as well.
(2) This resistor is needed for a VBAT supply (2.3 V – 4.3 V) to divide the voltage down so the RX_SEN pin voltage does not exceed 5.0 V.

9.2.2 Detailed Design Procedure

The ideal BOOST setting is dependent upon the signal chain loss characteristics of the target platform. The recommendation is to start with BOOST level 0, and then increment to BOOST level 1, and so on. Same applies to the RX sensitivity setting where it is recommended to plan for the required pads or connections to change boost settings, but to start with RX sensitivity level Low.

In order for the TUSB217A to recognize any change to the BOOST setting, the RSTN pin must be toggled. This is because the BOOST pin is latched on power up and the pin is ignored thereafter.

Note

The TUSB217A compensates for extra attenuation in the signal path according to the configuration of the RX_SEN pin. This maximum recommended voltage for this pin is 5 V when selecting the highest RX sensitivity level.

Placement of the device is also dependent on the application goal. Table 9-4 summarizes our recommendations.

Table 9-4. Platform Placement Guideline

PLATFORM GOAL	SUGGESTED TUSB217A PLACEMENT
Pass USB Near End Mask at the receptacle	Close to measurement point (connector)
Pass USB Far End Eye Mask at the plug	Close to USB PHY
Cascade multiple TUSB217As to improve device enumeration	Midway between each USB interconnect

Copyright © 2021 Texas Instruments Incorporated

Table 9-5. Table of Recommended Settings

BOOST and RX_SEN settings [1] for channel loss		
Pre-channel cable length (Between USB PHY and TUSB217A)	**BOOST**	**RX_SEN**
0-3 meter	Level 0	Medium or High
2-5 meter	Level 1	Medium or High
Post-channel cable length (Between TUSB217A and inter-connect)	**BOOST**	**RX_SEN**
0-2 meter	Level 0	Medium or High
1-4 meter	Level 1	Medium or High

(1) These parameters are starting values for different cable lengths. Further tuning might be required based on specific host or device as well as cable length and loss profile.

9.2.2.1 Test Procedure to Construct USB High-speed Eye Diagram

Note

USB-IF certification tests for High-speed eye masks require the *mandated use* of the USB-IF developed test fixtures. These test fixtures do not require the use of oscilloscope probes. Instead they use SMA cables. More information can be found at the USB-IF Compliance Updates Page. It is located under the *Electrical Specifications* section, ID 86 dated March 2013.

The following procedure must be followed before using any oscilloscope compliance software to construct a USB High-speed Eye Mask:

9.2.2.1.1 For a Host Side Application

1. Configure the TUSB217A to the desired BOOST setting.
2. Power on (or toggle the RSTN pin if already powered on) the TUSB217A.
3. Using SMA cables, connect the oscilloscope and the USB-IF host-side test fixture to the TUSB217A.
4. Enable the host to transmit USB TEST_PACKET.
5. Execute the oscilloscope USB compliance software.
6. Repeat the above steps in order to retest TUSB217A with a different BOOST setting (must reset to change).

9.2.2.1.2 For a Device Side Application

1. Configure the TUSB217A to the desired BOOST setting.
2. Power on (or toggle the RSTN pin if already powered on) the TUSB217A.
3. Connect a USB host, the USB-IF device-side test fixture, and USB device to the TUSB217A. Ensure that the USB-IF device test fixture is configured to the ‘INIT’ position.
4. Allow the host to enumerate the device.
5. Enable the device to transmit USB TEST_PACKET.
6. Using SMA cables, connect the oscilloscope to the USB-IF device-side test fixture and ensure that the device-side test fixture is configured to the ‘TEST’ position.
7. Execute the oscilloscope USB compliance software.
8. Repeat the above steps in order to re-test TUSB217A with a different BOOST setting (must reset to change).

Copyright © 2021 Texas Instruments Incorporated

9.2.3 Application Curves

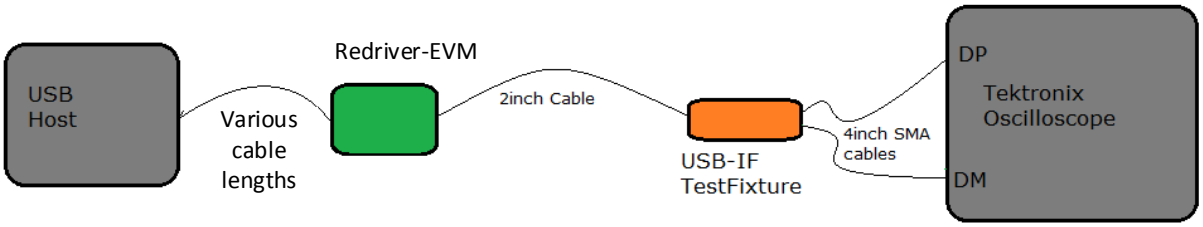

Figure 9-2. Near End Eye Measurement Set-Up With Pre-Channel Cable

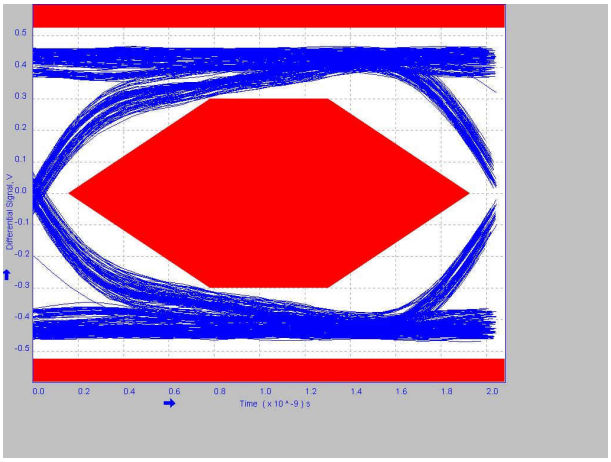

Figure 9-3. 2 Meter Pre-Channel Without TUSB217A

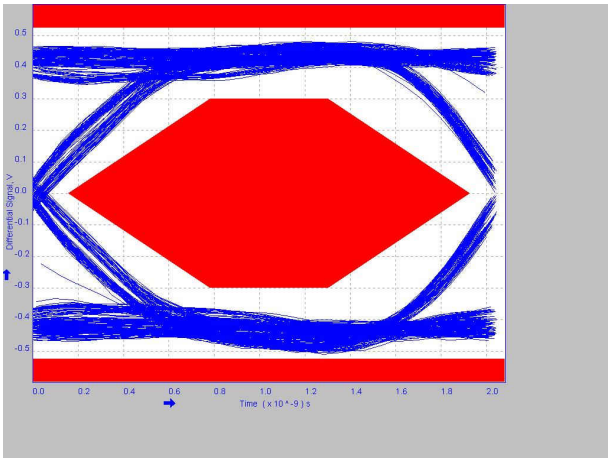

Figure 9-4. 2 Meter Pre-Channel With TUSB217A BOOST=1 RX_SEN=MED

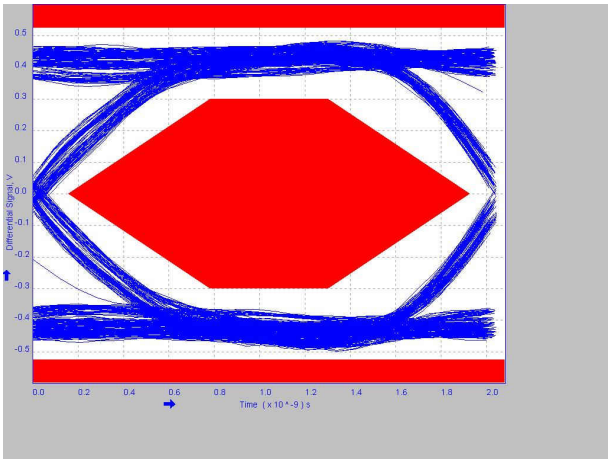

Figure 9-5. 2 Meter Pre-Channel With TUSB217A BOOST=0 RX_SEN=HIGH

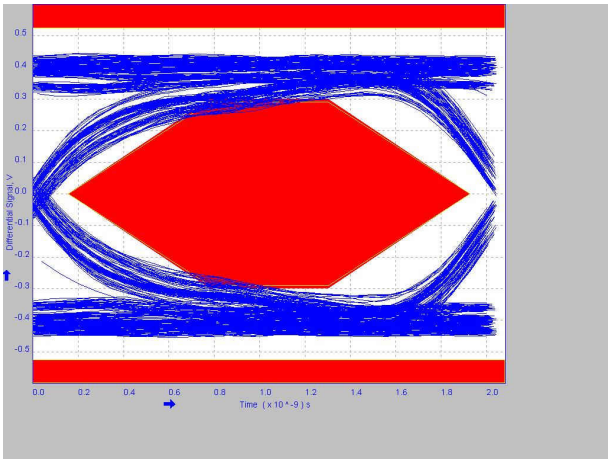

Figure 9-6. 3 Meter Pre-Channel Without TUSB217A

Copyright © 2021 Texas Instruments Incorporated

9.2.3 Application Curves (continued)

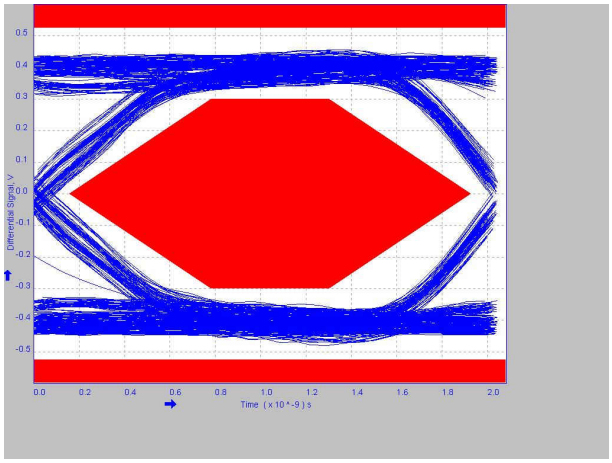

Figure 9-7. 3 Meter Pre-Channel With TUSB217A BOOST=0 RX_SEN=HIGH

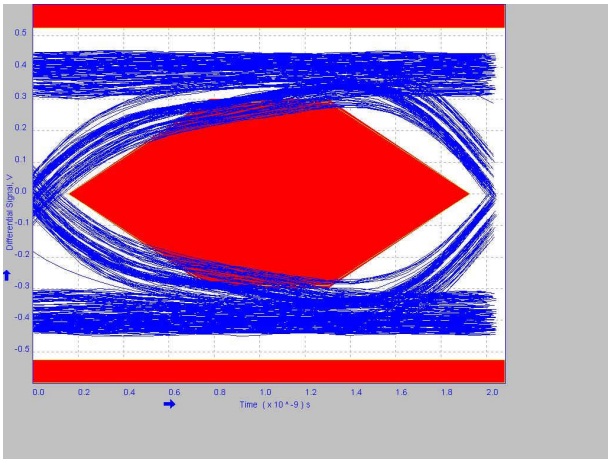

Figure 9-8. 5 Meter Without TUSB217A

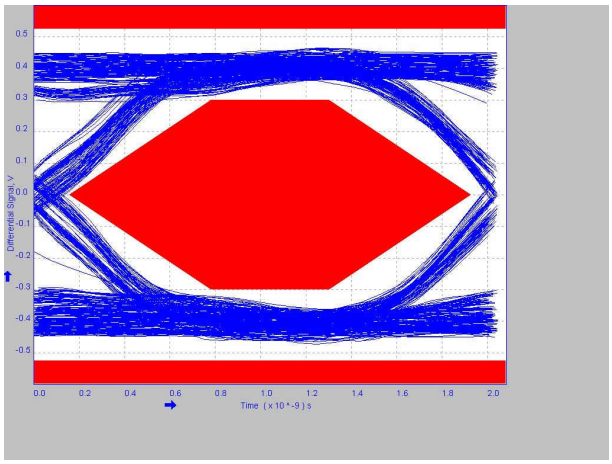

Figure 9-9. 5 Meter Pre-Channel With TUSB217A BOOST=1 RX_SEN=MED

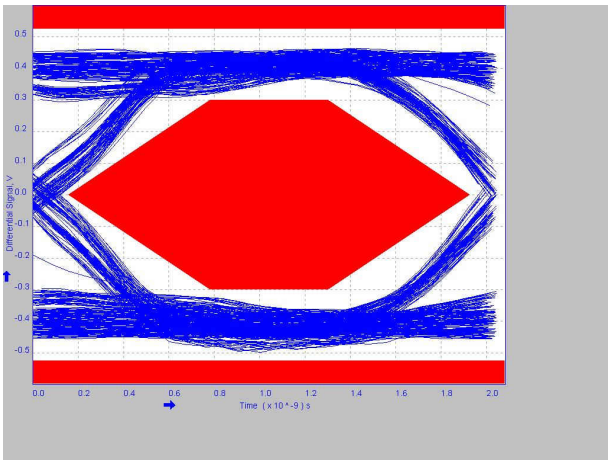

Figure 9-10. 5 Meter Pre-Channel With TUSB217A BOOST=2 RX_SEN=MED

9.2.3 Application Curves

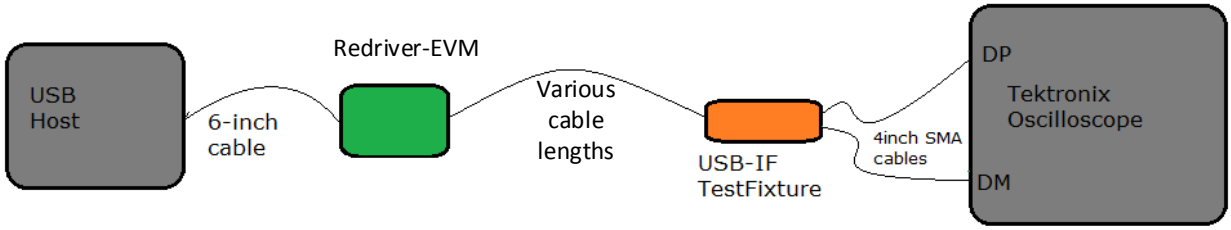

Figure 9-11. Near End Eye Measurement Set-Up With Post-Channel Cable

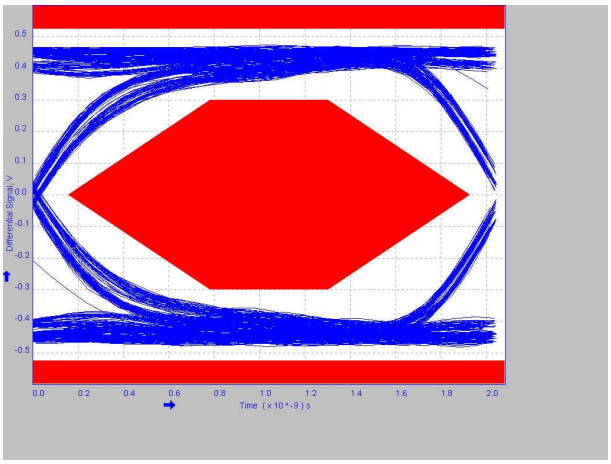

Figure 9-12. 6 Inches Post Channel Without TUSB217A

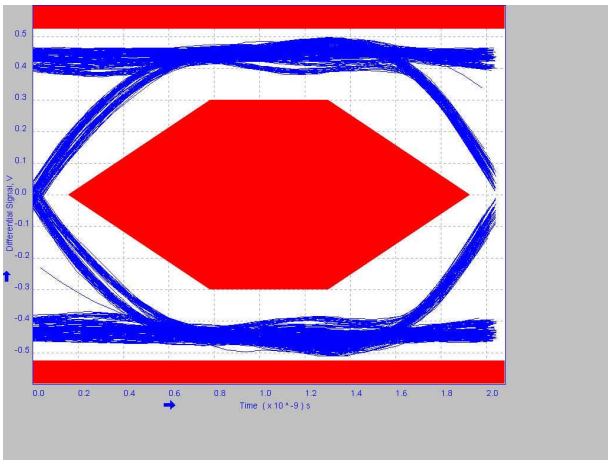

Figure 9-13. 6 Inches Post-Channel With TUSB217A BOOST=0 RX_SEN=HIGH

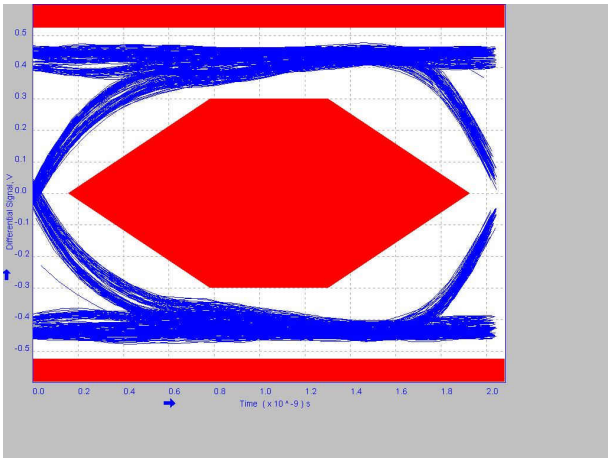

Figure 9-14. 1 Meter Post-Channel Without TUSB217A

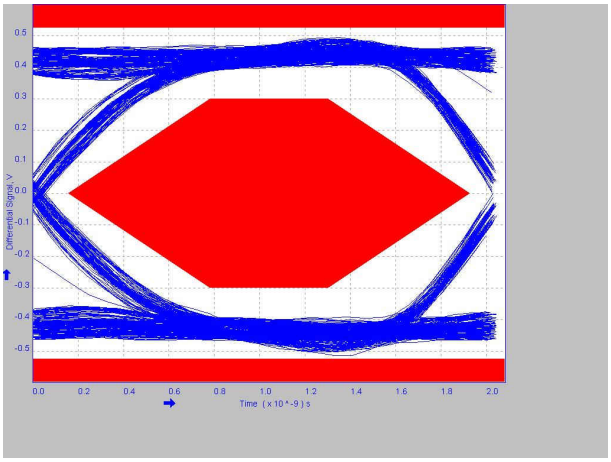

Figure 9-15. 1 Meter Post-Channel With TUSB217A BOOST=0 RX_SEN=MED

Copyright © 2021 Texas Instruments Incorporated

9.2.3 Application Curves (continued)

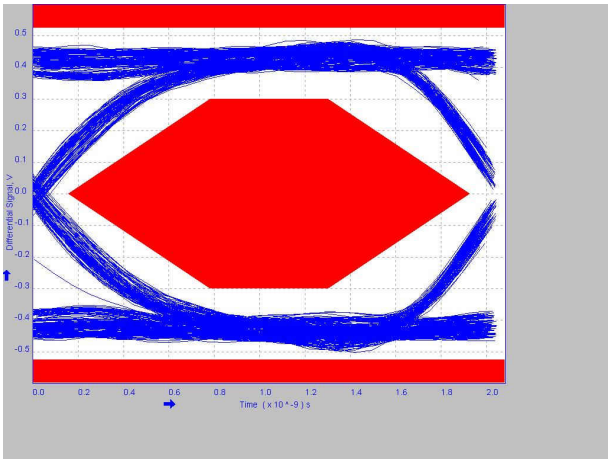

Figure 9-16. 1 Meter Post-Channel With TUSB217A BOOST=0 RX_SEN=HIGH

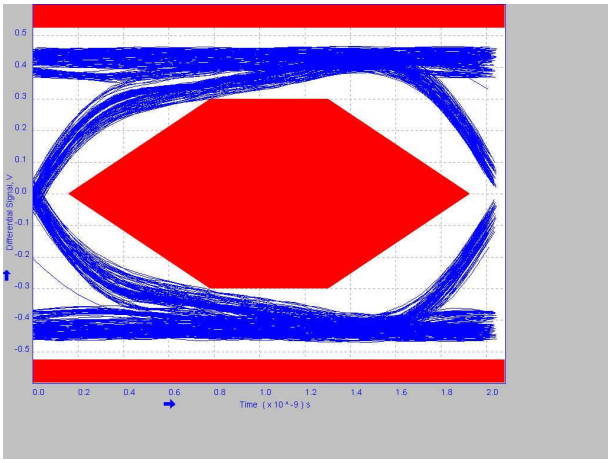

Figure 9-17. 2 Meter Post-Channel Without TUSB217A

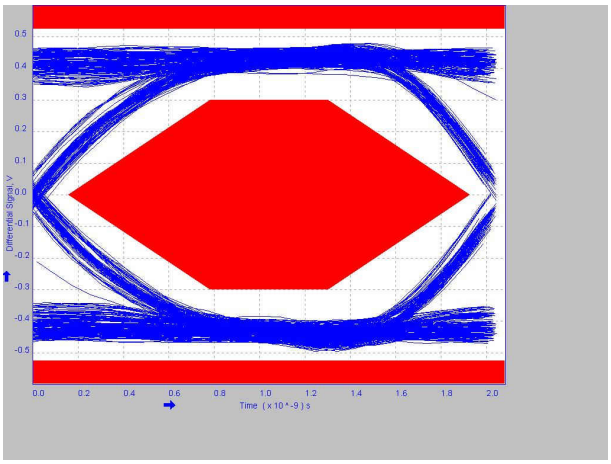

Figure 9-18. 2 Meter Post-Channel With TUSB217A BOOST=1 RX_SEN=MED

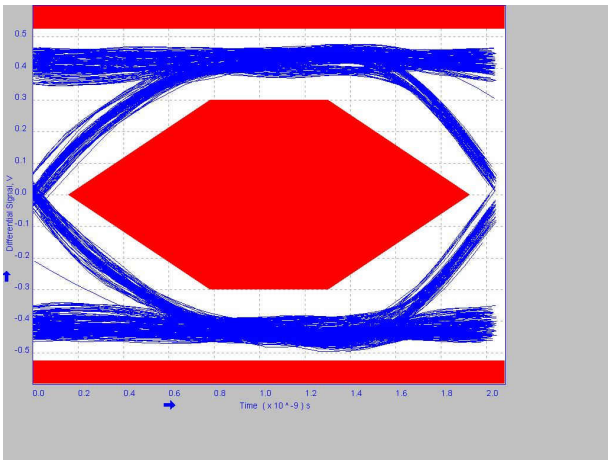

Figure 9-19. 2 Meter Post-Channel With TUSB217A BOOST=1 RX_SEN=HIGH

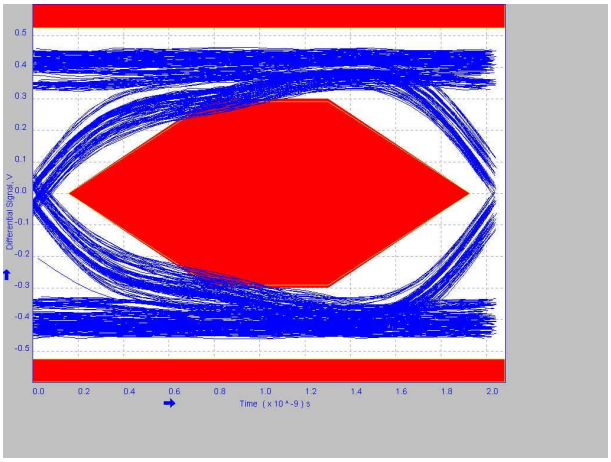

Figure 9-20. 4 Meter Post-Channel Without TUSB217A

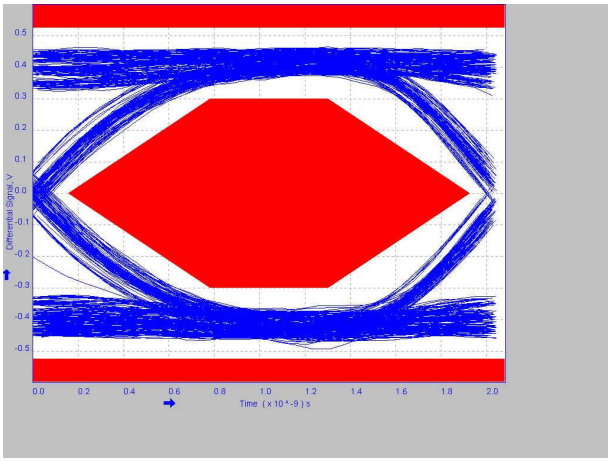

Figure 9-21. 4 Meter Post-Channel With TUSB217A BOOST=2 RX_SEN=MED

10 Power Supply Recommendations

On power up, the interaction of the RSTN pin and power on ramp could result in digital circuits not being set correctly. The device should not be enabled until the power on ramp has settled to minimum recommended supply voltage or higher to ensure a correct power on reset of the digital circuitry. If RSTN cannot be held low by microcontroller or other circuitry until the power on ramp has settled, then an external capacitor from the RSTN pin to GND is required to hold the device in the low power reset state.

The RC time constant should be larger than five times of the power on ramp time (0 to V_{CC}). With a typical internal pullup resistance of 500 kΩ, the recommended minimum external capacitance is calculated as:

$$[\text{Ramp Time} \times 5] \div [500\ \text{k}\Omega] \quad (1)$$

11 Layout

11.1 Layout Guidelines

Although the land pattern has matched trace width to pad width, optimal impedance control is based on the user's own PCB stack-up. The recommendation is to maintain 90 Ω differential routing underneath the device.

11.2 Layout Example

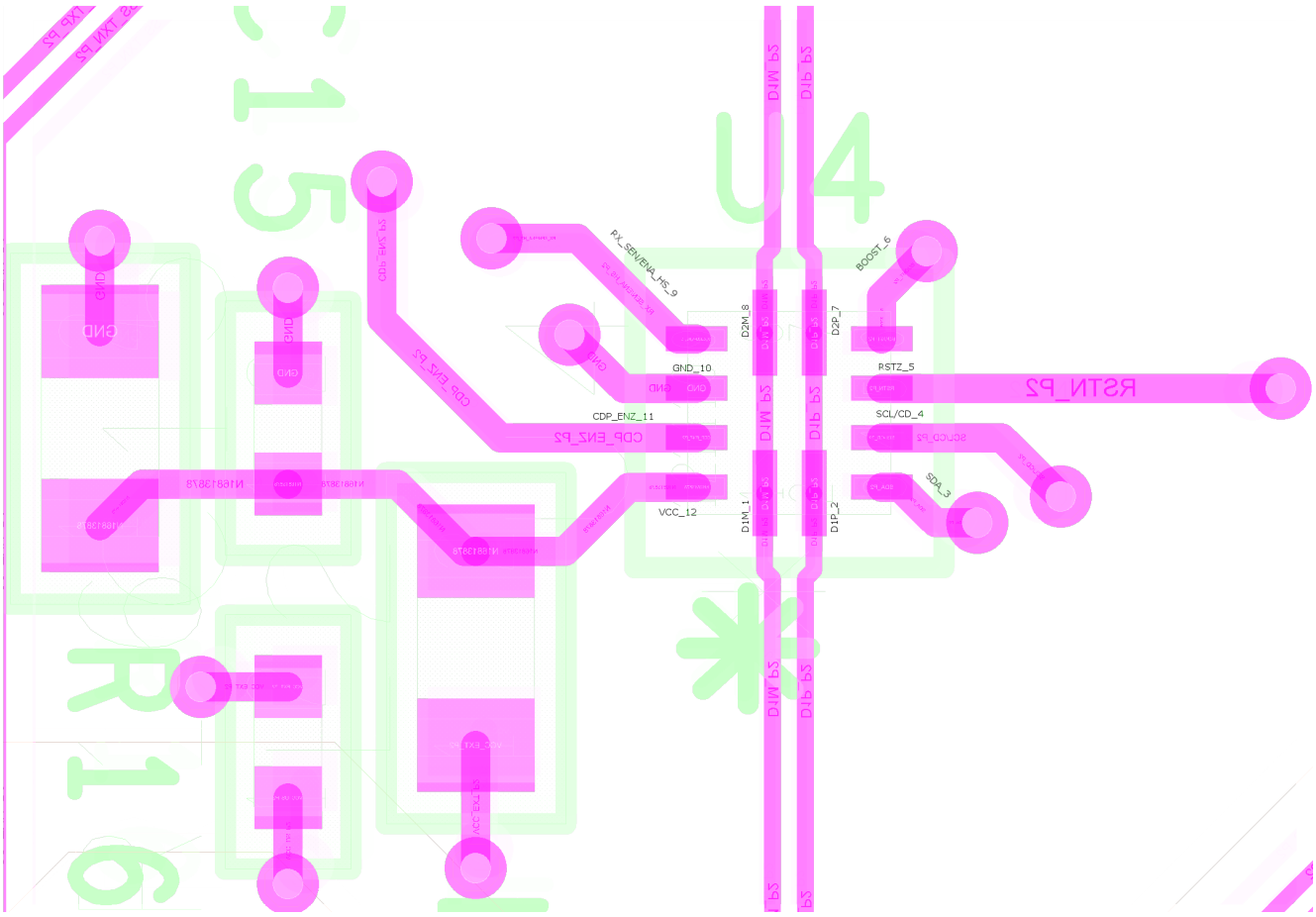

Figure 11-1. Layout Example

Copyright © 2021 Texas Instruments Incorporated

12 Device and Documentation Support

12.1 Receiving Notification of Documentation Updates

To receive notification of documentation updates, navigate to the device product folder on ti.com. Click on *Subscribe to updates* to register and receive a weekly digest of any product information that has changed. For change details, review the revision history included in any revised document.

12.2 Support Resources

TI E2E™ support forums are an engineer's go-to source for fast, verified answers and design help — straight from the experts. Search existing answers or ask your own question to get the quick design help you need.

Linked content is provided "AS IS" by the respective contributors. They do not constitute TI specifications and do not necessarily reflect TI's views; see TI's Terms of Use.

12.3 Trademarks

TI E2E™ is a trademark of Texas Instruments.
All trademarks are the property of their respective owners.

12.4 Electrostatic Discharge Caution

This integrated circuit can be damaged by ESD. Texas Instruments recommends that all integrated circuits be handled with appropriate precautions. Failure to observe proper handling and installation procedures can cause damage.

ESD damage can range from subtle performance degradation to complete device failure. Precision integrated circuits may be more susceptible to damage because very small parametric changes could cause the device not to meet its published specifications.

12.5 Glossary

TI Glossary	This glossary lists and explains terms, acronyms, and definitions.

13 Mechanical, Packaging, and Orderable Information

The following pages include mechanical, packaging, and orderable information. This information is the most current data available for the designated devices. This data is subject to change without notice and revision of this document. For browser-based versions of this data sheet, refer to the left-hand navigation.

Copyright © 2021 Texas Instruments Incorporated

PACKAGING INFORMATION

Orderable part number	Status (1)	Material type (2)	Package | Pins	Package qty | Carrier	RoHS (3)	Lead finish/ Ball material (4)	MSL rating/ Peak reflow (5)	Op temp (°C)	Part marking (6)
TUSB217AIRWBR	Active	Production	X2QFN (RWB) | 12	3000 | LARGE T&R	Yes	NIPDAU	Level-2-260C-1 YEAR	-40 to 85	7A
TUSB217AIRWBR.A	Active	Production	X2QFN (RWB) | 12	3000 | LARGE T&R	Yes	NIPDAU	Level-2-260C-1 YEAR	-40 to 85	7A
TUSB217AIRWBT	Active	Production	X2QFN (RWB) | 12	250 | SMALL T&R	Yes	NIPDAU	Level-2-260C-1 YEAR	-40 to 85	7A
TUSB217AIRWBT.A	Active	Production	X2QFN (RWB) | 12	250 | SMALL T&R	Yes	NIPDAU	Level-2-260C-1 YEAR	-40 to 85	7A
TUSB217ARWBR	Active	Production	X2QFN (RWB) | 12	3000 | LARGE T&R	Yes	NIPDAU	Level-2-260C-1 YEAR	0 to 70	7A
TUSB217ARWBR.A	Active	Production	X2QFN (RWB) | 12	3000 | LARGE T&R	Yes	NIPDAU	Level-2-260C-1 YEAR	0 to 70	7A
TUSB217ARWBT	Active	Production	X2QFN (RWB) | 12	250 | SMALL T&R	Yes	NIPDAU	Level-2-260C-1 YEAR	0 to 70	7A
TUSB217ARWBT.A	Active	Production	X2QFN (RWB) | 12	250 | SMALL T&R	Yes	NIPDAU	Level-2-260C-1 YEAR	0 to 70	7A

(1) **Status:** For more details on status, see our product life cycle.

(2) **Material type:** When designated, preproduction parts are prototypes/experimental devices, and are not yet approved or released for full production. Testing and final process, including without limitation quality assurance, reliability performance testing, and/or process qualification, may not yet be complete, and this item is subject to further changes or possible discontinuation. If available for ordering, purchases will be subject to an additional waiver at checkout, and are intended for early internal evaluation purposes only. These items are sold without warranties of any kind.

(3) **RoHS values:** Yes, No, RoHS Exempt. See the TI RoHS Statement for additional information and value definition.

(4) **Lead finish/Ball material:** Parts may have multiple material finish options. Finish options are separated by a vertical ruled line. Lead finish/Ball material values may wrap to two lines if the finish value exceeds the maximum column width.

(5) **MSL rating/Peak reflow:** The moisture sensitivity level ratings and peak solder (reflow) temperatures. In the event that a part has multiple moisture sensitivity ratings, only the lowest level per JEDEC standards is shown. Refer to the shipping label for the actual reflow temperature that will be used to mount the part to the printed circuit board.

(6) **Part marking:** There may be an additional marking, which relates to the logo, the lot trace code information, or the environmental category of the part.

Multiple part markings will be inside parentheses. Only one part marking contained in parentheses and separated by a "~" will appear on a part. If a line is indented then it is a continuation of the previous line and the two combined represent the entire part marking for that device.

Important Information and Disclaimer: The information provided on this page represents TI's knowledge and belief as of the date that it is provided. TI bases its knowledge and belief on information provided by third parties, and makes no representation or warranty as to the accuracy of such information. Efforts are underway to better integrate information from third parties. TI has taken and continues to take reasonable steps to provide representative and accurate information but may not have conducted destructive testing or chemical analysis on incoming materials and chemicals. TI and TI suppliers consider certain information to be proprietary, and thus CAS numbers and other limited information may not be available for release.

In no event shall TI's liability arising out of such information exceed the total purchase price of the TI part(s) at issue in this document sold by TI to Customer on an annual basis.

OTHER QUALIFIED VERSIONS OF TUSB217A :

- Automotive : TUSB217A-Q1

NOTE: Qualified Version Definitions:

- Automotive - Q100 devices qualified for high-reliability automotive applications targeting zero defects

TAPE AND REEL INFORMATION

REEL DIMENSIONS

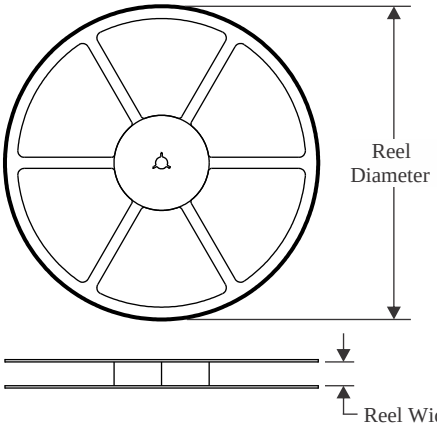

TAPE DIMENSIONS

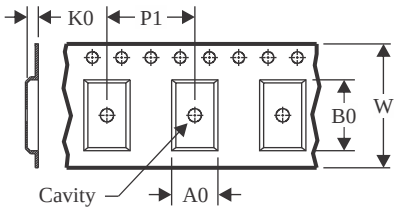

A0	Dimension designed to accommodate the component width
B0	Dimension designed to accommodate the component length
K0	Dimension designed to accommodate the component thickness
W	Overall width of the carrier tape
P1	Pitch between successive cavity centers

QUADRANT ASSIGNMENTS FOR PIN 1 ORIENTATION IN TAPE

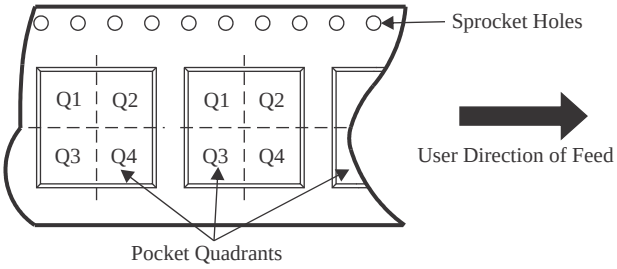

*All dimensions are nominal

Device	Package Type	Package Drawing	Pins	SPQ	Reel Diameter (mm)	Reel Width W1 (mm)	A0 (mm)	B0 (mm)	K0 (mm)	P1 (mm)	W (mm)	Pin1 Quadrant
TUSB217AIRWBR	X2QFN	RWB	12	3000	180.0	9.5	1.8	1.8	0.45	4.0	8.0	Q1
TUSB217AIRWBR	X2QFN	RWB	12	3000	180.0	8.4	1.8	1.8	0.48	4.0	8.0	Q1
TUSB217AIRWBT	X2QFN	RWB	12	250	180.0	8.4	1.8	1.8	0.48	4.0	8.0	Q1
TUSB217AIRWBT	X2QFN	RWB	12	250	180.0	9.5	1.8	1.8	0.45	4.0	8.0	Q1
TUSB217ARWBR	X2QFN	RWB	12	3000	180.0	8.4	1.8	1.8	0.48	4.0	8.0	Q1
TUSB217ARWBR	X2QFN	RWB	12	3000	180.0	9.5	1.8	1.8	0.45	4.0	8.0	Q1
TUSB217ARWBT	X2QFN	RWB	12	250	180.0	8.4	1.8	1.8	0.48	4.0	8.0	Q1
TUSB217ARWBT	X2QFN	RWB	12	250	180.0	9.5	1.8	1.8	0.45	4.0	8.0	Q1

TAPE AND REEL BOX DIMENSIONS

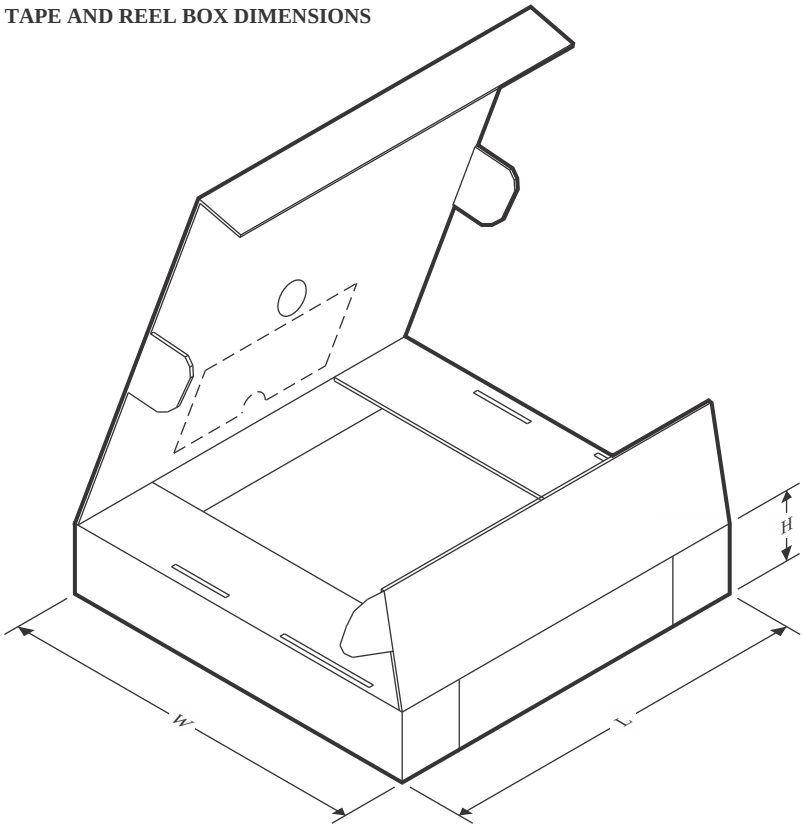

*All dimensions are nominal

Device	Package Type	Package Drawing	Pins	SPQ	Length (mm)	Width (mm)	Height (mm)
TUSB217AIRWBR	X2QFN	RWB	12	3000	189.0	185.0	36.0
TUSB217AIRWBR	X2QFN	RWB	12	3000	210.0	185.0	35.0
TUSB217AIRWBT	X2QFN	RWB	12	250	210.0	185.0	35.0
TUSB217AIRWBT	X2QFN	RWB	12	250	189.0	185.0	36.0
TUSB217ARWBR	X2QFN	RWB	12	3000	210.0	185.0	35.0
TUSB217ARWBR	X2QFN	RWB	12	3000	189.0	185.0	36.0
TUSB217ARWBT	X2QFN	RWB	12	250	210.0	185.0	35.0
TUSB217ARWBT	X2QFN	RWB	12	250	189.0	185.0	36.0

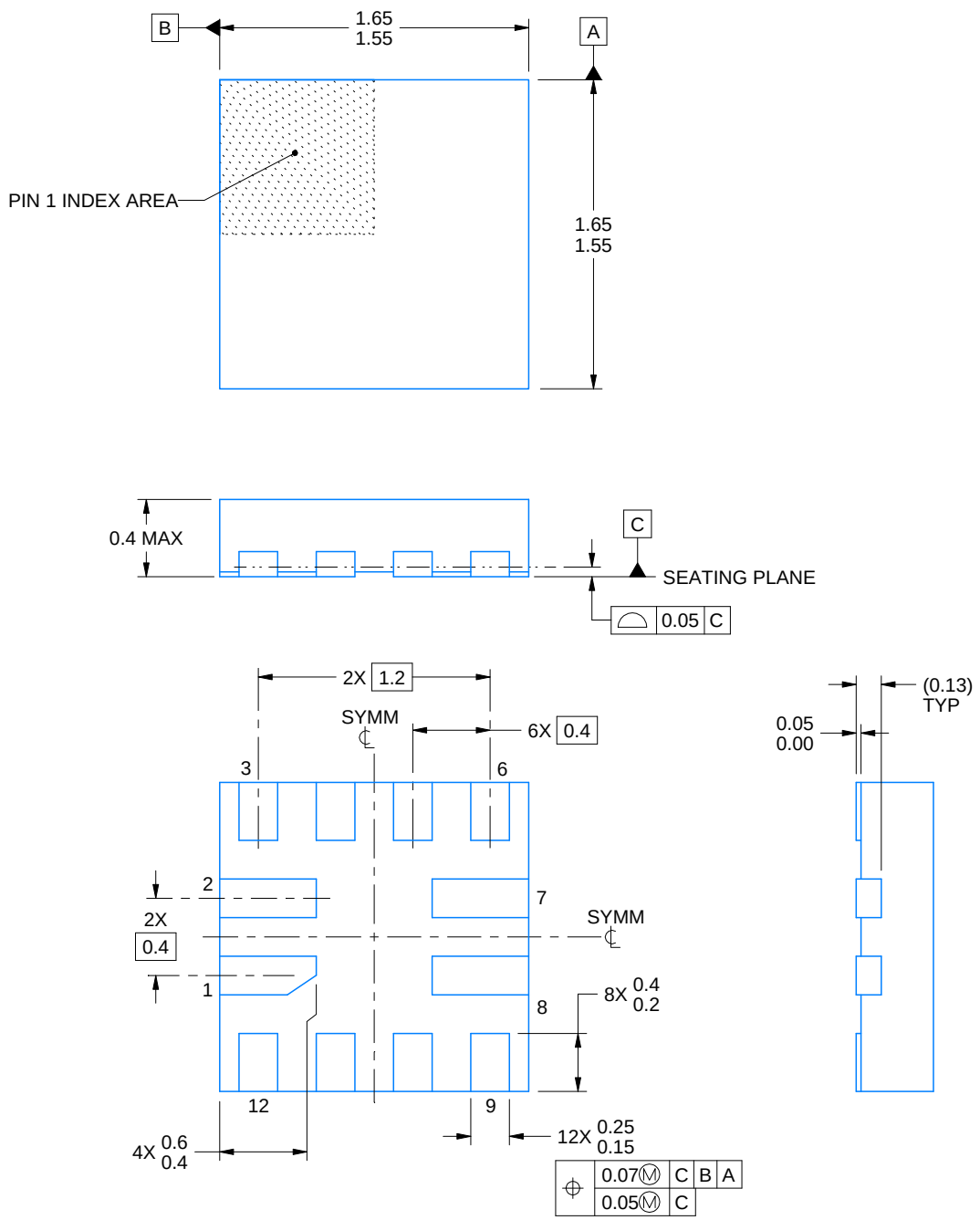

NOTES:

1. All linear dimensions are in millimeters. Any dimensions in parenthesis are for reference only. Dimensioning and tolerancing per ASME Y14.5M.
2. This drawing is subject to change without notice.

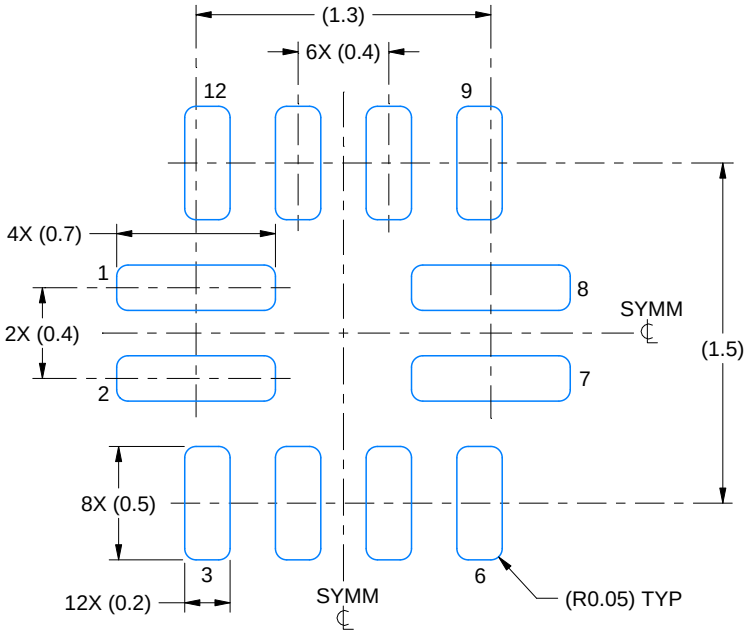

LAND PATTERN EXAMPLE
EXPOSED METAL SHOWN
SCALE:30X

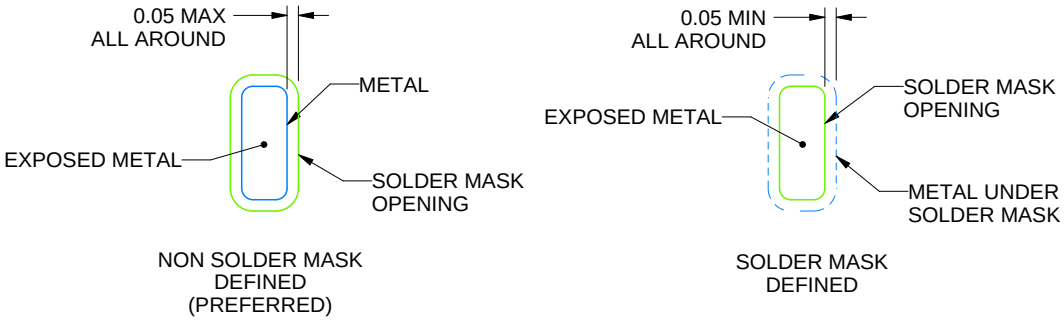

SOLDER MASK DETAILS

4221631/B 07/2017

NOTES: (continued)

3. For more information, see Texas Instruments literature number SLUA271 (www.ti.com/lit/slua271).

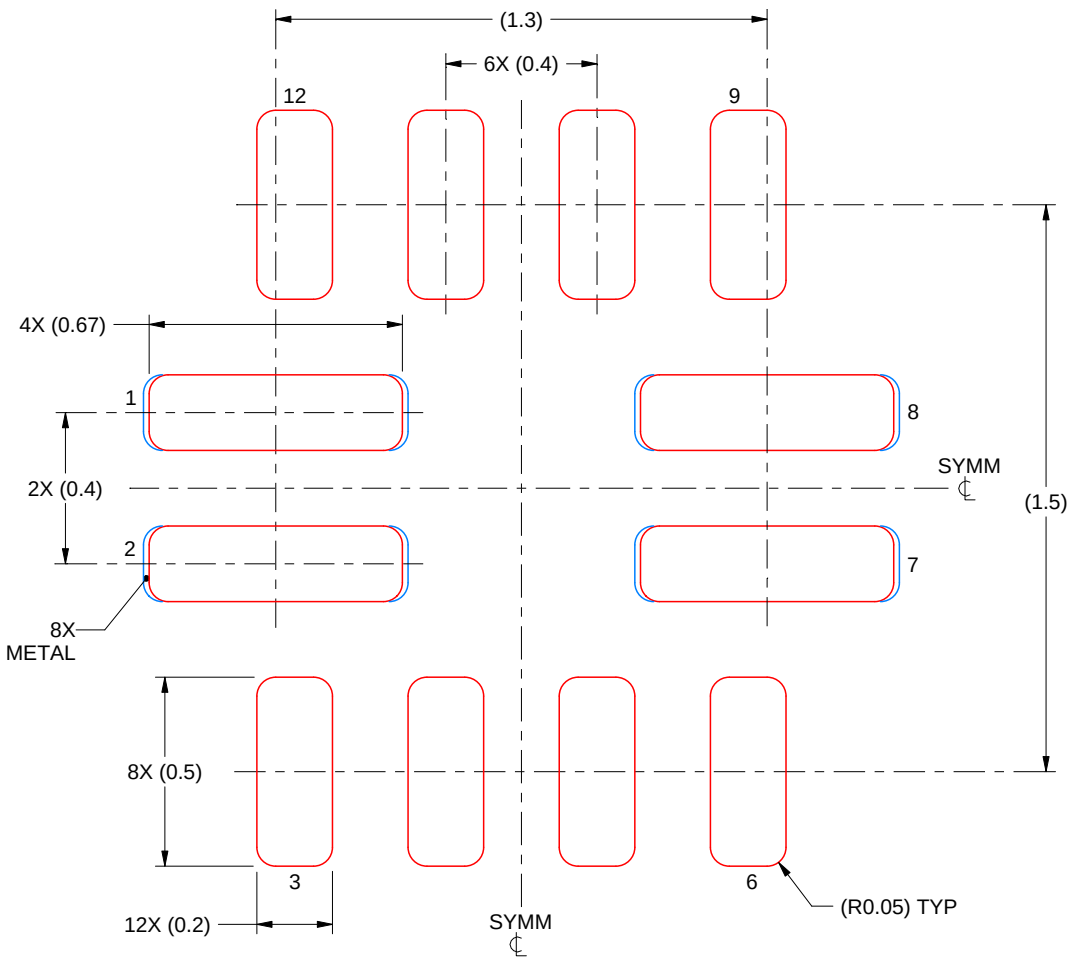

SOLDER PASTE EXAMPLE
BASED ON 0.1 mm THICK STENCIL

PADS 1,2,7 & 8
96% PRINTED SOLDER COVERAGE BY AREA
SCALE:50X

4221631/B 07/2017

NOTES: (continued)

4. Laser cutting apertures with trapezoidal walls and rounded corners may offer better paste release. IPC-7525 may have alternate design recommendations.

IMPORTANT NOTICE AND DISCLAIMER

TI PROVIDES TECHNICAL AND RELIABILITY DATA (INCLUDING DATASHEETS), DESIGN RESOURCES (INCLUDING REFERENCE DESIGNS), APPLICATION OR OTHER DESIGN ADVICE, WEB TOOLS, SAFETY INFORMATION, AND OTHER RESOURCES “AS IS” AND WITH ALL FAULTS, AND DISCLAIMS ALL WARRANTIES, EXPRESS AND IMPLIED, INCLUDING WITHOUT LIMITATION ANY IMPLIED WARRANTIES OF MERCHANTABILITY, FITNESS FOR A PARTICULAR PURPOSE OR NON-INFRINGEMENT OF THIRD PARTY INTELLECTUAL PROPERTY RIGHTS.

These resources are intended for skilled developers designing with TI products. You are solely responsible for (1) selecting the appropriate TI products for your application, (2) designing, validating and testing your application, and (3) ensuring your application meets applicable standards, and any other safety, security, regulatory or other requirements.

These resources are subject to change without notice. TI grants you permission to use these resources only for development of an application that uses the TI products described in the resource. Other reproduction and display of these resources is prohibited. No license is granted to any other TI intellectual property right or to any third party intellectual property right. TI disclaims responsibility for, and you fully indemnify TI and its representatives against any claims, damages, costs, losses, and liabilities arising out of your use of these resources.

TI’s products are provided subject to TI’s Terms of Sale, TI’s General Quality Guidelines, or other applicable terms available either on ti.com or provided in conjunction with such TI products. TI’s provision of these resources does not expand or otherwise alter TI’s applicable warranties or warranty disclaimers for TI products. Unless TI explicitly designates a product as custom or customer-specified, TI products are standard, catalog, general purpose devices.

TI objects to and rejects any additional or different terms you may propose.

Copyright © 2026, Texas Instruments Incorporated

Last updated 10/2025