ADS922x Dual, Simultaneous-Sampling, 16-Bit, 20MSPS SAR ADCs With Fully Differential ADC Input Driver

1 Features

- High-speed sampling rate: 20MSPS/ch
  - ADS9229: 20MSPS/ch, 230mW/ch
  - ADS9228: 10MSPS/ch, 146mW/ch
  - ADS9227: 5MSPS/ch, 95mW/ch
- 2-channel, simultaneous sampling
- Feature integration:
  - Integrated ADC driver
  - Integrated precision reference
  - Common-mode voltage output buffer
- High-performance:
  - 16-bit no missing codes
  - INL: ±0.3LSB, DNL: ±0.3LSB
  - SNR: 93.9dB
- Wide input bandwidth (–3dB):
  - ADS9229 and ADS9228: 90MHz
  - ADS9227: 45MHz
- Serial LVDS interface:
  - SDR and DDR output modes
  - Synchronous clock and data output
- Extended operating range: –40°C to +125°C

2 Applications

- Power analyzers
- Source measurement units (SMU)
- Marine equipment
- Servo drive position feedback
- DC power supplies, AC sources, electronic loads

3 Description

The ADS922x is a family of 16-bit, high-speed, dual-channel, simultaneous-sampling, analog-to-digital converter (ADC) with an integrated driver for the ADC inputs. The integrated ADC driver simplifies the signal chain, reduces power consumption for precision applications, and supports high-frequency signals beyond 1MHz. By not requiring an external decoupling capacitor, the integrated ADC reference buffer is optimized for wide bandwidth applications.

The ADS922x uses a serial LVDS (SLVDS) data interface that enables high-speed digital interface while minimizing digital switching noise. Read the dual-channel ADC data using separate SLVDS outputs per ADC channel or one SLVDS output for both ADC channels.

Package Information

PART NUMBER	PACKAGE(1)	PACKAGE SIZE(2)
ADS9227	RHA (VQFN, 40)	6mm × 6mm
ADS9228		
ADS9229		

(1) For more information, see the *Mechanical, Packaging, and Orderable Information*.
(2) The package size (length × width) is a nominal value and includes pins, where applicable.

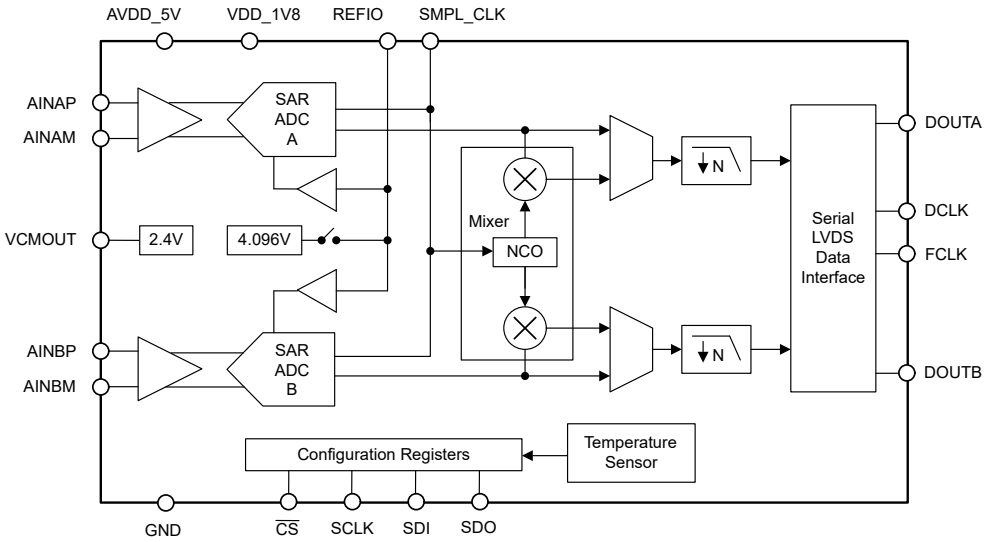

Device Block Diagram

An IMPORTANT NOTICE at the end of this data sheet addresses availability, warranty, changes, use in safety-critical applications, intellectual property matters and other important disclaimers. PRODUCTION DATA.

Table of Contents

1 Features....1
2 Applications....1
3 Description....1
4 Device Comparison Table....3
5 Pin Configuration and Functions....4
6 Specifications....6
6.1 Absolute Maximum Ratings....6
6.2 ESD Ratings....6
6.3 Thermal Information....6
6.4 Recommended Operating Conditions....7
6.5 Electrical Characteristics....8
6.6 Timing Requirements....10
6.7 Switching Characteristics....11
6.8 Timing Diagrams....12
6.9 Typical Characteristics: All Devices....15
6.10 Typical Characteristics: ADS9229....17
6.11 Typical Characteristics: ADS9228....18
6.12 Typical Characteristics: ADS9227....19
7 Detailed Description....20
7.1 Overview....20
7.2 Functional Block Diagram....20
7.3 Feature Description....21
7.4 Device Functional Modes....31
7.5 Programming....32
8 Register Map....36
8.1 Register Bank 0....36
8.2 Register Bank 1....39
8.3 Register Bank 2....54
9 Application and Implementation....55
9.1 Application Information....55
9.2 Typical Applications....55
9.3 Power Supply Recommendations....60
9.4 Layout....61
10 Device and Documentation Support....62
10.1 Documentation Support....62
10.2 Receiving Notification of Documentation Updates....62
10.3 Support Resources....62
10.4 Trademarks....62
10.5 Electrostatic Discharge Caution....62
10.6 Glossary....62
11 Revision History....63
12 Mechanical, Packaging, and Orderable Information....63

Copyright © 2025 Texas Instruments Incorporated

4 Device Comparison Table

PART NUMBER	CHANNELS	RESOLUTION	SPEED
ADS9219	2	18	20MSPS
ADS9218			10MSPS
ADS9217			5MSPS
ADS9229		16	20MSPS
ADS9228			10MSPS
ADS9227			5MSPS
ADS9119	1	18	20MSPS
ADS9118			10MSPS
ADS9117			5MSPS
ADS9129		16	20MSPS
ADS9128			10MSPS
ADS9127			5MSPS

Copyright © 2025 Texas Instruments Incorporated

5 Pin Configuration and Functions

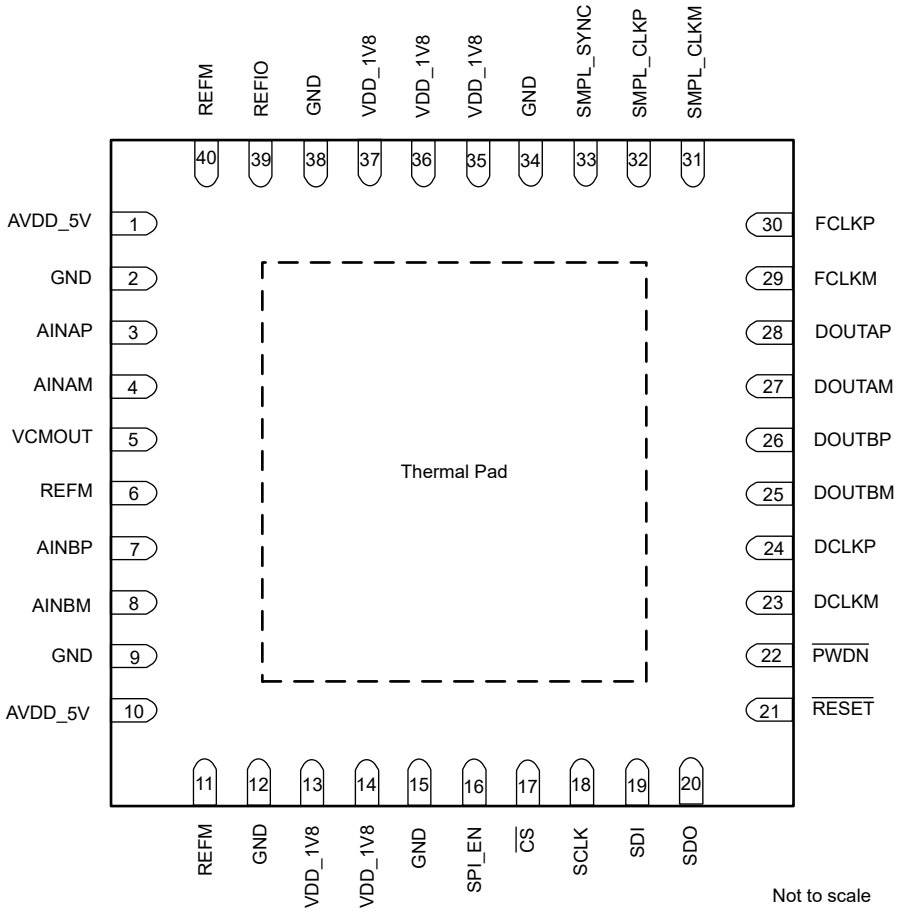

Figure 5-1. RHA Package, 6mm × 6mm, 40-Pin VQFN (Top View)

Pin Functions

PIN		TYPE[1]	DESCRIPTION
NAME	NO.		
AINAM	4	I	Negative analog input for ADC A.
AINAP	3	I	Positive analog input for ADC A.
AINBM	8	I	Negative analog input for ADC B.
AINBP	7	I	Positive analog input for ADC B.
AVDD_5V	1, 10	P	5V analog power-supply pin.
$\overline{CS}$	17	I	Chip-select input pin for the configuration interface; active low.
DCLKM	23	O	Negative differential data clock output. Connect a 100Ω resistor between DCLKP and DCLKM close to the receiver.
DCLKP	24	O	Positive differential data clock output. Connect a 100Ω resistor between DCLKP and DCLKM close to the receiver.
DOUTAM	27	O	Negative differential data output. Connect a 100Ω resistor between DOUTAP and DOUTAM close to the receiver. Transmits ADC A data in 2-lane mode. Transmits ADC A and ADC B data in 1-lane mode.
DOUTAP	28	O	Positive differential data output corresponding to ADC A. Connect a 100Ω resistor between DOUTAP and DOUTAM close to the receiver. Transmits ADC A data in 2-lane mode. Transmits ADC A and ADC B data in 1-lane mode.

Copyright © 2025 Texas Instruments Incorporated

Pin Functions (continued)

PIN		TYPE[1]	DESCRIPTION
NAME	NO.		
DOUTBM	25	O	Negative differential data output corresponding to ADC B in 2-lane mode. Connect a 100Ω resistor between DOUTBP and DOUTBM close to the receiver. Unused in 1-lane mode.
DOUTBP	26	O	Positive differential data output corresponding to ADC B in 2-lane mode. Connect a 100Ω resistor between DOUTBP and DOUTBM close to the receiver. Unused in 1-lane mode.
FCLKM	29	O	Negative differential data frame clock output. Connect a 100Ω resistor between FCLKP and FCLKM close to the receiver.
FCLKP	30	O	Positive differential data frame clock output. Connect a 100Ω resistor between FCLKP and FCLKM close to the receiver.
GND	2, 9, 12, 15, 34, 38	P	Ground.
$\overline{\text{PWDN}}$	22	I	Power-down control; active low. Connect to VDD_1V8 if unused.
REFIO	39	I/O	Internal reference voltage output. External reference voltage input. Connect a 10µF decoupling capacitor to REFM.
REFM	6, 11, 40	P	Reference ground. Connect to GND.
$\overline{\text{RESET}}$	21	I	Reset input; active low. Connect to VDD_1V8 if unused.
SCLK	18	I	Serial clock input for the configuration interface.
SDI / $\overline{\text{EXTREF}}$	19	I	SDI is a multifunction logic input; pin function is determined by the SPI_EN pin. SDI has an internal 100kΩ pulldown resistor to GND. SPI_EN = 0b: SDI is the logic input to select between the internal or external reference. Connect SDI to GND for the external reference. Connect SDI to VDD_1V8 for the internal reference. SPI_EN = 1b: Serial data input for the configuration interface
SDO	20	O	Serial data output for the configuration interface.
SMPL_CLKM	31	I	ADC sampling clock input. Negative differential input for the LVDS sampling clock. Connect this pin to GND for the CMOS sampling clock.
SMPL_CLKP	32	I	ADC sampling clock input. Positive differential input for the LVDS sampling clock. Clock input for the CMOS sampling clock.
SMPL_SYNC	33	I	Synchronization input for internal averaging filter. Connect to GND if unused. See the *Synchronizing Multiple ADCs* section on how to use the SMPL_SYNC pin.
SPI_EN	16	I	Control to enable configuration of the SPI interface; active high. Connect a pullup resistor to VDD_1V8 to keep the configuration interface enabled. Connect to GND if SPI configuration is unused. When SPI_EN = 0, select the reference voltage with the SDI/$\overline{\text{EXTREF}}$ pin.
Thermal Pad	—	P	Exposed thermal pad. Connect to GND.
VCMOUT	5	O	Common-mode voltage output. Use VCMOUT to set the common-mode voltage at the ADC inputs. Connect a 1µF decoupling capacitor to GND.
VDD_1V8	13, 14, 35, 36, 37	P	1.8V power-supply. Connect 1µF and 0.1µF decoupling capacitors to GND.

(1) I = input, O = output, I/O = input or output, G = ground, P = power.

Copyright © 2025 Texas Instruments Incorporated

6 Specifications

6.1 Absolute Maximum Ratings

over operating ambient temperature range (unless otherwise noted)(1)

	MIN	MAX	UNIT
VDD_1V8 to GND	–0.3	2.1	V
AVDD_5V to GND	–0.3	5.5	V
AINAP, AINAM, AINBP, and AINBM to GND	GND – 0.3	AVDD_5V + 0.3	V
REFIO to REFM	REFM – 0.3	AVDD_5V + 0.3	V
Digital inputs to GND	GND – 0.3	VDD_1V8 + 0.3	V
REFM to GND	–0.3	0.3	V
Input current to any pin except supply pins(2)	–10	10	mA
Junction temperature, T_J	–40	150	°C
Storage temperature, T_{stg}	–60	150	°C

(1) Operation outside the *Absolute Maximum Ratings* may cause permanent device damage. *Absolute Maximum Ratings* do not imply functional operation of the device at these or any other conditions beyond those listed under *Recommended Operating Conditions*. If used outside the *Recommended Operating Conditions* but within the *Absolute Maximum Ratings*, the device may not be fully functional, and this may affect device reliability, functionality, performance, and shorten the device lifetime.
(2) Pin current must be limited to 10 mA or less.

6.2 ESD Ratings

			VALUE	UNIT
$V_{(ESD)}$	Electrostatic discharge	Human body model (HBM), per ANSI/ESDA/JEDEC JS-001, analog input pins AINAP, AINAM, AINBP, and AINBM(1)	±2000	V
		Human body model (HBM), per ANSI/ESDA/JEDEC JS-001, all other pins(1)	±1000	
		Charged device model (CDM), per ANSI/ESDA/JEDEC JS-002, all pins(2)	±500	

(1) JEDEC document JEP155 states that 500V HBM allows safe manufacturing with a standard ESD control process.
(2) JEDEC document JEP157 states that 250V CDM allows safe manufacturing with a standard ESD control process.

6.3 Thermal Information

THERMAL METRIC(1)		ADS922x RHA (VQFN) 40 PINS	UNIT
$R_{\theta JA}$	Junction-to-ambient thermal resistance	25.8	°C/W
$R_{\theta JC(top)}$	Junction-to-case (top) thermal resistance	13.3	°C/W
$R_{\theta JB}$	Junction-to-board thermal resistance	7.5	°C/W
Ψ_{JT}	Junction-to-top characterization parameter	0.1	°C/W
Ψ_{JB}	Junction-to-board characterization parameter	7.4	°C/W
$R_{\theta JC(bot)}$	Junction-to-case (bottom) thermal resistance	1.1	°C/W

(1) For more information about traditional and new thermal metrics, see the *Semiconductor and IC Package Thermal Metrics* application note.

Copyright © 2025 Texas Instruments Incorporated

6.4 Recommended Operating Conditions

over operating free-air temperature range (unless otherwise noted)

PARAMETER		TEST CONDITIONS	MIN	TYP	MAX	UNIT
POWER SUPPLY						
AVDD_5V	Analog power supply AVDD_5V to GND	ADS9227	4.5	5	5.5	V
		ADS9228, ADS9229	4.75	5	5.25	
VDD_1V8	Power supply	VDD_1V8 to GND	1.75	1.8	1.85	V
REFERENCE VOLTAGE						
V_{REF}	Reference voltage to the ADC	External reference	4.076	4.096	4.116	V
ANALOG INPUTS						
V_{IN}	Absolute input voltage	AINx(1) to GND	V_{CM} – 1.6		V_{CM} + 1.6	V
FSR	Full-scale input range	(AINAP – AINAM) and (AINBP – AINBM)	–3.2		3.2	V
V_{CM}	Common-mode input range(2)	(AINAP + AINAM) / 2 and (AINBP + AINBM) / 2	V_{CMOUT} – 0.07		V_{CMOUT} + 0.07	V
TEMPERATURE RANGE						
T_A	Ambient temperature		–40	25	125	°C

(1) AINx refers to analog inputs AINAP, AINAM, AINBP, and AINBM.
(2) ADC channel is powered down if the input common-mode voltage exceeds specifications.

Copyright © 2025 Texas Instruments Incorporated

6.5 Electrical Characteristics

at AVDD_5V = 4.75V to 5.25V for ADS9229, and ADS9228, and AVDD_5V = 4.5V to 5.5V for ADS9227, VDD_1V8 = 1.75V to 1.85V, internal V_{REF} = 4.096V, and maximum throughput (unless otherwise noted); minimum and maximum values at T_A = –40°C to +125°C; typical values at T_A = 25°C

PARAMETER		TEST CONDITIONS	MIN	TYP	MAX	UNIT
ANALOG INPUTS						
I_B	Input bias current			0.1		nA
	Input bias current thermal drift	T_A = 0°C to 70°C		0.02		nA/°C
		T_A = –40°C to 125°C		0.1		
DC PERFORMANCE						
	Resolution	No missing codes		16		Bits
DNL	Differential nonlinearity		–0.9	±0.3	0.9	LSB
INL	Integral nonlinearity	T_A = °C to 70°C, all devices	–0.4	±0.3	0.4	LSB
		ADS9228, ADS9227	–0.75	±0.3	0.75	
		ADS9229	–1	±0.3	1	
$V_{(OS)}$	Input offset error			±10		LSB
dV_{OS}/dT	Input offset error thermal drift			0.25	1	ppm/°C
G_E	Gain error(1)		–0.05	±0.01	0.05	%FSR
dG_E/dT	Gain error thermal drift(1)			0.5	2	ppm/°C
AC PERFORMANCE						
SINAD	Signal-to-noise + distortion ratio	f_{IN} = 2kHz	92	93.8		dB
		f_{IN} = 1MHz		92.9		
SNR	Signal-to-noise ratio	f_{IN} = 2kHz	92.3	93.9		dBFS
		f_{IN} = 1MHz		93.3		
THD	Total harmonic distortion	f_{IN} = 2kHz		–120		dB
		f_{IN} = 1MHz		–104		
SFDR	Spurious-free dynamic range	f_{IN} = 2kHz		120		dB
		f_{IN} = 1MHz		104		
	Isolation crosstalk	f_{IN} = 2kHz		120		dB
SAMPLING DYNAMICS						
	Aperture Jitter	SIngle-ended CMOS clock on SMPL_CLKP		0.3		ps_{RMS}
		Differential LVDS sampling clock		0.8		
BW	Input-bandwidth	ADS9229, ADS9228		90		MHz
		ADS9227		45		
INTERNAL REFERENCE						
V_{REF} (2)	Voltage on REFIO pin (configured as output)	1µF capacitor on REFIO pin, T_A = 25°C	4.092	4.096	4.1	V
	Reference temperature drift			6	20	ppm/°C
COMMON-MODE OUTPUT BUFFER						
V_{CMOUT}	Common-mode output voltage	ADS9229	2.2	2.460	2.65	V
		ADS9228	2.2	2.410	2.65	
		ADS9227	2.2	2.385	2.65	
	Output current drive		0		5	µA
LVDS RECEIVER (SMPL_CLK)						
V_{TH}	High-level input voltage (P – M)	AC coupled	100			mV
		DC coupled	300			

Copyright © 2025 Texas Instruments Incorporated

6.5 Electrical Characteristics (continued)

at AVDD_5V = 4.75V to 5.25V for ADS9229, and ADS9228, and AVDD_5V = 4.5V to 5.5V for ADS9227, VDD_1V8 = 1.75V to 1.85V, internal V_{REF} = 4.096V, and maximum throughput (unless otherwise noted); minimum and maximum values at T_A = –40°C to +125°C; typical values at T_A = 25°C

PARAMETER		TEST CONDITIONS	MIN	TYP	MAX	UNIT
V_{TL}	Low-level input voltage (P – M)	AC coupled			–100	mV
		DC coupled			–300	
V_{ICM}	Input common-mode voltage		0.5	1.2	1.4	V
LVDS OUTPUT (CLKOUT, DOUTA, and DOUTB)						
V_{ODIFF}	Differential output voltage	R_L = 100Ω	200	350	500	mV
V_{OCM}	Output common-mode voltage	R_L = 100Ω	0.88	1.1	1.32	V
CMOS INPUTS ($\overline{CS}$, SCLK, and SDI)						
V_{IL}	Input low logic level		–0.1		0.5	V
V_{IH}	Input high logic level		1.3		VDD_1V8	V
CMOS OUTPUT (SDO)						
V_{OL}	Output low logic level	I_{OL} = 200µA sink	0		0.4	V
V_{OH}	Output high logic level	I_{OH} = 200µA source	1.4		VDD_1V8	V
POWER SUPPLY						
I_{AVDD_5V}	Supply current from AVDD_5V	at 20 MSPS throughput (ADS9229)		55	59	mA
		At 10 MSPS throughput (ADS9228)		33	40	
		At 5 MSPS throughput (ADS9227)		20	24	
		Power-down			2	
I_{VDD_1V8}	Supply current from VDD_1V8	at 20 MSPS throughput (ADS9229)		103	110	mA
I_{VDD_1V8}	Supply current from VDD_1V8	At 10 MSPS throughput (ADS9228)		70.5	89	
		At 5 MSPS throughput (ADS9227)		50	66	
		Power-down			2	

(1) These specifications include full temperature range variation but not the error contribution from internal reference.
(2) Does not include the variation in voltage resulting from solder shift effects.

Copyright © 2025 Texas Instruments Incorporated

6.6 Timing Requirements

at AVDD_5V = 4.75V to 5.25V for ADS9229, and ADS9228, and AVDD_5V = 4.5V to 5.5V for ADS9227, VDD_1V8 = 1.75V to 1.85V, internal V_{REF} = 4.096V, and maximum throughput (unless otherwise noted); minimum and maximum values at T_A = –40°C to +125°C; typical values at T_A = 25°C

			MIN	MAX	UNIT
CONVERSION CYCLE					
f_{CYCLE}	Sampling frequency	ADS9229	7	20	MHz
		ADS9228	3.9	10	
		ADS9227	3.9	5	
t_{CYCLE}	ADC cycle time period		1 / f_{CYCLE}		s
$t_{PL_SMPLCLK}$	Sample clock low time		0.4	0.6	t_{CYCLE}
$t_{PH_SMPLCLK}$	Sample clock high time		0.4	0.6	t_{CYCLE}
f_{CLK}	Maximum SCLK frequency			10	MHz
t_{CLK}	Minimum SCLK time period		100		ns
SPI TIMINGS					
t_{hi_CSZ}	Pulse duration: $\overline{CS}$ high		220		ns
t_{PH_CK}	SCLK high time		0.48	0.52	t_{CLK}
t_{PL_CK}	SCLK low time		0.48	0.52	t_{CLK}
t_{d_CSCK}	Setup time: $\overline{CS}$ falling to the first SCLK rising edge		20		ns
t_{su_CKDI}	Setup time: SDI data valid to the corresponding SCLK rising edge		10		ns
t_{ht_CKDI}	Hold time: SCLK rising edge to corresponding data valid on SDI		5		ns
t_{d_CKCS}	Delay time: last SCLK falling edge to $\overline{CS}$ rising		5		ns

Copyright © 2025 Texas Instruments Incorporated

6.7 Switching Characteristics

at AVDD_5V = 4.75V to 5.25V for ADS9229, and ADS9228, and AVDD_5V = 4.5V to 5.5V for ADS9227, VDD_1V8 = 1.75V to 1.85V, internal V_{REF} = 4.096V, and maximum throughput (unless otherwise noted); minimum and maximum values at T_A = –40°C to +125°C; typical values at T_A = 25°C

PARAMETER		TEST CONDITIONS	MIN	MAX	UNIT
RESET					
t_{PU}	Power-up time for device			25	ms
LVDS DATA INTERFACE					
t_{RT}	Rise time	With 50Ω transmission line of length = 20mm, differential R_L = 100Ω, and C_L = 1pF		600	ps
t_{FT}	Fall time			600	ps
t_{CYCLE}	Sampling clock period	ADS9229	50		ns
		ADS9228	100		
		ADS9227	200		
t_{DCLK}	Clock output		4.167		ns
	Clock duty cycle		45	55	%
t_{d_DCLKDO}	Time delay: DCLKP rising to corresponding data valid	SDR mode	–0.35	0.35	ns
$t_{off_DCLKDO_r}$	Time offset: DCLKP rising to corresponding data valid	DDR mode	t_{DCLK} / 4 – 0.35	t_{DCLK} / 4 + 0.35	ns
$t_{off_DCLKDO_f}$	Time offset: DCLKP falling to corresponding data valid	DDR mode	t_{DCLK} / 4 – 0.35	t_{DCLK} / 4 + 0.35	ns
t_{PD}	Time delay: SMPL_CLK falling to DCLKP rising			t_{DCLK}	ns
$t_{PU_SMPL_CLK}$	Time delay: Free-running clock connected to SMPL_CLK to ADC data valid			100	µs
$t_{d_SMPL_DATA}$	Time delay: SMPL_CLK falling to FCLKP rising	ADS9229	370	378	ns
		ADS9228	186	196	
		ADS9227	103	112	
SPI TIMINGS					
t_{den_CKDO}	Time delay: 8th SCLK rising edge to SDO enable			30	ns
t_{dz_CKDO}	Time delay: 24th SCLK rising edge to SDO going Hi-Z			30	ns
t_{d_CKDO}	Time delay: SCLK launch edge to corresponding data valid on SDO			30	ns
t_{ht_CKDO}	Hold time: SCLK launch edge to previous data valid on SDO		2		ns

Copyright © 2025 Texas Instruments Incorporated

6.8 Timing Diagrams

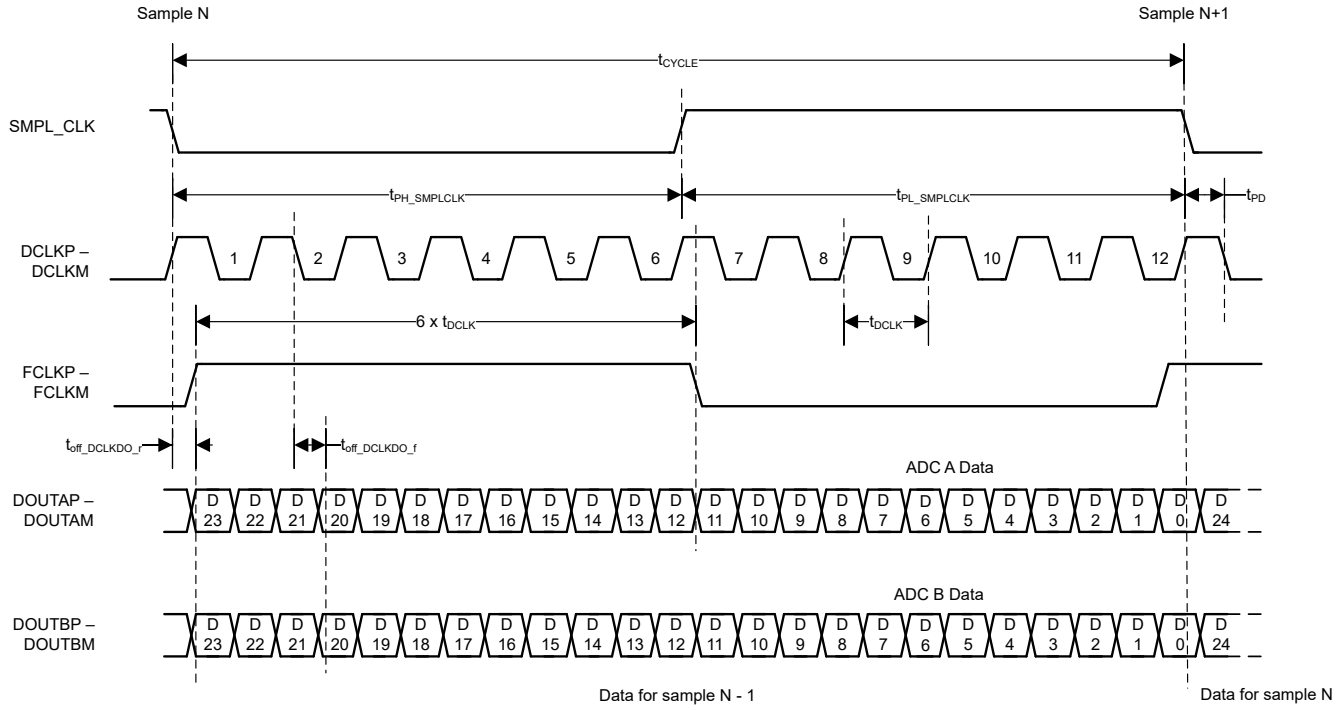

Figure 6-1. LVDS Data Interface: 2-Lane DDR

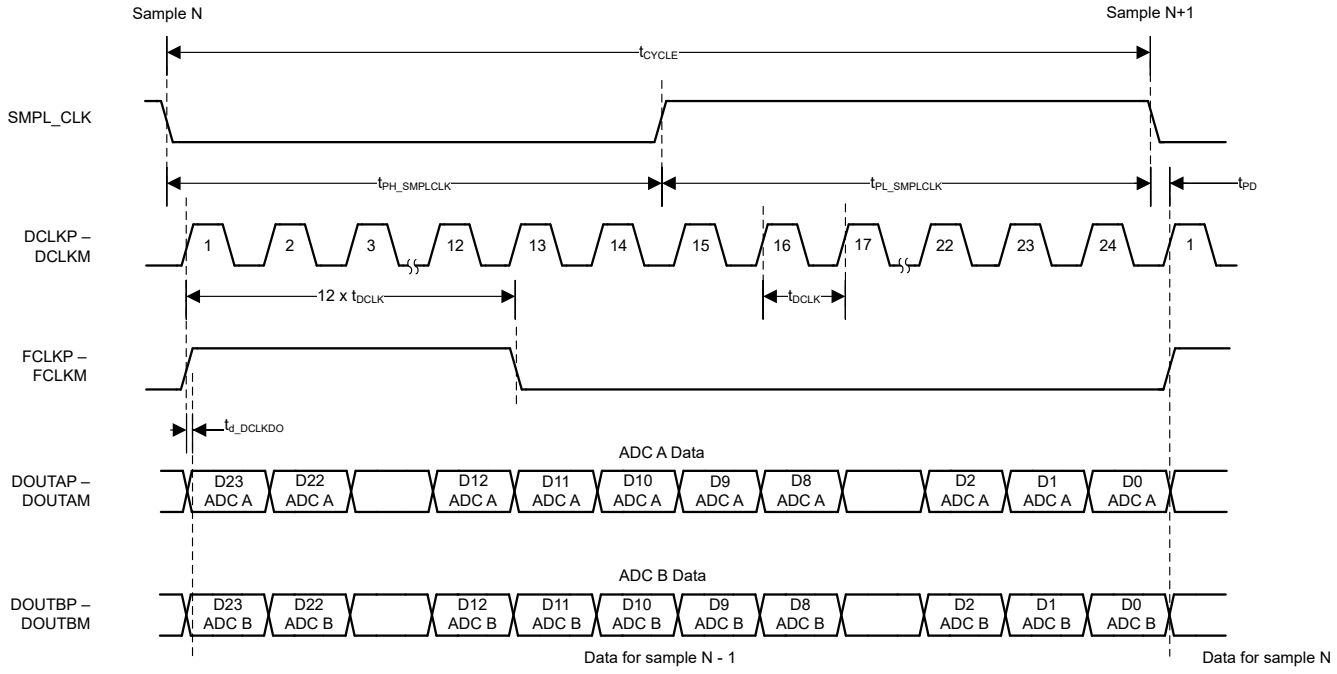

Figure 6-2. LVDS Data Interface: 2-Lane SDR

Copyright © 2025 Texas Instruments Incorporated

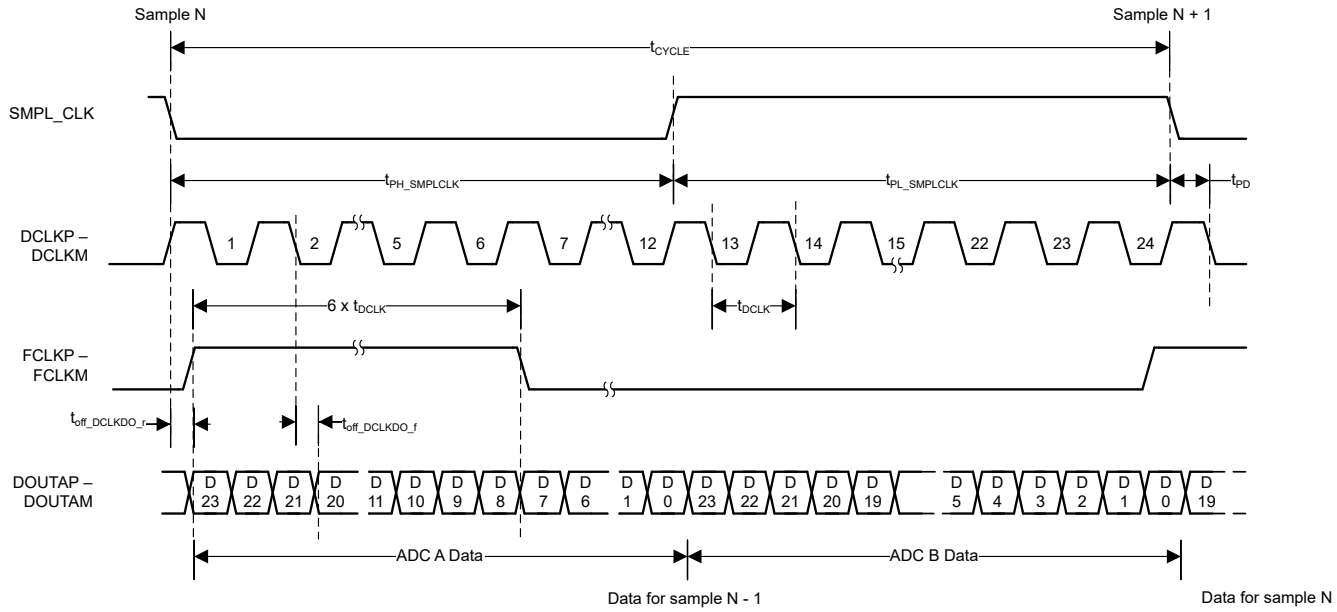

Figure 6-3. LVDS Data Interface: 1-Lane DDR

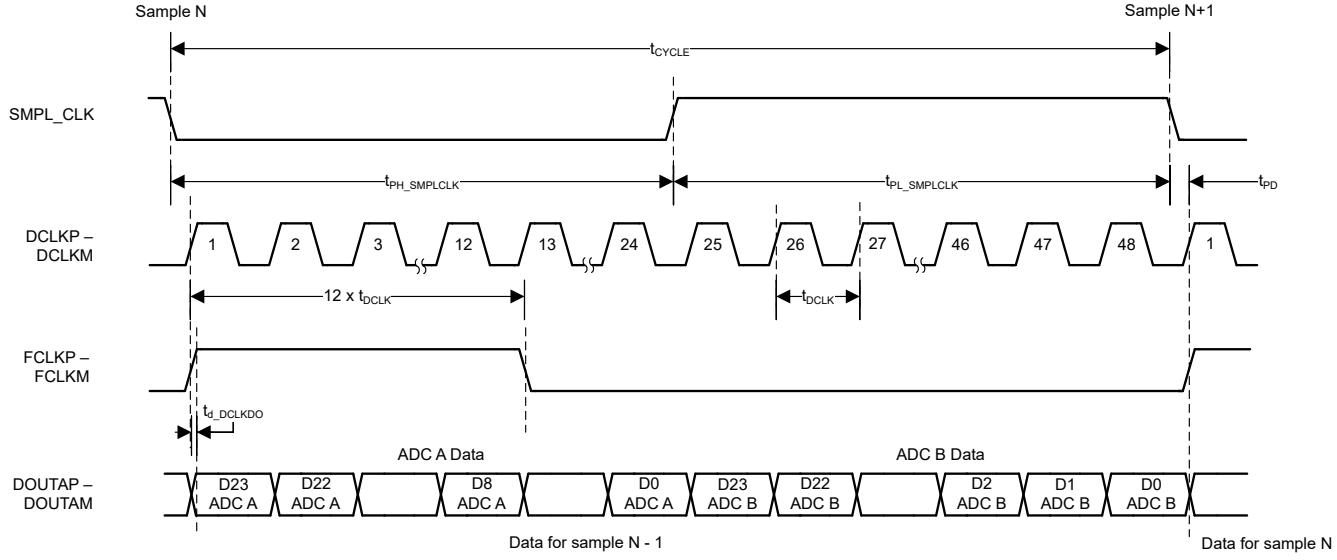

Figure 6-4. LVDS Data Interface: 1-Lane SDR

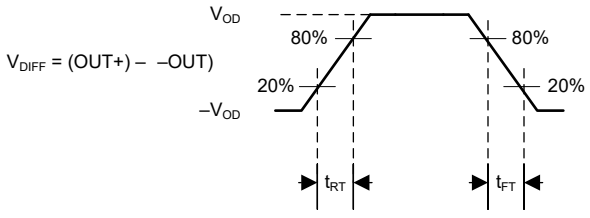

Figure 6-5. LVDS Output Transition Times

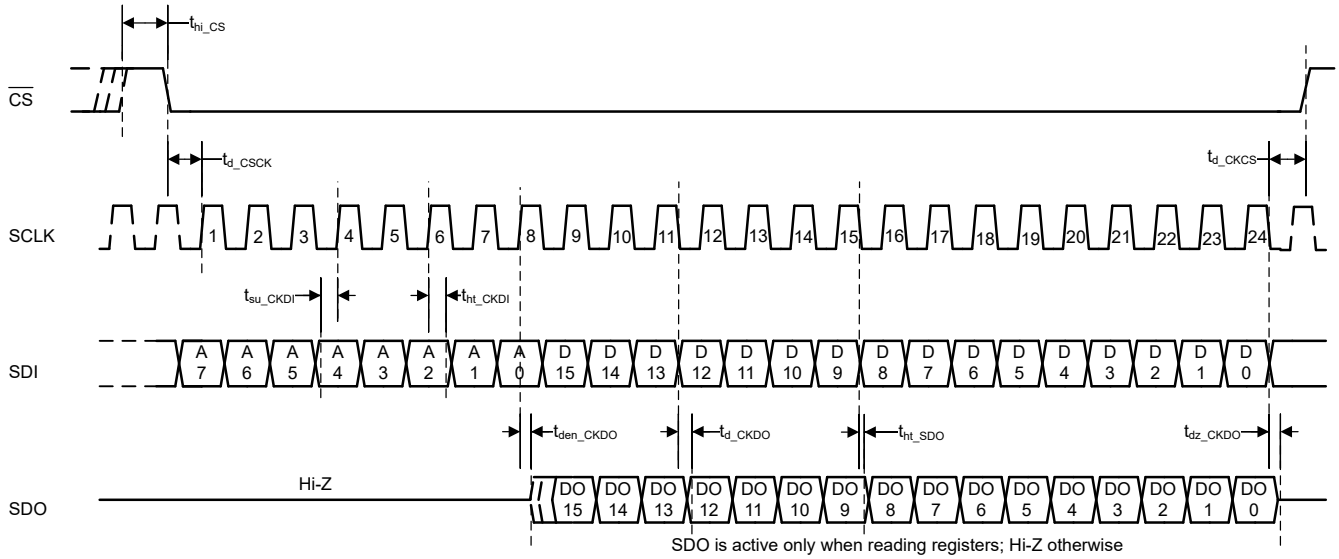

Figure 6-6. Configuration SPI

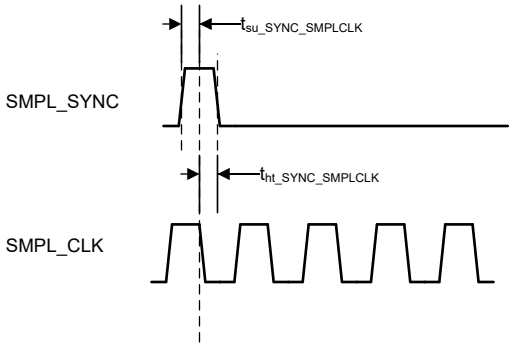

Figure 6-7. SMPL_SYNC Timing

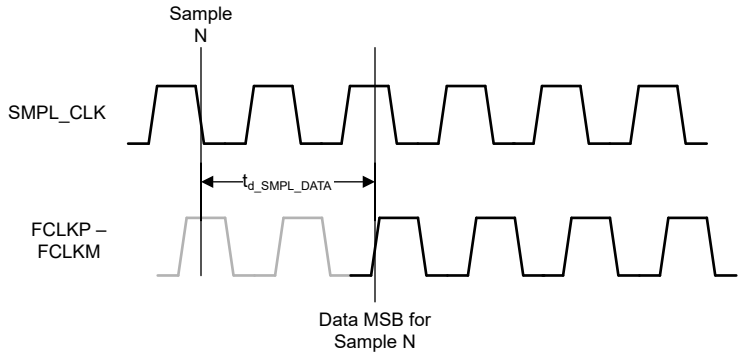

Figure 6-8. Sampling Edge to Corresponding Data MSB Output Timing

Copyright © 2025 Texas Instruments Incorporated

6.9 Typical Characteristics: All Devices

at T_A = 25°C, AVDD_5V = 5V, VDD_1V8 = 1.8V, external V_{REF} = 4.096V, and maximum throughput (unless otherwise noted)

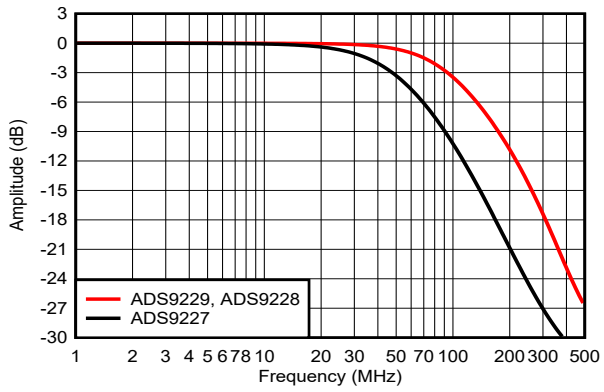

Figure 6-9. Typical Analog Input Bandwidth

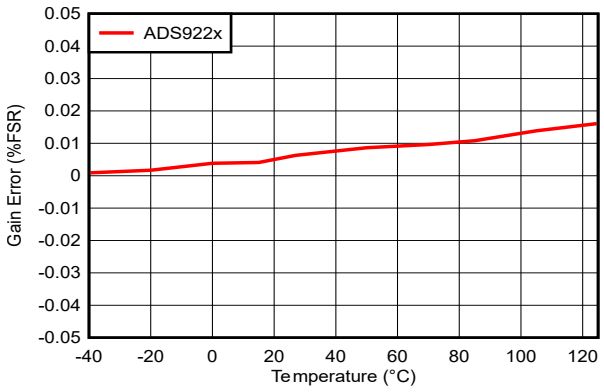

Figure 6-10. Gain Error vs Temperature

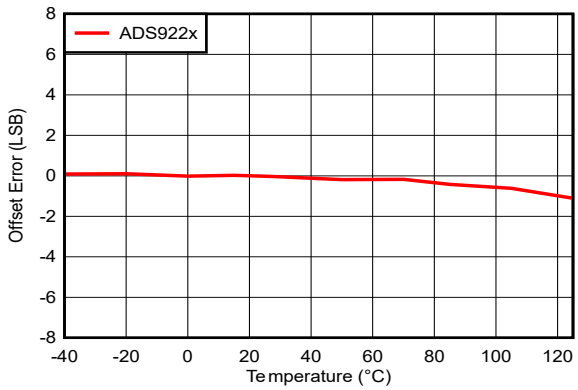

Figure 6-11. Offset Error vs Temperature

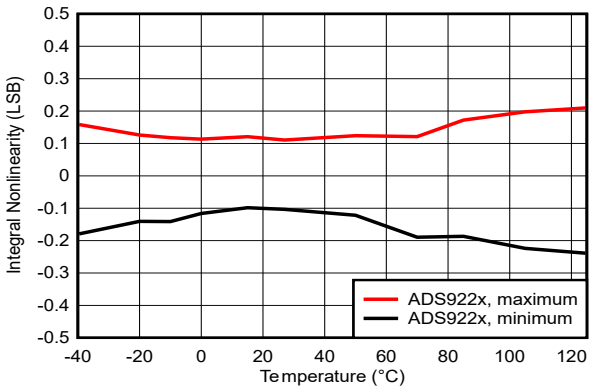

Figure 6-12. INL vs Temperature

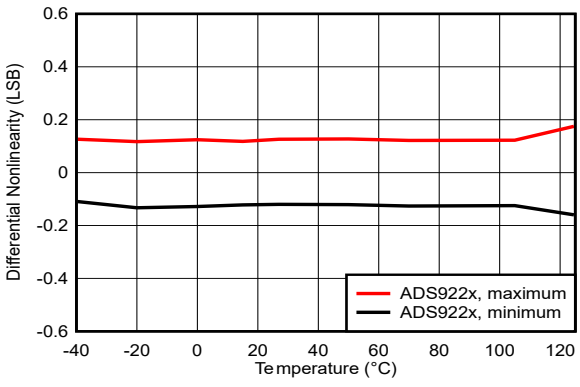

Figure 6-13. DNL vs Temperature

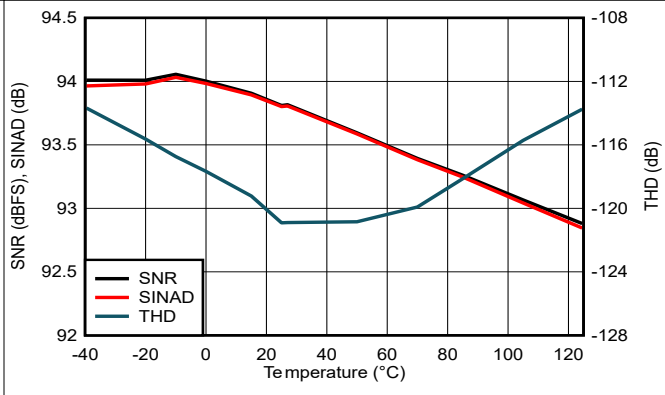

Figure 6-14. SNR, SINAD, and THD vs Temperature

Copyright © 2025 Texas Instruments Incorporated

6.9 Typical Characteristics: All Devices (continued)

at T_A = 25°C, AVDD_5V = 5V, VDD_1V8 = 1.8V, external V_{REF} = 4.096V, and maximum throughput (unless otherwise noted)

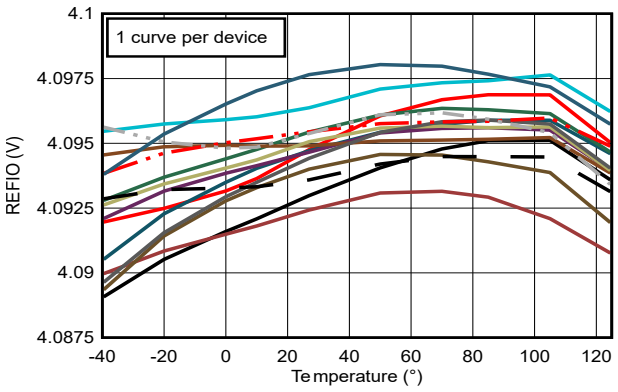

Figure 6-15. REFIO Voltage vs Temperature

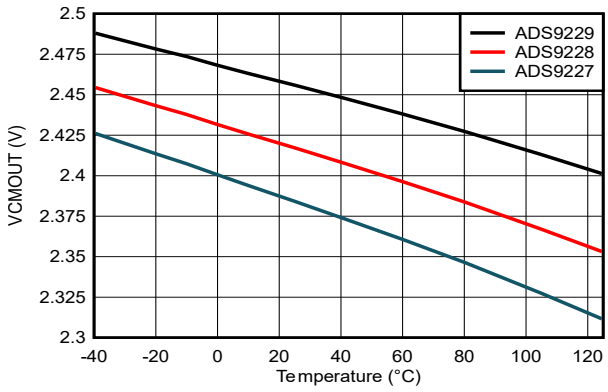

Figure 6-16. V_{CMOUT} Voltage vs Temperature

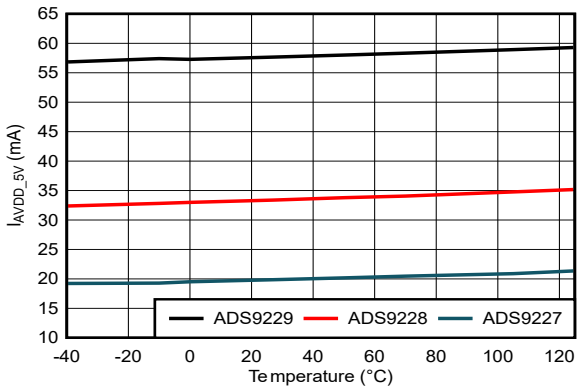

Figure 6-17. AVDD_5V Current vs Temperature

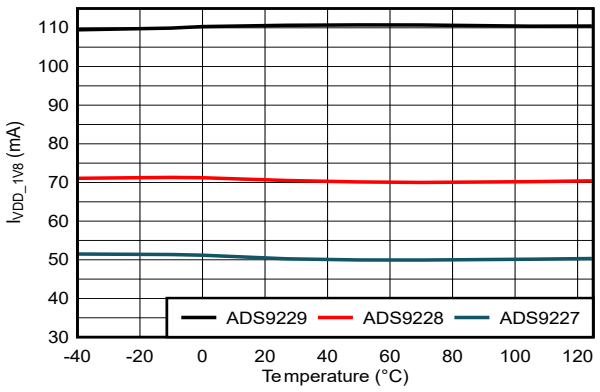

Figure 6-18. VDD_1V8 Current vs Temperature

Copyright © 2025 Texas Instruments Incorporated

6.10 Typical Characteristics: ADS9229

at T_A = 25°C, AVDD_5V = 5V, VDD_1V8 = 1.8V, external V_{REF} = 4.096V, and maximum throughput (unless otherwise noted)

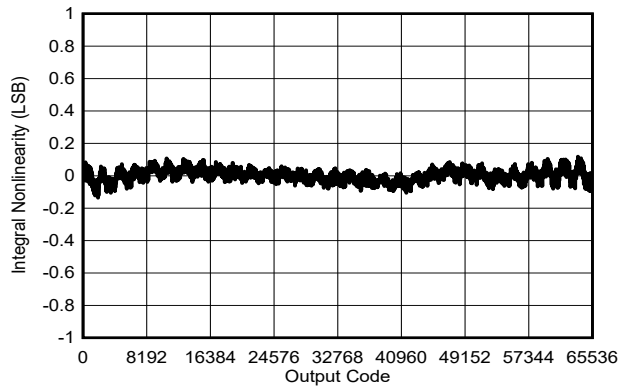

Typical INL = ±0.15LSB

Figure 6-19. Typical INL

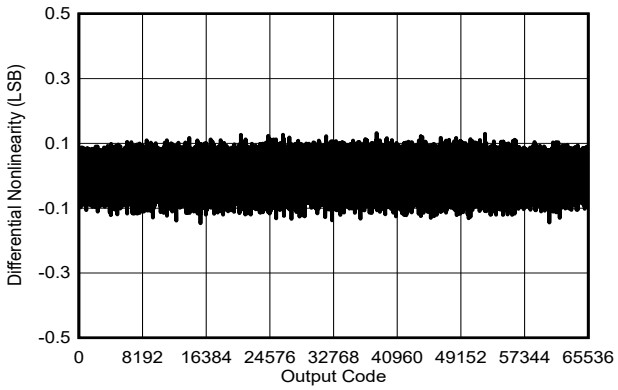

Typical DNL = ±0.15LSB

Figure 6-20. Typical DNL: ADS9229

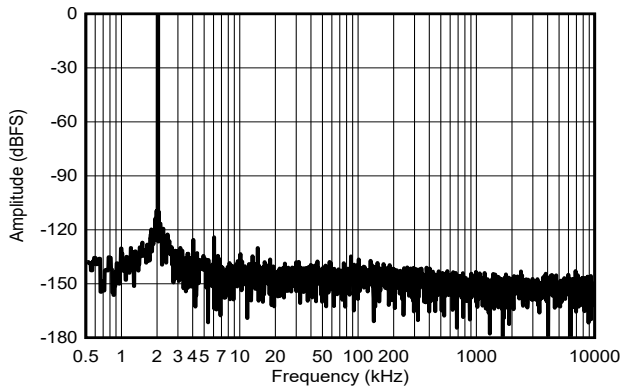

f_{IN} = 2kHz, SNR = 93.5dBFS, THD = –120dB

Figure 6-21. Typical FFT for f_{IN} = 2kHz

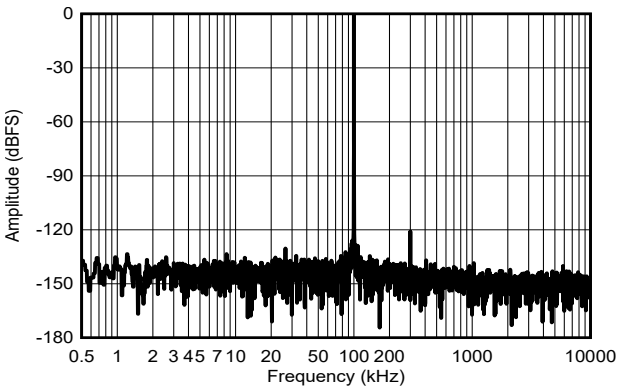

f_{IN} = 100kHz, SNR = 93.5dBFS, THD = –118dB

Figure 6-22. Typical FFT for f_{IN} = 100kHz

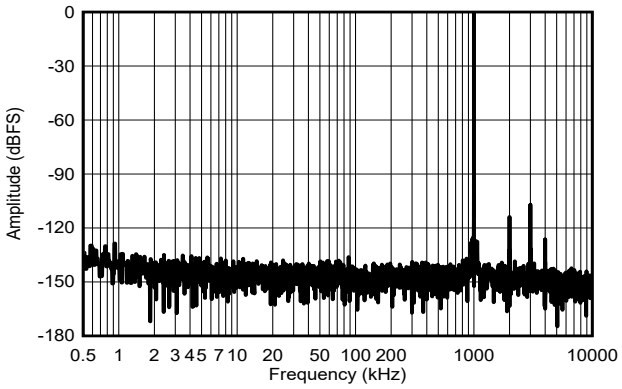

f_{IN} = 1MHz, SNR = 93.3dBFS, THD = –104.2dB

Figure 6-23. Typical FFT for f_{IN} = 1MHz

Copyright © 2025 Texas Instruments Incorporated

6.11 Typical Characteristics: ADS9228

at T_A = 25°C, AVDD_5V = 5V, VDD_1V8 = 1.8V, internal V_{REF} = 4.096V, and maximum throughput (unless otherwise noted)

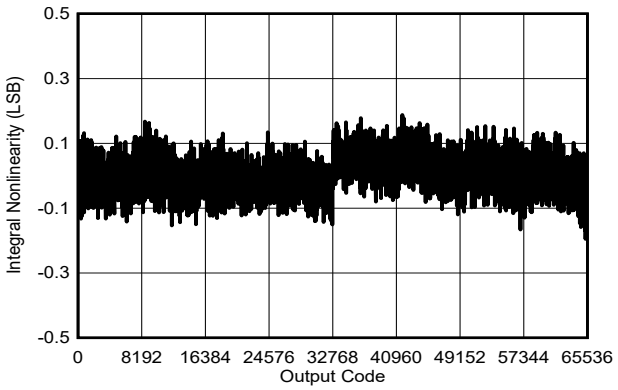

Typical INL = ±0.2LSB

Figure 6-24. Typical INL

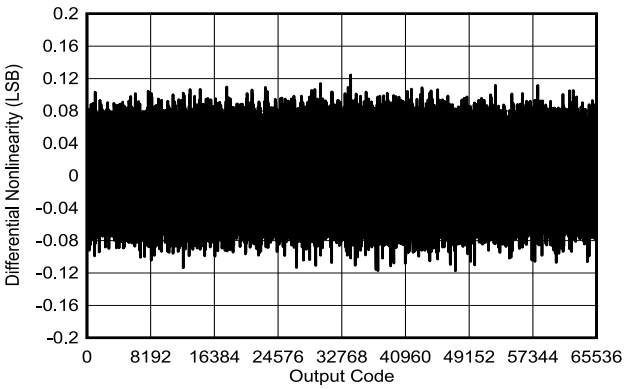

Typical DNL = ±0.15LSB

Figure 6-25. Typical DNL

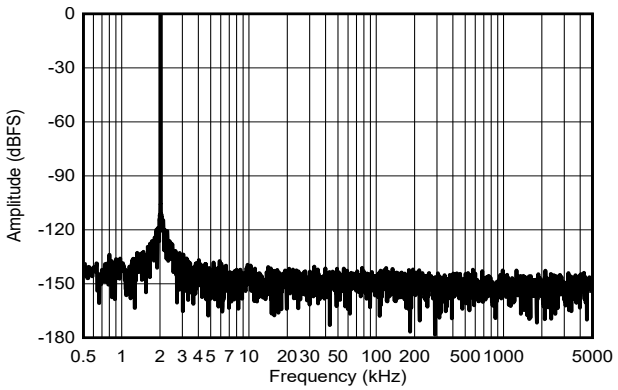

f_{IN} = 2kHz, SNR = 93.9dBFS, THD = –122dB

Figure 6-26. Typical FFT for f_{IN} = 2kHz

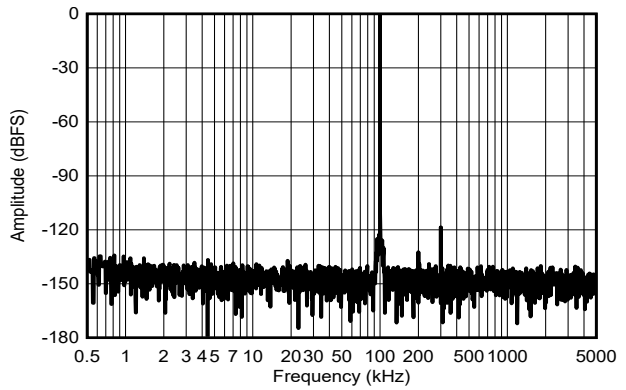

f_{IN} = 100kHz, SNR = 93.8dBFS, THD = –118dB

Figure 6-27. Typical FFT for f_{IN} = 100kHz

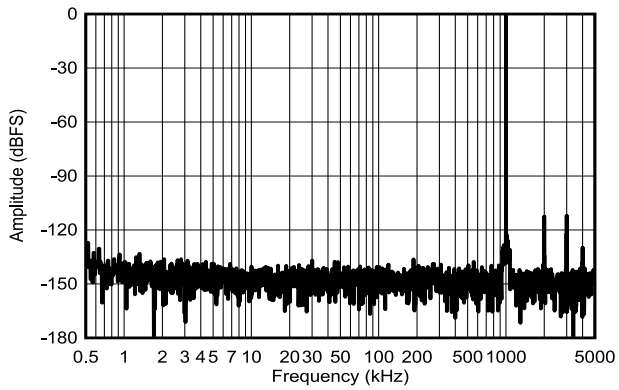

f_{IN} = 1MHz, SNR = 93.3dBFS, THD = –104dB

Figure 6-28. Typical FFT for f_{IN} = 1MHz

Copyright © 2025 Texas Instruments Incorporated

6.12 Typical Characteristics: ADS9227

at T_A = 25°C, AVDD_5V = 5V, VDD_1V8 = 1.8V, internal V_{REF} = 4.096V, and maximum throughput (unless otherwise noted)

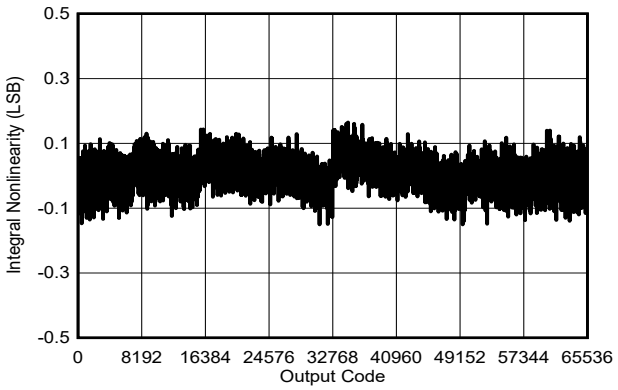

Typical INL = ±0.2LSB

Figure 6-29. Typical INL

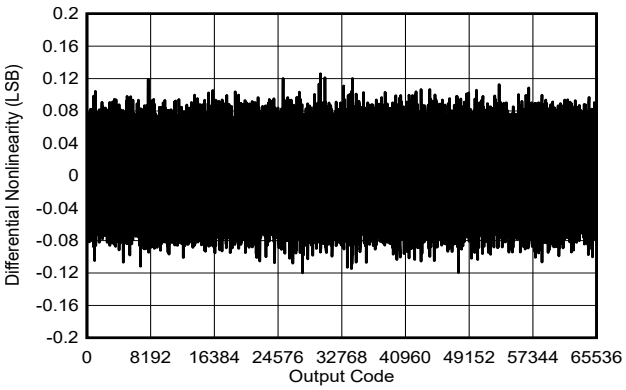

Typical DNL = ±0.15LSB

Figure 6-30. Typical DNL

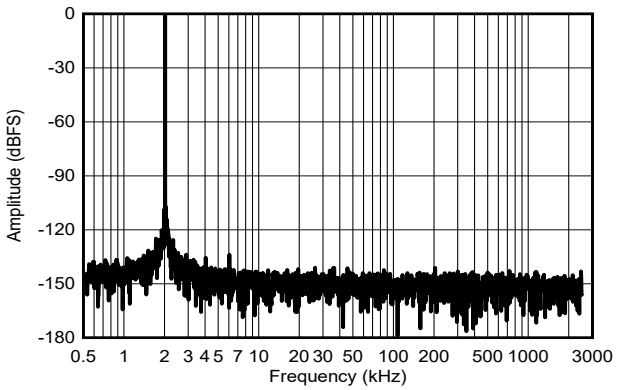

f_{IN} = 2kHz, SNR = 93.9dBFS, THD = –122.5dB

Figure 6-31. Typical FFT for f_{IN} = 2kHz

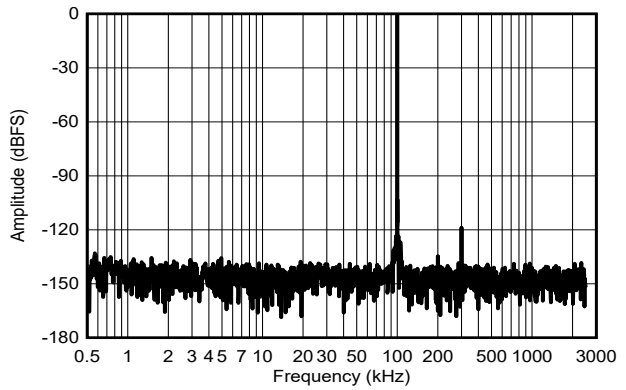

f_{IN} = 100kHz, SNR = 93.8dBFS, THD = –119dB

Figure 6-32. Typical FFT for f_{IN} = 100kHz

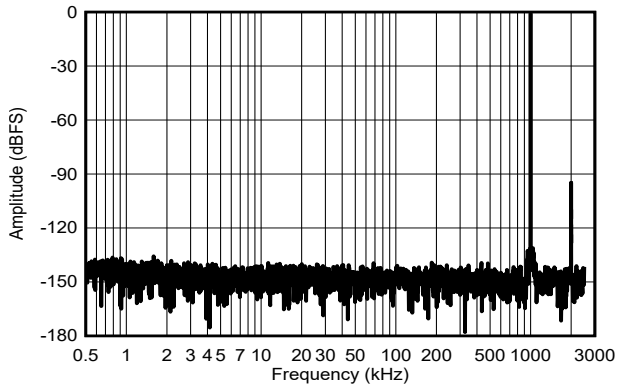

f_{IN} = 1MHz, SNR = 93.3dBFS, THD = –104.5dB

Figure 6-33. Typical FFT for f_{IN} = 1MHz

Copyright © 2025 Texas Instruments Incorporated

7 Detailed Description

7.1 Overview

The ADS922x is a 16-bit, 20MSPS/ch, dual-channel, simultaneous-sampling, analog-to-digital converter (ADC). The ADS922x integrates a high-impedance buffer at the ADC inputs, voltage reference, reference buffer, and common-mode voltage output buffer. The ADS9229 supports unipolar differential analog input signals. The buffer at the ADC inputs is optimized for low-distortion and low-power operation.

For DC level shifting of the analog input signals, the device has a common-mode voltage output buffer. The common-mode voltage is derived from the output of the integrated reference buffer. When a conversion is initiated, the differential input between the (AINAP – AINAM) and (AINBP – AINBM) pins is sampled. The ADS922x uses a clock input on the SMPL_CLKP pin to initiate conversions.

The ADS922x consumes only 230mW/ch of power when operating at 20MSPS/ch, which includes the buffer power dissipation at the ADC inputs. The serial LVDS (SLVDS) digital interface simplifies board layout, timing, firmware, and supports full throughput at lower clock speeds.

7.2 Functional Block Diagram

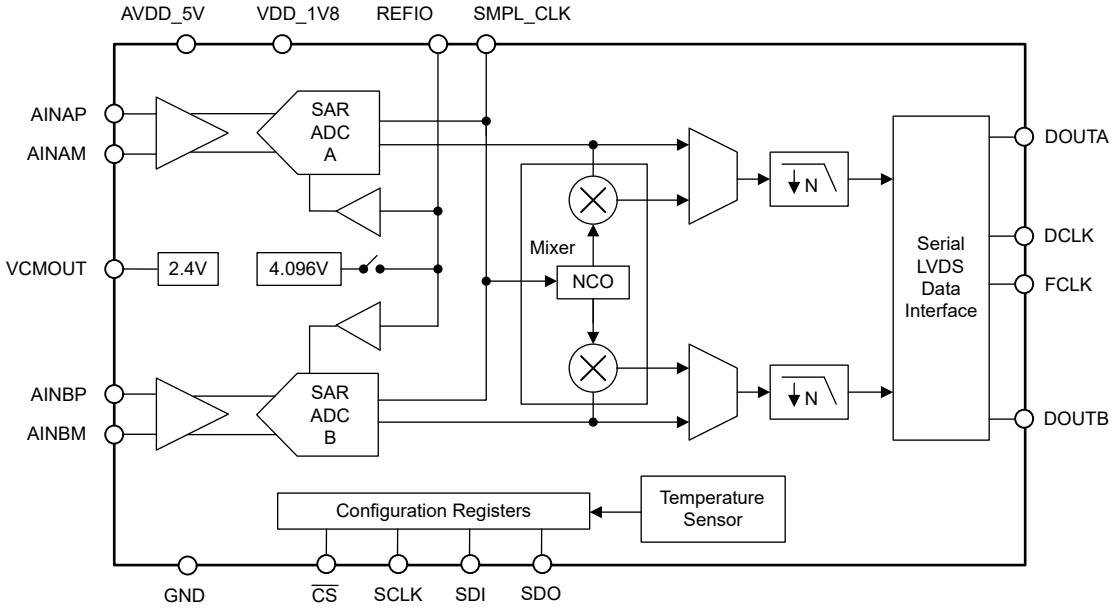

Copyright © 2025 Texas Instruments Incorporated

7.3 Feature Description

7.3.1 Analog Inputs

The ADS922x supports both AC-coupled and DC-coupled differential analog inputs. Make sure the input common-mode voltage of the analog inputs matches the voltage level on the VCMOUT pin. Figure 7-1 shows the equivalent input network diagram of the device.

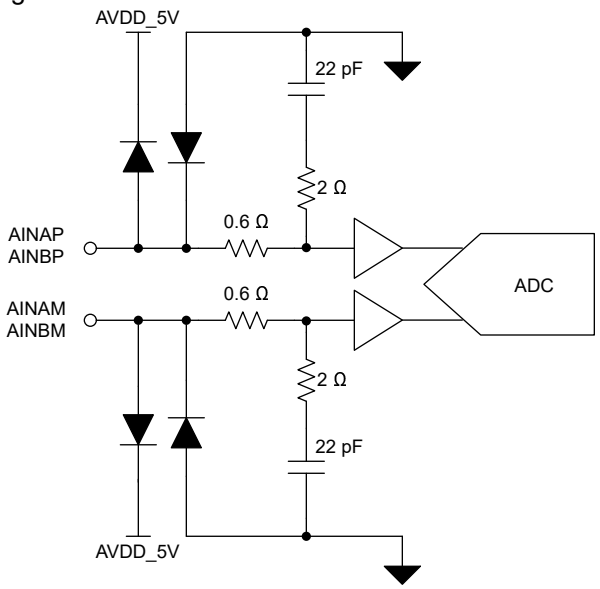

Figure 7-1. Equivalent Input Network

7.3.2 Analog Input Bandwidth

Figure 6-9 illustrates the analog full-power input bandwidth of the ADS922x device family. The –3dB bandwidth is 90MHz for the ADS9229 and ADS9228, and 45MHz for the ADS9227.

7.3.3 ADC Transfer Function

The ADS922x supports a ±3.2V differential input range. The device outputs 16-bit conversion data in either straight-binary or binary two's-complement formats. As shown in Table 7-1, the format for the output codes is the same across all analog channels. Configure the format for the output codes with the DATA_FORMAT field in register address 0x0D. The least significant bit (LSB) for the ADC is given by 1LSB = 6.4V / 2^{16}.

Table 7-1. Transfer Characteristics

INPUT VOLTAGE	DESCRIPTION	ADC OUTPUT IN 2's-COMPLEMENT FORMAT	ADC OUTPUT IN STRAIGHT-BINARY FORMAT
≤ –3.2V + 1LSB	Negative full-scale code	0x8000	0x0000
0V + 1LSB	Mid-code	0x0000	0x7FFF
≥ 3.2V – 1LSB	Positive full-scale code	0x7FFF	0xFFFF

7.3.4 Reference

The ADS922x has a precision, low-drift voltage reference internal to the device. For best performance, filter the internal reference noise by connecting a 10µF ceramic bypass capacitor to the REFIO pin. Connect an external reference at the REFIO pin with the internal reference voltage disabled by writing to the PD_REF field in register address 0xC1.

Copyright © 2025 Texas Instruments Incorporated

7.3.4.1 Internal Reference Voltage

The ADS922x features an internal reference voltage with a nominal output voltage of 4.096V. On power-up, the internal reference is enabled by default. Place a minimum 10µF decoupling capacitor between the REFIO and REFM pins. Figure 7-2 shows a block diagram of the internal reference voltage.

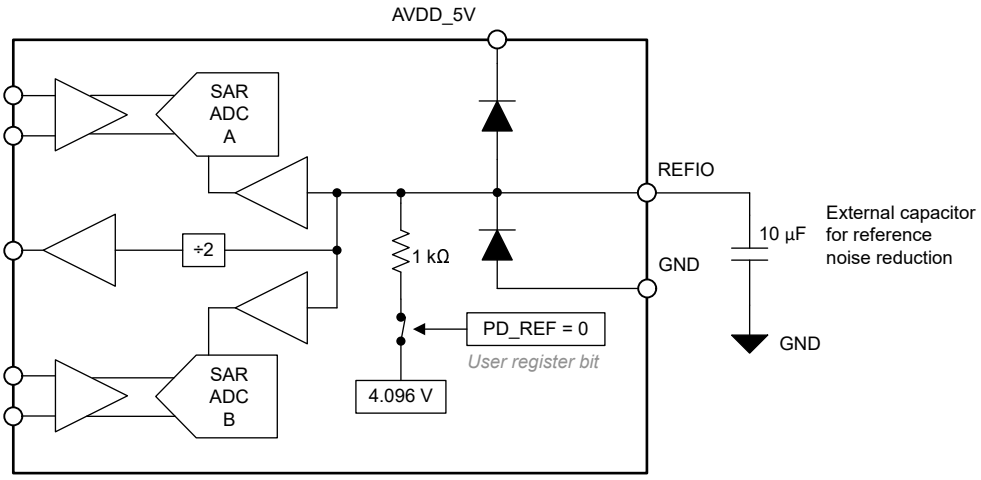

Figure 7-2. Internal Reference Voltage

7.3.4.2 External Reference Voltage

Connect an external 4.096V reference voltage at the REFIO pin with an appropriate decoupling capacitor placed between the REFIO and REFM pins. For improved thermal drift performance, the REF7040 is recommended. To disable the internal reference, set PD_REF = 1b in address 0xC1 in register bank 1. The REFIO pin has electrostatic discharge (ESD) protection diodes connected to the AVDD_5V and REFM pins. Figure 7-3 shows an external reference diagram.

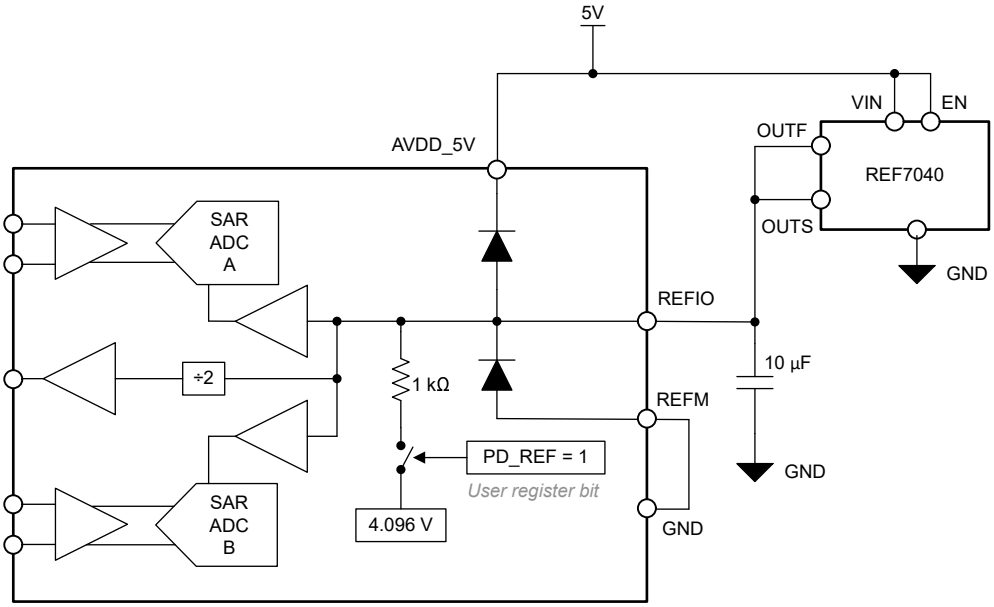

Figure 7-3. External Reference Voltage

Copyright © 2025 Texas Instruments Incorporated

7.3.5 Temperature Sensor

The ADS922x features a 10-bit temperature sensor for measuring temperature inside the device. Follow the sequence listed in Table 7-2 to read the temperature sensor output with the SPI. Read the temperature sensor data at anytime independent of the ADC data interface.

The transfer function for the temperature sensor is given by Equation 1:

$$\text{Temperature} = -85.0172 + (10\text{ bit output} \times 0.24918)\ ^{\circ}\text{C} \quad (1)$$

Table 7-2. Sequence to Read Temperature Sensor Output

REGISTER ADDRESS	REGISTER BANK	VALUE	COMMENT
0x90	1	0x4000	Write register to load temperature sensor output in address 0x91
0x91	1	10 bit temperature sensor data	Read register for temperature sensor output
0x90	1	0x0000	Write register

7.3.6 Data Averaging

The ADS922x features a built-in decimation filter that averages the conversion results from the ADC. The output data rate is reduced with higher data averaging. Table 7-3 compares the ADC output speed against SNR and OSR. The improvement in SNR with averaging in Table 7-4 shows the register settings corresponding to oversampling ratios.

Table 7-3. SNR vs OSR

OSR	SNR (dBFS)	ADC OUTPUT SPEED
1	93.8	f_{CYCLE}
2	94.9	f_{CYCLE} / 2
4	95.9	f_{CYCLE} / 4
8	96.6	f_{CYCLE} / 8
16	97.0	f_{CYCLE} / 16

Table 7-4. Register Map Settings for OSR

DECIMATION	REGISTER	INTERFACE MODES[1]	
		2-LANE SDR AND DDR[2]	1-LANE SDR AND DDR[3]
OSR initialization	CLK3 (0xC5[9])	1	0 for OSR = 2 1 for OSR = 4, 8, and 16
	OSR_INIT1 (0xC0[11:10])	0 for DATA_LANES = 5 or 7 1 for DATA_LANES = 0 or 2	
	OSR_INIT2 (0xC4[5:4])	2	0 for OSR = 2 2 for OSR = 4, 8, and 16
	OSR_INIT3 (0xC4[1])	1	0 for OSR = 2 1 for OSR = 4, 8, and 16
	OSR_EN (0x0D[6])	1	1
	OSR_RD (0xC5[6:5])	1	0 for OSR = 2 1 for OSR = 4, 8, and 16
2	OSR (0x0D[5:2])	0	0
	OSR_CLK (0xC0[9:7])	0	0
4	OSR (0x0D[5:2])	1	1
	OSR_CLK (0xC0[9:7])	4	0
8	OSR (0x0D[5:2])	2	2
	OSR_CLK (0xC0[9:7])	5	4

Copyright © 2025 Texas Instruments Incorporated

Table 7-4. Register Map Settings for OSR (continued)

DECIMATION	REGISTER	INTERFACE MODES(1)	
		2-LANE SDR AND DDR(2)	1-LANE SDR AND DDR(3)
16	OSR (0x0D[5:2])	3	3
	OSR_CLK (0xC0[9:7])	6	5

(1) See Table 7-7 and Table 7-8 for DATA_LANES configuration.
(2) The ADS9227 functions with all data interface modes.
(3) Not applicable for the ADS9227.

As shown in Figure 7-4, a pulse on the SMPL_SYNC pin resets the decimation filter. A pulse on SMPL_SYNC synchronizes multiple ADS922x devices when using the decimation filter.

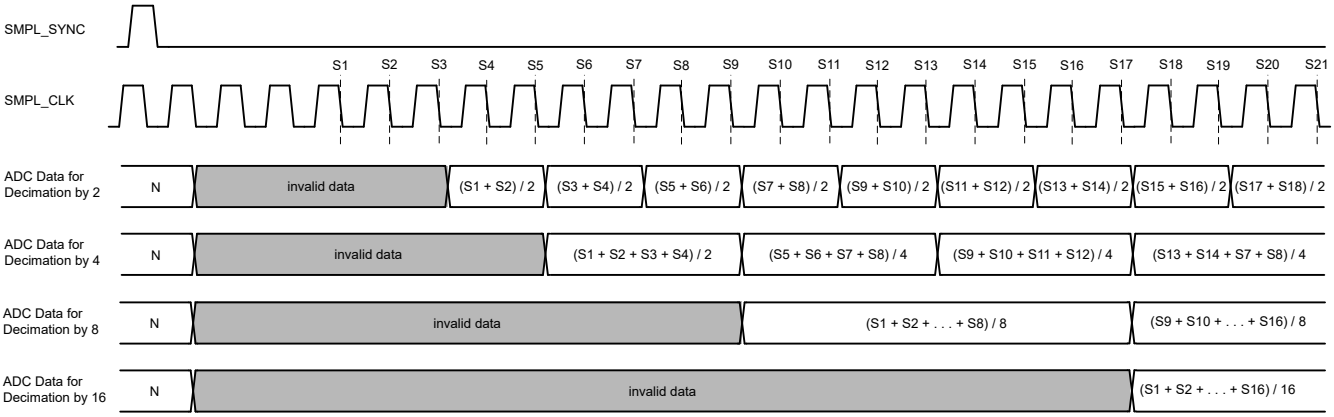

Figure 7-4. Data Output With Decimation

7.3.7 Digital Down Converter

The ADS922x includes an optional on-chip digital down conversion (DDC) that is configured by register addresses FBh through FEh. As shown in Figure 7-5, the DDC includes a digital mixer and a 24-bit, numerically controlled oscillator (NCO). The digital mixer generates 24-bit I and Q outputs that represent complex mixing of ADC output data with the NCO output frequency. Each channel of the ADC generates a 48-bit output corresponding to the 24-bit I and Q outputs, respectively, from the digital mixer.

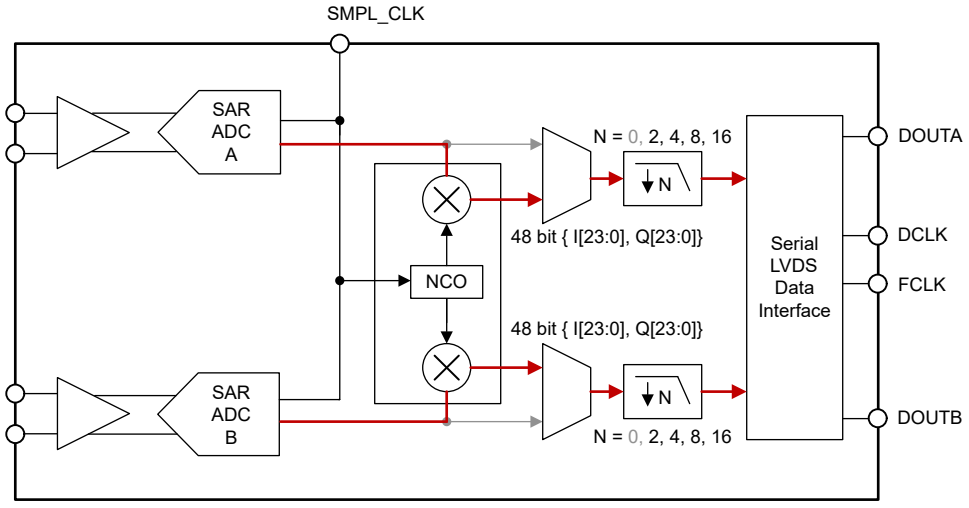

Figure 7-5. Data Path When Using a Digital Down Converter

Copyright © 2025 Texas Instruments Incorporated

The NCO is common for both ADC A and ADC B. The output frequency of the NCO, given by Equation 2, is configured using the NCO_FREQUENCY register (address 0xFD and 0xFE).

$$f_{NCO} = \frac{f_{SMPL_CLK}}{2^{24}} \times (NCO_FREQUENCY[23:0] \,\&\, 0xFFFFF0)\ Hz \quad (2)$$

The output phase of the NCO is reset by applying a pulse on the SMPL_SYNC pin, see Figure 6-7. As shown in Equation 3 and Table 7-5, the initial phase of the NCO output is configured using the NCO_PHASE register (address 0xFC and 0xFD).

$$NCO_PHASE[23:0] = \left(\frac{\text{Initial phase}}{2\pi} \times 2^{24}\right) \& \ 0xFFFFF0 \quad (3)$$

Table 7-5. Initial NCO Phase

NCO_PHASE[23:0]	INITIAL PHASE
0x000000	0
0x7FFFF0	π
0xFFFFF0	2π

Use a decimation factor of either 2, 4, 8, or 16 with the DDC. Table 7-6 shows the register configuration for decimating the DDC output.

Table 7-6. Decimation Settings for the DDC

DECIMATION	REGISTER	VALUE
2	OSR_EN (0x0D[6])	1
	OSR (0x0D[5:2]	0
	OSR_CLK (0xC0[9:7])	0
Common settings for decimation factors 4, 8, and 16	CLK3 (0xC5[9])	1
	OSR_INIT1 (0xC0[11:10])	1
	OSR_INIT2 (0xC4[5:4])	2
	OSR_INIT3 (0xC4[1])	1
	OSR_EN (0x0D[6])	1
	OSR_RD (0xC5[6:5])	1
4	OSR (0x0D[5:2]	1
	OSR_CLK (0xC0[9:7])	0
8	OSR (0x0D[5:2]	2
	OSR_CLK (0xC0[9:7])	4
16	OSR (0x0D[5:2]	3
	OSR_CLK (0xC0[9:7])	5

Copyright © 2025 Texas Instruments Incorporated

7.3.8 Data Interface

The ADS922x features a high-speed, serial LVDS data interface with 2-lane and 1-lane options for data output. The host configures the output data frame width to 20 bits or 24 bits with the single-data rate (SDR) and double-data rate (DDR) modes. Table 7-7 and Table 7-8 configuration.

Configure the INIT_1 register field before writing to other register fields, as described in Table 7-7 and Table 7-8.

Table 7-7. Register Map Settings for Output Data Interface for the ADS9227

DATA FRAME WIDTH (Bits)	DATA RATE	OUTPUT LANES	INIT_1 0x04[3:0]	DATA_LANES 0x12[2:0]	DATA_RATE 0xC1[8]	CLK1 0xC0[12]	CLK2 0xC1[0]	CLK3 0xC5[9]	CLK4 0xC5[3:2]	CLK5 0xFB[1]	CLK6 0x1C[7:6]
20	SDR	1	0x000B	5	1	1	1	1	3	0	3
20	SDR	2	0x000B	0	1	0	1	0	3	0	3
20	DDR	1	0x000B	5	0	1	1	1	3	0	3
20	DDR	2	0x000B	0	0	0	1	0	3	0	3
24	SDR	1	0x000B	7	1	1	0	1	3	0	3
24	SDR	2	0x0000	2	1	0	0	0	0	0	0
24	DDR	1	0x000B	7	0	1	0	1	3	0	3
24	DDR	2	0x0000	2	0	0	0	0	0	0	0

Table 7-8. Register Map Settings for Output Data Interface for the ADS9229 and ADS9228

DATA FRAME WIDTH (Bits)	DATA RATE	OUTPUT LANES	INIT_1 0x04[3:0]	DATA_LANES 0x12[2:0]	DATA_RATE 0xC1[8]	CLK1 0xC0[12]	CLK2 0xC1[0]	CLK3 0xC5[9]	CLK4 0xC5[3:2]	CLK5 0xFB[1]	CLK6 0x1C[7:6]
20	SDR	1	–	Not supported							
20	SDR	2	–	Not supported							
20	DDR	1	–	Not supported							
20	DDR	2	–	Not supported							
24	SDR	1	–	2	1	0	0	0	0	1	0
24	SDR	2	–	2	1	0	0	0	0	0	0
24	DDR	1	–	2	0	0	0	0	0	1	0
24	DDR	2	–	2	0	0	0	0	0	0	0

The ADS922x generates a data clock DCLK that is a multiple of the ADC sampling clock SMPL_CLK. The data clock frequency depends on the number of data output lanes (1 or 2), data frame width, and data rate. The data frame width is 20 or 24 bits and the data rate is SDR or DDR. Equation 4 calculates the DCLK speed. Table 7-9 lists the possible values for the output data clock frequency.

$$\text{DCLK speed} = \frac{2\ \text{ADC channels} \times \text{Data Frame Width (24 bit or 20 bit)}}{\text{Data Lanes (1 or 2)} \times \text{Data Rate(SDR} = 1,\ \text{DDR} = 2)} \times \text{SMPL_CLK} \quad (4)$$

Copyright © 2025 Texas Instruments Incorporated

Table 7-9. Data Clock (DCLK) Speed

ADC CHANNELS	DATA FRAME WIDTH (Bits)	DATA RATE (1 = SDR, 2 = DDR)	OUTPUT LANES(1)	SMPL_CLK MULTIPLIER	DCLK (SMPL_CLK = 5MHz)	DCLK (SMPL_CLK = 10MHz)	DCLK (SMPL_CLK = 20MHz)
2	24	1	1	48	240MHz	—	—
			2	24	120MHz	—(2)	—(2)
		2	1	24	120MHz	240MHz	480MHz
			2	12	60MHz	120MHz	240MHz
	20	1	1	40	200MHz	—(3)	—(3)
			2	20	100MHz	—(3)	—(3)
		2	1	20	100MHz	—(3)	—(3)
			2	10	50MHz	—(3)	—(3)

(1) The LVDS output data and clock are specified up to 600MHz. Faster speeds are not supported.
(2) For the ADS9229 and ADS9228, 1-lane data output is supported only when data averaging is enabled. See the *Data Averaging* section.
(3) A 20-bit data frame width is not supported for the ADS9229 or ADS9228.

7.3.8.1 Data Frame Width

As shown in Figure 7-6, the ADS922x supports 24-bit and 20-bit data frame width options. Configure the DATA_WIDTH field in address 0x12 to select the data frame width. The default output data frame width is 24 bits. The ADC resolution is 16-bit, represented by 20 bits.

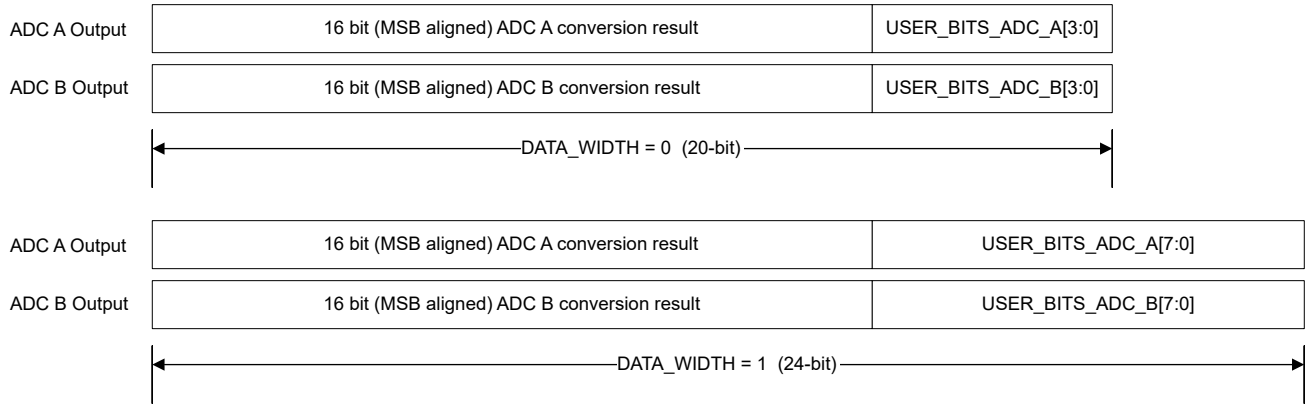

Figure 7-6. Data Frame Width Composition

7.3.8.2 ADC Output Data Randomizer

The ADS922x features a data output randomizer. When enabled, the ADC conversion result is bit-wise exclusive-ORed (XOR). Figure 7-7 illustrates a diagram of such an XOR operation. Either the LSB of the conversion result (Figure 7-9) or XOR_PRBS bit (default) is appended to the ADC data output (Figure 7-8). The LSB of the ADC conversion result and XOR_PRBS have equal probability of being either 1 or 0. As a result of the XOR operation, the data output from the ADS922x is randomized. The ground bounce created by the transmission of this randomized result over the data interface is uncorrelated with the analog input voltage. This uncorrelated transmission helps minimize interference between data transmission and analog performance of the ADC when the PCB layout does not minimize ground bounce.

Copyright © 2025 Texas Instruments Incorporated

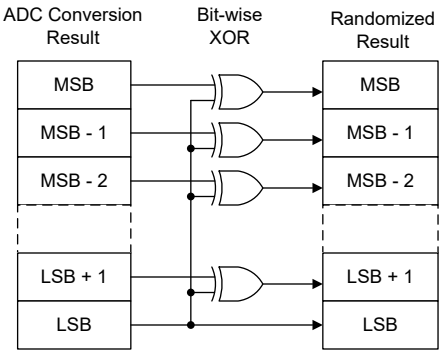

Figure 7-7. Bit-Wise XOR Operation

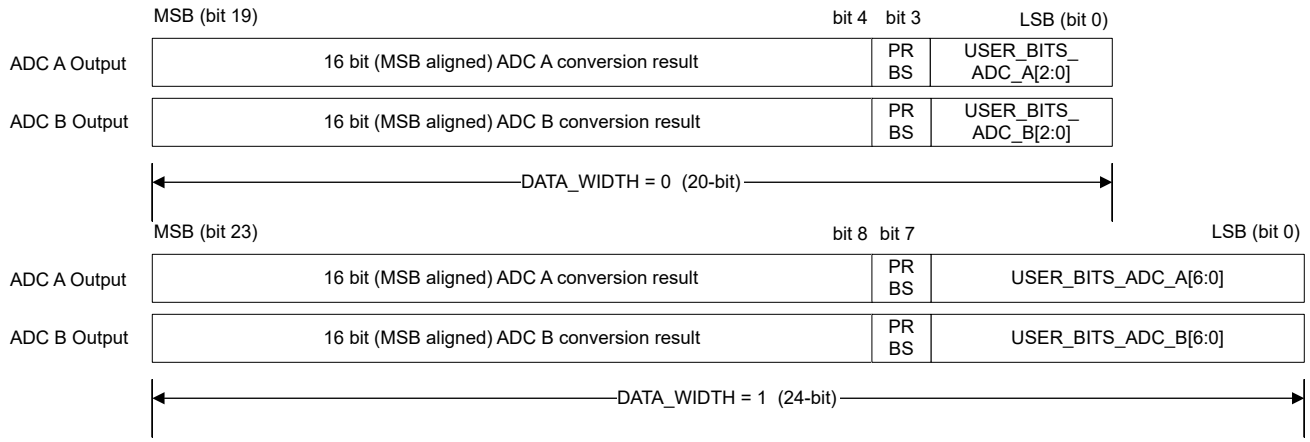

Figure 7-8. Data Frame Width Composition With PRBS XOR Enabled

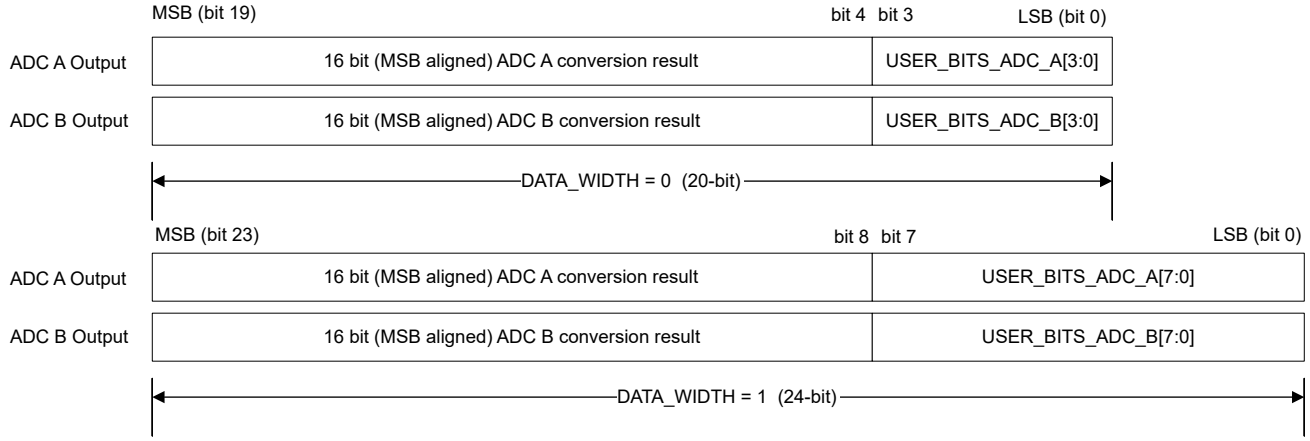

Figure 7-9. Data Frame Width Composition With LSB XOR Enabled

7.3.8.3 Synchronizing Multiple ADCs

Drive the SMPL_CLK pins of the respective ADS922x devices with a common sampling clock. Match the timing delay on the clock path external to the ADCs by using identical PCB trace lengths for SMPL_CLK for the respective ADCs.

Use the SMPL_SYNC pin to synchronize multiple ADCs when using the internal decimation filter. The SMPL_SYNC pin is latched by the falling edge of the sampling clock. A pulse on SMPL_SYNC resets the internal decimation filter.

Copyright © 2025 Texas Instruments Incorporated

7.3.9 Test Patterns for Data Interface

The ADS922x features test patterns (Figure 7-10) used by the host for debugging and verifying the data interface. The test patterns replace the ADC output data with predefined digital data. Enable the test patterns by configuring the corresponding register addresses 0x13 through 0x1B in bank 1.

Table 7-10 lists the test patterns supported by the ADS922x.

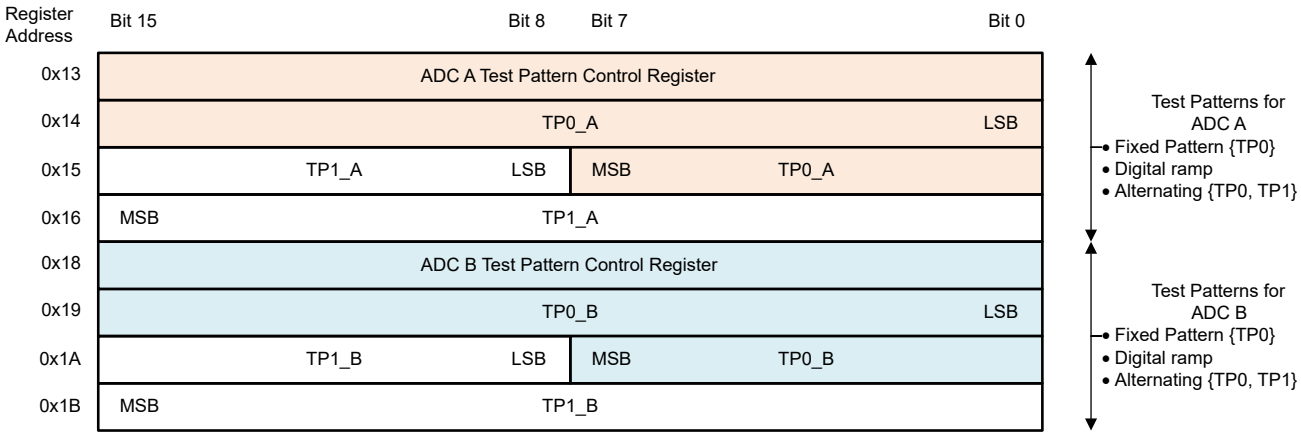

Figure 7-10. Register Bank for Test Patterns

Table 7-10. Test Pattern Configurations

ADC OUTPUT	TP_EN_CHA TP_EN_CHB	TP_MODE_CHA TP_MODE_CHB	SECTION	RESULT[1]
ADC conversion result	0	—	—	—
Fixed pattern	1	0 or 1	*Fixed Pattern*	ADC A = TP0_A ADC B = TP0_B
Digital ramp	1	2	*Digital Ramp*	ADC A = Digital ramp ADC B = Digital ramp
Alternating test patterns	1	3	*Alternating Test Pattern*	ADC A = TP0_A, TP1_A ADC B = TP0_B, TP1_B

Note

1. Configure the test patterns for two separate channel groups ADC A and ADC B.

7.3.9.1 Fixed Pattern

The ADC outputs fixed patterns defined in the TP0_A and TP0_B registers in place of the ADC A and ADC B data, respectively.

- Configure the test patterns in TP0_A and TP0_B
- Set TP_EN_A = 1, TP_MODE_A = 0 (address = 0x13), TP_EN_B = 1, and TP_MODE_B = 0 (address = 0x18)

7.3.9.2 Digital Ramp

The ADC outputs digital ramp values with increments specified in the RAMP_INC_A and RAMP_INC_B registers in place of ADC A and ADC B data, respectively.

- Configure the increment value between two successive steps of the digital ramp in the RAMP_INC_A (address = 0x13) and RAMP_INC_B (address = 0x18) registers, respectively. The digital ramp increments by N + 1, where N is the value configured in these registers.
- Set TP_EN_A = 1, TP_MODE_A = 2 (address = 0x13), TP_EN_B = 1, and TP_MODE_B = 2 (address = 0x18)

Copyright © 2025 Texas Instruments Incorporated

7.3.9.3 Alternating Test Pattern

The ADC outputs alternating test patterns defined in the TP0_A, TP1_A and TP0_B, TP1_B registers in place of ADC A and ADC B data, respectively.

- Configure the test patterns in TP0_A, TP1_A, TP0_B, and TP1_B
- Set TP_EN_A = 1, TP_MODE_A = 3 (address = 0x13), TP_EN_B = 1, and TP_MODE_B = 3 (address = 0x18)

7.3.10 ADC Sampling Clock Input

Use a low-jitter external clock with a high slew rate to maximize SNR performance. Operate the ADS922x with a differential or single-ended clock input. Clock amplitude impacts the ADC aperture jitter and, consequently, the SNR. For maximum SNR performance, provide a clock signal with fast slew rates that maximizes swing between VDD_1V8 and GND levels.

Make sure the sampling clock is a free-running continuous clock. The ADC generates a valid output data, data clock, and frame clock $t_{PU_SMPL_CLK}$, as specified in the *Switching Characteristics* after a free-running sampling clock is applied. When the sampling clock is stopped, the ADC is in power-down and the output data, data clock, and frame clock are invalid.

Figure 7-11 shows a diagram of the differential sampling clock input. For this configuration, connect the differential sampling clock input to the SMPL_CLKP and SMPL_CLKM pins. Figure 7-12 shows a diagram of the single-ended sampling clock input. In this configuration, connect the single-ended sampling clock to SMPL_CLKP and connect SMPL_CLKM to ground.

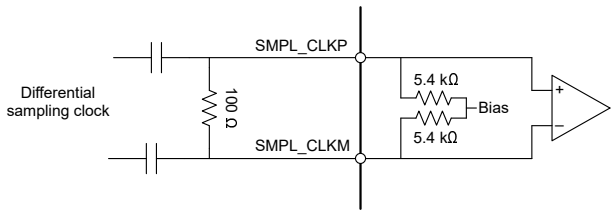

Figure 7-11. AC-Coupled Differential Sampling Clock

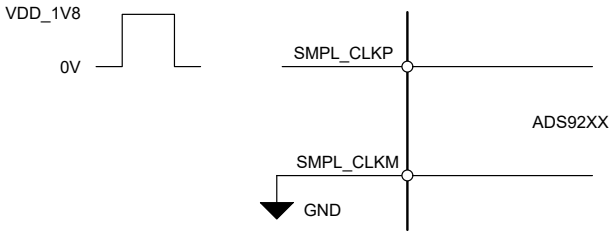

Figure 7-12. Single-Ended Sampling Clock

Copyright © 2025 Texas Instruments Incorporated

7.4 Device Functional Modes

7.4.1 Reset

Power down the ADS922x with a logic 0 on the $\overline{\text{RESET}}$ pin or write 1b to the RESET field (address 0x00, register bank 0). The device registers are initialized to the default values after reset. Register write operations are not required for initializing the ADS9228.

7.4.2 Power-Down Options

Power down the ADS922x with a logic 0 on the $\overline{\text{PWDN}}$ pin or write 11b to the PD_CH field (address 0xC0, register bank 1). The device registers are initialized to the default values after power-up. Register write operations are not required for initializing the ADS9228.

7.4.3 Normal Operation

In normal operating mode, the ADS922x is powered-up and digitizes the analog inputs at the falling edge of the sampling clock. The ADC outputs the data clock, frame clock, and MSB-aligned, 16-bit conversion result.

7.4.4 Initialization Sequence

The ADS922x register map is initialized with default values on power-up. Table 7-11 lists the steps to enable gain-error calibration (recommended) and change the output data interface. For the ADS9229 only, follow the initialization steps in Table 7-12.

Table 7-11. User-Defined Configuration for the ADS9229, ADS9228, and ADS9227

STEP NUMBER	REGISTER			COMMENT
	BANK	ADDRESS	VALUE[15:0]	
1	1	0x0D	User defined	Enable gain error calibration and select ADC output data format
2	1	0x33	0x2040	Enable gain error calibration
3	0	0x04	0x0000 for data frame width = 24 bits and output lanes = 2 0x000B for other combinations of data frame width and output lanes	

Table 7-12. Initialization Configuration for the ADS9229 Only

STEP NUMBER	REGISTER		
	BANK	ADDRESS	VALUE[15:0]
1	1	0x0D [9:8]	0x3
2	1	0x34 [1]	0x1

Copyright © 2025 Texas Instruments Incorporated

7.5 Programming

7.5.1 Register Write

Register write access is enabled by setting SPI_RD_EN = 0b. The 16-bit configuration registers are grouped in three register banks and are addressable with an 8-bit register address. Register bank 1 and register bank 2 are selected for read or write operation by configuring the REG_BANK_SEL bits. Registers in bank 0 are always accessible, irrespective of the REG_BANK_SEL bits. The register addresses in bank 0 are unique and are not used in register banks 1 and 2.

As shown in Figure 7-13, steps to write to a register are:

1. Frame 1: Write to register address 0x03 in register bank 0 to select either register bank 1 or bank 2 for a subsequent register write. This frame has no effect when writing to registers in bank 0.
2. Frame 2: Write to a register in the bank selected in frame 1. Repeat this step for writing to multiple registers in the same register bank.

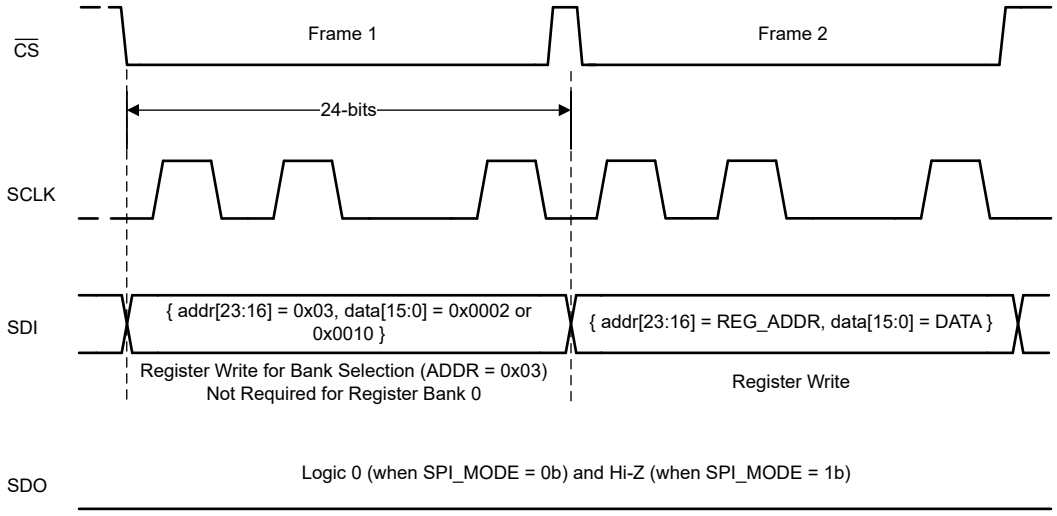

Figure 7-13. Register Write

7.5.2 Register Read

Select the desired register bank by writing to register address 0x03 in register bank 0. Register read access is enabled by setting SPI_RD_EN = 1b and SPI_MODE = 1b in register bank 0. As illustrated in Figure 7-14, registers are read using two 24-bit SPI frames after SPI_RD_EN and SPI_MODE are set. The first SPI frame selects the register bank. The ADC returns the 16-bit register value in the second SPI frame corresponding to the 8-bit register address.

As illustrated in Figure 7-14, steps to read a register are:

1. Frame 1: With SPI_RD_EN = 0b, write to register address 0x03 in register bank 0 to select the desired register bank for reading.
2. Frame 2: Set SPI_RD_EN = 1b and SPI_MODE = 1b in register address 0x00 in register bank 0.
3. Frame 3: Read any register in the selected bank using a 24-bit SPI frame containing the desired register address. Repeat this step with the address of any register in the selected bank to read the corresponding register.
4. Frame 4: Set SPI_RD_EN = 0 to disable register reads and re-enable register writes.
5. Repeat steps 1 through 4 to read registers in a different bank.

Copyright © 2025 Texas Instruments Incorporated

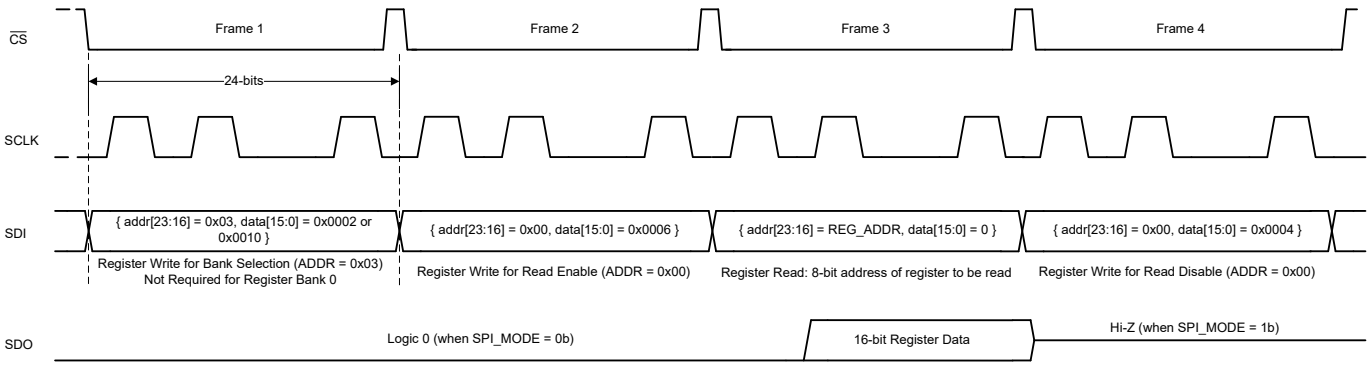

Figure 7-14. Register Read

7.5.3 Multiple Devices: Daisy-Chain Topology for SPI Configuration

Figure 7-15 shows a typical connection diagram with multiple devices in a daisy-chain topology.

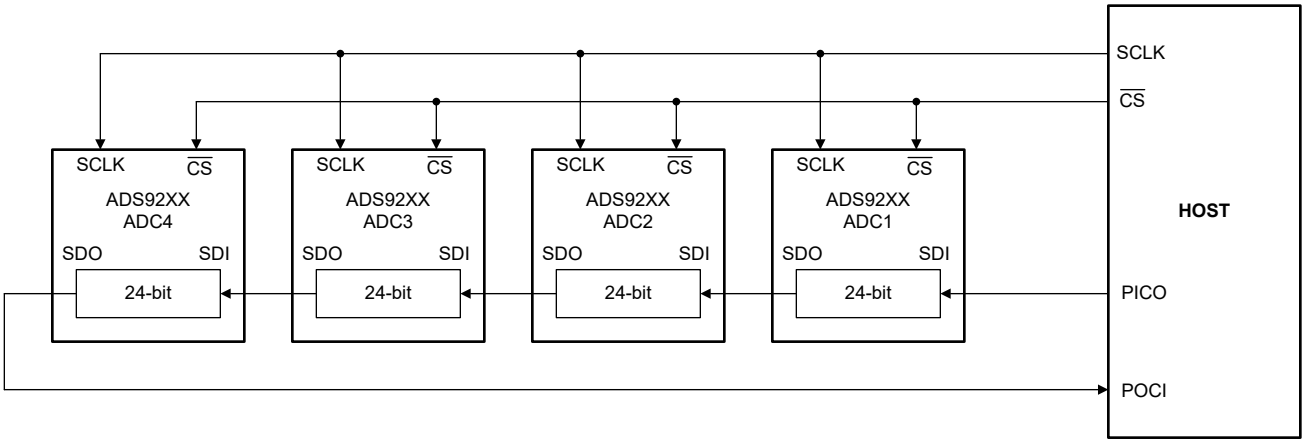

Figure 7-15. Daisy-Chain Connections for SPI Configuration

The $\overline{CS}$ and SCLK inputs of all ADCs are connected together and controlled by a single $\overline{CS}$ and SCLK pin of the controller, respectively. The SDI input pin of the first ADC in the chain (ADC1) is connected to the peripheral IN controller OUT (PICO) pin of the controller. The SDO output pin of ADC1 is connected to the SDI input pin of ADC2, and so on. The SDO output pin of the last ADC in the chain (ADC4) is connected to the peripheral OUT controller IN (POCI) pin of the controller. The data on the PICO pin passes through ADC1 with a 24-SCLK delay, as long as $\overline{CS}$ is active.

Enable daisy-chain mode after power-up or after the device is reset. Set the daisy-chain length in the DAISY_CHAIN_LEN register to enable daisy-chain mode. The daisy-chain length is the number of ADCs in the chain, excluding ADC1. In Figure 7-15, the DAISY_CHAIN_LEN is 3.

7.5.3.1 Register Write With Daisy-Chain

Writing to registers in daisy-chain configuration requires N × 24 SCLKs in one SPI frame. Register writes in a daisy-chain configuration containing four ADCs, as illustrated in Figure 7-15, requires 96 SCLKs.

The daisy-chain mode is enabled on power-up or after device reset. Configure the DAISY_CHAIN_LEN field to enable daisy-chain mode. Repeat the waveform in Figure 7-16 N times, where N is the number of ADCs in the daisy chain. Figure 7-17 provides the SPI waveform, containing N SPI frames, for enabling daisy-chain mode for N ADCs.

Copyright © 2025 Texas Instruments Incorporated

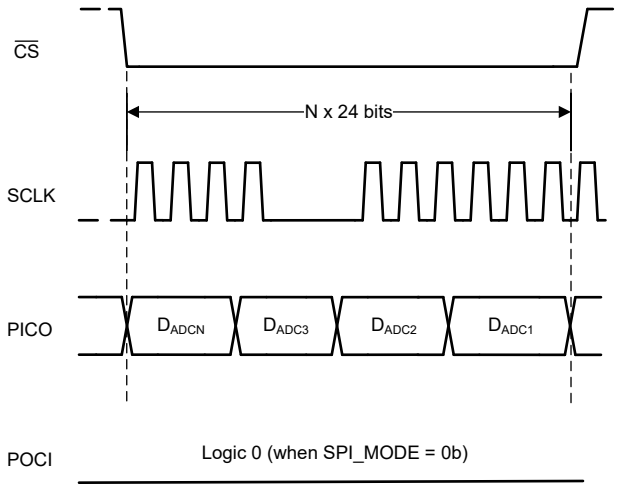

Figure 7-16. Register Write With Daisy-Chain

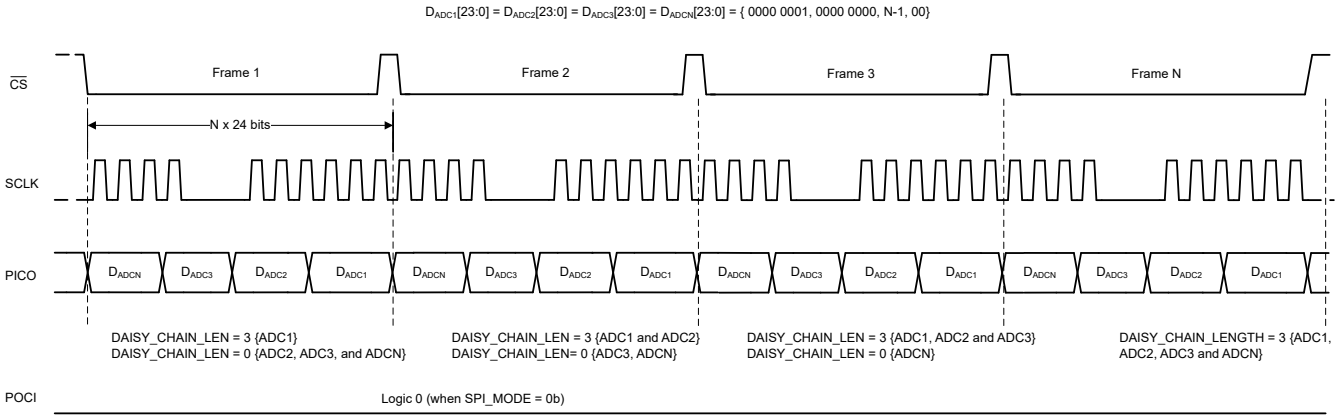

Figure 7-17. Register Write to Configure Daisy-Chain Length

7.5.3.2 Register Read With Daisy-Chain

Figure 7-18 illustrates an SPI waveform for reading registers in daisy-chain configuration. Steps for reading registers from N ADCs connected in daisy-chain are:

1. Register read is enabled by writing to the following registers:
   a. Write to REG_BANK_SEL to select the desired register bank
   b. Enable register reads by writing SPI_RD_EN = 0b (default on power-up)
2. With the register bank selected and SPI_RD_EN = 0b, the controller reads register data by:
   a. N × 24-bit SPI frame containing the 8-bit register address to be read: N times (0xFE, 0x00, 8-bit register address)
   b. N × 24-bit SPI frame to read out register data: N times (0xFF, 0xFF, 0xFF)

The 0xFE in step 2a configures the ADC for register read from the specified 8-bit address. At the end of step 2a, the output shift register in the ADC is loaded with register data. The ADC returns the 8-bit register address and corresponding 16-bit register data in step 2b.

Copyright © 2025 Texas Instruments Incorporated

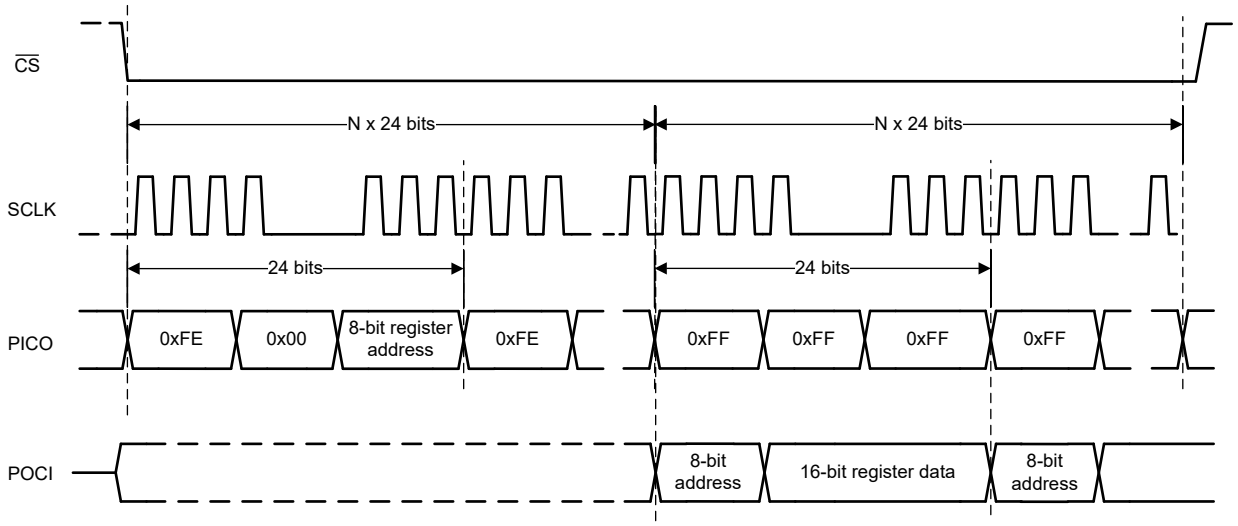

Figure 7-18. Register Read With Daisy-Chain Configuration

8 Register Map

8.1 Register Bank 0

Figure 8-1. Register Bank 0 Map

ADD	D15	D14	D13	D12	D11	D10	D9	D8	D7	D6	D5	D4	D3	D2	D1	D0
00h	RESERVED													SPI_MODE	SPI_RD_EN	RESET
01h	RESERVED									DAISY_CHAIN_LEN					RESERVED	
03h	RESERVED									REG_BANK_SEL						
04h	RESERVED													INIT_1		
06h	REG_00H_READBACK															

Table 8-1. Register Section/Block Access Type Codes

Access Type	Code	Description
R	R	Read
W	W	Write
R/W	R/W	Read or write
Reset or Default Value		
-n		Value after reset or the default value

8.1.2 Register 00h (offset = 0h) [reset = 0h]

Figure 8-2. Register 00h

15	14	13	12	11	10	9	8
RESERVED							
W-0h							
7	6	5	4	3	2	1	0
RESERVED					SPI_MODE	SPI_RD_EN	RESET
W-0h					W-0h	W-0h	W-0h

Figure 8-3. Register 00h Field Descriptions

Bit	Field	Type	Reset	Description
15-3	RESERVED	W	0h	Reserved. Do not change from the default reset value.
2	SPI_MODE	W	0h	Select between legacy SPI mode and daisy-chain SPI mode for the configuration interface for register access. 0 : Daisy-chain SPI mode 1 : Legacy SPI mode
1	SPI_RD_EN	W	0h	Enable register read access in legacy SPI mode. This bit has no effect in daisy-chain SPI mode. 0 : Register read disabled 1 : Register read enabled
0	RESET	W	0h	ADC reset control. 0 : Normal device operation 1 : Reset all registers

Copyright © 2025 Texas Instruments Incorporated

8.1.3 Register 01h (offset = 1h) [reset = 0h]

Figure 8-4. Register 01h

15	14	13	12	11	10	9	8
RESERVED							
R/W-0h							
7	6	5	4	3	2	1	0
RESERVED	DAISY_CHAIN_LEN					RESERVED	
R/W-0h	R/W-0h					R/W-0h	

Figure 8-5. Register 01h Field Descriptions

Bit	Field	Type	Reset	Description
15-7	RESERVED	R/W	0h	Reserved. Do not change from the default reset value.
6-2	DAISY_CHAIN_LEN	R/W	0h	Configure the number of ADCs connected in daisy-chain for the SPI configuration. 0 : 1 ADC 1 : 2 ADCs 31 : 32 ADCs
1-0	RESERVED	R/W	0h	Reserved. Do not change from the default reset value.

8.1.4 Register 03h (offset = 3h) [reset = 2h]

Figure 8-6. Register 03h

15	14	13	12	11	10	9	8
RESERVED							
R/W-0h							
7	6	5	4	3	2	1	0
REG_BANK_SEL							
R/W-2h							

Figure 8-7. Register 03h Field Descriptions

Bit	Field	Type	Reset	Description
15-8	RESERVED	R/W	0h	Reserved. Do not change from the default reset value.
7-0	REG_BANK_SEL	R/W	2h	Register bank selection for read and write operations. 0 : Select register bank 0 2 : Select register bank 1 16 : Select register bank 2

Copyright © 2025 Texas Instruments Incorporated

8.1.5 Register 04h (offset = 4h) [reset = 0h]

Figure 8-8. Register 04h

15	14	13	12	11	10	9	8
RESERVED							
R-0h							
7	6	5	4	3	2	1	0
RESERVED				INIT_1			
R/W-0h							

Figure 8-9. Register 04h Field Descriptions

Bit	Field	Type	Reset	Description
3-0	INIT_1	R/W	0h	INIT_1 field for device initialization. Write 1011b during the initialization sequence. Write 0000b for normal operation.

8.1.6 Register 06h (offset = 6h) [reset = 2h]

Figure 8-10. Register 06h

15	14	13	12	11	10	9	8
REG_00H_READBACK							
R-0h							
7	6	5	4	3	2	1	0
REG_00H_READBACK							
R-5h							

Figure 8-11. Register 06h Field Descriptions

Bit	Field	Type	Reset	Description
15-0	REG_00H_READBACK	R	2h	This register is a copy of the register address 0x00 for readback. The register address 0x00 is write-only. The default readback value is 2h because SPI_RD_EN in address 0x00 is required to be set to 1 for register reads.

Copyright © 2025 Texas Instruments Incorporated

8.2 Register Bank 1

Figure 8-12. Register Bank 1 Map

ADD	D15	D14	D13	D12	D11	D10	D9	D8	D7	D6	D5	D4	D3	D2	D1	D0
0Dh	RESERVED		DATA_FORMAT	RESERVED			LAT_INC		GE_CAL_EN1	OSR_EN	OSR				RESERVED	
10h	RESERVED															HI_FREQ
12h	RESERVED												XOR_EN	DATA_LANES		
13h	RESERVED								RAMP_INC_A				TP_MODE_CHA		TP_EN_CHA	RESERVED
14h	TP0_A															
15h	TP1_A								TP0_A							
16h	TP1_A															
18h	RESERVED								RAMP_INC_B				TP_MODE_CHB		TP_EN_CHB	RESERVED
19h	TP0_B															
1Ah	TP1_B								TP0_B							
1Bh	TP1_B															
1Ch	USER_BITS_ADC_B								USER_BITS_ADC_A							
33h	RESERVED		GE_CAL_EN3	RESERVED						GE_CAL_EN2	RESERVED					
34h	RESERVED											LAT_EN	RESERVED			
90h	RESERVED	TS_LD	RESERVED													
91h	RESERVED						TEMPERATURE_SENSOR									
C0h	RESERVED			CLK1	OSR_INIT1		OSR_CLK			RESERVED					PD_CH	
C1h	RESERVED				PD_REF	RESERVED		DATA_RATE	RESERVED							CLK2
C4h	RESERVED										OSR_INIT2		RESERVED		OSR_INIT3	PD_CHIP
C5h	RESERVED		HI_FREQ_EN	RESERVED			CLK3	RESERVED		RD_CLK		RESERVED	CLK4		RESERVED	
FBh	RESERVED												NCO_SYSREF	XOR_MODE	CLK5	MIXER_EN
FCh	NCO_PHASE_COUNT[15:0]															
FDh	NCO_FREQUENCY[7:0]								NCO_PHASE_COUNT[23:16]							
FEh	NCO_FREQUENCY[23:8]															

Table 8-2. Register Section/Block Access Type Codes

Access Type	Code	Description
R	R	Read
W	W	Write
R/W	R/W	Read or write
Reset or Default Value		
-n		Value after reset or the default value

8.2.1 Register 0Dh (offset = Dh) [reset = 2002h]

Figure 8-13. Register 0Dh

15	14	13	12	11	10	9	8
RESERVED		DATA_FORMAT	RESERVED			LAT_INC	
R/W-0h		R/W-1h	R/W-0h			R/W-0h	
7	6	5	4	3	2	1	0
GE_CAL_EN1	OSR_EN	OSR				RESERVED	
R/W-0h	R/W-0h	R/W-0h				R/W-2h	

Figure 8-14. Register 0Dh Field Descriptions

Bit	Field	Type	Reset	Description
15-14	RESERVED	R/W	0h	Reserved. Do not change from the default reset value.
13	DATA_FORMAT	R/W	1h	Select data format for the ADC conversion result. 0 : Straight binary format 1 : Two's-complement format
12-10	RESERVED	R/W	0h	Reserved. Do not change from the default reset value.
9-8	LAT_INC	R/W	0h	For ADS9229, set this field to 11b for optimum INL performance.
7	GE_CAL_EN1	R/W	0h	Global control for gain error calibration. 0 : Gain error calibration disabled for all channels 1 : Gain error calibration enabled for all channels
6	OSR_EN	R/W	0h	Control for data averaging depth. 0 : Data averaging disabled 1 : Data averaging enabled
5-2	OSR	R/W	0h	Control for enabling data averaging. 0 : 2 samples averaged 1 : 4 samples averaged 2 : 8 samples averaged 3 : 16 samples averaged
1-0	RESERVED	R/W	2h	Reserved. Do not change from the default reset value.

8.2.2 Register 10h (offset = 10h) [reset = 0h]

Figure 8-15. Register 10h

15	14	13	12	11	10	9	8
RESERVED							
R/W-0h							
7	6	5	4	3	2	1	0
RESERVED							RESERVED
R/W-0h							R/W-0h

Figure 8-16. Register 10h Field Descriptions

Bit	Field	Type	Reset	Description
15-1	RESERVED	R/W	0h	Reserved. Do not change from the default reset value.
0	HI_FREQ	R/W	0h	Analog input fast slew rate control 0: Normal slew rate 1: Fast slew rate. Fast analog input control enabled. Recommended for input frequencies >2MHz.See also HI_FREQ_EN.

Copyright © 2025 Texas Instruments Incorporated

8.2.3 Register 12h (offset = 12h) [reset = 2h]

Figure 8-17. Register 12h

15	14	13	12	11	10	9	8
RESERVED							
R/W-0h							
7	6	5	4	3	2	1	0
RESERVED				XOR_EN	DATA_LANES		
R/W-0h				R/W-0h	R/W-2h		

Figure 8-18. Register 12h Field Descriptions

Bit	Field	Type	Reset	Description
15-4	RESERVED	R/W	0h	Reserved. Do not change from the default reset value.
3	XOR_EN	R/W	0h	Enables XOR operation on ADC conversion result. 0 : XOR operation is disabled 1 : ADC conversion result is bit-wise XOR with the PRBS bit by default
2-0	DATA_LANES	R/W	2h	Selects the number of output data lanes and number of data bits per output lane. Enables XOR operation on ADC conversion result. 0 : ADC A and B data output on DOUTA and DOUTB respectively; 20 bits per ADC. 2 : ADC A and B data output on DOUTA and DOUTB respectively; 24 bits per ADC. 5 : ADC A and B data output on DOUTA; 20 bits per ADC. 7 : ADC A and B data output on DOUTA; 24 bits per ADC.

Copyright © 2025 Texas Instruments Incorporated

8.2.4 Register 13h (offset = 13h) [reset = 0h]

Figure 8-19. Register 13h

15	14	13	12	11	10	9	8
RESERVED							
R/W-0h							
7	6	5	4	3	2	1	0
RAMP_INC_A				TP_MODE_A		TP_EN_A	RESERVED
R/W-0h				R/W-0h		R/W-0h	R/W-0h

Figure 8-20. Register 13h Field Descriptions

Bit	Field	Type	Reset	Description
15-8	RESERVED	R/W	0h	Reserved. Do not change from the default reset value.
7-4	RAMP_INC_A	R/W	0h	Increment value for the ramp pattern output. The output ramp increments by N+1, where N is the value configured in this register.
3-2	TP_MODE_A	R/W	0h	Select digital test pattern for ADC A. 0 : Fixed pattern from the TP0_A register 1 : Fixed pattern from the TP0_A register 2 : Digital ramp output 3 : Alternate fixed pattern output from the TP0_A and TP1_A registers
1	TP_EN_A	R/W	0h	Enable digital test pattern for data corresponding to ADC A. 0 : Data output is the ADC conversion result 1 : Data output is the digital test pattern for ADC A
0	RESERVED	R/W	0h	Reserved. Do not change from the default reset value.

8.2.5 Register 14h (offset = 14h) [reset = 0h]

Figure 8-21. Register 14h

15	14	13	12	11	10	9	8
TP0_A[15:0]							
R/W-0h							
7	6	5	4	3	2	1	0
TP0_A[15:0]							
R/W-0h							

Figure 8-22. Register 14h Field Descriptions

Bit	Field	Type	Reset	Description
15-0	TP0_A[15:0]	R/W	0h	Lower 16 bits of test pattern 0

Copyright © 2025 Texas Instruments Incorporated

8.2.6 Register 15h (offset = 15h) [reset = 0h]

Figure 8-23. Register 15h

15	14	13	12	11	10	9	8
TP1_A[7:0]							
R/W-0h							
7	6	5	4	3	2	1	0
TP0_A[23:16]							
R/W-0h							

Figure 8-24. Register 15h Field Descriptions

Bit	Field	Type	Reset	Description
15-8	TP1_A[7:0]	R/W	0h	Lower eight bits of test pattern 1
7-0	TP0_A[23:16]	R/W	0h	Upper eight bits of test pattern 0

8.2.7 Register 16h (offset = 16h) [reset = 0h]

Figure 8-25. Register 16h

15	14	13	12	11	10	9	8
TP1_A[23:8]							
R/W-0h							
7	6	5	4	3	2	1	0
TP1_A[23:8]							
R/W-0h							

Figure 8-26. Register 16h Field Descriptions

Bit	Field	Type	Reset	Description
15-0	TP1_A[23:8]	R/W	0h	Upper 16 bits of test pattern 1

Copyright © 2025 Texas Instruments Incorporated

8.2.8 Register 18h (offset = 18h) [reset = 0h]

Figure 8-27. Register 18h

15	14	13	12	11	10	9	8
RESERVED							
R/W-0h							
7	6	5	4	3	2	1	0
RAMP_INC_B				TP_MODE_B		TP_EN_B	RESERVED
R/W-0h				R/W-0h		R/W-0h	R/W-0h

Figure 8-28. Register 18h Field Descriptions

Bit	Field	Type	Reset	Description
15-8	RESERVED	R/W	0h	Reserved. Do not change from the default reset value.
7-4	RAMP_INC_B	R/W	0h	Increment value for the ramp pattern output. The output ramp increments by N+1, where N is the value configured in this register.
3-2	TP_MODE_B	R/W	0h	Select digital test pattern for ADC B. 0 : Fixed pattern from the TP0_B register 1 : Fixed pattern from the TP0_B register 2 : Digital ramp output 3 : Alternate fixed pattern output from the TP0_B and TP1_B registers
1	TP_EN_B	R/W	0h	Enable digital test pattern for data corresponding to ADC B. 0 : Data output is the ADC conversion result 1 : Data output is the digital test pattern
0	RESERVED	R/W	0h	Reserved. Do not change from the default reset value.

8.2.9 Register 19h (offset = 19h) [reset = 0h]

Figure 8-29. Register 19h

15	14	13	12	11	10	9	8
TP0_B[15:0]							
R/W-0h							
7	6	5	4	3	2	1	0
TP0_B[15:0]							
R/W-0h							

Figure 8-30. Register 19h Field Descriptions

Bit	Field	Type	Reset	Description
15-0	TP0_B[15:0]	R/W	0h	Lower 16 bits of test pattern 0

Copyright © 2025 Texas Instruments Incorporated

8.2.10 Register 1Ah (offset = 1Ah) [reset = 0h]

Figure 8-31. Register 1Ah

15	14	13	12	11	10	9	8
TP1_B[7:0]							
R/W-0h							
7	6	5	4	3	2	1	0
TP0_B[23:16]							
R/W-0h							

Figure 8-32. Register 1Ah Field Descriptions

Bit	Field	Type	Reset	Description
15-8	TP1_B[7:0]	R/W	0h	Lower eight bits of test pattern 1
7-0	TP0_B[23:16]	R/W	0h	Upper eight bits of test pattern 0

8.2.11 Register 1Ch (offset = 1Ch) [reset = 0h]

Figure 8-33. Register 1Ch

15	14	13	12	11	10	9	8
USER_BITS_ADC_B							
R/W-0h							
7	6	5	4	3	2	1	0
USER_BITS_ADC_A							
R/W-0h							

Figure 8-34. Register 1Ch Field Descriptions

Bit	Field	Type	Reset	Description
15-8	USER_BITS_ADC_B	R/W	0h	User-defined bits appended to the ADC conversion result from ADC B.
7-0	USER_BITS_ADC_A	R/W	0h	User-defined bits appended to the ADC conversion result from ADC A.

Copyright © 2025 Texas Instruments Incorporated

8.2.12 Register 33h (offset = 33h) [reset = 0h]

Figure 8-35. Register 33h

15	14	13	12	11	10	9	8
RESERVED		GE_CAL_EN3	RESERVED				
R/W-0h		R/W-0h	R/W-0h				
7	6	5	4	3	2	1	0
RESERVED	GE_CAL_EN2	RESERVED					
R/W-0h	R/W-0h	R/W-0h					

Figure 8-36. Register 33h Field Descriptions

Bit	Field	Type	Reset	Description
15-14	RESERVED	R/W	0h	Reserved. Do not change from the default reset value.
13	GE_CAL_EN3	R/W	0h	Global control for gain error calibration. 0 : Gain error calibration disabled for all channels 1 : Gain error calibration enabled for all channels
12-7	RESERVED	R/W	0h	Reserved. Do not change from the default reset value.
6	GE_CAL_EN2	R/W	0h	Global control for gain error calibration. 0 : Gain error calibration disabled for all channels 1 : Gain error calibration enabled for all channels
5-0	RESERVED	R/W	0h	Reserved. Do not change from the default reset value.

8.2.13 Register 34h (offset = 34h) [reset = 0h]

Figure 8-37. Register 34h

15	14	13	12	11	10	9	8
RESERVED							
R/W-0h							
7	6	5	4	3	2	1	0
RESERVED			LAT_EN	RESERVED			
R/W-0h			R/W-0h	R/W-0h			

Figure 8-38. Register 34h Field Descriptions

Bit	Field	Type	Reset	Description
15-5	RESERVED	R/W	0h	Reserved. Do not change from the default reset value.
4	LAT_EN	R/W	0h	For ADS9229, set this field to 11b for optimum INL performance.
3-0	RESERVED	R/W	0h	Reserved. Do not change from the default reset value.

Copyright © 2025 Texas Instruments Incorporated

8.2.14 Register 90h (offset = 90h) [reset = 0h]

Figure 8-39. Register 90h

15	14	13	12	11	10	9	8
RESERVED	TS_LD	RESERVED					
R/W-0h	R/W-0h	R/W-0h					
7	6	5	4	3	2	1	0
RESERVED							
R/W-0h							

Figure 8-40. Register 90h Field Descriptions

Bit	Field	Type	Reset	Description
15	RESERVED	R/W	0h	Reserved. Do not change from the default reset value.
14	TS_LD	R/W	0h	Trigger to load temperature sensor output in address 0x91. Transition from 0 to 1 if this bit triggers the data load operation.
13-0	RESERVED	R/W	0h	Reserved. Do not change from the default reset value.

8.2.15 Register 91h (offset = 91h) [reset = 00h]

Figure 8-41. Register 91h

15	14	13	12	11	10	9	8
RESERVED						TEMPERATURE_SENSOR	
R/W-0h						R/W-0h	
7	6	5	4	3	2	1	0
TEMPERATURE_SENSOR							
R/W-0h							

Figure 8-42. Register 91h Field Descriptions

Bit	Field	Type	Reset	Description
15-10	RESERVED	R/W	0h	Reserved. Do not change from the default reset value.
9-0	TEMPERATURE_SENSOR	R/W	0h	10-bit temperature sensor output. See the *Temperature Sensor* section.

Copyright © 2025 Texas Instruments Incorporated

8.2.16 Register C0h (offset = C0h) [reset = 0h]

Figure 8-43. Register C0h

15	14	13	12	11	10	9	8
RESERVED			CLK1	OSR_INIT1		OSR_CLK	
R/W-0h			R/W-0h	R/W-0h	R/W-0h	R/W-0h	
7	6	5	4	3	2	1	0
OSR_CLK	RESERVED					PD_CH	
R/W-0h	R/W-0h					R/W-0h	

Figure 8-44. Register C0h Field Descriptions

Bit	Field	Type	Reset	Description
15-13	RESERVED	R/W	0h	Reserved. Do not change from the default reset value.
12	CLK1	R/W	0h	Selects the clock configuration based on output data-lanes. 0 : Configuration for DATA_LANES = 0 or 2 1 : Configuration for DATA_LANES = 5 or 7
11-10	OSR_INIT1	R/W	0h	Initialization for data averaging. 0 : Configuration for disabling data averaging 1 : Configuration for enabling data averaging
9-7	OSR_CLK	R/W	0h	Data output clock configuration for data averaging. See Table 7-4 for more details.
6-2	RESERVED	R/W	0h	Reserved. Do not change from the default reset value.
1-0	PD_CH	R/W	0h	Power-down control for the analog input channels. 0 : Normal operation 1 : ADC A powered down 2 : ADC B powered down 3 : ADC A and B powered down

Copyright © 2025 Texas Instruments Incorporated

8.2.17 Register C1h (offset = C1h) [reset = 0h]

Figure 8-45. Register C1h

15	14	13	12	11	10	9	8
RESERVED				PD_REF	RESERVED		DATA_RATE
R/W-0h				R/W-0h	R/W-0h		R/W-0h
7	6	5	4	3	2	1	0
RESERVED							CLK2
R/W-0h							R/W-0h

Figure 8-46. Register C1h Field Descriptions

Bit	Field	Type	Reset	Description
15-12	RESERVED	R/W	0h	Reserved. Do not change from the default reset value.
11	PD_REF	R/W	0h	ADC reference voltage source selection. 0 : Internal reference enabled. 1 : Internal reference disabled. Connect the external reference voltage to the REFIO pin.
10-9	RESERVED	R/W	0h	Reserved. Do not change from the default reset value.
8	DATA_RATE	R/W	0h	Select data rate for the data interface. 0 : Double data rate (DDR) 1 : Single data rate (SDR)
7-1	RESERVED	R/W	0h	Reserved. Do not change from the default reset value.
0	CLK2	R/W	0h	Select data rate for the data interface. 0 : Configuration for DATA_LANES = 2 or 7 1 : Configuration for DATA_LANES = 0 or 5

8.2.18 Register C4h (offset = C4h) [reset = 0h]

Figure 8-47. Register C4h

15	14	13	12	11	10	9	8
RESERVED							
R/W-0h							
7	6	5	4	3	2	1	0
RESERVED		OSR_INIT2		RESERVED		OSR_INIT3	PD_CHIP
R/W-0h		R/W-0h		R/W-0h		R/W-0h	R/W-0h

Figure 8-48. Register C4h Field Descriptions

Bit	Field	Type	Reset	Description
15-6	RESERVED	R/W	0h	Reserved. Do not change from the default reset value.
5-4	OSR_INIT2	R/W	0h	Initialization for data averaging. 0 : Configuration for disabling data averaging 2 : Configuration for enabling data averaging
3-2	RESERVED	R/W	0h	Reserved. Do not change from the default reset value.
1	OSR_INIT3	R/W	0h	Initialization for data averaging. 0 : Configuration for disabling data averaging 1 : Configuration for enabling data averaging
0	PD_CHIP	R/W	0h	Full chip power-down control. 0 : Normal device operation 1 : Full device powered-down

Copyright © 2025 Texas Instruments Incorporated

8.2.19 Register C5h (offset = C5h) [reset = 0h]

Figure 8-49. Register C5h

15	14	13	12	11	10	9	8
RESERVED		HI_FREQ_EN	RESERVED			CLK3	RESERVED
R/W-0h		R/W-0h	R/W-0h			R/W-0h	R/W-0h
7	6	5	4	3	2	1	0
RESERVED	RD_CLK		RESERVED	CLK4		RESERVED	
R/W-0h	R/W-0h		R/W-0h	R/W-0h		R/W-0h	

Figure 8-50. Register C5h Field Descriptions

Bit	Field	Type	Reset	Description
15-14	RESERVED	R/W	0h	Reserved. Do not change from the default reset value.
13	HI_FREQ_EN	R/W	0h	Fast analog input slew rate enable. 0: Normal slew rate 1: Fast analog input control enabled. Recommended for input frequencies >2MHz. See also HI_FREQ.
12-10	RESERVED	R/W	0h	Reserved. Do not change from the default reset value.
9	CLK3	R/W	0h	Select data rate for the data interface. 0 : Configuration for DATA_LANES = 0 or 2 1 : Configuration for DATA_LANES = 5 or 7
8 - 7	RESERVED	R/W	0h	Reserved. Do not change from the default reset value.
6-5	RD_CLK	R/W	0h	Data output clock control for data averaging. See Data Averaging for more details.
4	RESERVED	R/W	0h	Reserved. Do not change from the default reset value.
3 - 2	CLK4	R/W	0h	Clock configuration for ADS9227. See the *Data Interface* section for details. Not applicable for ADS9229 and ADS9228. 0 : 24-bit 2-lane mode 3 : all other modes
1 - 0	RESERVED	R/W	0h	Reserved. Do not change from the default reset value.

Copyright © 2025 Texas Instruments Incorporated

8.2.20 Register FBh (offset = FBh) [reset = 0h]

Figure 8-51. Register FBh

15	14	13	12	11	10	9	8
RESERVED							
R/W-0h							
7	6	5	4	3	2	1	0
RESERVED				NCO_SYSREF	XOR_MODE	CLK5	MIXER_EN
R/W-0h				R/W-0h	R/W-0h	R/W-0h	R/W-0h

Figure 8-52. Register FBh Field Descriptions

Bit	Field	Type	Reset	Description
15-4	RESERVED	R/W	0h	Reserved. Do not change from the default reset value.
3	NCO_SYSREF	R/W	0h	Set to 1b when applying periodic pulses on the SMPL_SYNC pin. 0: Synchronize the NCO with one pulse on the SMPL_SYNC pin. 1: Synchronize the NCO with the first pulse on the SMPL_SYNC pin when using periodic pulses.
2	XOR_MODE	R/W	0h	Selects the bit with which the ADC output data is XORed when XOR output mode is enabled. 0 : PRBS bit is output after the ADC LSB. ADC output data is XORed with the PRBS bit. 1 : ADC output data is XORed with the LSB of the conversion result.
1	CLK5	R/W	0h	Clock configuration for the ADS9229 and ADS9228. See the *Data Interface* section for details. Not applicable for the ADS9227. 0 : 24-bit 2-lane SDR and DDR modes 1 : 24-bit 1-lane SDR and DDR modes
0	MIXER_EN	R/W	0h	0: Digital down converter disabled 1: Digital down converter enabled

Copyright © 2025 Texas Instruments Incorporated

8.2.21 Register FCh (offset = FCh) [reset = 0h]

Figure 8-53. Register FCh

15	14	13	12	11	10	9	8
NCO_PHASE_COUNT							
R/W-0h							
7	6	5	4	3	2	1	0
NCO_PHASE_COUNT							
R/W-0h							

Figure 8-54. Register FCh Field Descriptions

Bit	Field	Type	Reset	Description
15-0	NCO_PHASE_COUNT[15:0]	R/W	0h	Lower 15 bits of the NCO phase count. See the *Digital Down Converter* section.

8.2.22 Register FDh (offset = FDh) [reset = 0h]

Figure 8-55. Register FDh

15	14	13	12	11	10	9	8
NCO_FREQUENCY							
R/W-0h							
7	6	5	4	3	2	1	0
NCO_PHASE_COUNT							
R/W-0h							

Figure 8-56. Register FDh Field Descriptions

Bit	Field	Type	Reset	Description
15-8	NCO_FREQUENCY[7:0]	R/W	0h	Lower eight bits of the NCO phase count. See the *Digital Down Converter* section.
7-0	NCO_PHASE_COUNT[23:16]	R/W	0h	Higher eight bits of the NCO phase count. See the *Digital Down Converter* section.

Copyright © 2025 Texas Instruments Incorporated

8.2.23 Register FEh (offset = FEh) [reset = 0h]

Figure 8-57. Register FEh

15	14	13	12	11	10	9	8
NCO_FREQUENCY							
R/W-0h							
7	6	5	4	3	2	1	0
NCO_FREQUENCY							
R/W-0h							

Figure 8-58. Register FEh Field Descriptions

Bit	Field	Type	Reset	Description
15-0	NCO_FREQUENCY	R/W	0h	Higher 16 bits of the NCO phase count. See the *Digital Down Converter* section.

8.3 Register Bank 2

Figure 8-59. Register Bank 2 Map

ADD	D15	D14	D13	D12	D11	D10	D9	D8	D7	D6	D5	D4	D3	D2	D1	D0
1Ch	RESERVED								CLK6		RESERVED					

Table 8-3. Register Section/Block Access Type Codes

Access Type	Code	Description
R	R	Read
W	W	Write
R/W	R/W	Read or write
Reset or Default Value		
-n		Value after reset or the default value

8.3.1 Register 1Ch (offset = 1Ch) [reset = 0h]

Figure 8-60. Register 1Ch

15	14	13	12	11	10	9	8
RESERVED							
R/W-0h							
7	6	5	4	3	2	1	0
CLK6		RESERVED					
R/W-0h		R/W-0h					

Figure 8-61. Register 1Ch Field Descriptions

Bit	Field	Type	Reset	Description
15-8	RESERVED	R/W	0h	Reserved. Do not change from the default reset value.
7-6	CLK6	R/W	0h	Clock configuration for ADS9227. See the *Data Interface* section for details. Not applicable for the ADS9229 and ADS9228. 0 : 24-bit 2-lane mode 3 : all other modes
5-0	RESERVED	R/W	0h	Reserved. Do not change from the default reset value.

Copyright © 2025 Texas Instruments Incorporated

9 Application and Implementation

Note

Information in the following applications sections is not part of the TI component specification, and TI does not warrant its accuracy or completeness. TI's customers are responsible for determining suitability of components for their purposes, as well as validating and testing their design implementation to confirm system functionality.

9.1 Application Information

The ADS922x features an integrated ADC driver, low-latency, high-speed, low AC and DC errors, and low temperature drift. These features make the ADS922x a high-performance signal-chain for applications where precision measurements with low-latency are required. The following section gives an example circuit and recommendations for using the ADS922x device family in a data acquisition (DAQ) system.

9.2 Typical Applications

9.2.1 Data Acquisition (DAQ) Circuit for ≤20kHz Input Signal Bandwidth

Figure 9-1 shows a 2-channel signal chain with minimum external components. This signal-chain significantly reduces solution size by driving the ADS922x with the 2-channel, fully differential amplifier (FDA) THS4552.

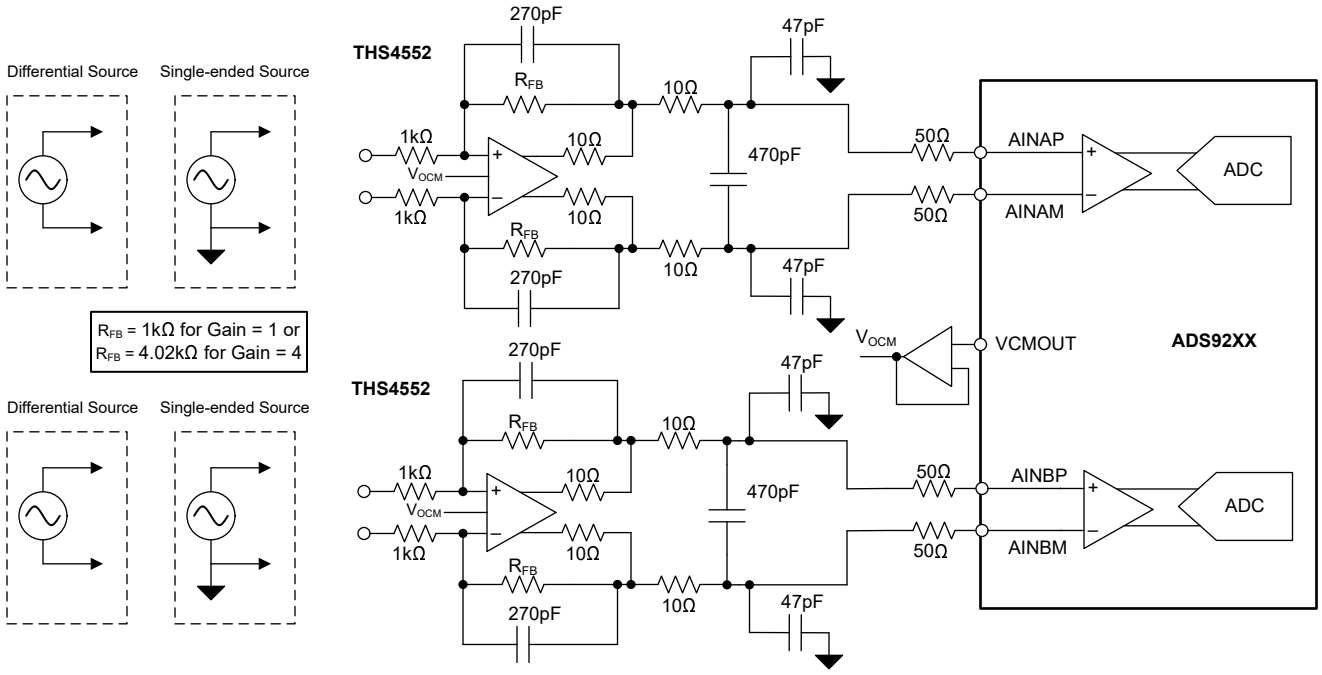

Figure 9-1. Data Acquisition (DAQ) Circuit for ≤20kHz Input Signal Bandwidth

9.2.1.1 Design Requirements

Table 9-1 lists the parameters for this typical application.

Table 9-1. Design Parameters

PARAMETER	VALUE
SNR	≥ 92dB
THD	≤ –110dB
Input signal frequency	≤ 20kHz

9.2.1.2 Detailed Design Procedure

Use the procedure discussed in this section for any ADS922x application circuit.

- All ADS922x applications require the supply decoupling as provided in the *Power Supply Recommendations* section.
- Make sure the values provided in this section meet the maximum throughput and input signal frequency design requirements given. Use a lower bandwidth signal chain when lower noise performance is required.

9.2.1.3 Application Curves

The following figures show the SNR and INL performance for the circuit in Figure 9-1, respectively.

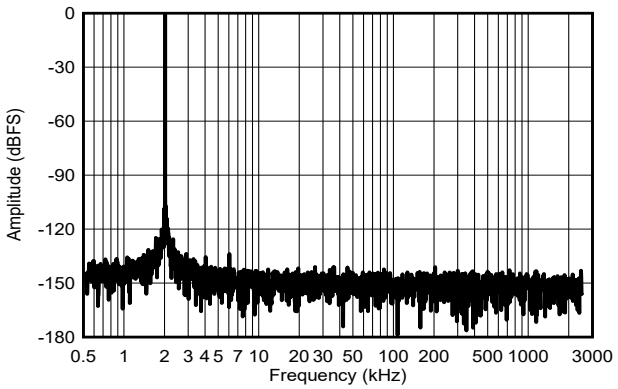

f_{IN} = 2kHz, SNR = 93.9dBFS, THD = –122.5dB

Figure 9-2. Typical FFT for f_{IN} = 2kHz

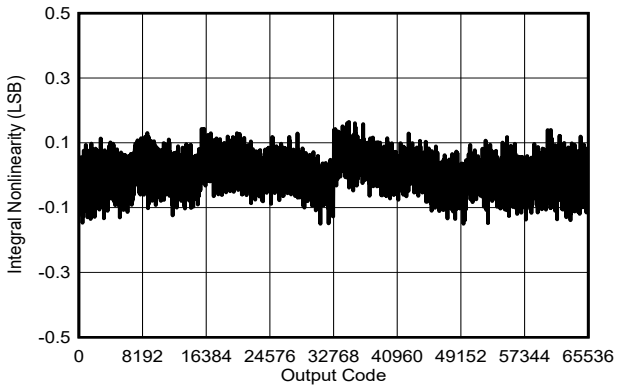

Typical INL = ±0.2LSB

Figure 9-3. Typical INL

Copyright © 2025 Texas Instruments Incorporated

9.2.2 Data Acquisition (DAQ) Circuit for ≤100kHz Input Signal Bandwidth

Figure 9-4 shows a 2-channel signal chain with minimum external components. This signal-chain significantly reduces solution size by driving the ADS922x with the 2-channel, fully differential amplifier (FDA) THS4552.

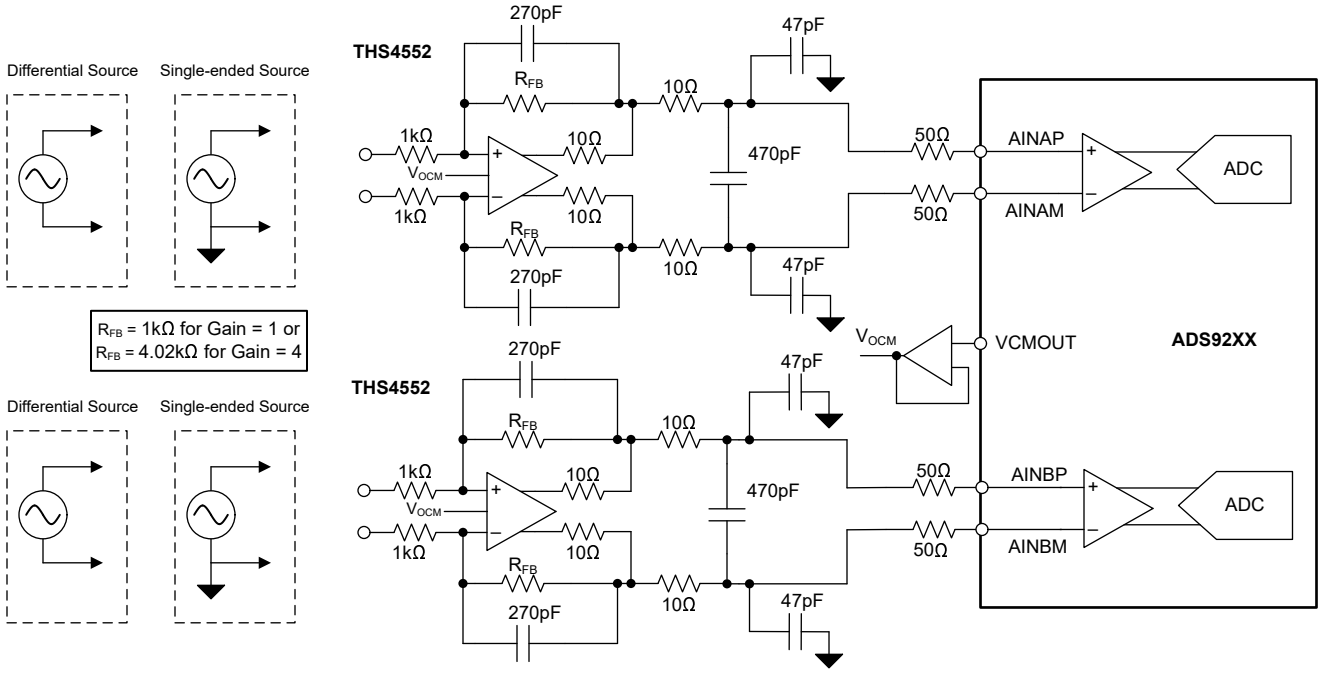

Figure 9-4. Data Acquisition (DAQ) Circuit for ≤100kHz Input Signal Bandwidth

9.2.2.1 Design Requirements

Table 9-2 lists the parameters for this typical application.

Table 9-2. Design Parameters

PARAMETER	VALUE
SNR	≥ 91dB
THD	≤ –110dB
Input signal frequency	≤ 100kHz

Copyright © 2025 Texas Instruments Incorporated

9.2.2.2 Application Curves

The following figures show the FFT plots for the circuit in Figure 9-4.

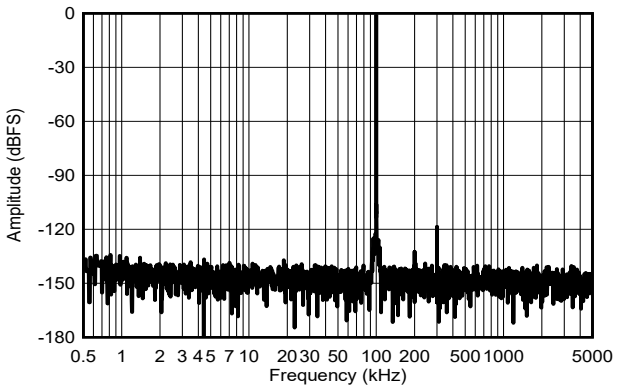

f_{IN} = 100kHz, SNR = 92dB, THD = –117dB

Figure 9-5. Typical FFT at 10MSPS/Channel: ADS9228

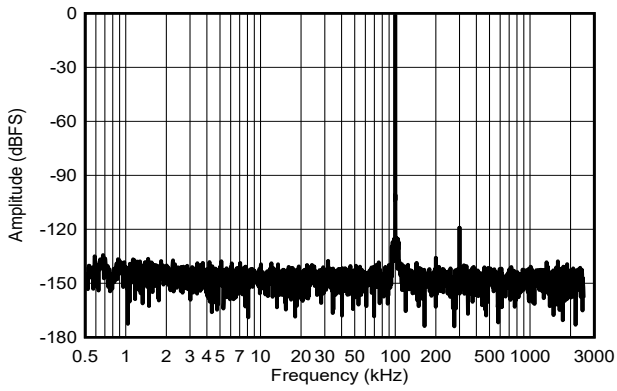

f_{IN} = 100kHz, SNR = 92dB, THD = –117dB

Figure 9-6. Typical FFT at 5MSPS/Channel: ADS9227

9.2.3 Data Acquisition (DAQ) Circuit for ≤1MHz Input Signal Bandwidth

Figure 9-7 shows a 2-channel solution with minimum external components. This signal-chain significantly reduces signal-chain size by driving the ADS9229 with the THS4541, which enables low-distortion performance with low power over wide signal bandwidth.

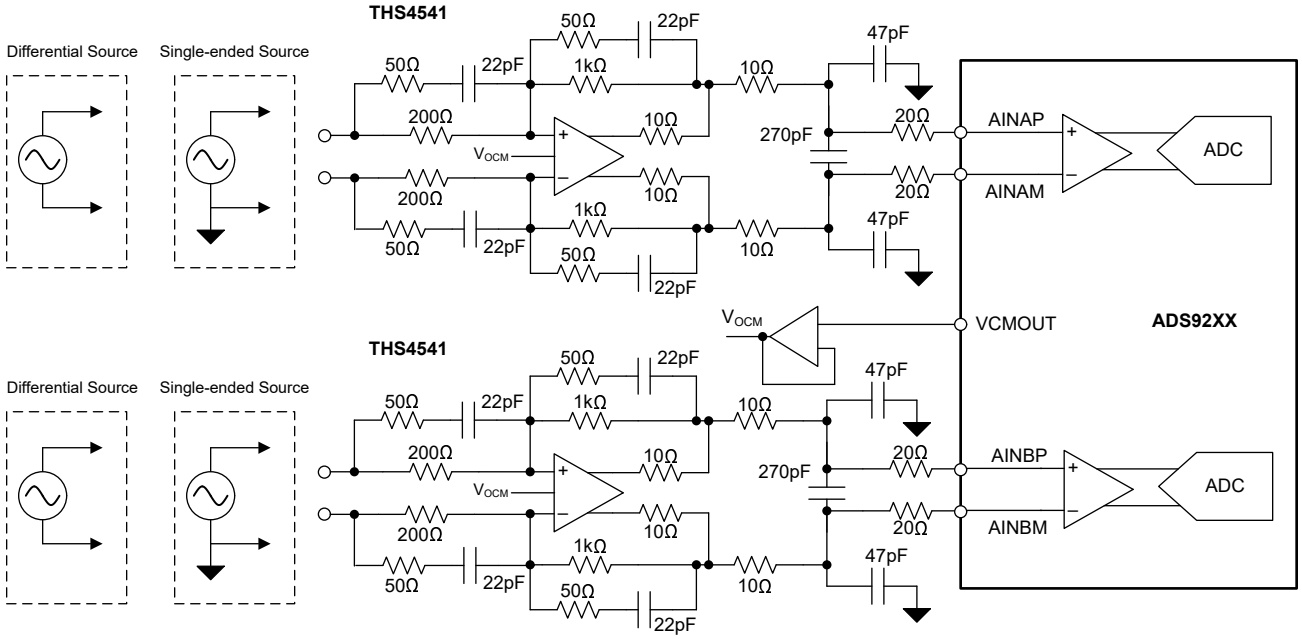

Figure 9-7. Data Acquisition (DAQ) Circuit for ≤1MHz Input Signal Bandwidth

Copyright © 2025 Texas Instruments Incorporated

9.2.3.1 Design Requirements

Table 9-3 lists the parameters for this typical application.

Table 9-3. Design Parameters

PARAMETER	VALUE
SNR	≥ 80dB
THD	≤ –100dB
Input signal frequency	≤ 1MHz

9.2.3.2 Application Curves

The following figures show the FFT plots for the circuit in Figure 9-7.

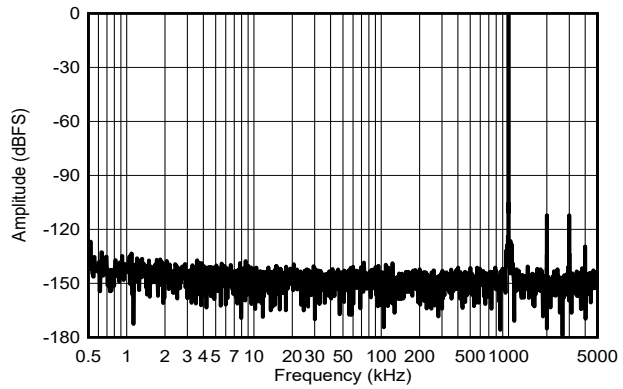

f_{IN} = 1MHz, SNR = 93.3dB, THD = –104dB

Figure 9-8. Typical FFT at 10MSPS/Channel: ADS9228

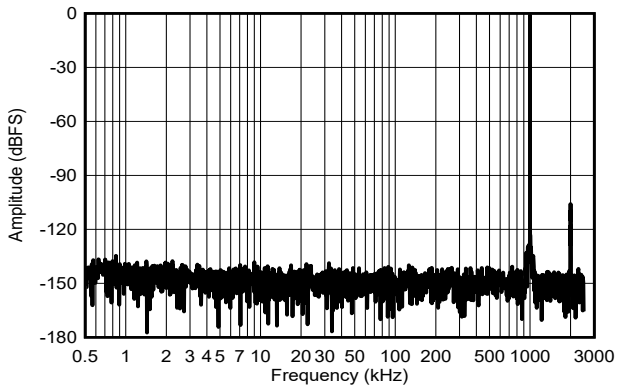

f_{IN} = 1MHz, SNR = 90.5dB, THD = –104.2dB

Figure 9-9. Typical FFT at 5MSPS/Channel: ADS9227

Copyright © 2025 Texas Instruments Incorporated

9.3 Power Supply Recommendations

The ADS922x has three independent power supplies, AVDD_5V and VDD_1V8. The AVDD_5V supply provides power to the ADC driver. The VDD_1V8 provides power to the analog circuits and the digital interface. Set the AVDD_5 and VDD_1V8 supplies independently to voltages within the permissible range. Figure 9-10 shows how to decouple the power supplies.

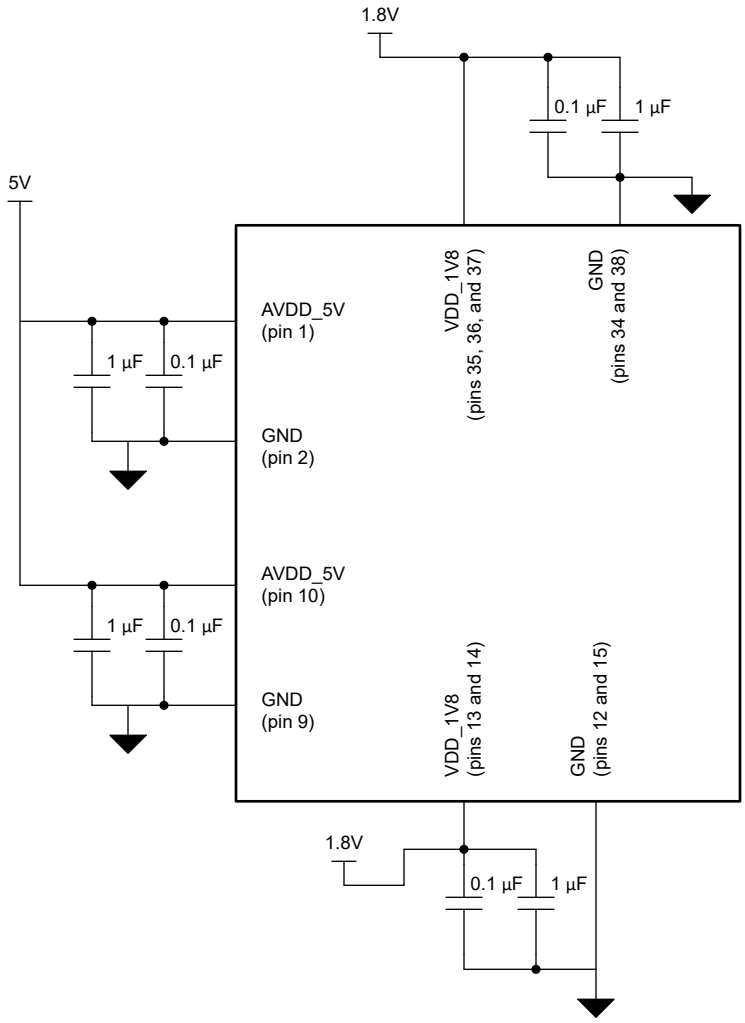

Figure 9-10. Power-Supply Decoupling

Copyright © 2025 Texas Instruments Incorporated

9.4 Layout

9.4.1 Layout Guidelines

Figure 9-11 shows a board layout example for the ADS922x. Avoid crossing digital lines with the analog signal path and keep the analog input signals and the reference signals away from noise sources. Use 0.1µF ceramic bypass capacitors in close proximity to the analog (AVDD_5V and VDD_1V8), and digital (VDD_1V8) power-supply pins. Avoid placing vias between the power-supply pins and the bypass capacitors. Place the reference decoupling capacitor close to the device REFIO and REFM pins. Avoid placing vias between the REFIO pin and the bypass capacitors. Connect the GND and REFM pins to a ground plane using short, low-impedance paths.

9.4.2 Layout Example

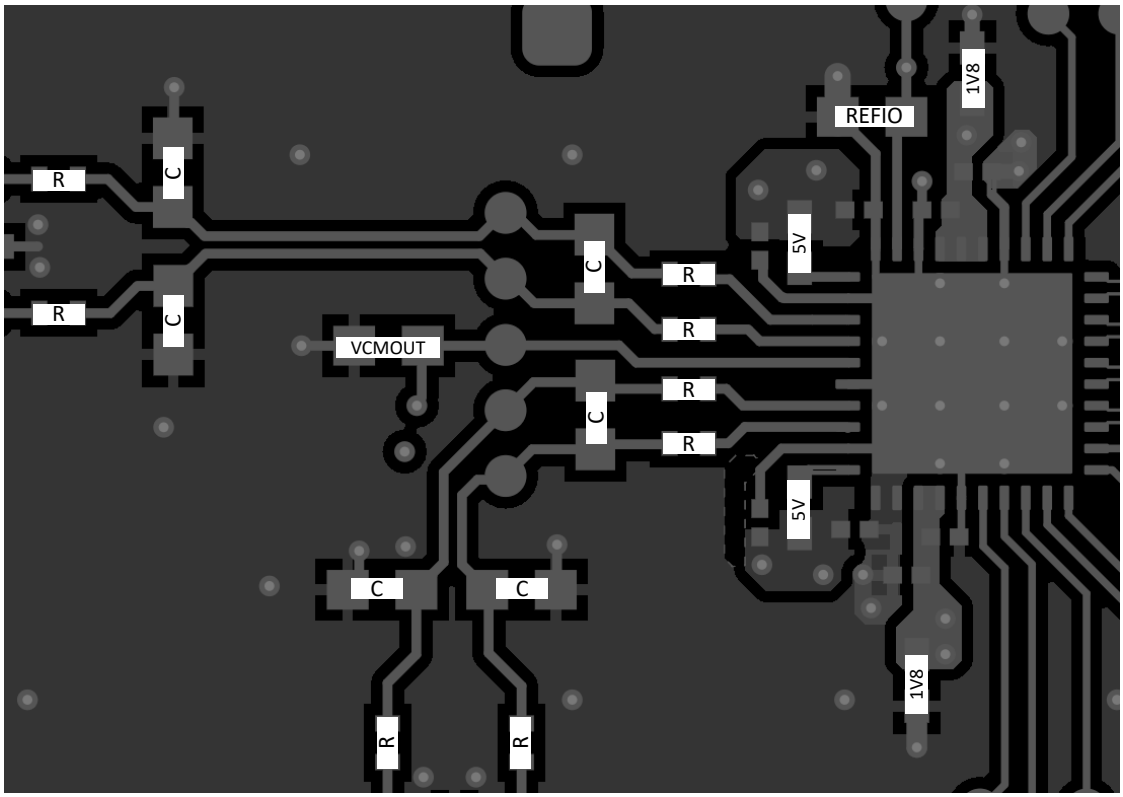

Figure 9-11. Example Layout

10 Device and Documentation Support

TI offers an extensive line of development tools. Tools and software to evaluate the performance of the device, generate code, and develop solutions are listed below.

10.1 Documentation Support

10.1.1 Related Documentation

For related documentation, see the following:

- Texas Instruments, *REF70 2 ppm/°C Maximum Drift, 0.23 ppm_{p-p} 1/f Noise, Precision Voltage Reference*, data sheet
- Texas Instruments, *THS4552 Dual-Channel, Low-Noise, Precision, 150-MHz, Fully Differential Amplifier*, data sheet
- Texas Instruments, *THS4541 Negative Rail Input, Rail-to-Rail Output, Precision, 850-MHz Fully Differential Amplifier*, data sheet

10.2 Receiving Notification of Documentation Updates

To receive notification of documentation updates, navigate to the device product folder on ti.com. Click on *Notifications* to register and receive a weekly digest of any product information that has changed. For change details, review the revision history included in any revised document.

10.3 Support Resources

TI E2E™ support forums are an engineer's go-to source for fast, verified answers and design help — straight from the experts. Search existing answers or ask your own question to get the quick design help you need.

Linked content is provided "AS IS" by the respective contributors. They do not constitute TI specifications and do not necessarily reflect TI's views; see TI's Terms of Use.

10.4 Trademarks

TI E2E™ is a trademark of Texas Instruments.
All trademarks are the property of their respective owners.

10.5 Electrostatic Discharge Caution



This integrated circuit can be damaged by ESD. Texas Instruments recommends that all integrated circuits be handled with appropriate precautions. Failure to observe proper handling and installation procedures can cause damage.

ESD damage can range from subtle performance degradation to complete device failure. Precision integrated circuits may be more susceptible to damage because very small parametric changes could cause the device not to meet its published specifications.

10.6 Glossary

TI Glossary	This glossary lists and explains terms, acronyms, and definitions.

Copyright © 2025 Texas Instruments Incorporated

11 Revision History

NOTE: Page numbers for previous revisions may differ from page numbers in the current version.

Changes from Revision B (August 2024) to Revision C (March 2025)	Page
• Changed ADS9229 from *Advance Information* to *Production Data*, added ADS9228 to document	1
• Changed *Device Block Diagram* figure	1
• Added *Device Comparison Table*	3
• Added *Sampling Edge to Corresponding Data MSB Output Timing* diagram	12
• Changed *Typical Characteristics: All Devices* section	15
• Changed *Typical Characteristics: ADS9229* section	17
• Changed condition statement for *Typical Characteristics: ADS9228* and SNR value in *Typical FFT for f_{IN} = 1MHz* condition statement	18
• Changed condition statement of *Typical Characteristics: ADS9227* section and SNR value of *Typical FFT for f_{IN} = 1MHz* condition statement	19
• Changed power consumption value from *187mW/ch* to *230mW/ch* in *Overview* section	20
• Changed *Transfer Characteristics* table	21
• Changed *Data Averaging* section	23
• Added OSR_RD (0xC5[6:5]) register row to *Decimation Settings for the DDC* table	24
• Changed *Register Map Settings for Output Data Interface for the ADS9229 and ADS9228* table and changed *Data Interface* subsections	26
• Changed *Test Patterns for Data Interface* section	29
• Changed *IOVDD* to *VDD_1V8* and *Single-Ended Sampling Clock* figure in *ADC Sampling Clock Input*	30
• Changed *Reset* section	31
• Changed *Power-Down Options* section	31
• Changed *Initialization Sequence* section	31
• Changed 0Dh, 33h, C5h registers, added 10h, 34h registers, deleted F4h, F6h registers	39
• Changed description of bit setting 1 for XOR_EN (bit 3) in register 12 of register bank 1	39
• Changed *Register Bank 2*	54
• Changed *Application Curves* section in *Data Acquisition (DAQ) Circuit for ≤20kHz Input Signal Bandwidth* application	56
• Changed *Typical FFT at 10MSPS/Channel: ADS9228* figure in *Application Curves* section	58
• Changed SNR value from90.6dB to 93.3dB in *Typical FFT at 10MSPS/Channel: ADS9228* condition statement	59
• Changed *Power Supply Recommendations* section	60
• Changed *Example Layout* figure	61

Changes from Revision A (June 2024) to Revision B (August 2024)	Page
• Changed ADS9229 from *Preview* to *Advance Information*	1

12 Mechanical, Packaging, and Orderable Information

The following pages include mechanical, packaging, and orderable information. This information is the most current data available for the designated devices. This data is subject to change without notice and revision of this document. For browser-based versions of this data sheet, refer to the left-hand navigation.

Copyright © 2025 Texas Instruments Incorporated

PACKAGING INFORMATION

Orderable part number	Status (1)	Material type (2)	Package | Pins	Package qty | Carrier	RoHS (3)	Lead finish/ Ball material (4)	MSL rating/ Peak reflow (5)	Op temp (°C)	Part marking (6)
ADS9227RHAR	Active	Production	VQFN (RHA) | 40	2500 | LARGE T&R	Yes	NIPDAU	Level-3-260C-168 HR	-40 to 125	ADS9227
ADS9227RHAR.A	Active	Production	VQFN (RHA) | 40	2500 | LARGE T&R	Yes	NIPDAU	Level-3-260C-168 HR	-40 to 125	ADS9227
ADS9228RHAR	Active	Production	VQFN (RHA) | 40	4000 | LARGE T&R	Yes	NIPDAU	Level-3-260C-168 HR	-40 to 125	ADS9228
ADS9228RHAR.A	Active	Production	VQFN (RHA) | 40	4000 | LARGE T&R	Yes	NIPDAU	Level-3-260C-168 HR	See ADS9228RHAR	ADS9228
ADS9229RHAR	Active	Production	VQFN (RHA) | 40	4000 | LARGE T&R	Yes	NIPDAU	Level-3-260C-168 HR	-40 to 125	ADS9229
ADS9229RHAR.A	Active	Production	VQFN (RHA) | 40	4000 | LARGE T&R	Yes	NIPDAU	Level-3-260C-168 HR	See ADS9229RHAR	ADS9229

(1) **Status:** For more details on status, see our product life cycle.

(2) **Material type:** When designated, preproduction parts are prototypes/experimental devices, and are not yet approved or released for full production. Testing and final process, including without limitation quality assurance, reliability performance testing, and/or process qualification, may not yet be complete, and this item is subject to further changes or possible discontinuation. If available for ordering, purchases will be subject to an additional waiver at checkout, and are intended for early internal evaluation purposes only. These items are sold without warranties of any kind.

(3) **RoHS values:** Yes, No, RoHS Exempt. See the TI RoHS Statement for additional information and value definition.

(4) **Lead finish/Ball material:** Parts may have multiple material finish options. Finish options are separated by a vertical ruled line. Lead finish/Ball material values may wrap to two lines if the finish value exceeds the maximum column width.

(5) **MSL rating/Peak reflow:** The moisture sensitivity level ratings and peak solder (reflow) temperatures. In the event that a part has multiple moisture sensitivity ratings, only the lowest level per JEDEC standards is shown. Refer to the shipping label for the actual reflow temperature that will be used to mount the part to the printed circuit board.

(6) **Part marking:** There may be an additional marking, which relates to the logo, the lot trace code information, or the environmental category of the part.

Multiple part markings will be inside parentheses. Only one part marking contained in parentheses and separated by a "~" will appear on a part. If a line is indented then it is a continuation of the previous line and the two combined represent the entire part marking for that device.

Important Information and Disclaimer: The information provided on this page represents TI's knowledge and belief as of the date that it is provided. TI bases its knowledge and belief on information provided by third parties, and makes no representation or warranty as to the accuracy of such information. Efforts are underway to better integrate information from third parties. TI has taken and continues to take reasonable steps to provide representative and accurate information but may not have conducted destructive testing or chemical analysis on incoming materials and chemicals. TI and TI suppliers consider certain information to be proprietary, and thus CAS numbers and other limited information may not be available for release.

In no event shall TI's liability arising out of such information exceed the total purchase price of the TI part(s) at issue in this document sold by TI to Customer on an annual basis.

TAPE AND REEL INFORMATION

REEL DIMENSIONS

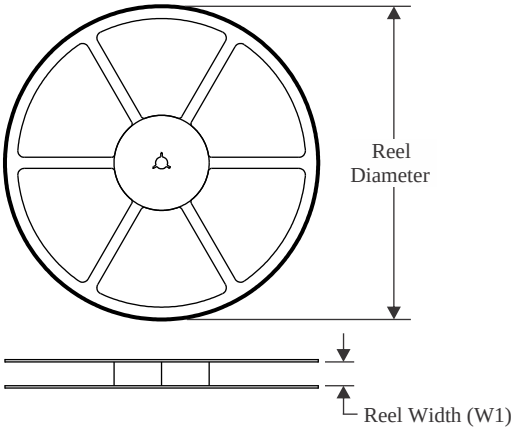

TAPE DIMENSIONS

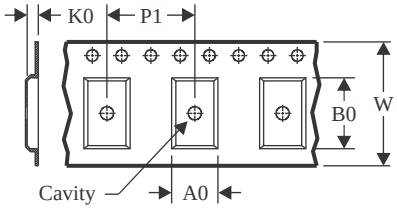

A0	Dimension designed to accommodate the component width
B0	Dimension designed to accommodate the component length
K0	Dimension designed to accommodate the component thickness
W	Overall width of the carrier tape
P1	Pitch between successive cavity centers

QUADRANT ASSIGNMENTS FOR PIN 1 ORIENTATION IN TAPE

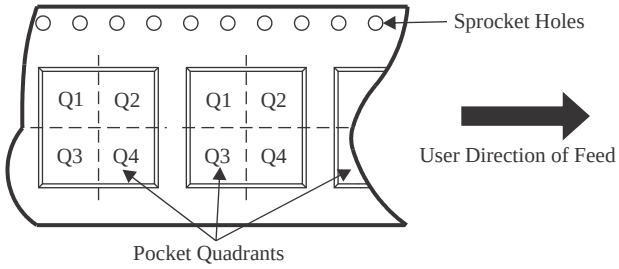

*All dimensions are nominal

Device	Package Type	Package Drawing	Pins	SPQ	Reel Diameter (mm)	Reel Width W1 (mm)	A0 (mm)	B0 (mm)	K0 (mm)	P1 (mm)	W (mm)	Pin1 Quadrant
ADS9227RHAR	VQFN	RHA	40	2500	330.0	16.4	6.3	6.3	1.1	12.0	16.0	Q2
ADS9228RHAR	VQFN	RHA	40	4000	330.0	16.4	6.3	6.3	1.1	12.0	16.0	Q2
ADS9229RHAR	VQFN	RHA	40	4000	330.0	16.4	6.3	6.3	1.1	12.0	16.0	Q2

TAPE AND REEL BOX DIMENSIONS

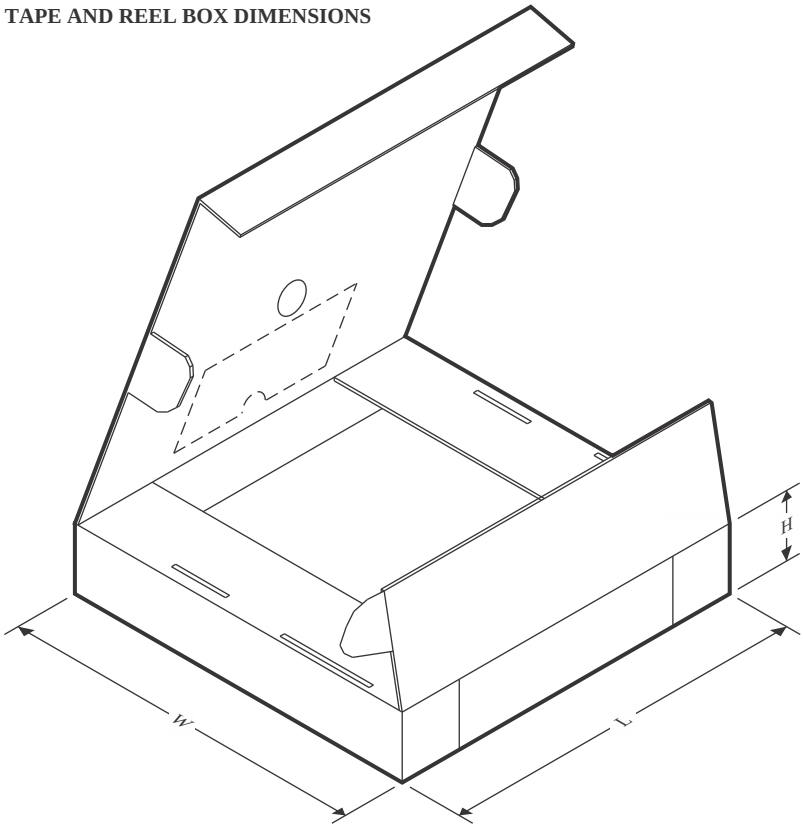

*All dimensions are nominal

Device	Package Type	Package Drawing	Pins	SPQ	Length (mm)	Width (mm)	Height (mm)
ADS9227RHAR	VQFN	RHA	40	2500	360.0	360.0	36.0
ADS9228RHAR	VQFN	RHA	40	4000	360.0	360.0	36.0
ADS9229RHAR	VQFN	RHA	40	4000	360.0	360.0	36.0

GENERIC PACKAGE VIEW

RHA 40

VQFN - 1 mm max height

6 x 6, 0.5 mm pitch

PLASTIC QUAD FLATPACK - NO LEAD

This image is a representation of the package family, actual package may vary.
Refer to the product data sheet for package details.

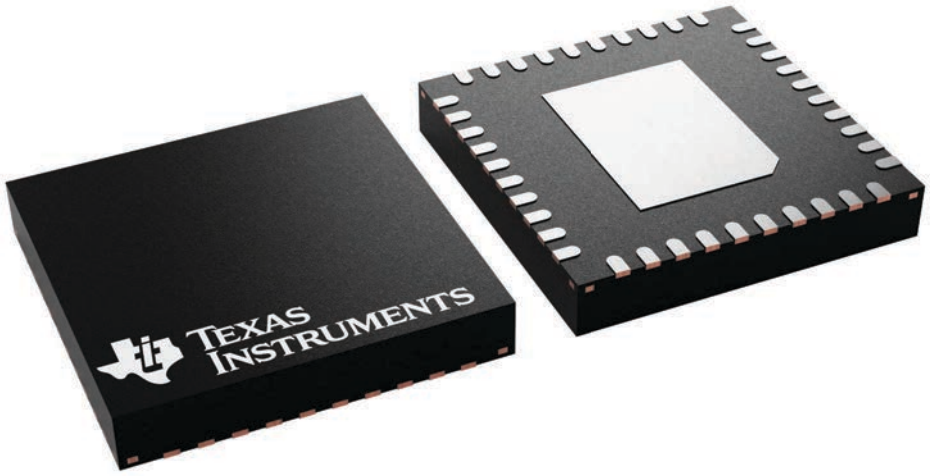

4225870/A

PACKAGE OUTLINE

RHA0040H

VQFN - 1 mm max height

PLASTIC QUAD FLATPACK - NO LEAD

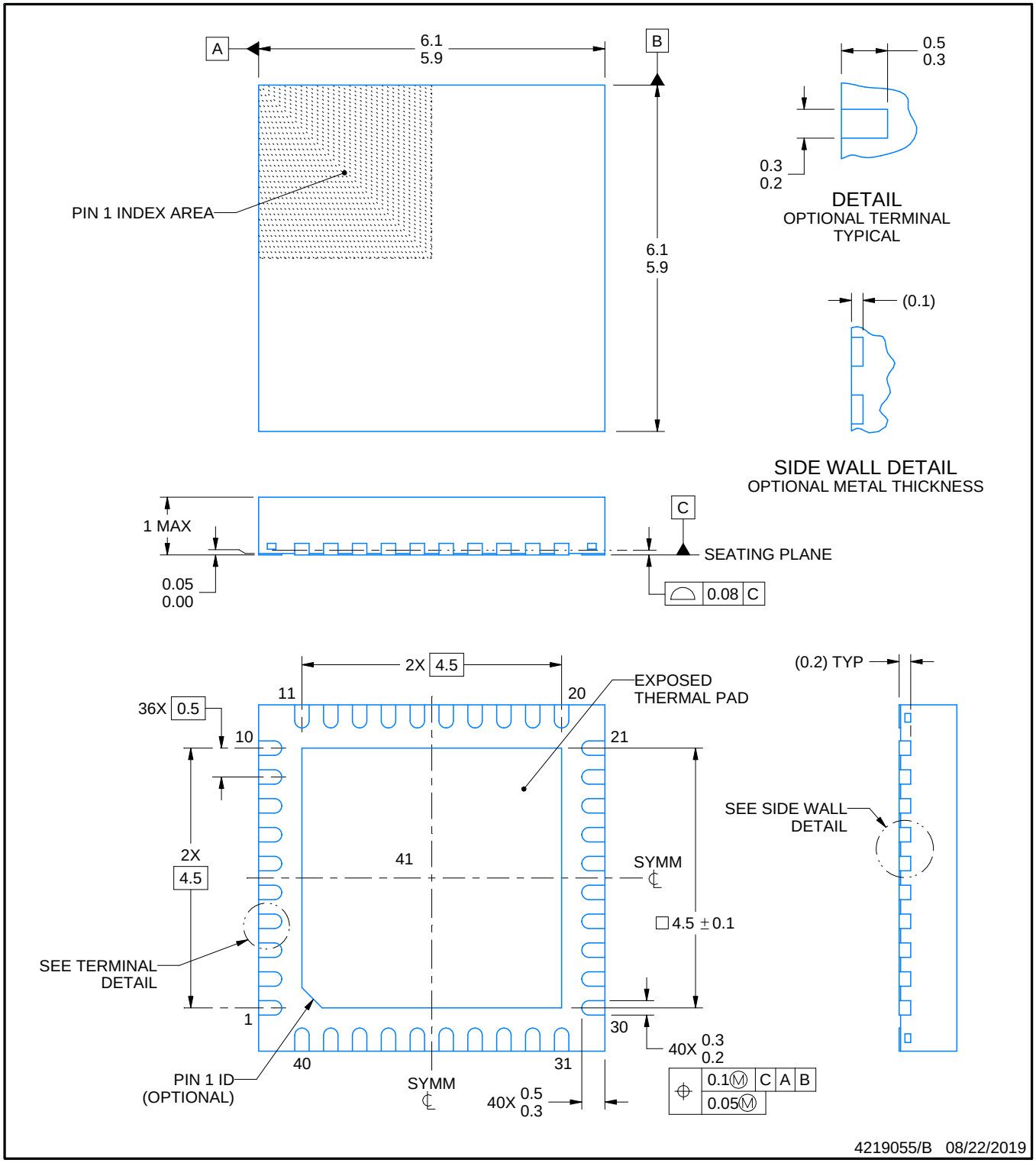

NOTES:

1. All linear dimensions are in millimeters. Any dimensions in parenthesis are for reference only. Dimensioning and tolerancing per ASME Y14.5M.
2. This drawing is subject to change without notice.
3. The package thermal pad must be soldered to the printed circuit board for thermal and mechanical performance.

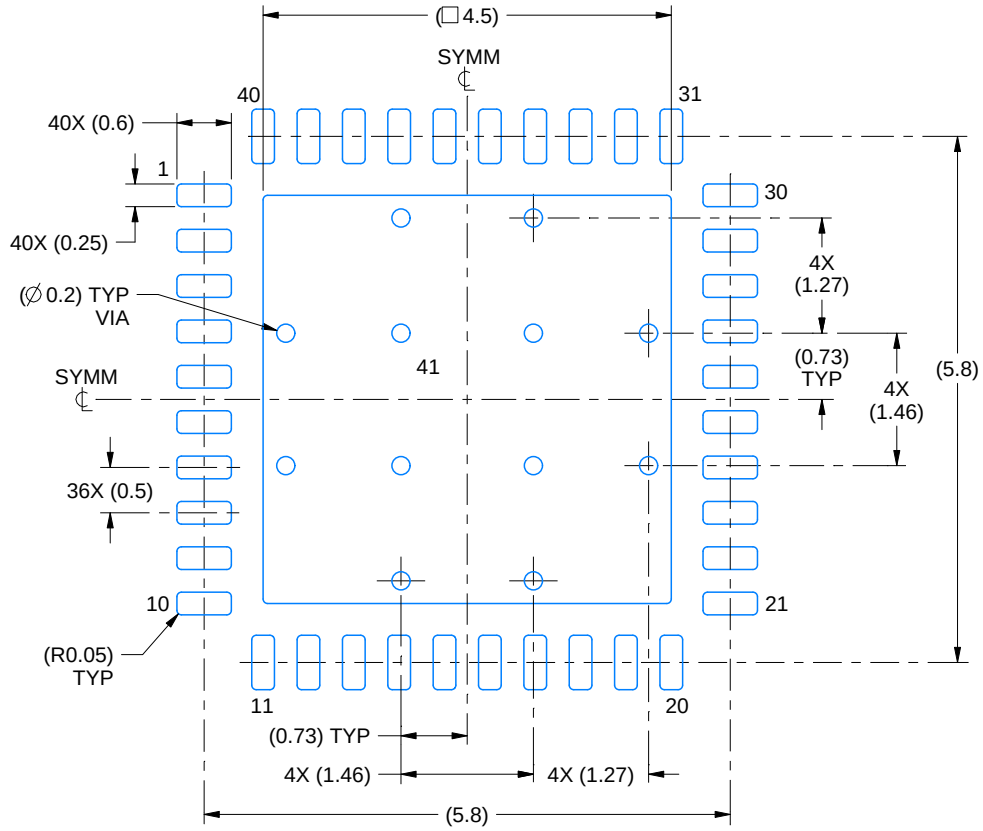

LAND PATTERN EXAMPLE
EXPOSED METAL SHOWN
SCALE:12X

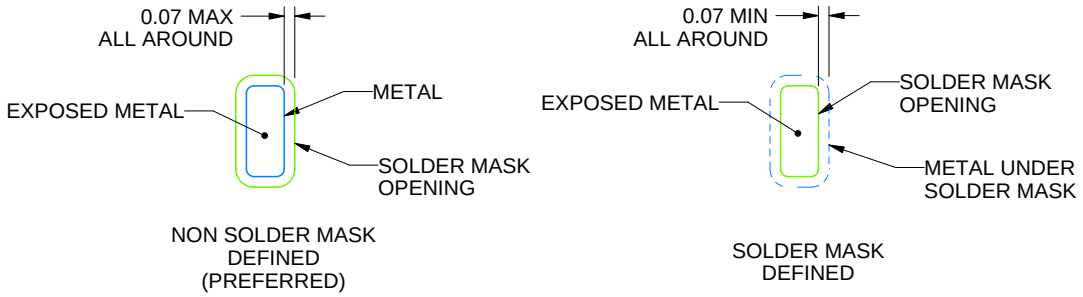

SOLDER MASK DETAILS

4219055/B 08/22/2019

NOTES: (continued)

4. This package is designed to be soldered to a thermal pad on the board. For more information, see Texas Instruments literature number SLUA271 (www.ti.com/lit/slua271).
5. Vias are optional depending on application, refer to device data sheet. If any vias are implemented, refer to their locations shown on this view. It is recommended that vias under paste be filled, plugged or tented.

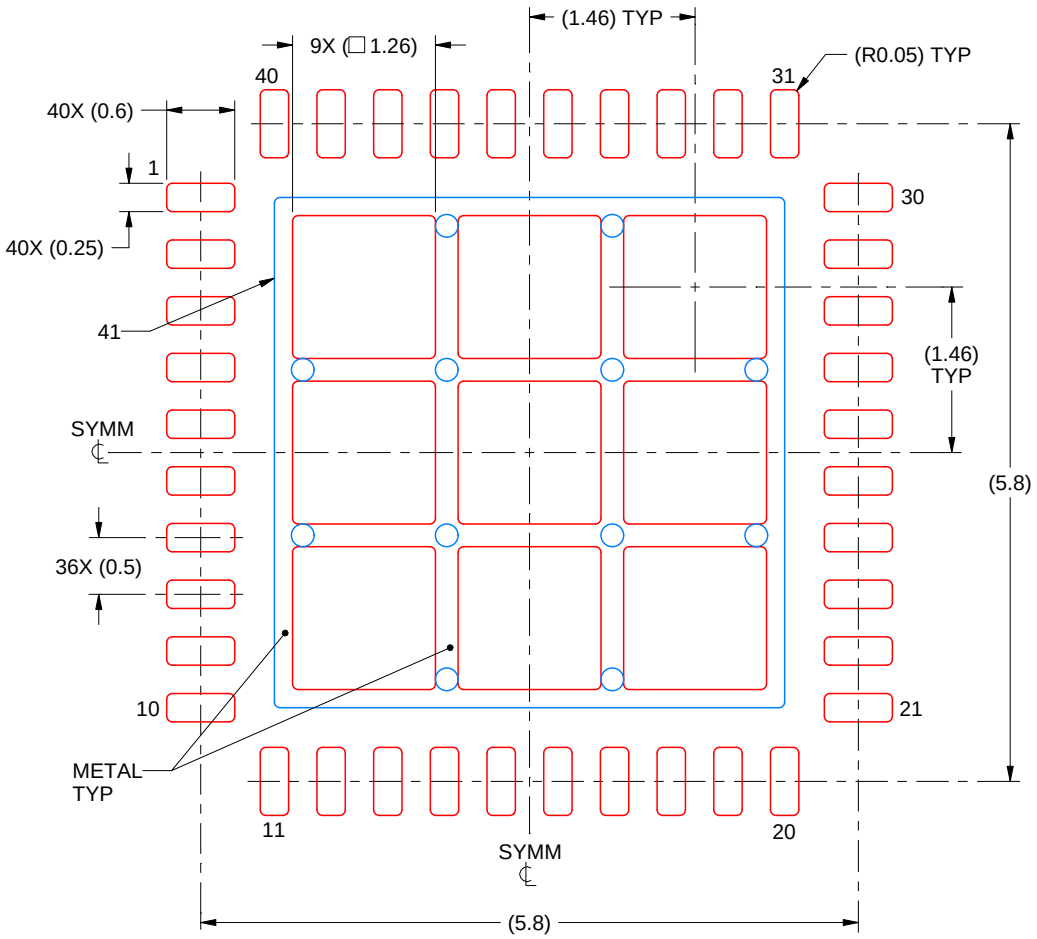

SOLDER PASTE EXAMPLE
BASED ON 0.125 mm THICK STENCIL

EXPOSED PAD 41:
70% PRINTED SOLDER COVERAGE BY AREA
SCALE:15X

4219055/B 08/22/2019

NOTES: (continued)

6. Laser cutting apertures with trapezoidal walls and rounded corners may offer better paste release. IPC-7525 may have alternate design recommendations.

IMPORTANT NOTICE AND DISCLAIMER

TI PROVIDES TECHNICAL AND RELIABILITY DATA (INCLUDING DATASHEETS), DESIGN RESOURCES (INCLUDING REFERENCE DESIGNS), APPLICATION OR OTHER DESIGN ADVICE, WEB TOOLS, SAFETY INFORMATION, AND OTHER RESOURCES “AS IS” AND WITH ALL FAULTS, AND DISCLAIMS ALL WARRANTIES, EXPRESS AND IMPLIED, INCLUDING WITHOUT LIMITATION ANY IMPLIED WARRANTIES OF MERCHANTABILITY, FITNESS FOR A PARTICULAR PURPOSE OR NON-INFRINGEMENT OF THIRD PARTY INTELLECTUAL PROPERTY RIGHTS.

These resources are intended for skilled developers designing with TI products. You are solely responsible for (1) selecting the appropriate TI products for your application, (2) designing, validating and testing your application, and (3) ensuring your application meets applicable standards, and any other safety, security, regulatory or other requirements.

These resources are subject to change without notice. TI grants you permission to use these resources only for development of an application that uses the TI products described in the resource. Other reproduction and display of these resources is prohibited. No license is granted to any other TI intellectual property right or to any third party intellectual property right. TI disclaims responsibility for, and you fully indemnify TI and its representatives against any claims, damages, costs, losses, and liabilities arising out of your use of these resources.

TI’s products are provided subject to TI’s Terms of Sale, TI’s General Quality Guidelines, or other applicable terms available either on ti.com or provided in conjunction with such TI products. TI’s provision of these resources does not expand or otherwise alter TI’s applicable warranties or warranty disclaimers for TI products. Unless TI explicitly designates a product as custom or customer-specified, TI products are standard, catalog, general purpose devices.

TI objects to and rejects any additional or different terms you may propose.

Copyright © 2026, Texas Instruments Incorporated

Last updated 10/2025