An Optimized System-on-Chip Solution for 2.4-GHz IEEE 802.15.4 Remote Control Applications

Check for Samples: CC2533

FEATURES

- **RF/Layout**
  - **2.4-GHz IEEE 802.15.4 Compliant RF Transceiver**
  - **Excellent Receiver Sensitivity and Robustness to Interference**
  - **Programmable Output Power Up to 4.5 dBm**
  - **Boost-Mode TX at 7 dBm**
  - **Very Few External Components**
  - **Only a Single Crystal Needed for Asynchronous Networks**
  - **Space-Saving 6-mm × 6-mm QFN40 Package**
  - **Suitable for Systems Targeting Compliance With Worldwide Radio-Frequency Regulations: ETSI EN 300 328 and EN 300 440 (Europe), FCC CFR47 Part 15 (US), and ARIB STD-T-66 (Japan)**
  - **Pin- and Software-Compatible With the CC2530Fxxx Series**
- **Low Power**
  - **Active-Mode RX (CPU Idle): 25 mA**
  - **Active Mode TX at 0 dBm (CPU Idle): 28.5 mA**
  - **Power Mode 1 (4 μs Wake-Up): 0.2 mA**
  - **Power Mode 2 (Sleep Timer Running): 1 μA**
  - **Power Mode 3 (External Interrupts): 0.5 μA**
  - **Wide Supply-Voltage Range (2 V–3.6 V)**
- **Microcontroller**
  - **High-Performance and Low-Power 8051 Microcontroller Core With Code Prefetch**
  - **64- or 96-KB In-System-Programmable Flash**
  - **4- or 6-KB RAM With Retention in All Power Modes**
  - **Hardware Debug Support**
- **Peripherals**
  - **Powerful Five-Channel DMA**
  - **IEEE 802.15.4 MAC Timer, General-Purpose Timers (One 16-Bit, Two 8-Bit)**
  - **IR Generation Circuitry**
  - **32-kHz Sleep Timer With Capture**
  - **CSMA/CA Hardware Support**
  - **Accurate Digital RSSI/LQI Support**
  - **Battery Monitor Comparator**
  - **Random Number Generation**
  - **AES Security Coprocessor**
  - **Two Powerful USARTs With Support for UART and SPI**
  - **I^2C Interface**
  - **23 General-Purpose I/O Pins**
  - **Watchdog Timer**
- **Development Tools**
  - **CC2533 Remote Control Development Kit for RF4CE**
  - **CC2533 Development Kit**
  - **CC2533EMK Evaluation Modules**
  - **SmartRF™ Software**
  - **Packet Sniffer**
  - **IAR Embedded Workbench™ Available**

APPLICATIONS

- **ZigBee™ RF4CE Remote Control Target and Device**
- **2.4-GHz IEEE 802.15.4 Systems Based on TIMAC or SimpliciTI™ Network Protocol**
- **Consumer Electronics**
- **Electronic Shelf Labeling**

Please be aware that an important notice concerning availability, standard warranty, and use in critical applications of Texas Instruments semiconductor products and disclaimers thereto appears at the end of this data sheet.

SmartRF, SimpliciTI, RemoTI are trademarks of Texas Instruments.
IAR Embedded Workbench is a trademark of IAR Systems AB.
ZigBee is a trademark of ZigBee Alliance.

PRODUCTION DATA information is current as of publication date. Products conform to specifications per the terms of the Texas Instruments standard warranty. Production processing does not necessarily include testing of all parameters.

Copyright © 2010, Texas Instruments Incorporated

DESCRIPTION

The CC2533 is an optimized system-on-chip (SoC) solution for IEEE 802.15.4 based remote-control systems. It enables single-chip remote controls to be built with low bill-of-material cost when used as a flexible SoC. It also provides a simple path to adding RF4CE capability to a device or target when used in the wireless network processor configuration of the RemoTI™ RF4CE stack. Robust network nodes can be built with very low total bill-of-material costs.

The CC2533 combines the excellent performance of a leading RF transceiver with a single-cycle 8051 compliant CPU, up to 96-KB in-system programmable flash memory, up to 6-KB RAM, and many other powerful features. The CC2533 has efficient power modes with RAM and register retention below 1 µA, making it highly suited for low-duty-cycle systems where ultralow power consumption is required. Short transition times between operating modes further ensure low energy consumption.

Combined with the golden-unit-status RemoTI stack from Texas Instruments, the CC2533 provides a robust and complete ZigBee RF4CE remote-control solution. It is also ideal for implementing the target side of a remote-control system in a network processor configuration with an SPI/UART/I^2C interface. The CC2533 comes complete with reference designs and example software that implement a remote control system to ensure efficient design-in.

The CC2533 exists in three memory-size configurations:

CC2533F32 – 32-KB Flash, 4-KB RAM

CC2533F64 – 64-KB Flash, 4-KB RAM

CC2533F96 – 96-KB Flash, 6-KB RAM

 Copyright © 2010, Texas Instruments Incorporated

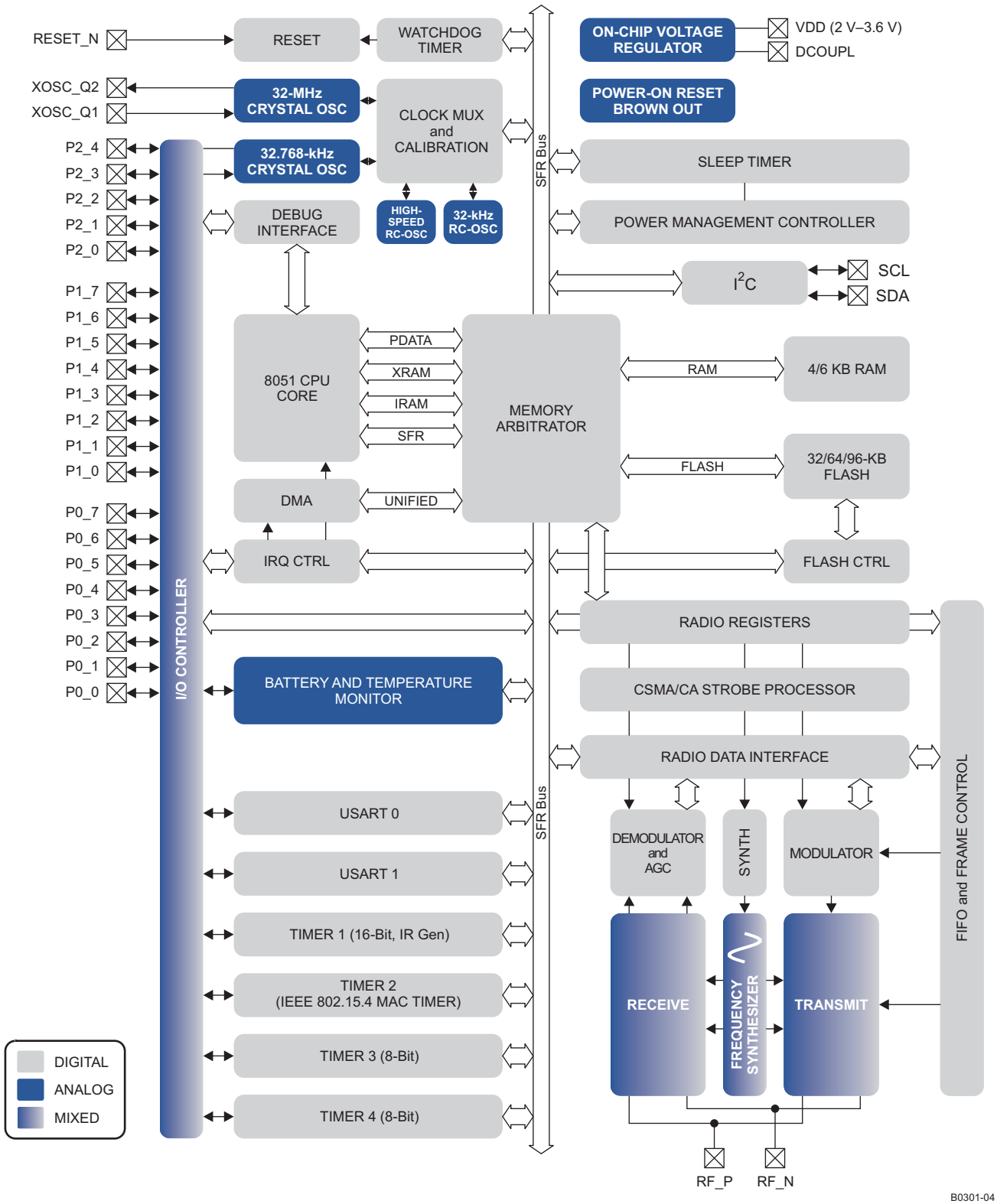

This integrated circuit can be damaged by ESD. Texas Instruments recommends that all integrated circuits be handled with appropriate precautions. Failure to observe proper handling and installation procedures can cause damage.

ESD damage can range from subtle performance degradation to complete device failure. Precision integrated circuits may be more susceptible to damage because very small parametric changes could cause the device not to meet its published specifications.

Copyright © 2010, Texas Instruments Incorporated

ABSOLUTE MAXIMUM RATINGS[1]

		MIN	MAX	UNIT
Supply voltage	All supply pins must have the same voltage	–0.3	3.9	V
Voltage on any digital pin		–0.3	VDD + 0.3, ≤ 3.9	V
Input RF level			10	dBm
Storage temperature range		–40	125	°C
ESD[2]	All pads, according to human-body model, JEDEC STD 22, method A114		2	kV
	According to charged-device model, JEDEC STD 22, method C101		500	V
	All pads excluding RF pads, according to machine model, JEDEC STD 22, method A115		200	V

(1) Stresses beyond those listed under *Absolute Maximum Ratings* may cause permanent damage to the device. These are stress ratings only, and functional operation of the device at these or any other conditions beyond those indicated under *Recommended Operating Conditions* is not implied. Exposure to absolute-maximum-rated conditions for extended periods may affect device reliability.
(2) CAUTION: ESD-sensitive device. Precautions should be used when handling the device in order to prevent permanent damage.

RECOMMENDED OPERATING CONDITIONS

	MIN	MAX	UNIT
Operating ambient temperature range, T_A	–40	125	°C
Operating supply voltage	2	3.6	V

ELECTRICAL CHARACTERISTICS

Measured on Texas Instruments CC2533 EM reference design with T_A = 25°C and VDD = 3 V, unless otherwise noted. **Boldface** limits apply over the entire operating range, T_A = –40°C to 125°C, VDD = 2 V to 3.6 V, and f_c = 2394 MHz to 2507 MHz.

PARAMETER		TEST CONDITIONS	MIN	TYP	MAX	UNIT
I_{core}	Core current consumption	Digital regulator on. 16-MHz RCOSC running. No radio, crystals, or peripherals active. Medium CPU activity: normal flash access[1], no RAM access		3.6		mA
		32-MHz XOSC running. No radio or peripherals active. Medium CPU activity: normal flash access[1], no RAM access		6.6	**7.7**	mA
		32-MHz XOSC running, radio in RX mode, –50-dBm input power, no peripherals active, CPU idle		21.6		mA
		32-MHz XOSC running, radio in RX mode at –100-dBm input power (waiting for signal), no peripherals active, CPU idle		25.1	**29.8**	mA
		32-MHz XOSC running, radio in TX mode, 0-dBm output power, no peripherals active, CPU idle		28.5		mA
		32-MHz XOSC running, radio in TX mode, 4.5-dBm output power, no peripherals active, CPU idle		32.3	**40.6**	mA
		32-MHz XOSC running, radio in boost mode TX, 7-dBm output power, no peripherals active, CPU idle		38.8		mA
		Power mode 1. Digital regulator on; 16-MHz RCOSC and 32-MHz crystal oscillator off; 32.768-kHz XOSC, POR, BOD, and sleep timer active; RAM and register retention		0.2	0.3	mA
		Power mode 2. Digital regulator off; 16-MHz RCOSC and 32-MHz crystal oscillator off; 32.768-kHz XOSC, POR, and sleep timer active; RAM and register retention		1	1.5	μA
		Power mode 3. Digital regulator off; no clocks; POR active; RAM and register retention		0.4	0.7	μA
		During reset with supply voltage of 1.2 V		54		μA

(1) Normal flash access means that the code used exceeds the cache storage, so cache misses happen frequently.

Copyright © 2010, Texas Instruments Incorporated

ELECTRICAL CHARACTERISTICS (continued)

Measured on Texas Instruments CC2533 EM reference design with T_A = 25°C and VDD = 3 V, unless otherwise noted. **Boldface** limits apply over the entire operating range, T_A = –40°C to 125°C, VDD = 2 V to 3.6 V, and f_c = 2394 MHz to 2507 MHz.

PARAMETER		TEST CONDITIONS	MIN	TYP	MAX	UNIT
I_{peri}	**Peripheral Current Consumption** (Adds to core current I_{core} for each peripheral unit activated)					
	Timer 1	Timer running, 32-MHz XOSC used		90		µA
	Timer 2	Timer running, 32-MHz XOSC used		90		µA
	Timer 3	Timer running, 32-MHz XOSC used		60		µA
	Timer 4	Timer running, 32-MHz XOSC used		70		µA
	Sleep timer	Including 32.753-kHz RCOSC		0.6		µA
	Battery monitor	When comparing		93		µA
	Flash	Erase		0.2		mA
		Burst-write peak current		6		mA

GENERAL CHARACTERISTICS

Measured on Texas Instruments CC2533 EM reference design with T_A = 25°C and VDD = 3 V, unless otherwise noted.

PARAMETER	TEST CONDITIONS	MIN	TYP	MAX	UNIT
WAKE-UP AND TIMING					
Power mode 1 → active	Digital regulator on, 16-MHz RCOSC and 32-MHz crystal oscillator off. Start-up of 16-MHz RCOSC		4		µs
Power mode 2 or 3 → active	Digital regulator off, 16-MHz RCOSC and 32-MHz crystal oscillator off. Start-up of regulator and 16-MHz RCOSC		0.1		ms
Active → TX or RX	Initially running on 16-MHz RCOSC, with 32-MHz XOSC OFF		0.6		ms
	With 32-MHz XOSC initially on			192	µs
RX/TX and TX/RX turnaround				192	µs
RADIO PART					
RF frequency range	Programmable in 1-MHz steps, 5 MHz between channels for compliance with [1]	2394		2507	MHz
Radio baud rate	As defined by [1]		250		kbps
Radio chip rate	As defined by [1]		2		MChip/s
Flash page size			1		KB
Flash erase cycles				20	K Cycles

Copyright © 2010, Texas Instruments Incorporated

RF RECEIVE SECTION

Measured on Texas Instruments CC2533 EM reference design with T_A = 25°C, VDD = 3 V, and f_c = 2440 MHz, unless otherwise noted.
Boldface limits apply over the entire operating range, T_A = –40°C to 125°C, VDD = 2 V to 3.6 V, and f_c = 2394 MHz to 2507 MHz.

PARAMETER	TEST CONDITIONS	MIN	TYP	MAX	UNIT
Receiver sensitivity	PER = 1%, as specified by [1] [1] requires –85 dBm		–97	–93 **–89**	dBm
Saturation (maximum input level)	PER = 1%, as specified by [1] [1] requires –20 dBm		10		dBm
Adjacent-channel rejection, 5-MHz channel spacing	Wanted signal –82 dBm, adjacent modulated channel at 5 MHz, PER = 1%, as specified by [1]. [1] requires 0 dB		49		dB
Adjacent-channel rejection, –5-MHz channel spacing	Wanted signal –82 dBm, adjacent modulated channel at –5 MHz, PER = 1%, as specified by [1]. [1] requires 0 dB		49		dB
Alternate-channel rejection, 10-MHz channel spacing	Wanted signal –82 dBm, adjacent modulated channel at 10 MHz, PER = 1%, as specified by [1] [1] requires 30 dB		57		dB
Alternate-channel rejection, –10-MHz channel spacing	Wanted signal –82 dBm, adjacent modulated channel at –10 MHz, PER = 1%, as specified by [1] [1] requires 30 dB		57		dB
Channel rejection ≥ 20 MHz ≤ –20 MHz	Wanted signal at –82 dBm. Undesired signal is an IEEE 802.15.4 modulated channel, stepped through all channels from 2405 to 2480 MHz. Signal level for PER = 1%.		57 57		dB
Co-channel rejection	Wanted signal at –82 dBm. Undesired signal is 802.15.4 modulated at the same frequency as the desired signal. Signal level for PER = 1%.		–2		dB
Blocking/desensitization –250 MHz from band edge –100 MHz from band edge –50 MHz from band edge 50 MHz from band edge 100 MHz from band edge 250 MHz from band edge	Measured according to ETSI EN 300 440-1 V1.6.1 (2010-04) blocking/desensitization. Wanted signal 3 dB above sensitivity limit, interferer at 10×, 20× and 50× bandwidth from receiver channel band edge. Limit > –45dBm for class-2 receiver.		 -37 -35 -40 -38 -33 -32		dBm
Spurious emission. Only largest spurious emission stated within each band. 30 MHz–1000 MHz 1 GHz–12.75 GHz	Conducted measurement with a 50-Ω single-ended load. Suitable for systems targeting compliance with EN 300 328, EN 300 440, FCC CFR47 Part 15, and ARIB STD-T-66.		 < –80 –57		dBm
Frequency error tolerance (1)	[1] requires minimum 80 ppm		±150		ppm
Symbol rate error tolerance (2)	[1] requires minimum 80 ppm		±1000		ppm

(1) Difference between center frequency of the received RF signal and local oscillator frequency.
(2) Difference between incoming symbol rate and the internally generated symbol rate

Copyright © 2010, Texas Instruments Incorporated

RF TRANSMIT SECTION

Measured on Texas Instruments CC2533 EM reference design with T_A = 25°C, VDD = 3 V and f_c = 2440 MHz, unless otherwise noted.
Boldface limits apply over the entire operating range, T_A = –40°C to 125°C, VDD = 2 V to 3.6 V, and f_c = 2394 MHz to 2507 MHz.

PARAMETER	TEST CONDITIONS	MIN	TYP	MAX	UNIT
Nominal output power	Delivered to a single-ended 50-Ω load through a balun using 4.5 dBm output-power setting [1] requires minimum –3 dBm	1 **–3**	4.5	7 **8**	dBm
Boost mode	Delivered to a single-ended 50-Ω load through a balun using boost mode TX settings		7		dBm
Programmable output-power range			27		dB
Spurious emissions	4.5 dBm output power setting(1)				dBm
	25 MHz–1000 MHz (outside restricted bands)(2)(2)		–60		
	25 MHz–2400 MHz (within FCC restricted bands) (2)		–60		
	25 MHz–1000 MHz (within ETSI restricted bands) (2)		–60		
	1800–1900 MHz (ETSI restricted band)(2)		–56		
	5150–5300 MHz (ETSI restricted band)(2)		–54		
	At 2 × f_c and 3 × f_c (FCC restricted band)(2)		–48		
	At 2 × f_c and 3 × f_c (ETSI EN 300-440 and EN 300-328)(3) (2)		–39		
	1 GHz–12.75 GHz (outside restricted bands)(2)		–60		
	At 2483.5 MHz and above (FCC restricted band)(2) f_c= 2480 MHz(4) (2)		–45		
Error vector magnitude (EVM)	Measured as defined by [1] using 4.5 dBm output-power setting [1] requires maximum 35%.		3%		
Optimum load impedance	Differential impedance as seen from the RF port (RF_P and RF_N) towards the antenna		69 + j29		Ω

(1) Texas Instruments CC2533 EM reference design is suitable for systems targeting compliance with EN 300 328, EN 300 440, FCC CFR47 Part 15, and ARIB STD-T-66.
(2) Measurement conducted according to stated regulations. Only largest spurious emission stated within each band.
(3) Margins for passing conducted requirements at the third harmonic can be improved by using a simple band-pass filter connected between matching network and RF connector (1.8 pF in parallel with 1.6 nH); this filter must be connected to a good RF ground.
(4) Margins for passing FCC requirements at 2483.5 MHz and above when transmitting at 2480 MHz can be improved by using a lower output-power setting or having less than 100% duty cycle.

Copyright © 2010, Texas Instruments Incorporated

32-MHz CRYSTAL OSCILLATOR

Measured on Texas Instruments CC2533 EM reference design with T_A = 25°C and VDD = 3 V, unless otherwise noted.

PARAMETER		TEST CONDITIONS	MIN	TYP	MAX	UNIT
	Crystal frequency			32		MHz
	Crystal frequency accuracy requirement[(1)]		–40		40	ppm
ESR	Equivalent series resistance		6		60	Ω
C_0	Crystal shunt capacitance		1		7	pF
C_L	Crystal load capacitance		10		16	pF
	Start-up time			0.3		ms
	Power-down guard time	The crystal oscillator must be in power down for a guard time before it is used again. This requirement is valid for all modes of operation. The need for power-down guard time can vary with crystal type and load.	3			ms

(1) Including aging and temperature dependency, as specified by [1]

32.768-kHz CRYSTAL OSCILLATOR

Measured on Texas Instruments CC2533 EM reference design with T_A = 25°C and VDD = 3 V, unless otherwise noted.

PARAMETER		TEST CONDITIONS	MIN	TYP	MAX	UNIT
	Crystal frequency			32.768		kHz
	Crystal frequency accuracy requirement[(1)]		–40		40	ppm
ESR	Equivalent series resistance			40	130	kΩ
C_0	Crystal shunt capacitance			0.9	2	pF
C_L	Crystal load capacitance			12	16	pF
	Start-up time			0.4		s

(1) Including aging and temperature dependency, as specified by [1]

32-kHz RC OSCILLATOR

Measured on Texas Instruments CC2533 EM reference design with T_A = 25°C and VDD = 3 V, unless otherwise noted.

PARAMETER	TEST CONDITIONS	MIN	TYP	MAX	UNIT
Calibrated frequency[(1)]			32.753		kHz
Frequency accuracy after calibration			±0.2%		
Temperature coefficient[(2)]			0.4		%/°C
Supply-voltage coefficient[(3)]			3		%/V
Calibration time[(4)]			2		ms

(1) The calibrated 32-kHz RC oscillator frequency is the 32-MHz XTAL frequency divided by 977.
(2) Frequency drift when temperature changes after calibration
(3) Frequency drift when supply voltage changes after calibration
(4) When the 32-kHz RC oscillator is enabled, it is calibrated when a switch from the 16-MHz RC oscillator to the 32-MHz crystal oscillator is performed while SLEEPCMD.OSC32K_CALDIS is 0.

Copyright © 2010, Texas Instruments Incorporated

16-MHz RC OSCILLATOR

Measured on Texas Instruments CC2533 EM reference design with T_A = 25°C and VDD = 3 V

PARAMETER	TEST CONDITIONS	MIN	TYP	MAX	UNIT
Frequency(1)			16		MHz
Uncalibrated frequency accuracy			±18%		
Calibrated frequency accuracy			±0.6%	±1%	
Start-up time				10	µs
Initial calibration time(2)			50		µs

(1) The calibrated 16-MHz RC oscillator frequency is the 32-MHz XTAL frequency divided by 2.
(2) When the 16-MHz RC oscillator is enabled, it is calibrated when a switch from the 16-MHz RC oscillator to the 32-MHz crystal oscillator is performed while SLEEPCMD.OSC_PD is set to 0.

RSSI/CCA CHARACTERISTICS

Measured on Texas Instruments CC2533 EM reference design with T_A = 25°C and VDD = 3 V

PARAMETER	TEST CONDITIONS	MIN	TYP	MAX	UNIT
RSSI range			100		dB
Absolute uncalibrated RSSI/CCA accuracy			±4		dB
RSSI/CCA offset			73		dB
Step size (LSB value)			1		dB

FREQEST CHARACTERISTICS

Measured on Texas Instruments CC2533 EM reference design with T_A = 25°C and VDD = 3 V

PARAMETER	TEST CONDITIONS	MIN	TYP	MAX	UNIT
FREQEST range			±250		kHz
FREQEST accuracy			±40		kHz
FREQEST offset			20		kHz
Step size (LSB value)			7.8		kHz

FREQUENCY SYNTHESIZER CHARACTERISTICS

Measured on Texas Instruments CC2533 EM reference design with T_A = 25°C, VDD = 3 V, and f_c = 2440 MHz

PARAMETER	TEST CONDITIONS	MIN	TYP	MAX	UNIT
Phase noise, unmodulated carrier	At ±1-MHz offset from carrier		–110		dBc/Hz
	At ±2-MHz offset from carrier		–117		
	At ±5-MHz offset from carrier		–122		

BATTERY MONITOR CHARACTERISTICS

Measured on Texas Instruments CC2533 EM reference design with T_A = 25°C and VDD = 3 V

PARAMETER	TEST CONDITIONS	MIN	TYP	MAX	UNIT
Settling time				2	µs
Step size	For voltages up to 2.5 V		24		mV
	For voltages above 2.5 V		169		mV
Calibrated accuracy	Across 1.95 V to 2.5 V, with single-point calibration at 1.95 V		2	20	mV
	Across 2.5 V to 3.6 V, with single-point calibration at 1.95 V		10	55	mV

CONTROL INPUT AC CHARACTERISTICS

T_A = –40°C to 125°C, VDD = 2 V to 3.6 V

PARAMETER	TEST CONDITIONS	MIN	TYP	MAX	UNIT
System clock, f_{SYSCLK} $t_{SYSCLK} = 1/f_{SYSCLK}$	The undivided system clock is 32 MHz when crystal oscillator is used. The undivided system clock is 16 MHz when calibrated 16-MHz RC oscillator is used.	16		32	MHz

Copyright © 2010, Texas Instruments Incorporated

CONTROL INPUT AC CHARACTERISTICS (continued)

T_A = –40°C to 125°C, VDD = 2 V to 3.6 V

PARAMETER	TEST CONDITIONS	MIN	TYP	MAX	UNIT
RESET_N low duration	See item 1, Figure 1. This is the shortest pulse that is recognized as a complete reset-pin request. Note that shorter pulses may be recognized but might not lead to complete reset of all modules within the chip.	1			µs
Interrupt pulse duration	See item 2, Figure 1.This is the shortest pulse that is recognized as an interrupt request.	20			ns

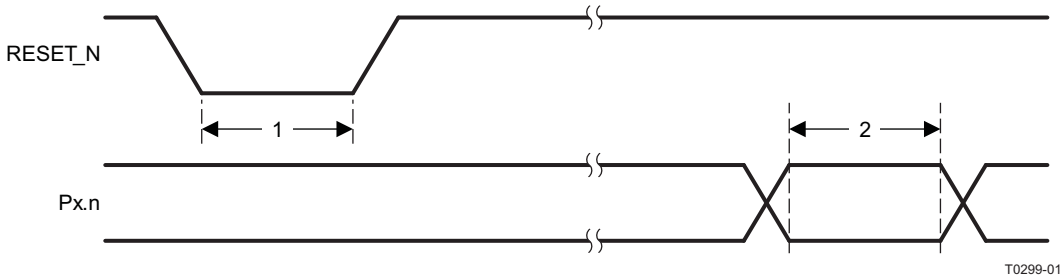

Figure 1. Control Input AC Characteristics

Copyright © 2010, Texas Instruments Incorporated

SPI AC CHARACTERISTICS

T_A = –40°C to 125°C, VDD = 2 V to 3.6 V

PARAMETER		TEST CONDITIONS	MIN	TYP	MAX	UNIT
	SCK period	Master, RX and TX	250			ns
	SCK duty cycle	Master		50%		
t_2	SSN low to SCK	Master	63			ns
t_3	SCK to SSN high	Master	63			ns
t_4	MOSI early out	Master, load = 10 pF			7	ns
t_5	MOSI late out	Master, load = 10 pF			10	ns
t_6	MISO setup	Master	90			ns
t_7	MISO hold	Master	10			ns
t_1	SCK period	Slave, RX and TX	250			ns
	SCK duty cycle	Slave		50%		ns
t_2	SSN low to SCK	Slave	63			ns
t_3	SCK to SSN high	Slave	63			ns
t_8	MISO early out	Slave, load = 10 pF			0	ns
t_9	MISO late out	Slave, load = 10 pF			95	ns
t_{10}	MOSI setup	Slave	35			ns
t_{11}	MOSI hold	Slave	10			ns
	Operating frequency	Master, TX only			8	MHz
		Master, RX and TX			4	
		Slave, RX only			8	
		Slave, RX and TX			4	

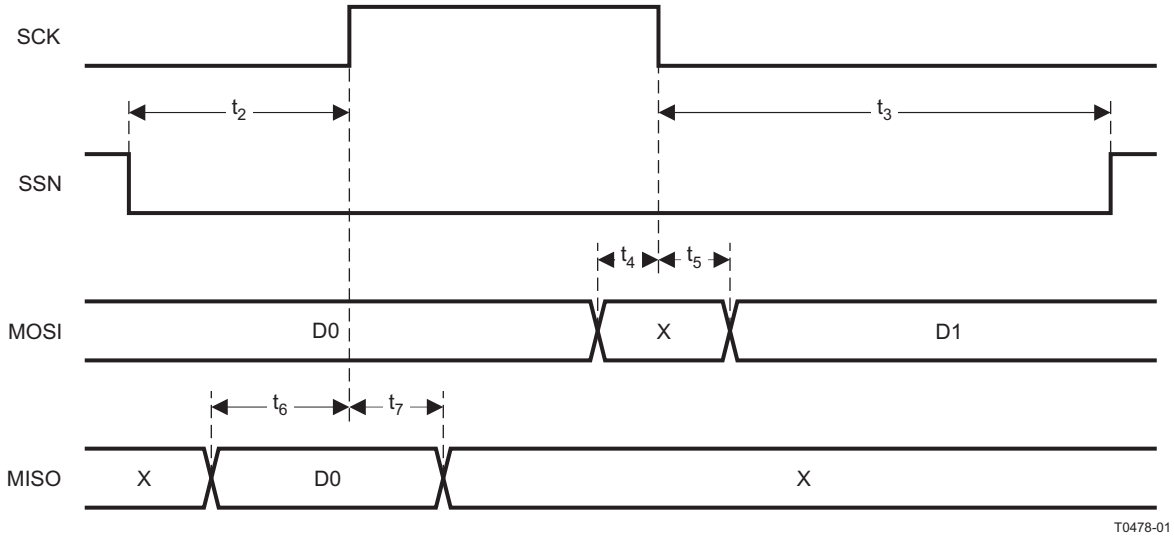

Figure 2. SPI Master AC Characteristics

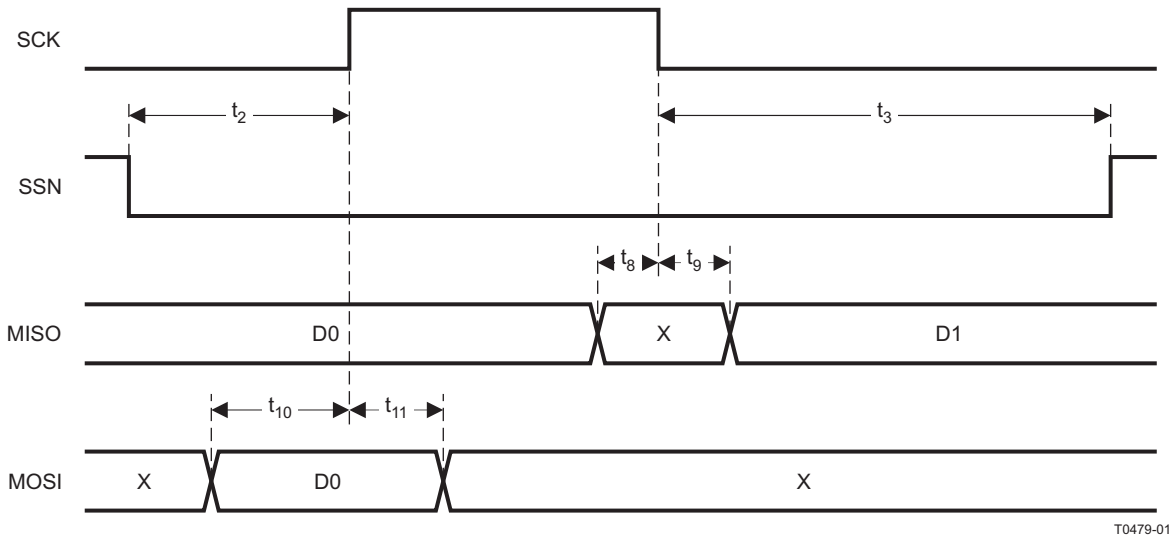

Figure 3. SPI Slave AC Characteristics

Copyright © 2010, Texas Instruments Incorporated

DEBUG INTERFACE AC CHARACTERISTICS

T_A = –40°C to 125°C, VDD = 2 V to 3.6 V

PARAMETER		TEST CONDITIONS	MIN	TYP	MAX	UNIT
f_{clk_dbg}	Debug clock frequency (see Figure 4)				12	MHz
t_1	Allowed high pulse on clock (see Figure 4)		35			ns
t_2	Allowed low pulse on clock (see Figure 4)		35			ns
t_3	RESET_N low to first falling edge on debug clock (see Figure 5)		167			ns
t_4	Falling edge on clock to RESET_N high (see Figure 5)		83			ns
t_5	RESET_N high to first debug command (see Figure 5)		83			ns
t_6	Debug data setup (see Figure 6)		2			ns
t_7	Debug data hold (see Figure 6)		4			ns
t_8	Clock-to-data delay (see Figure 6)	Load = 10 pF			30	ns

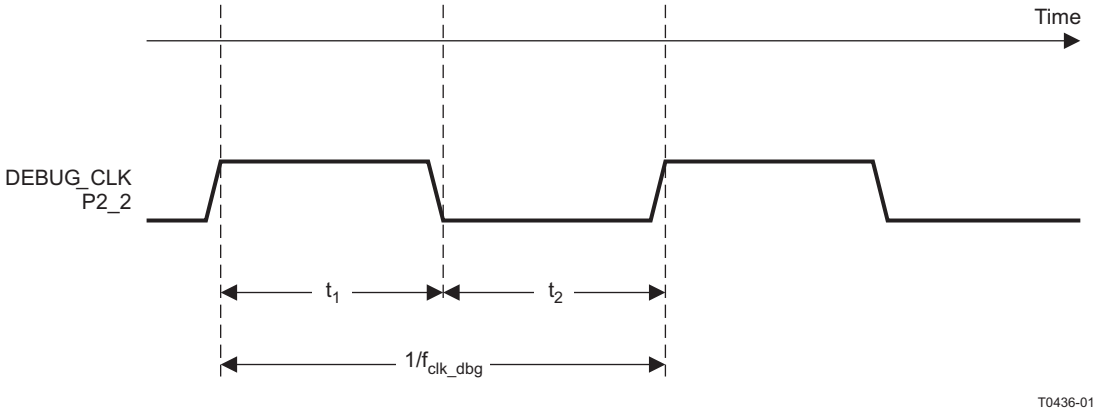

Figure 4. Debug Clock – Basic Timing

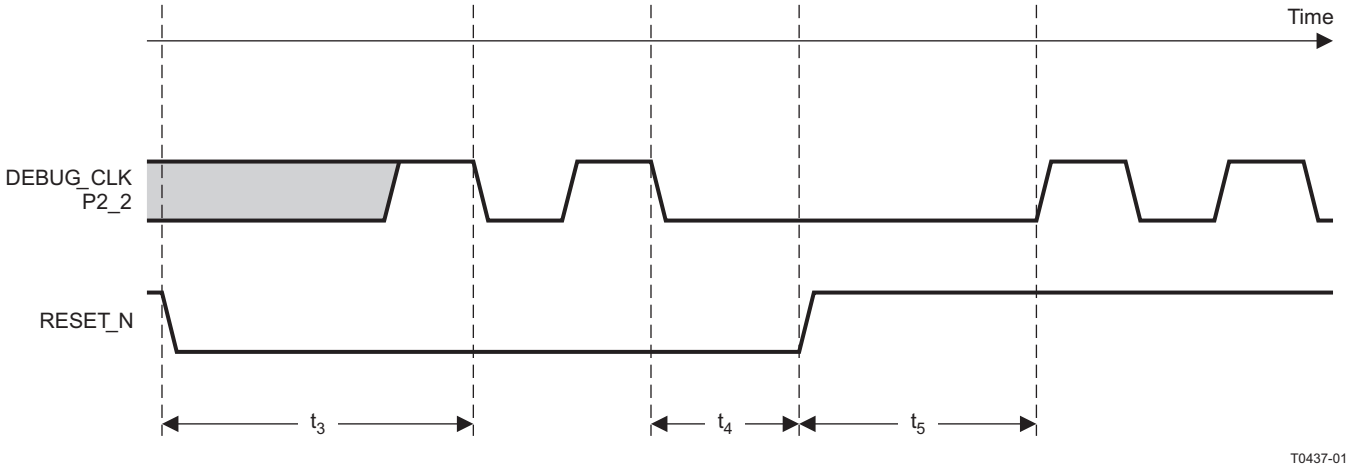

Figure 5. Data Setup and Hold Timing

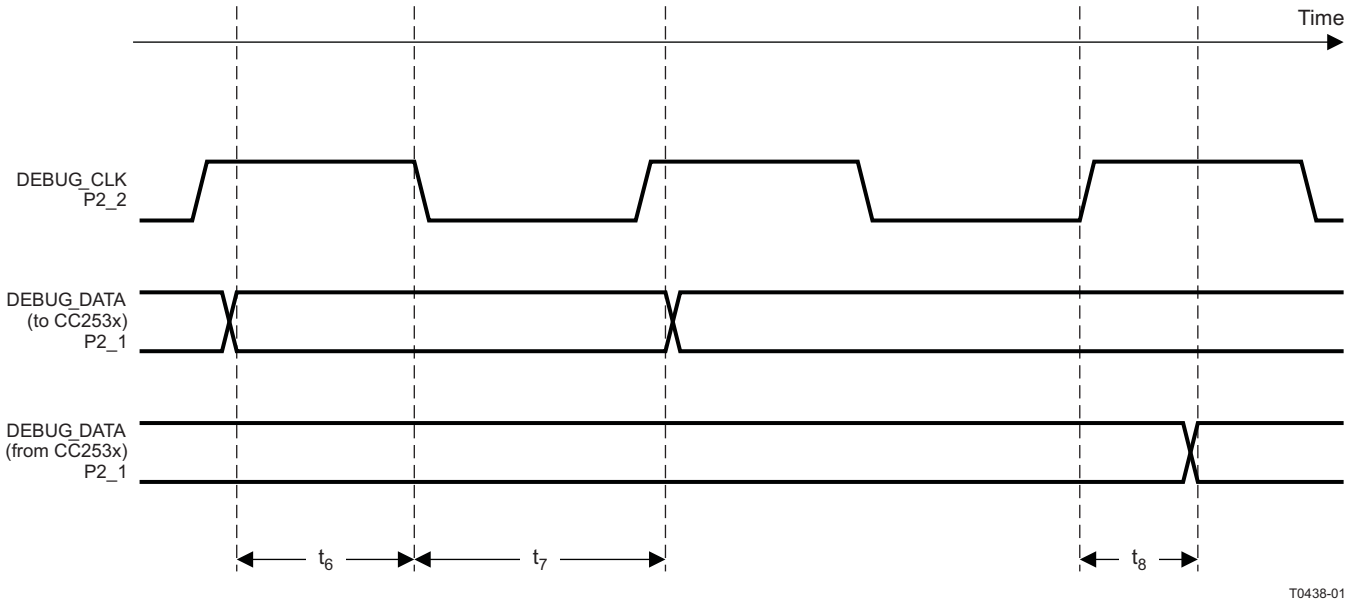

Figure 6. Debug Enable Timing

TIMER INPUT AC CHARACTERISTICS

T_A = –40°C to 125°C, VDD = 2 V to 3.6 V

PARAMETER	TEST CONDITIONS	MIN	TYP	MAX	UNIT
Input capture pulse duration	Synchronizers determine the shortest input pulse that can be recognized. The synchronizers operate at the current system clock rate (16 MHz or 32 MHz).	1.5			t_{SYSCLK}

Copyright © 2010, Texas Instruments Incorporated

DC CHARACTERISTICS

T_A = 25°C, VDD = 3 V

PARAMETER	TEST CONDITIONS	MIN	TYP	MAX	UNIT
Logic-0 input voltage				0.5	V
Logic-1 input voltage		2.5			V
Logic-0 input current	Input equals 0 V	–50		50	nA
Logic-1 input current	Input equals VDD	–50		50	nA
I/O-pin pullup and pulldown resistors			20		kΩ
Logic-0 output voltage, 4-mA pins	Output load 4 mA			0.5	V
Logic-1 output voltage, 4-mA pins	Output load 4 mA	2.4			V
Logic-0 output voltage, 20-mA pins	Output load 20 mA			0.5	V
Logic-1 output voltage, 20-mA pins	Output load 20 mA	2.4			V

DEVICE INFORMATION

PIN DESCRIPTIONS

The CC2533 pinout is shown in Figure 7 and a short description of the pins follows.

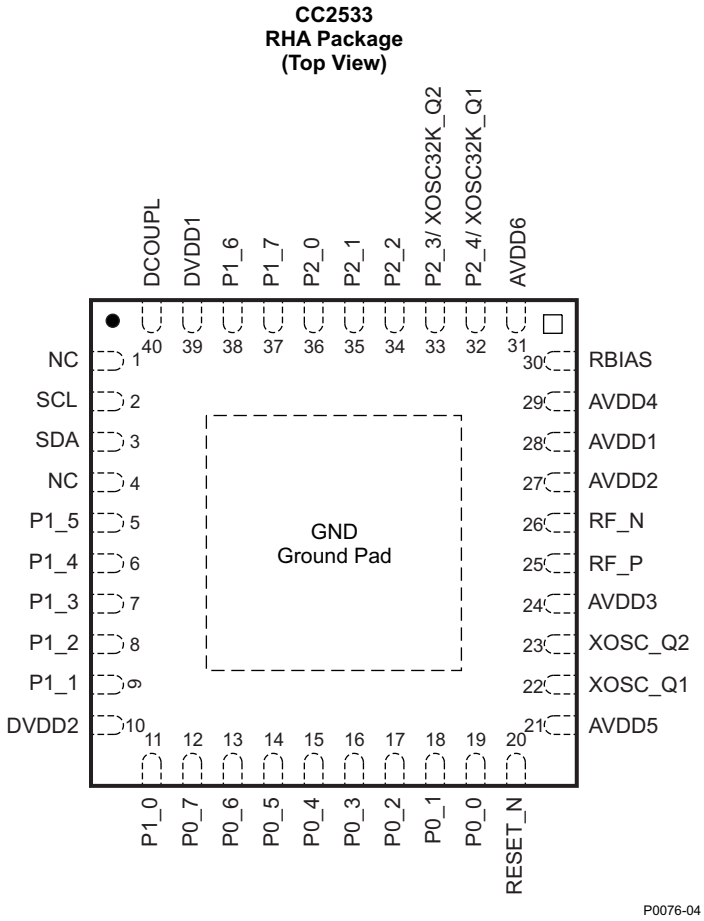

NOTE: The exposed ground pad must be connected to a solid ground plane, as this is the ground connection for the chip.

Figure 7. Pinout Top View

Table 1. Pin Descriptions

PIN NAME	PIN	PIN TYPE	DESCRIPTION
AVDD1	28	Power (analog)	2-V–3.6-V analog power-supply connection
AVDD2	27	Power (analog)	2-V–3.6-V analog power-supply connection
AVDD3	24	Power (analog)	2-V–3.6-V analog power-supply connection
AVDD4	29	Power (analog)	2-V–3.6-V analog power-supply connection
AVDD5	21	Power (analog)	2-V–3.6-V analog power-supply connection
AVDD6	31	Power (analog)	2-V–3.6-V analog power-supply connection
DCOUPL	40	Power (digital)	1.8-V digital power-supply decoupling. Do not use for supplying external circuits.
DVDD1	39	Power (digital)	2-V–3.6-V digital power-supply connection
DVDD2	10	Power (digital)	2-V–3.6-V digital power-supply connection
GND	—	Ground	The ground pad must be connected to a solid ground plane.
NC	1, 4	Unused pins	No connect
P0_0	19	Digital I/O	Port 0.0
P0_1	18	Digital I/O	Port 0.1
P0_2	17	Digital I/O	Port 0.2
P0_3	16	Digital I/O	Port 0.3
P0_4	15	Digital I/O	Port 0.4
P0_5	14	Digital I/O	Port 0.5
P0_6	13	Digital I/O	Port 0.6
P0_7	12	Digital I/O	Port 0.7
P1_0	11	Digital I/O	Port 1.0 – 20-mA drive capability
P1_1	9	Digital I/O	Port 1.1 – 20-mA drive capability
P1_2	8	Digital I/O	Port 1.2
P1_3	7	Digital I/O	Port 1.3
P1_4	6	Digital I/O	Port 1.4
P1_5	5	Digital I/O	Port 1.5
P1_6	38	Digital I/O	Port 1.6
P1_7	37	Digital I/O	Port 1.7
P2_0	36	Digital I/O	Port 2.0
P2_1	35	Digital I/O	Port 2.1
P2_2	34	Digital I/O	Port 2.2
P2_3/ XOSC32K_Q2	33	Digital I/O, analog I/O	Port 2.3/32.768 kHz XOSC
P2_4/ XOSC32K_Q1	32	Digital I/O, analog I/O	Port 2.4/32.768 kHz XOSC
RBIAS	30	Analog I/O	External precision bias resistor for reference current
RESET_N	20	Digital input	Reset, active-low
RF_N	26	RF I/O	Negative RF input signal to LNA during RX Negative RF output signal from PA during TX
RF_P	25	RF I/O	Positive RF input signal to LNA during RX Positive RF output signal from PA during TX
SCL	2	I^2C clock or digital I/O	Can be used as I^2C clock pin or digital I/O. Leave floating if not used.
SDA	3	I^2C clock or digital I/O	Can be used as I^2C data pin or digital I/O. Leave floating if not used.
XOSC_Q1	22	Analog I/O	32-MHz crystal oscillator pin 1 or external clock input
XOSC_Q2	23	Analog I/O	32-MHz crystal oscillator pin 2

Copyright © 2010, Texas Instruments Incorporated

CIRCUIT DESCRIPTION

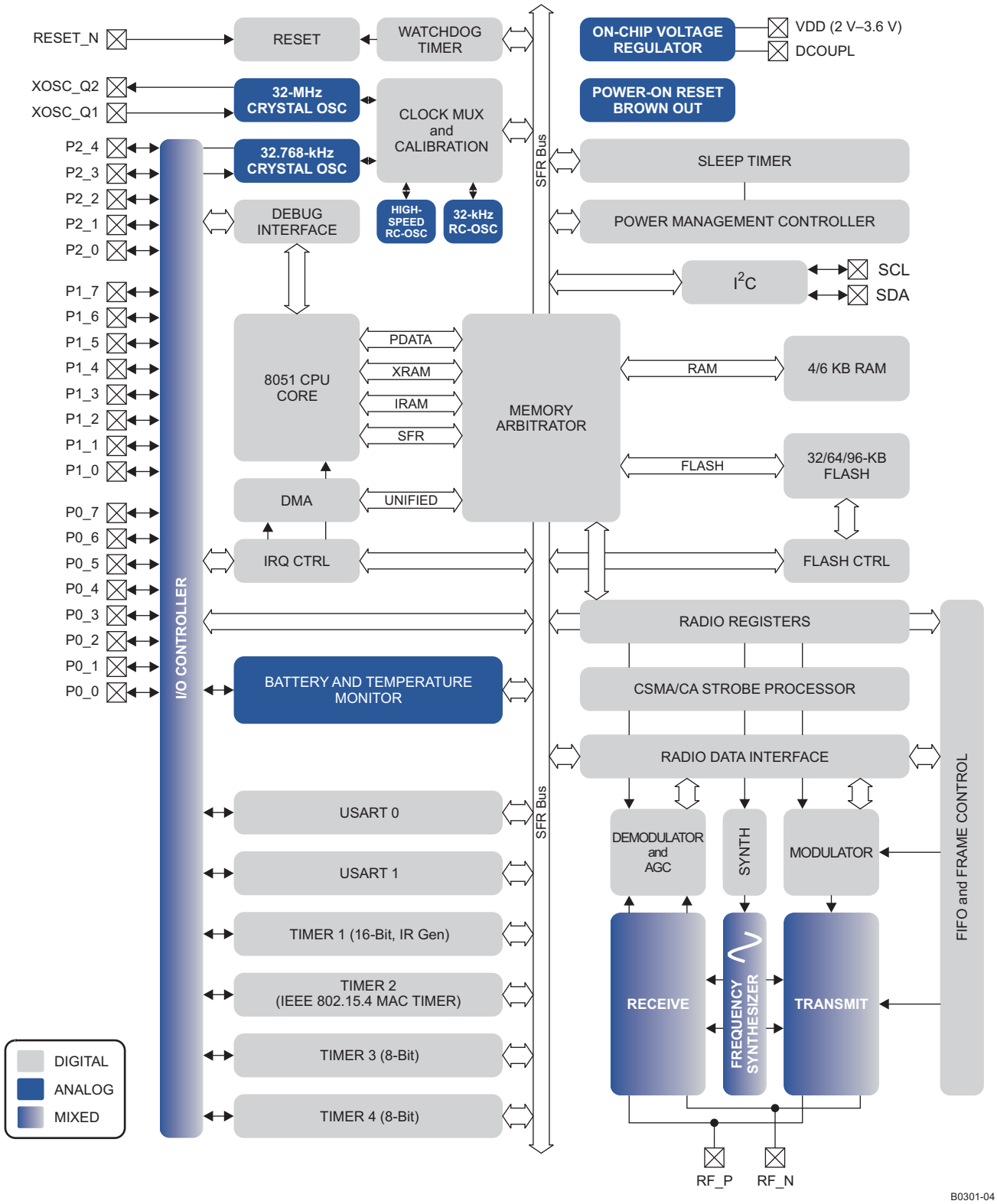

Figure 8. CC2533 Block Diagram

A block diagram of the CC2533 is shown in Figure 8. The modules can be roughly divided into one of three categories: CPU- and memory-related modules; modules related to peripherals, clocks, and power management; and radio-related modules. In the following subsections, a short description of each module that appears in Figure 8 is given.

For more details about the modules and their usage, see the corresponding chapters in the CC253x User's Guide (SWRU191).

CPU and Memory

The **8051 CPU** core used in the CC253x device family is a single-cycle 8051-compatible core. It has three different memory-access buses (SFR, DATA, and CODE/XDATA) with single-cycle access to SFR, DATA, and the main SRAM. It also includes a debug interface and an 18-input extended interrupt unit.

The **interrupt controller** services a total of 18 interrupt sources, divided into six interrupt groups, each of which is associated with one of four interrupt priorities. Any interrupt service request is serviced also when the device is in idle mode by going back to active mode. Some interrupts can also wake up the device from sleep mode (power modes 1–3).

The **memory arbiter** is at the heart of the system, as it connects the CPU and DMA controller with the physical memories and all peripherals through the SFR bus. The memory arbiter has four memory access points, access of which can map to one of three physical memories: an 8-KB SRAM, flash memory, and XREG/SFR registers. It is responsible for performing arbitration and sequencing between simultaneous memory accesses to the same physical memory.

The **4- or 6-KB SRAM** maps to the DATA memory space and to parts of the XDATA memory spaces. The 6-KB SRAM is an ultralow-power SRAM that retains its contents even in the lowest power modes (PM2/3). This is an important feature for low-power applications.

The **64- or 96-KB flash block** provides in-circuit programmable non-volatile program memory for the device, and maps into the CODE and XDATA memory spaces. In addition to holding program code and constants, the non-volatile memory allows the application to save data that must be preserved such that it is available after restarting the device. Using this feature, one can, e.g., use saved network-specific data to avoid the need for a full start-up and network find-and-join process.

Clocks and Power Management

The digital core and peripherals are powered by a 1.8-V low-dropout **voltage regulator**. It provides **power management** functionality that enables low-power operation for long battery life using different power modes. Five different **reset** sources exist to reset the device.

Peripherals

The CC2533 includes many different peripherals that allow the application designer to develop advanced applications.

The **debug interface** implements a proprietary two-wire serial interface that is used for in-circuit debugging. Through this debug interface, it is possible to perform an erasure of the entire flash memory, control which oscillators are enabled, stop and start execution of the user program, execute supplied instructions on the 8051 core, set code breakpoints, and single-step through instructions in the code. Using these techniques, it is possible to perform in-circuit debugging and external flash programming elegantly.

The device contains flash memory for storage of program code. The flash memory is programmable from the user software and through the debug interface. The **flash controller** handles writing and erasing the embedded flash memory. The flash controller allows page-wise erasure and 4-bytewise programming.

The **I/O controller** is responsible for all general-purpose I/O pins. The CPU can configure whether peripheral modules control certain pins or whether they are under software control, and if so, whether each pin is configured as an input or output and if a pullup or pulldown resistor in the pad is connected. CPU interrupts can be enabled on each pin individually. Each peripheral that connects to the I/O pins can choose between two different I/O pin locations to ensure flexibility in various applications.

 Copyright © 2010, Texas Instruments Incorporated

A versatile five-channel **DMA controller** is available in the system, accesses memory using the XDATA memory space, and thus has access to all physical memories. Each channel (trigger, priority, transfer mode, addressing mode, source and destination pointers, and transfer count) is configured with DMA descriptors anywhere in memory. Many of the hardware peripherals (AES core, flash controller, USARTs, timers, ADC interface) achieve highly efficient operation by using the DMA controller for data transfers between SFR or XREG addresses and flash/SRAM.

Timer 1 is a 16-bit timer with timer/counter/PWM functionality. It has a programmable prescaler, a 16-bit period value, and five individually programmable counter/capture channels, each with a 16-bit compare value. Each of the counter/capture channels can be used as a PWM output or to capture the timing of edges on input signals. It can also be configured in **IR Generation Mode**, where it counts Timer 3 periods and the output is ANDed with the output of Timer 3 to generate modulated consumer IR signals with minimal CPU interaction.

Timer 2 (the MAC Timer) is specially designed for supporting an IEEE 802.15.4 MAC or other time-slotted protocol in software. The timer has a configurable timer period and a 24-bit overflow counter that can be used to keep track of the number of periods that have transpired. A 40-bit capture register is also used to record the exact time at which a start-of-frame delimiter is received/transmitted or the exact time at which transmission ends, as well as two 16-bit output compare registers and two 24-bit overflow compare registers that can send various command strobes (start RX, start TX, etc.) at specific times to the radio modules.

Timer 3 and Timer 4 are 8-bit timers with timer/counter/PWM functionality. They have a programmable prescaler, an 8-bit period value, and one programmable counter channel with an 8-bit compare value. Each of the counter channels can be used as a PWM output.

The **sleep timer** is an ultralow-power timer that counts 32-kHz crystal oscillator or 32-kHz RC oscillator periods. The sleep timer runs continuously in all operating modes except power mode 3 (PM3). Typical applications of this timer are as a real-time counter or as a wake-up timer to come out of power mode 1 (PM1) or 2 (PM2).

The **battery monitor** comparator enables simple voltage monitoring in the devices that do not include an ADC. It is designed such that it is accurate in the voltage areas around 2 V, with lower resolution at higher voltages.

The **random-number generator** uses a 16-bit LFSR to generate pseudorandom numbers, which can be read by the CPU or used directly by the command strobe processor. It can be seeded with random data from noise in the radio ADC.

The **AES encryption/decryption core** allows the user to encrypt and decrypt data using the AES algorithm with 128-bit keys. The core is able to support the security operations required by IEEE 802.15.4 MAC security, the ZigBee network layer, and the application layer.

A built-in **watchdog timer** allows the CC2533 to reset itself in case the firmware hangs. When enabled by software, the watchdog timer must be cleared periodically; otherwise, it resets the device when it times out. It can alternatively be configured for use as a general 32-kHz timer.

USART 0 and USART 1 are each configurable as either a SPI master/slave or a UART. They provide double buffering on both RX and TX, as well as hardware flow control, and are thus well suited to high-throughput full-duplex applications. Each has its own high-precision baud-rate generator, thus leaving the ordinary timers free for other uses.

The **I^2C** module provides a digital peripheral connection with two pins and supports both master and slave operation.

Radio

The CC2533 features an IEEE 802.15.4-compliant radio transceiver. The RF core controls the analog radio modules. In addition, it provides an interface between the MCU and the radio which makes it possible to issue commands, read status, and automate and sequence radio events. The radio also includes a packet-filtering and address-recognition module.

Copyright © 2010, Texas Instruments Incorporated

TYPICAL CHARACTERISTICS

OUTPUT POWER vs FREQUENCY

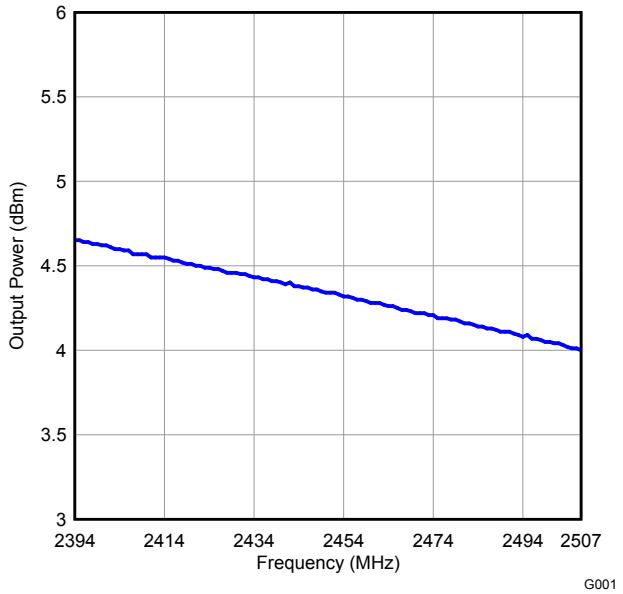

Figure 9.

OUTPUT POWER vs TEMPERATURE

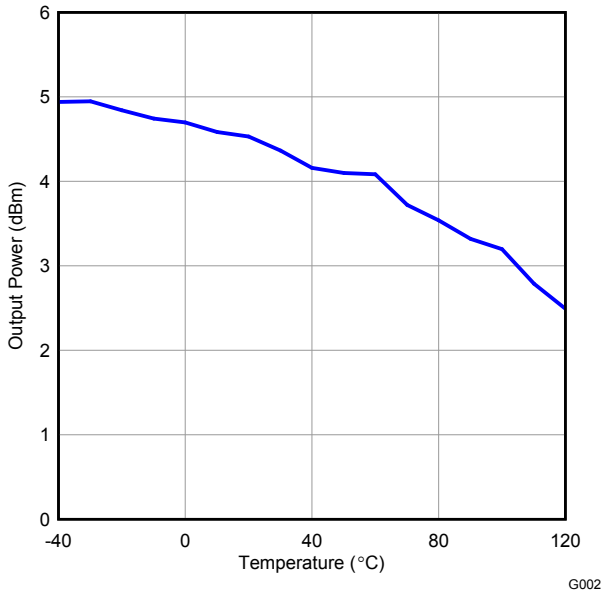

Figure 10.

SENSITIVITY vs FREQUENCY

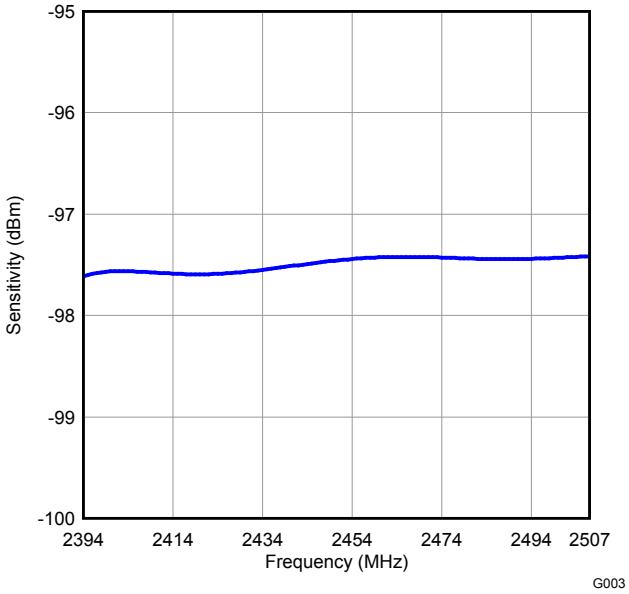

Figure 11.

SENSITIVITY vs TEMPERATURE

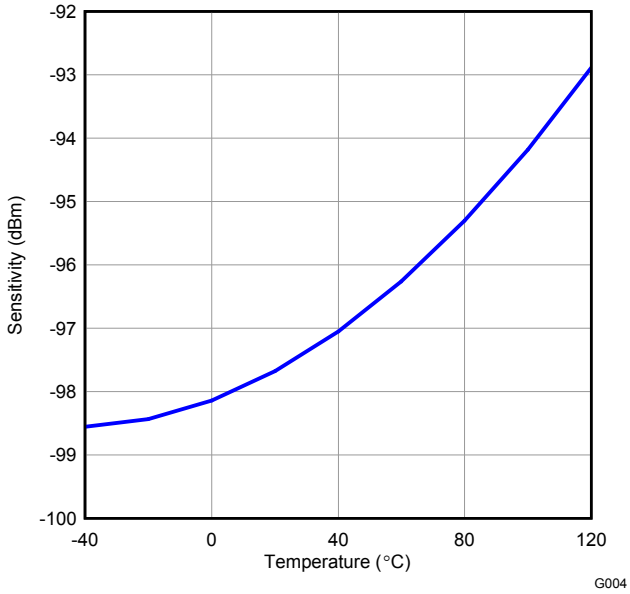

Figure 12.

Copyright © 2010, Texas Instruments Incorporated

TYPICAL CHARACTERISTICS (continued)

SENSITIVITY vs SUPPLY VOLTAGE

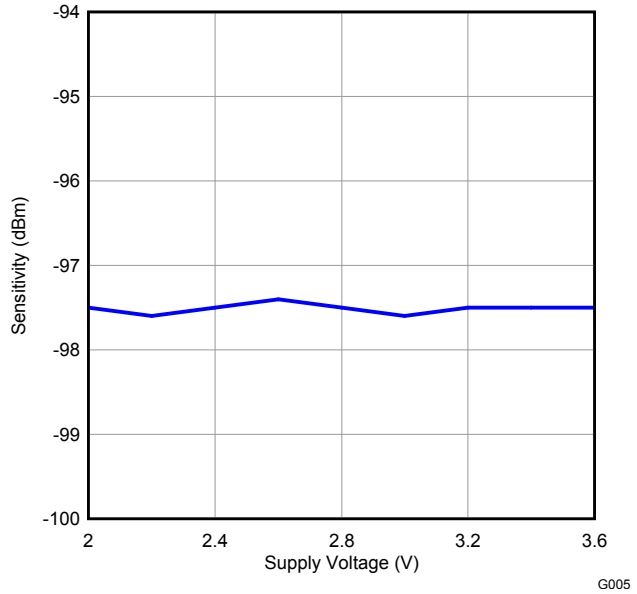

Figure 13.

SENSITIVITY vs ERROR VECTOR MAGNITUDE

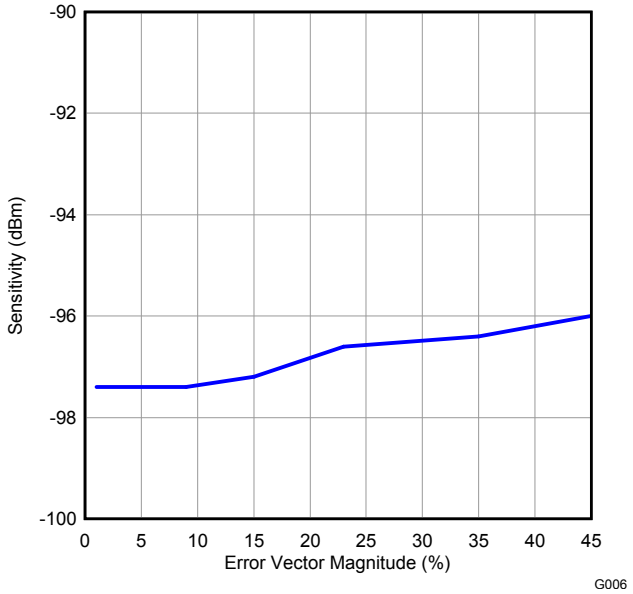

Figure 14.

SENSITIVITY vs FREQUENCY OFFSET

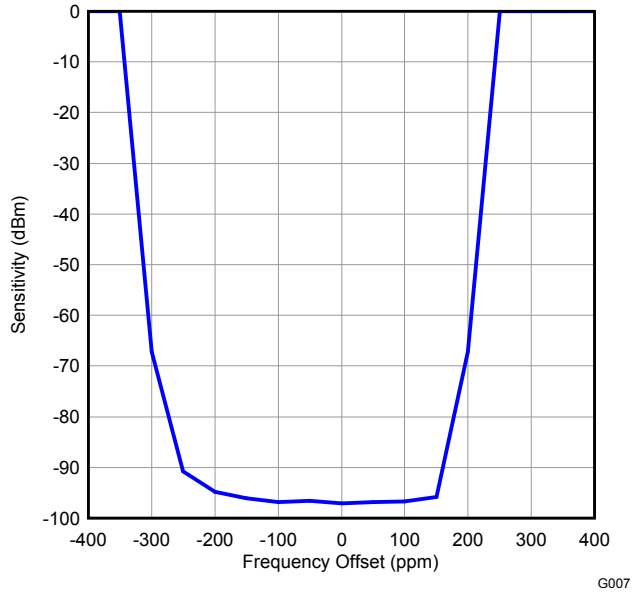

Figure 15.

ALTERNATE CHANNEL REJECTION (802.15.4 INTERFERER) vs CARRIER LEVEL

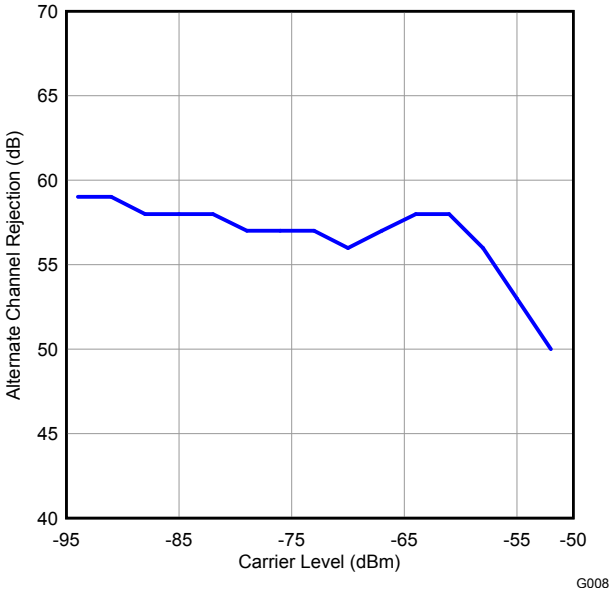

Figure 16.

TYPICAL CHARACTERISTICS (continued)

INTERFERER REJECTION (802.15.4 INTERFERER)
vs
INTERFERER FREQUENCY
(CARRIER AT –82 dBm, 2440 MHz)

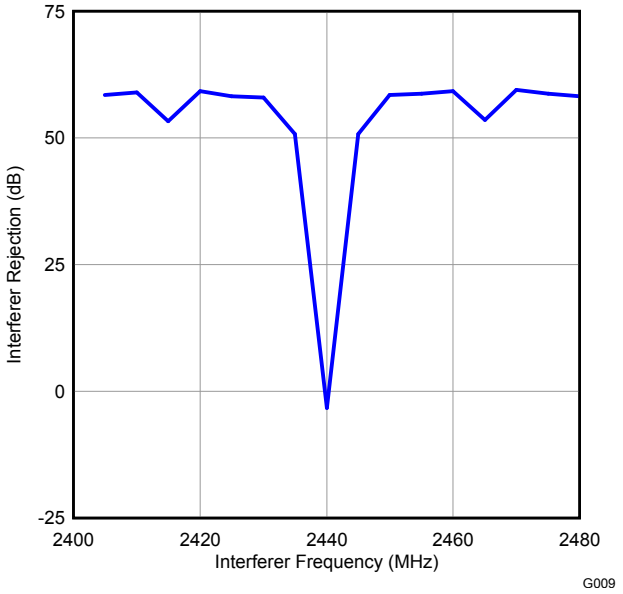

Figure 17.

POWER MODE 3 CURRENT
vs
TEMPERATURE

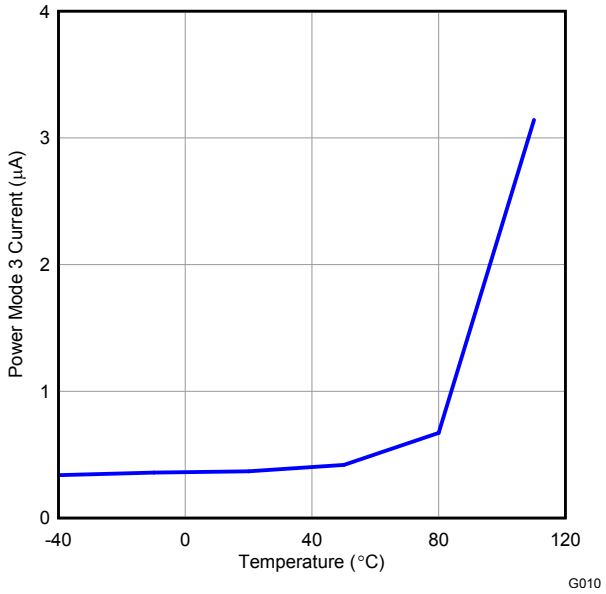

Figure 18.

Recommended RF Settings

This section contains a summary of the register settings that must be updated from their default value to have optimal performance. The following settings should be set for both RX and TX. Although not all settings are necessary for both RX and TX, it is recommended for simplicity (allowing one set of settings to be written at the initialization of the code).

Table 2. Recommended RF Register Settings

Register Name	Value
FRMCTRL0	0x43
FRMCTRL1	0x00
TXFILTCFG	0x09
FSCAL1	0x00
IVCTRL	0x0F
FSCTRL	0x55

Copyright © 2010, Texas Instruments Incorporated

Boost-Mode TX Settings

This section contains the register settings for boost-mode TX. Note that it is recommended to add two additional components (a capacitor and an inductor) adjacent to the capacitor C253 in Figure 19 in order to reduce third-harmonic spurious emission to simplify passing regulations. There are three *do not mount* pads on the EM reference design. Two of these should be used to mount the additional components. The capacitor (0.9 pF) should be mounted to the pad on the chip side of C253 (to the left of C253 in Figure 19). The inductor (4.3 nH) should be mounted between C253 and the antenna on the pad closest to C253 (to the right of C253 in Figure 19). Using this filter lowers the output power 0.12 dB when using boost-mode TX and 0.4 dB at regular full power.

Table 3. Boost Mode TX Register Settings

Register Name	Value
FRMCTRL0	0x43
FRMCTRL1	0x00
TXFILTCFG	0x09
FSCAL1	0x00
IVCTRL	0x0F
FSCTRL	0xF5
TXCTRL	0x74
TXPOWER	0xFD

Table 4. Recommended Output Power Settings(1)

TXPOWER Register Setting	Typical Output Power (dBm)	Typical Current Consumption (mA)
Boost mode TX	7	38.8
0xEC	4.5	32.3
0xDC	3	30.4
0xCC	1.7	29.6
0xBC	0.3	28.5
0xAC	–1	27.9
0x9C	–2.8	26.7
0x8C	–4.1	26.3
0x7C	–5.9	25.8
0x6C	–7.7	25.5
0x5C	–9.9	25.3
0x4C	–12.4	25.1
0x3C	–14.9	25.0
0x2C	–16.6	24.9
0x1C	–18.7	24.9
0x0C	–20.4	23.3

(1) Measured on Texas Instruments CC2533 EM reference design with T_A = 25°C, VDD = 3 V and f_c = 2440 MHz, unless otherwise noted. See Table 2 for recommended register settings.

APPLICATION INFORMATION

Few external components are required for the operation of the CC2533. A typical application circuit is shown in Figure 19. Typical values and description of external components are shown in Table 5.

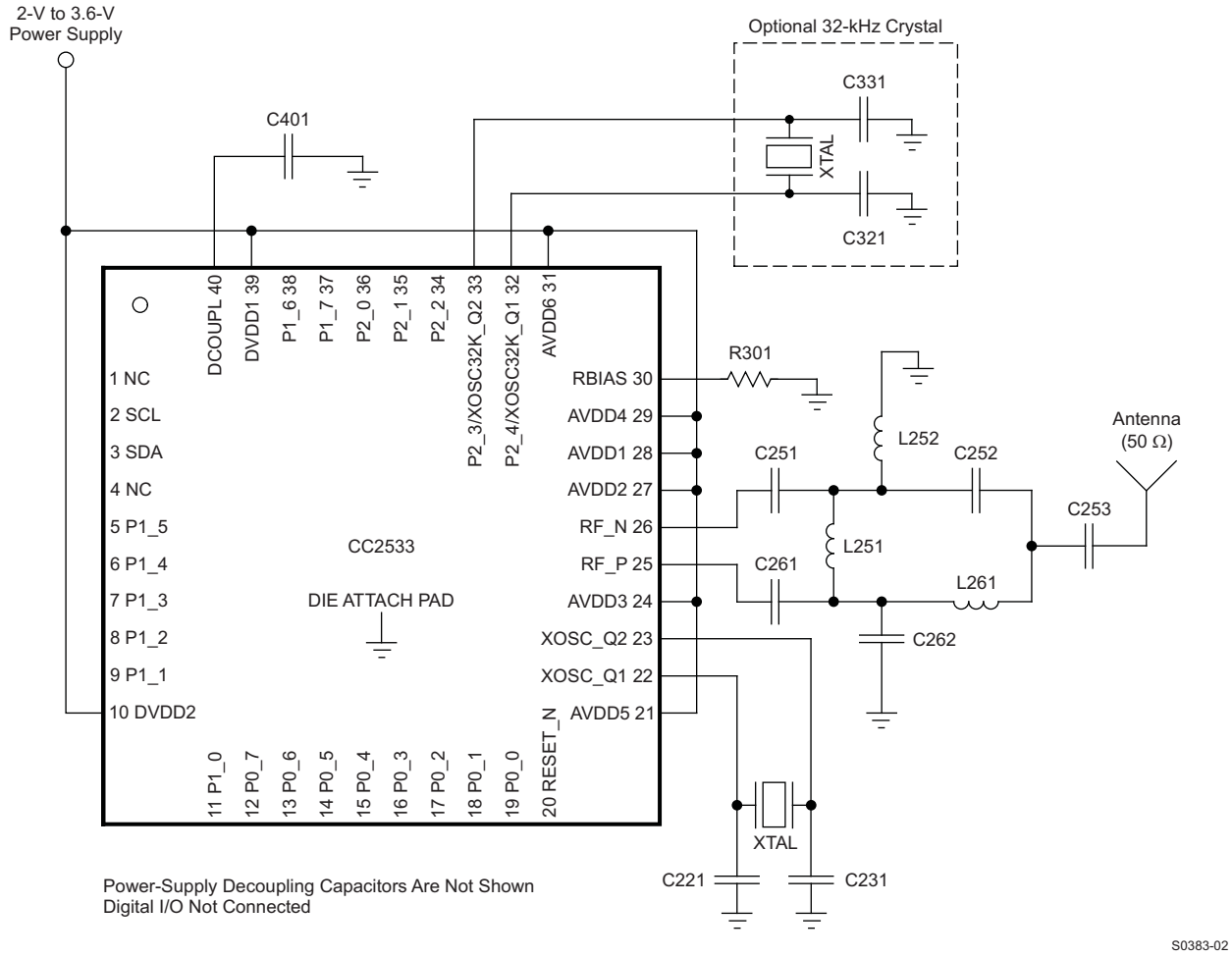

Figure 19. CC2533 Application Circuit

Table 5. Overview of External Components (Excluding Supply Decoupling Capacitors)

Component	Description	Value
C221	32-MHz xtal loading capacitor	27 pF
C231	32-MHz xtal loading capacitor	27 pF
C251	Part of the RF matching network	18 pF
C252	Part of the RF matching network	1 pF
C253	Part of the RF matching network	2.2 pF
C261	Part of the RF matching network	18 pF
C262	Part of the RF matching network	1 pF
C321	32-kHz xtal loading capacitor	15 pF
C331	32-kHz xtal loading capacitor	15 pF
C401	Decoupling capacitor for the internal digital regulator	1 μF
L252	Part of the RF matching network	2 nH

Copyright © 2010, Texas Instruments Incorporated

Table 5. Overview of External Components (Excluding Supply Decoupling Capacitors) (continued)

Component	Description	Value
L261	Part of the RF matching network	2 nH
R301	Resistor used for internal biasing	56 kΩ

Input/Output Matching

When using an unbalanced antenna such as a monopole, a balun should be used to optimize performance. The balun can be implemented using low-cost discrete inductors and capacitors. The recommended balun shown consists of C262, L261, C252, and L252.

If a balanced antenna such as a folded dipole is used, the balun can be omitted.

Crystal

An external 32-MHz crystal, XTAL1, with two loading capacitors (C221 and C231) is used for the 32-MHz crystal oscillator. See the *32-MHz Crystal Oscillator* section for details. The load capacitance seen by the 32-MHz crystal is given by:

$$C_L = \frac{1}{\frac{1}{C_{221}} + \frac{1}{C_{231}}} + C_{parasitic} \tag{1}$$

XTAL2 is an optional 32.768-kHz crystal, with two loading capacitors (C321 and C331) used for the 32.768-kHz crystal oscillator. The 32.768-kHz crystal oscillator is used in applications where both very low sleep-current consumption and accurate wake-up times are needed. The load capacitance seen by the 32.768-kHz crystal is given by:

$$C_L = \frac{1}{\frac{1}{C_{321}} + \frac{1}{C_{331}}} + C_{parasitic} \tag{2}$$

A series resistor may be used to comply with the ESR requirement.

On-Chip 1.8-V Voltage-Regulator Decoupling

The 1.8-V on-chip voltage regulator supplies the 1.8-V digital logic. This regulator requires a decoupling capacitor (C401) for stable operation.

Power-Supply Decoupling and Filtering

Proper power-supply decoupling must be used for optimum performance. The placement and size of the decoupling capacitors and the power supply filtering are very important to achieve the best performance in an application. TI provides a compact reference design that should be followed very closely.

REFERENCES

1. IEEE Std. 802.15.4-2006: Wireless Medium Access Control (MAC) and Physical Layer (PHY) Specifications for Low-Rate Wireless Personal Area Networks (LR-WPANs)
   http://standards.ieee.org/getieee802/download/802.15.4-2006.pdf
2. CC253x User's Guide – CC253x System-on-Chip Solution for 2.4 GHz IEEE 802.15.4 and ZigBee Applications (SWRU191)

ADDITIONAL INFORMATION

Texas Instruments offers a wide selection of cost-effective, low-power RF solutions for proprietary and standard-based wireless applications for use in industrial and consumer applications. Our selection includes RF transceivers, RF transmitters, RF front ends, and System-on-Chips as well as various software solutions for the sub-1-GHz and 2.4-GHz frequency bands.

In addition, Texas Instruments provides a large selection of support collateral such as development tools, technical documentation, reference designs, application expertise, customer support, third-party and university programs.

The Low-Power RF E2E Online Community provides technical support forums, videos and blogs, and the chance to interact with fellow engineers from all over the world.

With a broad selection of product solutions, end application possibilities, and a range of technical support, Texas Instruments offers the broadest low-power RF portfolio. We make RF easy!

The following subsections point to where to find more information.

Texas Instruments Low-Power RF Web Site

Texas Instruments' Low-Power RF Web site has all our latest products, application and design notes, FAQ section, news and events updates, and much more. Just go to www.ti.com/lprf.

Low-Power RF Online Community

- Forums, videos, and blogs
- RF design help
- E2E interaction

Join us today at www.ti.com/lprf-forum.

Texas Instruments Low-Power RF Developer Network

Texas Instruments has launched an extensive network of low-power RF development partners to help customers speed up their application development. The network consists of recommended companies, RF consultants, and independent design houses that provide a series of hardware module products and design services, including:

- RF circuit, low-power RF, and ZigBee design services
- Low-power RF and ZigBee module solutions and development tools
- RF certification services and RF circuit manufacturing

Need help with modules, engineering services or development tools?

Search the Low-Power RF Developer Network to find a suitable partner. www.ti.com/lprfnetwork

Low-Power RF eNewsletter

The Low-Power RF eNewsletter keeps you up-to-date on new products, news releases, developers' news, and other news and events associated with low-power RF products from TI. The Low-Power RF eNewsletter articles include links to get more online information.

Sign up today on www.ti.com/lprfnewsletter

Copyright © 2010, Texas Instruments Incorporated

PACKAGING INFORMATION

Orderable part number	Status (1)	Material type (2)	Package | Pins	Package qty | Carrier	RoHS (3)	Lead finish/ Ball material (4)	MSL rating/ Peak reflow (5)	Op temp (°C)	Part marking (6)
CC2533F32RHAR	Active	Production	VQFN (RHA) | 40	2500 | LARGE T&R	Yes	NIPDAU | NIPDAUAG	Level-3-260C-168 HR	-40 to 125	CC2533 F32
CC2533F32RHAR.A	Active	Production	VQFN (RHA) | 40	2500 | LARGE T&R	Yes	NIPDAU	Level-3-260C-168 HR	-40 to 125	CC2533 F32
CC2533F32RHAR.B	Active	Production	VQFN (RHA) | 40	2500 | LARGE T&R	Yes	NIPDAU	Level-3-260C-168 HR	-40 to 125	CC2533 F32
CC2533F32RHAT	Active	Production	VQFN (RHA) | 40	250 | SMALL T&R	Yes	NIPDAU | NIPDAUAG	Level-3-260C-168 HR	-40 to 125	CC2533 F32
CC2533F32RHAT.A	Active	Production	VQFN (RHA) | 40	250 | SMALL T&R	Yes	NIPDAU	Level-3-260C-168 HR	-40 to 125	CC2533 F32
CC2533F32RHAT.B	Active	Production	VQFN (RHA) | 40	250 | SMALL T&R	Yes	NIPDAU	Level-3-260C-168 HR	-40 to 125	CC2533 F32
CC2533F64RHAR	Active	Production	VQFN (RHA) | 40	2500 | LARGE T&R	Yes	NIPDAU | NIPDAUAG	Level-3-260C-168 HR	-40 to 125	CC2533 F64
CC2533F64RHAR.A	Active	Production	VQFN (RHA) | 40	2500 | LARGE T&R	Yes	NIPDAU	Level-3-260C-168 HR	-40 to 125	CC2533 F64
CC2533F64RHAR.B	Active	Production	VQFN (RHA) | 40	2500 | LARGE T&R	Yes	NIPDAU	Level-3-260C-168 HR	-40 to 125	CC2533 F64
CC2533F64RHAT	Active	Production	VQFN (RHA) | 40	250 | SMALL T&R	Yes	NIPDAU | NIPDAUAG	Level-3-260C-168 HR	-40 to 125	CC2533 F64
CC2533F64RHAT.A	Active	Production	VQFN (RHA) | 40	250 | SMALL T&R	Yes	NIPDAU	Level-3-260C-168 HR	-40 to 125	CC2533 F64
CC2533F64RHAT.B	Active	Production	VQFN (RHA) | 40	250 | SMALL T&R	Yes	NIPDAU	Level-3-260C-168 HR	-40 to 125	CC2533 F64
CC2533F96RHAR	Active	Production	VQFN (RHA) | 40	2500 | LARGE T&R	Yes	NIPDAU | NIPDAUAG	Level-3-260C-168 HR	-40 to 125	CC2533 F96
CC2533F96RHAR.A	Active	Production	VQFN (RHA) | 40	2500 | LARGE T&R	Yes	NIPDAU	Level-3-260C-168 HR	-40 to 125	CC2533 F96
CC2533F96RHAR.B	Active	Production	VQFN (RHA) | 40	2500 | LARGE T&R	Yes	NIPDAU	Level-3-260C-168 HR	-40 to 125	CC2533 F96
CC2533F96RHAT	Active	Production	VQFN (RHA) | 40	250 | SMALL T&R	Yes	NIPDAU | NIPDAUAG	Level-3-260C-168 HR	-40 to 125	CC2533 F96

Orderable part number	Status (1)	Material type (2)	Package | Pins	Package qty | Carrier	RoHS (3)	Lead finish/ Ball material (4)	MSL rating/ Peak reflow (5)	Op temp (°C)	Part marking (6)
CC2533F96RHAT.A	Active	Production	VQFN (RHA) | 40	250 | SMALL T&R	Yes	NIPDAU	Level-3-260C-168 HR	-40 to 125	CC2533 F96
CC2533F96RHAT.B	Active	Production	VQFN (RHA) | 40	250 | SMALL T&R	Yes	NIPDAU	Level-3-260C-168 HR	-40 to 125	CC2533 F96

(1) **Status:** For more details on status, see our product life cycle.

(2) **Material type:** When designated, preproduction parts are prototypes/experimental devices, and are not yet approved or released for full production. Testing and final process, including without limitation quality assurance, reliability performance testing, and/or process qualification, may not yet be complete, and this item is subject to further changes or possible discontinuation. If available for ordering, purchases will be subject to an additional waiver at checkout, and are intended for early internal evaluation purposes only. These items are sold without warranties of any kind.

(3) **RoHS values:** Yes, No, RoHS Exempt. See the TI RoHS Statement for additional information and value definition.

(4) **Lead finish/Ball material:** Parts may have multiple material finish options. Finish options are separated by a vertical ruled line. Lead finish/Ball material values may wrap to two lines if the finish value exceeds the maximum column width.

(5) **MSL rating/Peak reflow:** The moisture sensitivity level ratings and peak solder (reflow) temperatures. In the event that a part has multiple moisture sensitivity ratings, only the lowest level per JEDEC standards is shown. Refer to the shipping label for the actual reflow temperature that will be used to mount the part to the printed circuit board.

(6) **Part marking:** There may be an additional marking, which relates to the logo, the lot trace code information, or the environmental category of the part.

Multiple part markings will be inside parentheses. Only one part marking contained in parentheses and separated by a "~" will appear on a part. If a line is indented then it is a continuation of the previous line and the two combined represent the entire part marking for that device.

Important Information and Disclaimer: The information provided on this page represents TI's knowledge and belief as of the date that it is provided. TI bases its knowledge and belief on information provided by third parties, and makes no representation or warranty as to the accuracy of such information. Efforts are underway to better integrate information from third parties. TI has taken and continues to take reasonable steps to provide representative and accurate information but may not have conducted destructive testing or chemical analysis on incoming materials and chemicals. TI and TI suppliers consider certain information to be proprietary, and thus CAS numbers and other limited information may not be available for release.

In no event shall TI's liability arising out of such information exceed the total purchase price of the TI part(s) at issue in this document sold by TI to Customer on an annual basis.

TAPE AND REEL INFORMATION

REEL DIMENSIONS

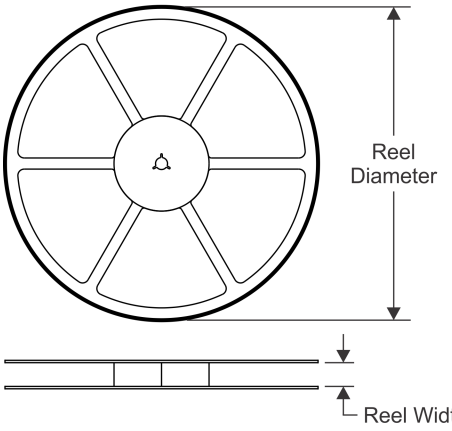

TAPE DIMENSIONS

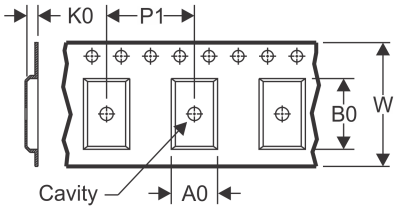

A0	Dimension designed to accommodate the component width
B0	Dimension designed to accommodate the component length
K0	Dimension designed to accommodate the component thickness
W	Overall width of the carrier tape
P1	Pitch between successive cavity centers

QUADRANT ASSIGNMENTS FOR PIN 1 ORIENTATION IN TAPE

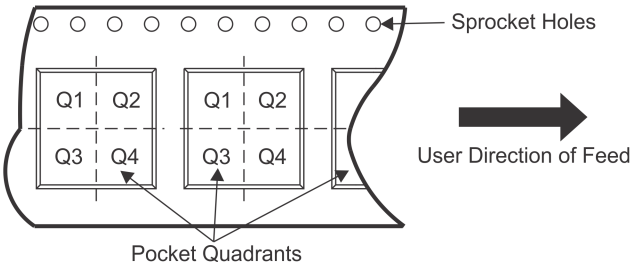

*All dimensions are nominal

Device	Package Type	Package Drawing	Pins	SPQ	Reel Diameter (mm)	Reel Width W1 (mm)	A0 (mm)	B0 (mm)	K0 (mm)	P1 (mm)	W (mm)	Pin1 Quadrant
CC2533F32RHAR	VQFN	RHA	40	2500	330.0	16.4	6.3	6.3	1.1	12.0	16.0	Q2
CC2533F32RHAT	VQFN	RHA	40	250	180.0	16.4	6.3	6.3	1.1	12.0	16.0	Q2
CC2533F64RHAR	VQFN	RHA	40	2500	330.0	16.4	6.3	6.3	1.1	12.0	16.0	Q2
CC2533F64RHAT	VQFN	RHA	40	250	180.0	16.4	6.3	6.3	1.1	12.0	16.0	Q2
CC2533F96RHAR	VQFN	RHA	40	2500	330.0	16.4	6.3	6.3	1.1	12.0	16.0	Q2
CC2533F96RHAT	VQFN	RHA	40	250	180.0	16.4	6.3	6.3	1.1	12.0	16.0	Q2

TAPE AND REEL BOX DIMENSIONS

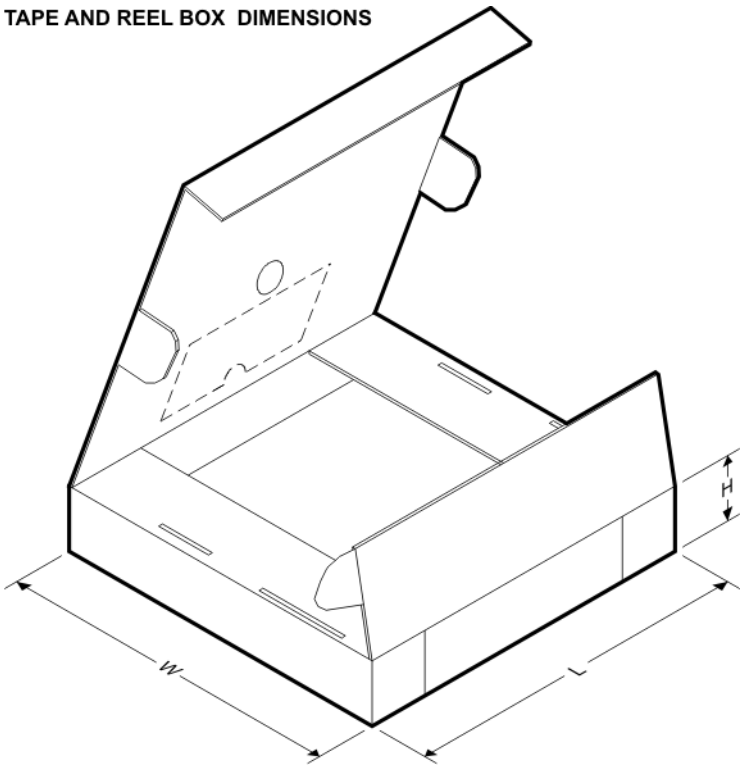

*All dimensions are nominal

Device	Package Type	Package Drawing	Pins	SPQ	Length (mm)	Width (mm)	Height (mm)
CC2533F32RHAR	VQFN	RHA	40	2500	367.0	367.0	38.0
CC2533F32RHAT	VQFN	RHA	40	250	210.0	185.0	35.0
CC2533F64RHAR	VQFN	RHA	40	2500	367.0	367.0	38.0
CC2533F64RHAT	VQFN	RHA	40	250	210.0	185.0	35.0
CC2533F96RHAR	VQFN	RHA	40	2500	367.0	367.0	38.0
CC2533F96RHAT	VQFN	RHA	40	250	210.0	185.0	35.0

GENERIC PACKAGE VIEW

RHA 40

VQFN - 1 mm max height

6 x 6, 0.5 mm pitch

PLASTIC QUAD FLATPACK - NO LEAD

This image is a representation of the package family, actual package may vary.
Refer to the product data sheet for package details.

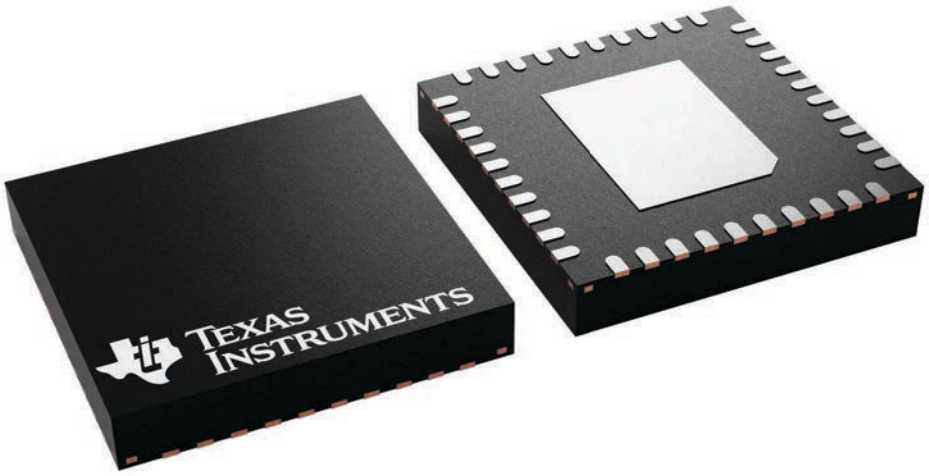

4225870/A

RHA0040H

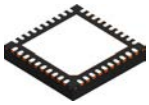

PACKAGE OUTLINE

VQFN - 1 mm max height

PLASTIC QUAD FLATPACK - NO LEAD

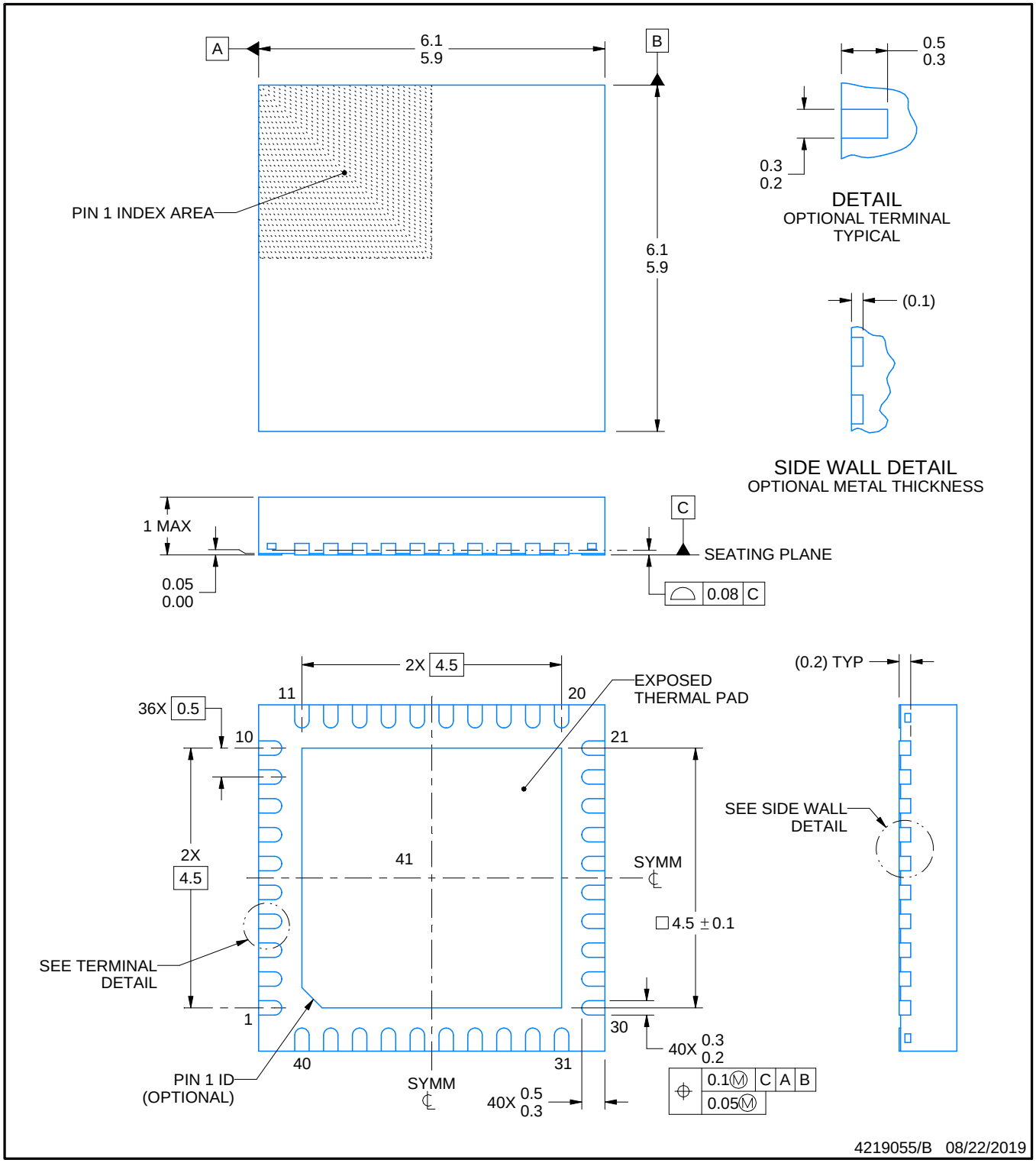

NOTES:

1. All linear dimensions are in millimeters. Any dimensions in parenthesis are for reference only. Dimensioning and tolerancing per ASME Y14.5M.
2. This drawing is subject to change without notice.
3. The package thermal pad must be soldered to the printed circuit board for thermal and mechanical performance.

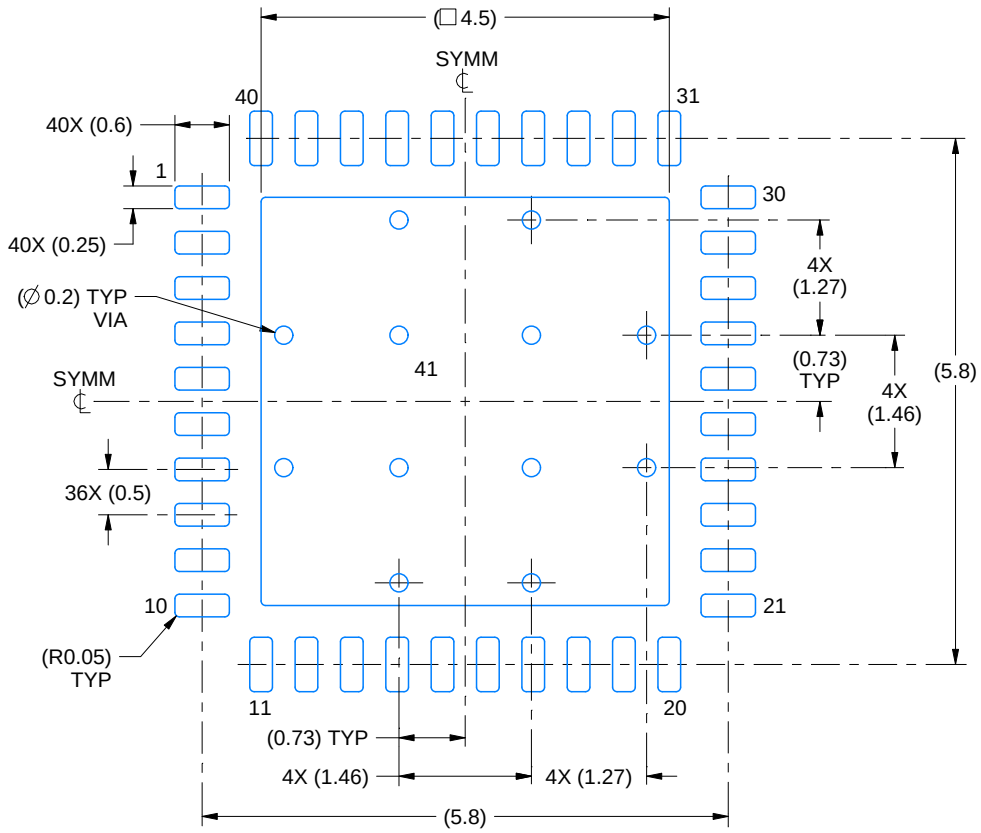

LAND PATTERN EXAMPLE
EXPOSED METAL SHOWN
SCALE:12X

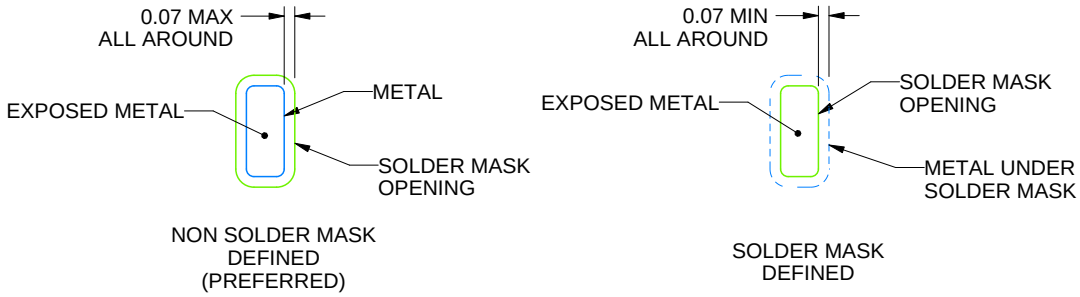

SOLDER MASK DETAILS

4219055/B 08/22/2019

NOTES: (continued)

4. This package is designed to be soldered to a thermal pad on the board. For more information, see Texas Instruments literature number SLUA271 (www.ti.com/lit/slua271).
5. Vias are optional depending on application, refer to device data sheet. If any vias are implemented, refer to their locations shown on this view. It is recommended that vias under paste be filled, plugged or tented.

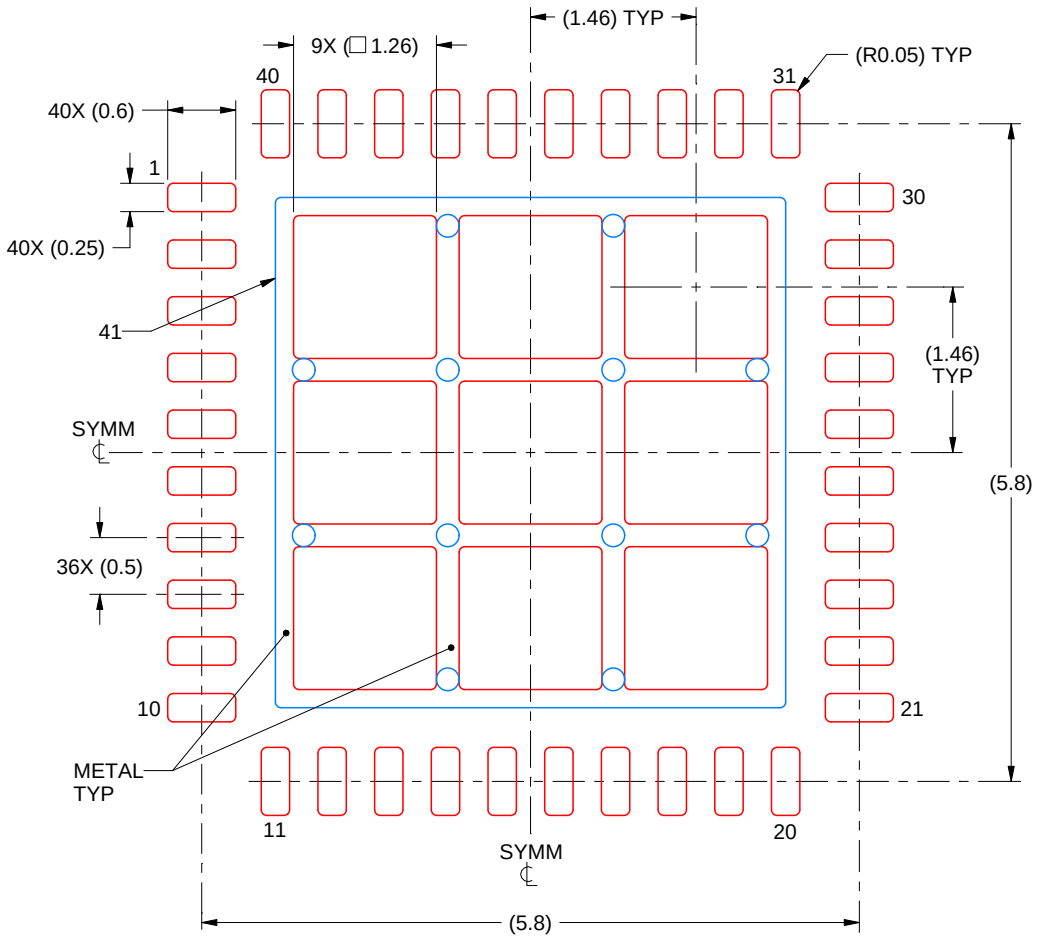

SOLDER PASTE EXAMPLE
BASED ON 0.125 mm THICK STENCIL

EXPOSED PAD 41:
70% PRINTED SOLDER COVERAGE BY AREA
SCALE:15X

4219055/B 08/22/2019

NOTES: (continued)

6. Laser cutting apertures with trapezoidal walls and rounded corners may offer better paste release. IPC-7525 may have alternate design recommendations.

IMPORTANT NOTICE AND DISCLAIMER

TI PROVIDES TECHNICAL AND RELIABILITY DATA (INCLUDING DATASHEETS), DESIGN RESOURCES (INCLUDING REFERENCE DESIGNS), APPLICATION OR OTHER DESIGN ADVICE, WEB TOOLS, SAFETY INFORMATION, AND OTHER RESOURCES “AS IS” AND WITH ALL FAULTS, AND DISCLAIMS ALL WARRANTIES, EXPRESS AND IMPLIED, INCLUDING WITHOUT LIMITATION ANY IMPLIED WARRANTIES OF MERCHANTABILITY, FITNESS FOR A PARTICULAR PURPOSE OR NON-INFRINGEMENT OF THIRD PARTY INTELLECTUAL PROPERTY RIGHTS.

These resources are intended for skilled developers designing with TI products. You are solely responsible for (1) selecting the appropriate TI products for your application, (2) designing, validating and testing your application, and (3) ensuring your application meets applicable standards, and any other safety, security, regulatory or other requirements.

These resources are subject to change without notice. TI grants you permission to use these resources only for development of an application that uses the TI products described in the resource. Other reproduction and display of these resources is prohibited. No license is granted to any other TI intellectual property right or to any third party intellectual property right. TI disclaims responsibility for, and you fully indemnify TI and its representatives against any claims, damages, costs, losses, and liabilities arising out of your use of these resources.

TI’s products are provided subject to TI’s Terms of Sale, TI’s General Quality Guidelines, or other applicable terms available either on ti.com or provided in conjunction with such TI products. TI’s provision of these resources does not expand or otherwise alter TI’s applicable warranties or warranty disclaimers for TI products. Unless TI explicitly designates a product as custom or customer-specified, TI products are standard, catalog, general purpose devices.

TI objects to and rejects any additional or different terms you may propose.

Copyright © 2026, Texas Instruments Incorporated

Last updated 10/2025