CDx4HC(T)259 High-Speed SMOS Logic 8-Bit Addressable Latch

1 Features

- Buffered inputs and outputs
- Four operating modes
- Typical propagation delay of 15ns at V_{CC} = 5V, C_L = 15pF, T_A = 25ºC
- Fanout (over temperature range)
  - Standard Outputs: 10 LSTTL loads
  - Bus driver outputs: 15 LSTTL loads
- Wide operating temperature range: -55ºC to 125ºC
- Balanced propagation delay and transition times
- Significant power reduction compared to LSTTL logic ICs
- HC types
  - 2 V to 6 V operation
  - High noise immunity: N_{IL} = 30%, N_{IH} = 30% of V_{CC} at V_{CC} = 5 V
- HCT types
  - 4.5 V to 5.5 V operation
  - Direct LSTTL input logic compatability, V_{IL} = 0.8 V (max), V_{IH} = 2 V (min)
  - CMOS input compatibility, $I_I \leq 1\mu A$ at V_{OL}, V_{OH}

2 Description

The CDx4HC(T)259 is an 8-bit addressable latch with three active modes of operation (addressable latch, memory, 8-line demultiplexer) and one reset mode.

Device Information

PART NUMBER	PACKAGE(1)	BODY SIZE (NOM)
CD54HC259F3A	CDIP (16)	21.34 mm × 6.92 mm
CD54HCT259F3A	CDIP (16)	21.34 mm × 6.92 mm
CD74HC259E	PDIP (16)	19.31 mm × 6.35 mm
CD74HCT259E	PDIP (16)	19.31 mm × 6.35 mm
CD74HC259M	SOIC (16)	9.90 mm × 3.90 mm
CD74HCT259M	SOIC (16)	9.90 mm × 3.90 mm

(1) For all packages see the orderable addendum at the end of the data sheet.

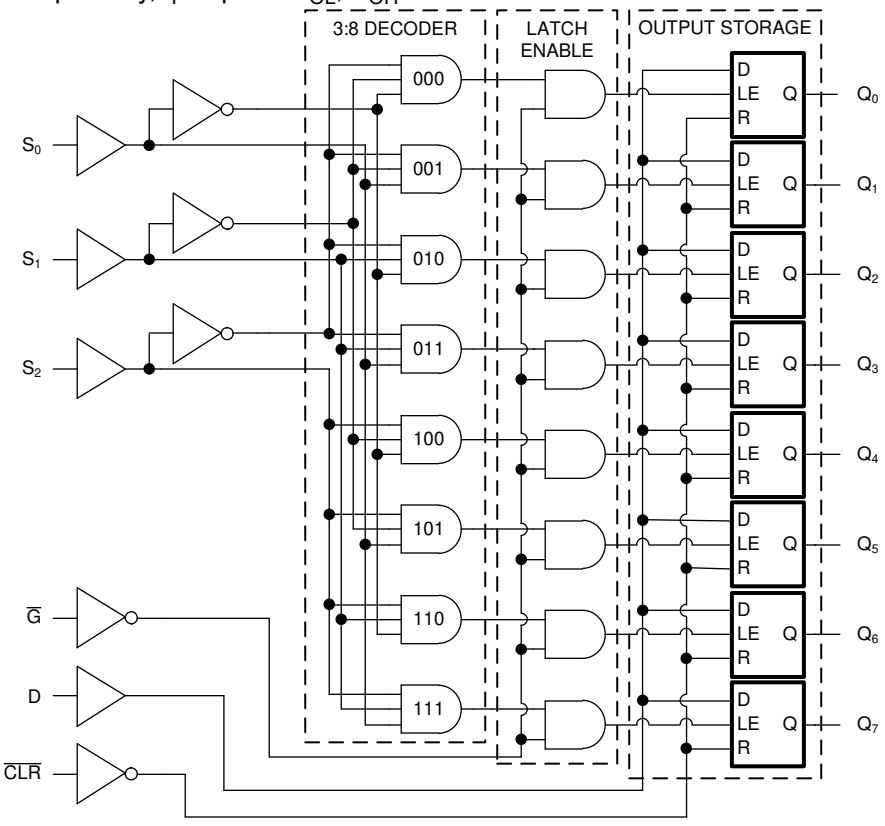

Functional Block Diagram

An IMPORTANT NOTICE at the end of this data sheet addresses availability, warranty, changes, use in safety-critical applications, intellectual property matters and other important disclaimers. PRODUCTION DATA.

Table of Contents

1 Features....1
2 Description....1
3 Revision History....2
4 Pin Configuration and Functions....3
5 Specifications....4
5.1 Absolute Maximum Ratings....4
5.2 Recommended Operating Conditions....4
5.3 Thermal Information....4
5.4 Electrical Characteristics....5
5.5 Prerequisite for Switching Characteristics....6
5.6 Switching Characteristics[(2)]....7
6 Parameter Measurement Information....8
7 Detailed Description....10
7.1 Overview....10
7.2 Functional Block Diagram....10
7.3 Device Functional Modes....11
8 Power Supply Recommendations....12
9 Layout....12
9.1 Layout Guidelines....12
10 Device and Documentation Support....13
10.1 Documentation Support....13
10.2 Receiving Notification of Documentation Updates....13
10.3 Support Resources....13
10.4 Trademarks....13
10.5 Electrostatic Discharge Caution....13
10.6 Glossary....13
11 Mechanical, Packaging, and Orderable Information....13

3 Revision History

NOTE: Page numbers for previous revisions may differ from page numbers in the current version.

Changes from Revision C (October 2003) to Revision D (November 2021)	Page
• Updated the numbering, formatting, tables, figures, and cross-references throughout the document to reflect modern datasheet standards	1
• Updated pin names to match current TI naming conventions. A_0 is now S_0, A_1 is now S_1, A_2 is now S_2	3

Copyright © 2021 Texas Instruments Incorporated

4 Pin Configuration and Functions

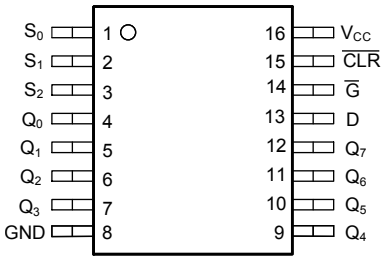

J, D or PW Package
16-Pin CDIP, SOIC or TSSOP
Top View

5 Specifications

5.1 Absolute Maximum Ratings

Over operating free-air temperature range (unless otherwise noted)(1)

			MIN	MAX	UNIT
V_{CC}	Supply voltage		-0.5	7	V
I_{IK}	Input clamp diode current	For $V_I < -0.5V$ or $V_I > V_{CC} + 0.5V$		±20	mA
I_{OK}	Output clamp diode current	For $V_O < -0.5V$ or $V_O > V_{CC} + 0.5V$		±20	mA
I_O	Drain current, per output	For $-0.5V < V_O < V_{CC} + 0.5V$		±25	mA
I_O	Output source or sink current per output pin	For $V_O > -0.5V$ or $V_O < V_{CC} + 0.5V$		±25	mA
	Continuous current through V_{CC} or GND			±50	mA
T_J	Junction temperature			150	°C
T_{stg}	Storage temperature		-65	150	°C
	Lead temperature (Soldering 10s) (SOIC - lead tips only)			300	°C

(1) Stresses beyond those listed under *absolute maximum ratings* may cause permanent damage to the device. These are stress ratings only and functional operation of the device at these or any other conditions beyond those indicated under *recommended operating conditions* is not implied. Exposure to absolute-maximum-rated conditions for extended periods may affect device reliability.

5.2 Recommended Operating Conditions

			MIN	MAX	UNIT
V_{CC}	Supply voltage range	HC Types	2	6	V
		HCT Types	4.5	5.5	
V_I	Input voltage		0	V_{CC}	V
V_O	Output voltage		0	V_{CC}	V
t_t	Input rise and fall time	V_{CC} = 2V		1000	ns
		V_{CC} = 4.5V		500	
		V_{CC} = 6V		400	
T_A	Temperature range		-55	125	°C

5.3 Thermal Information

THERMAL METRIC		CD74HC259, CD74HCT259		UNIT
		N (PDIP)	D (SOIC)	
		16 PINS	16 PINS	
$R_{\theta JA}$	Junction-to-ambient thermal resistance(1)	67	73	°C/W

(1) For more information about traditional and new thermal metrics, see the Semiconductor and IC Package Thermal Metrics application report.

Copyright © 2021 Texas Instruments Incorporated

5.4 Electrical Characteristics

PARAMETER		TEST CONDITIONS	V_{CC} (V)	25°C			-40°C to 85°C		-55°C to 125°C		UNIT
				MIN	TYP	MAX	MIN	MAX	MIN	MAX	
HC TYPES											
V_{IH}	High-level input voltage		2	1.5			1.5		1.5		V
			4.5	3.15			3.15		3.15		V
			6	4.2			4.2		4.2		V
V_{IL}	Low-level input voltage		2			0.5		0.5		0.5	V
			4.5			1.35		1.35		1.35	V
			6			1.8		1.8		1.8	V
V_{OH}	High-level output voltage	I_{OH} = – 20 µA	2	1.9			1.9		1.9		V
		I_{OH} = – 20 µA	4.5	4.4			4.4		4.4		V
		I_{OH} = – 20 µA	6	5.9			5.9		5.9		V
	High-level output voltage	I_{OH}= – 4 mA	4.5	3.98			3.84		3.7		V
		I_{OH} = – 5.2 mA	6	5.48			5.34		5.2		V
V_{OL}	Low-level output voltage	I_{OL} = 20 µA	2			0.1		0.1		0.1	V
		I_{OL} = 20 µA	4.5			0.1		0.1		0.1	V
		I_{OL} = 20 µA	6			0.1		0.1		0.1	V
	Low-level output voltage	I_{OL}= 4 mA	4.5			0.26		0.33		0.4	V
		I_{OL} = 5.2 mA	6			0.26		0.33		0.4	V
I_I	Input leakage current	V_I = V_{CC} or GND	6			±0.1		±1		±1	µA
I_{CC}	Supply current	V_I = V_{CC} or GND	6			8		80		160	µA
HCT TYPES											
V_{IH}	High-level input voltage		4.5 to 5.5	2			2		2		V
V_{IL}	Low-level input voltage		4.5 to 5.5			0.8		0.8		0.8	V
V_{OH}	High-level output voltage	V_{OH} = – 20 µA	4.5	4.4			4.4		4.4		V
	HIgh-level output voltage	V_{OH} = – 4 mA	4.5	3.98			3.84		3.7		V
V_{OL}	Low-level output voltage	V_{OL} = 20 µA	4.5			0.1		0.1		0.1	V
	Low-level output voltage	V_{OL} = 4 mA	4.5			0.26		0.33		0.4	V
I_I	Input leakage current	V_I = V_{CC} or GND	5.5			±0.1		±1		±1	µA
I_{CC}	Supply current	V_I = V_{CC} or GND	5.5			8		80		160	µA
ΔI_{CC}(1)	Additional supply current per input pin	One of A0 - A2 and $\overline{LE}$ inputs held at V_{CC} – 2.1	4.5 to 5.5		100	540		675		735	µA
		D input held at V_{CC} – 2.1	4.5 to 5.5		100	432		540		588	
		$\overline{MR}$ input held at V_{CC} – 2.1	4.5 to 5.5		100	270		337.5		367.5	

(1) V_I = V_{IH} or V_{IL}, unless otherwise noted.

Copyright © 2021 Texas Instruments Incorporated

5.5 Prerequisite for Switching Characteristics

PARAMETER		V_{CC} (V)	25°C			-40°C to 85°C			-55°C to 125°C			UNIT
			MIN	TYP	MAX	MIN	TYP	MAX	MIN	TYP	MAX	
HC TYPES												
t_{WL}	Pulse Width $\overline{G}$	2	70			90			105			ns
		4.5	14			18			21			
		5	12			15			18			
t_{WL}	$\overline{CLR}$	2	70			90			105			ns
		4.5	14			18			21			
		6	12			15			18			
t_{SU}	Setup time D to $\overline{G}$ S to $\overline{G}$	2	80			100			120			ns
		4.5	16			20			24			
		6	14			17			20			
t_H	Hold time D to $\overline{G}$ S to $\overline{G}$	2	0			0			0			ns
		4.5	0			0			0			
		6	0			0			0			
HCT TYPES												
t_{WL}	Pulse width $\overline{G}$ $\overline{CLR}$	4.5	18			23			27			ns
t_{SU}	Setup Time D to $\overline{G}$ S to $\overline{G}$	4.5	17			21			26			ns
t_H	Hold Time D to $\overline{G}$ S to $\overline{G}$	4.5	0			0			0			pF

Copyright © 2021 Texas Instruments Incorporated

5.6 Switching Characteristics[2]

C_L = 50pF, Input t_t = 6ns

PARAMETER		V_{CC} (V)	25°C			-40°C to 85°C		-55°C to 125°C		UNIT
			MIN	TYP	MAX	MIN	MAX	MIN	MAX	
HC TYPES										
t_{pd}	D to Q	2			185		230		280	ns
		4.5		15[1]	37		46		56	
		6			31		39		48	
	$\overline{G}$ to Q	2			170		215		255	ns
		4.5		14[1]	34		43		51	
		6			29		37		43	
	S to Q	2			185		230		280	ns
		4.5		15[1]	37		46		56	
		6			31		39		48	
	$\overline{CLR}$ to Q	2			155		195		235	ns
		4.5		13[1]	31		39		47	
		6			26		33		40	
t_t	Output transition time	2			75		95		110	ns
		4.5			15		19		22	
		6			13		16		19	
C_{pd}	Power dissipation Capacitance[1]	5		21[1]						pF
C_i	Input capacitance		10		10	10		10		pF
HCT TYPES										
t_{pd}	D to Q	4.5		16[1]	39		49		59	ns
	$\overline{G}$ to Q	4.5		16[1]	38		48		57	ns
	S to Q	4.5		17[1]	41		51		61	ns
	$\overline{CLR}$ to Q	4.5		16[1]	39		49		59	pF
C_{pd}	Power dissipaction Capacitance[1]	5		22[1]						pF
C_i	Input Capacitance		10		10	10		10		pF
t_t	Output transition time	4.5			15		19		22	ns

(1) C_L = 15pF and V_{CC} = 5 V.
(2) For details on CMOS power calculation see, SCAA053B.

Copyright © 2021 Texas Instruments Incorporated

6 Parameter Measurement Information

Phase relationships between waveforms were chosen arbitrarily. All input pulses are supplied by generators having the following characteristics: PRR ≤ 1 MHz, Z_O = 50 Ω, t_t < 6 ns.

For clock inputs, f_{max} is measured when the input duty cycle is 50%.

The outputs are measured one at a time with one input transition per measurement.

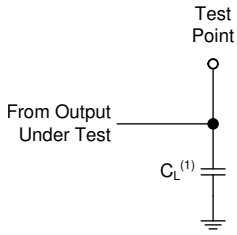

(1) C_L includes probe and test-fixture capacitance.

Figure 6-1. Load Circuit for Push-Pull Outputs

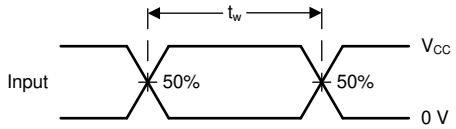

Figure 6-2. Voltage Waveforms, Standard CMOS Inputs Pulse Duration

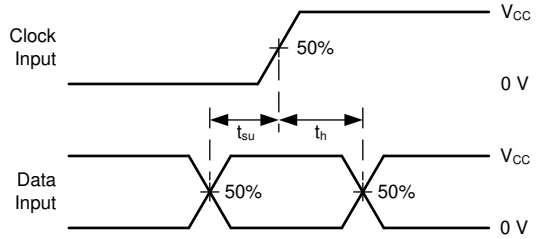

Figure 6-3. Voltage Waveforms, Standard CMOS Inputs Setup and Hold Times

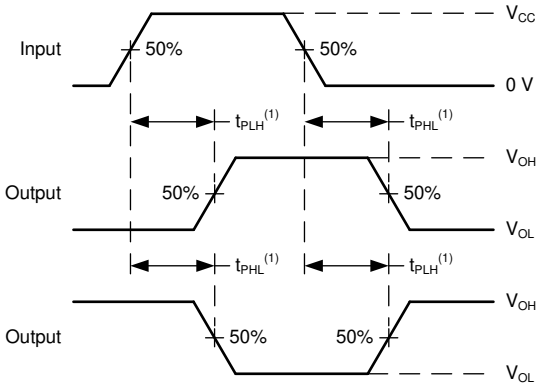

(1) The greater between t_{PLH} and t_{PHL} is the same as t_{pd}.

Figure 6-4. Voltage Waveforms, Standard CMOS Inputs Setup Propagation Delays

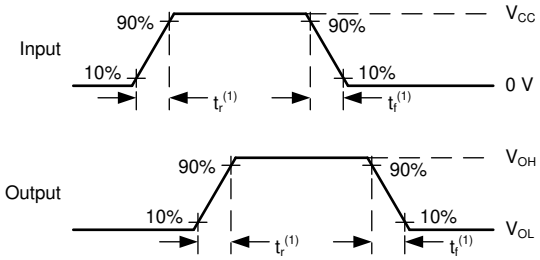

(1) The greater between t_r and t_f is the same as t_t.

Figure 6-5. Voltage Waveforms, Input and Output Transition Times for Standard CMOS Input Devices

Copyright © 2021 Texas Instruments Incorporated

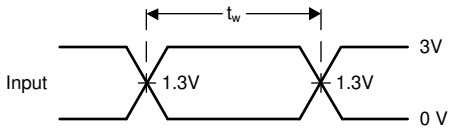

Figure 6-6. Voltage Waveforms, TTL-Compatible CMOS Inputs Pulse Duration

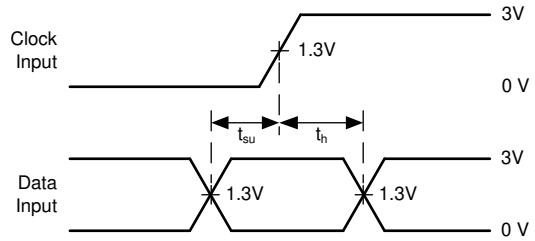

Figure 6-7. Voltage Waveforms, TTL-Compatible CMOS Inputs Setup and Hold Times

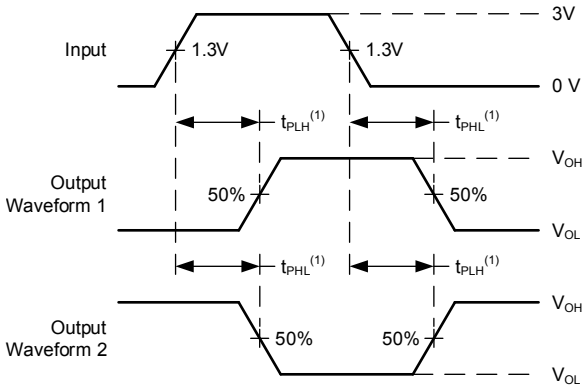

(1) The greater between t_{PLH} and t_{PHL} is the same as t_{pd}.

Figure 6-8. Voltage Waveforms, TTL-Compatible CMOS Inputs Propagation Delays

7 Detailed Description

7.1 Overview

The CDx4HC(T)259 8-bit addressable latches are designed for general-purpose storage applications in digital systems. Specific uses include working registers, serial-holding registers, and active-high decoders or demultiplexers. They are multifunctional devices capable of storing single-line data in eight addressable latches and being a 1-of-8 decoder or demultiplexer with active-high outputs.

Four distinct modes of operation are selectable by controlling the clear ($\overline{CLR}$) and enable ($\overline{G}$) inputs:

- Addressable-latch mode: $\overline{CLR}$ = HIGH; $\overline{G}$ = LOW
  - Data at the data-in terminal is written into the addressed latch
  - The addressed latch follows the data input, with all unaddressed latches remaining in their previous states
- Memory mode: $\overline{CLR}$ = HIGH; $\overline{G}$ = HIGH
  - All latches remain in their previous states and are unaffected by the data or address inputs
  - To eliminate the possibility of entering erroneous data in the latches, $\overline{G}$ should be held high (inactive) while the address lines are changing
- 1-of-8 decoding or demultiplexing mode: $\overline{CLR}$ = LOW; $\overline{G}$ = LOW
  - The addressed output follows the level of the D input with all other outputs low
- Clear mode: $\overline{CLR}$ = LOW; $\overline{G}$ = HIGH
  - All outputs are low and unaffected by the address and data inputs

7.2 Functional Block Diagram

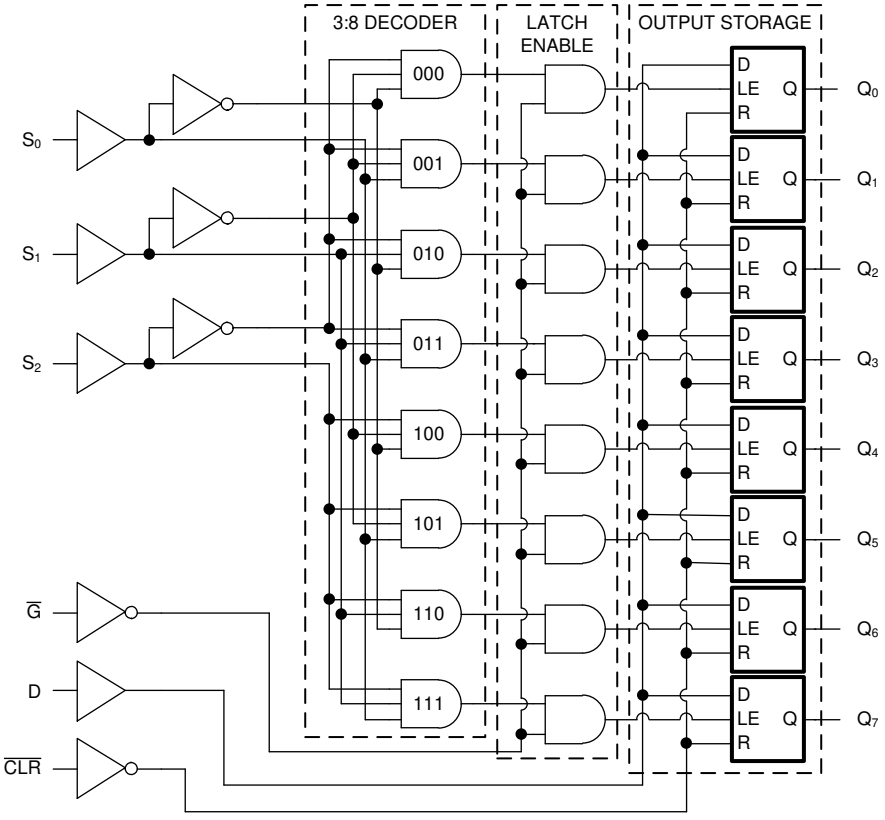

Copyright © 2021 Texas Instruments Incorporated

7.3 Device Functional Modes

The Function Tableand Latch Selection Table below list the functional modes of the CDx4HC(T)259.

Table 7-1. Function Table

INPUTS(1)		OUTPUT OF ADDRESSED LATCH(2)	EACH OTHER OUTPUT(2)	FUNCTION
$\overline{CLR}$	$\overline{G}$			
H	L	D	Q_{iO}	Addressable latch
H	H	Q_{iO}	Q_{iO}	Memory
L	L	D	L	8-line demultiplexer
L	H	L	L	Clear

(1) H = High voltage level, L = Low voltage level
(2) Q_{iO} = Previous output state of selected latch, D = Data input logic value

Table 7-2. Latch Selection Table

SELECT INPUTS(1)			LATCH ADDRESSED
S2	S1	S0	
L	L	L	0
L	L	H	1
L	H	L	2
L	H	H	3
H	L	L	4
H	L	H	5
H	H	L	6
H	H	H	7

(1) H = High Voltage Level, L = Low Voltage Level

Copyright © 2021 Texas Instruments Incorporated

8 Power Supply Recommendations

The power supply can be any voltage between the minimum and maximum supply voltage rating located in the *Recommended Operating Conditions*. Each V_{CC} terminal should have a good bypass capacitor to prevent power disturbance. A 0.1-µF capacitor is recommended for this device. It is acceptable to parallel multiple bypass caps to reject different frequencies of noise. The 0.1-µF and 1-µF capacitors are commonly used in parallel. The bypass capacitor should be installed as close to the power terminal as possible for best results.

9 Layout

9.1 Layout Guidelines

When using multiple-input and multiple-channel logic devices inputs must not ever be left floating. In many cases, functions or parts of functions of digital logic devices are unused; for example, when only two inputs of a triple-input AND gate are used or only 3 of the 4 buffer gates are used. Such unused input pins must not be left unconnected because the undefined voltages at the outside connections result in undefined operational states. All unused inputs of digital logic devices must be connected to a logic high or logic low voltage, as defined by the input voltage specifications, to prevent them from floating. The logic level that must be applied to any particular unused input depends on the function of the device. Generally, the inputs are tied to GND or V_{CC}, whichever makes more sense for the logic function or is more convenient.

Copyright © 2021 Texas Instruments Incorporated

10 Device and Documentation Support

TI offers an extensive line of development tools. Tools and software to evaluate the performance of the device, generate code, and develop solutions are listed below.

10.1 Documentation Support

10.1.1 Related Documentation

10.2 Receiving Notification of Documentation Updates

To receive notification of documentation updates, navigate to the device product folder on ti.com. Click on *Subscribe to updates* to register and receive a weekly digest of any product information that has changed. For change details, review the revision history included in any revised document.

10.3 Support Resources

TI E2E™ support forums are an engineer's go-to source for fast, verified answers and design help — straight from the experts. Search existing answers or ask your own question to get the quick design help you need.

Linked content is provided "AS IS" by the respective contributors. They do not constitute TI specifications and do not necessarily reflect TI's views; see TI's Terms of Use.

10.4 Trademarks

TI E2E™ is a trademark of Texas Instruments.
All trademarks are the property of their respective owners.

10.5 Electrostatic Discharge Caution



This integrated circuit can be damaged by ESD. Texas Instruments recommends that all integrated circuits be handled with appropriate precautions. Failure to observe proper handling and installation procedures can cause damage.

ESD damage can range from subtle performance degradation to complete device failure. Precision integrated circuits may be more susceptible to damage because very small parametric changes could cause the device not to meet its published specifications.

10.6 Glossary

TI Glossary	This glossary lists and explains terms, acronyms, and definitions.

11 Mechanical, Packaging, and Orderable Information

The following pages include mechanical, packaging, and orderable information. This information is the most current data available for the designated devices. This data is subject to change without notice and revision of this document. For browser-based versions of this data sheet, refer to the left-hand navigation.

Copyright © 2021 Texas Instruments Incorporated

PACKAGING INFORMATION

Orderable part number	Status (1)	Material type (2)	Package | Pins	Package qty | Carrier	RoHS (3)	Lead finish/ Ball material (4)	MSL rating/ Peak reflow (5)	Op temp (°C)	Part marking (6)
5962-8985201EA	Active	Production	CDIP (J) | 16	25 | TUBE	No	SNPB	N/A for Pkg Type	-55 to 125	5962-8985201EA CD54HCT259F3A
CD54HC259F3A	Active	Production	CDIP (J) | 16	25 | TUBE	No	SNPB	N/A for Pkg Type	-55 to 125	8551901EA CD54HC259F3A
CD54HC259F3A.A	Active	Production	CDIP (J) | 16	25 | TUBE	No	SNPB	N/A for Pkg Type	-55 to 125	8551901EA CD54HC259F3A
CD54HCT259F3A	Active	Production	CDIP (J) | 16	25 | TUBE	No	SNPB	N/A for Pkg Type	-55 to 125	5962-8985201EA CD54HCT259F3A
CD54HCT259F3A.A	Active	Production	CDIP (J) | 16	25 | TUBE	No	SNPB	N/A for Pkg Type	-55 to 125	5962-8985201EA CD54HCT259F3A
CD74HC259E	Active	Production	PDIP (N) | 16	25 | TUBE	Yes	NIPDAU	N/A for Pkg Type	-55 to 125	CD74HC259E
CD74HC259E.A	Active	Production	PDIP (N) | 16	25 | TUBE	Yes	NIPDAU	N/A for Pkg Type	-55 to 125	CD74HC259E
CD74HC259M	Obsolete	Production	SOIC (D) | 16	-	-	Call TI	Call TI	-55 to 125	HC259M
CD74HC259M96	Active	Production	SOIC (D) | 16	2500 | LARGE T&R	Yes	NIPDAU | SN	Level-1-260C-UNLIM	-55 to 125	HC259M
CD74HC259M96.A	Active	Production	SOIC (D) | 16	2500 | LARGE T&R	Yes	NIPDAU	Level-1-260C-UNLIM	-55 to 125	HC259M
CD74HC259M96G4	Active	Production	SOIC (D) | 16	2500 | LARGE T&R	Yes	NIPDAU	Level-1-260C-UNLIM	-55 to 125	HC259M
CD74HC259M96G4.A	Active	Production	SOIC (D) | 16	2500 | LARGE T&R	Yes	NIPDAU	Level-1-260C-UNLIM	-55 to 125	HC259M
CD74HC259MT	Obsolete	Production	SOIC (D) | 16	-	-	Call TI	Call TI	-55 to 125	HC259M
CD74HCT259E	Active	Production	PDIP (N) | 16	25 | TUBE	Yes	NIPDAU	N/A for Pkg Type	-55 to 125	CD74HCT259E
CD74HCT259E.A	Active	Production	PDIP (N) | 16	25 | TUBE	Yes	NIPDAU	N/A for Pkg Type	-55 to 125	CD74HCT259E
CD74HCT259EE4	Active	Production	PDIP (N) | 16	25 | TUBE	Yes	NIPDAU	N/A for Pkg Type	-55 to 125	CD74HCT259E
CD74HCT259M	Obsolete	Production	SOIC (D) | 16	-	-	Call TI	Call TI	-55 to 125	HCT259M
CD74HCT259M96	Active	Production	SOIC (D) | 16	2500 | LARGE T&R	Yes	NIPDAU | SN	Level-1-260C-UNLIM	-55 to 125	HCT259M
CD74HCT259M96.A	Active	Production	SOIC (D) | 16	2500 | LARGE T&R	Yes	NIPDAU	Level-1-260C-UNLIM	-55 to 125	HCT259M
CD74HCT259M96G4	Active	Production	SOIC (D) | 16	2500 | LARGE T&R	Yes	NIPDAU	Level-1-260C-UNLIM	-55 to 125	HCT259M
CD74HCT259M96G4.A	Active	Production	SOIC (D) | 16	2500 | LARGE T&R	Yes	NIPDAU	Level-1-260C-UNLIM	-55 to 125	HCT259M
CD74HCT259MT	Obsolete	Production	SOIC (D) | 16	-	-	Call TI	Call TI	-55 to 125	HCT259M

(1) **Status:** For more details on status, see our product life cycle.

(2) **Material type:** When designated, preproduction parts are prototypes/experimental devices, and are not yet approved or released for full production. Testing and final process, including without limitation quality assurance, reliability performance testing, and/or process qualification, may not yet be complete, and this item is subject to further changes or possible discontinuation. If available for ordering, purchases will be subject to an additional waiver at checkout, and are intended for early internal evaluation purposes only. These items are sold without warranties of any kind.

(3) **RoHS values:** Yes, No, RoHS Exempt. See the TI RoHS Statement for additional information and value definition.

(4) **Lead finish/Ball material:** Parts may have multiple material finish options. Finish options are separated by a vertical ruled line. Lead finish/Ball material values may wrap to two lines if the finish value exceeds the maximum column width.

(5) **MSL rating/Peak reflow:** The moisture sensitivity level ratings and peak solder (reflow) temperatures. In the event that a part has multiple moisture sensitivity ratings, only the lowest level per JEDEC standards is shown. Refer to the shipping label for the actual reflow temperature that will be used to mount the part to the printed circuit board.

(6) **Part marking:** There may be an additional marking, which relates to the logo, the lot trace code information, or the environmental category of the part.

Multiple part markings will be inside parentheses. Only one part marking contained in parentheses and separated by a "~" will appear on a part. If a line is indented then it is a continuation of the previous line and the two combined represent the entire part marking for that device.

Important Information and Disclaimer: The information provided on this page represents TI's knowledge and belief as of the date that it is provided. TI bases its knowledge and belief on information provided by third parties, and makes no representation or warranty as to the accuracy of such information. Efforts are underway to better integrate information from third parties. TI has taken and continues to take reasonable steps to provide representative and accurate information but may not have conducted destructive testing or chemical analysis on incoming materials and chemicals. TI and TI suppliers consider certain information to be proprietary, and thus CAS numbers and other limited information may not be available for release.

In no event shall TI's liability arising out of such information exceed the total purchase price of the TI part(s) at issue in this document sold by TI to Customer on an annual basis.

OTHER QUALIFIED VERSIONS OF CD54HC259, CD54HCT259, CD74HC259, CD74HCT259 :

- Catalog : CD74HC259, CD74HCT259
- Military : CD54HC259, CD54HCT259

NOTE: Qualified Version Definitions:

- Catalog - TI's standard catalog product
- Military - QML certified for Military and Defense Applications

TAPE AND REEL INFORMATION

REEL DIMENSIONS

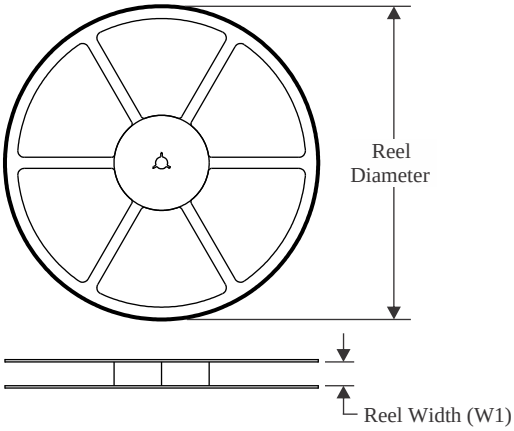

TAPE DIMENSIONS

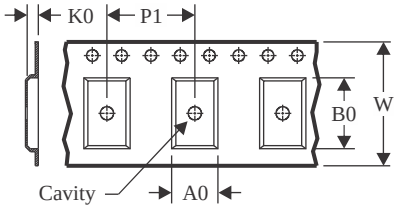

A0	Dimension designed to accommodate the component width
B0	Dimension designed to accommodate the component length
K0	Dimension designed to accommodate the component thickness
W	Overall width of the carrier tape
P1	Pitch between successive cavity centers

QUADRANT ASSIGNMENTS FOR PIN 1 ORIENTATION IN TAPE

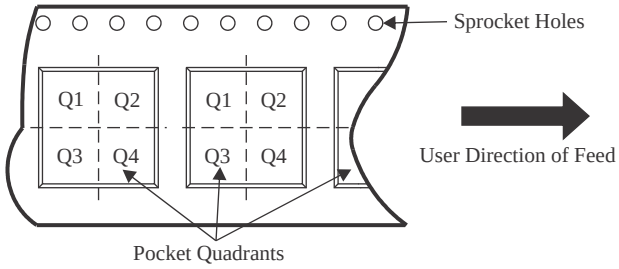

*All dimensions are nominal

Device	Package Type	Package Drawing	Pins	SPQ	Reel Diameter (mm)	Reel Width W1 (mm)	A0 (mm)	B0 (mm)	K0 (mm)	P1 (mm)	W (mm)	Pin1 Quadrant
CD74HC259M96	SOIC	D	16	2500	330.0	16.4	6.5	10.3	2.1	8.0	16.0	Q1
CD74HC259M96G4	SOIC	D	16	2500	330.0	16.4	6.5	10.3	2.1	8.0	16.0	Q1
CD74HCT259M96G4	SOIC	D	16	2500	330.0	16.4	6.5	10.3	2.1	8.0	16.0	Q1

TAPE AND REEL BOX DIMENSIONS

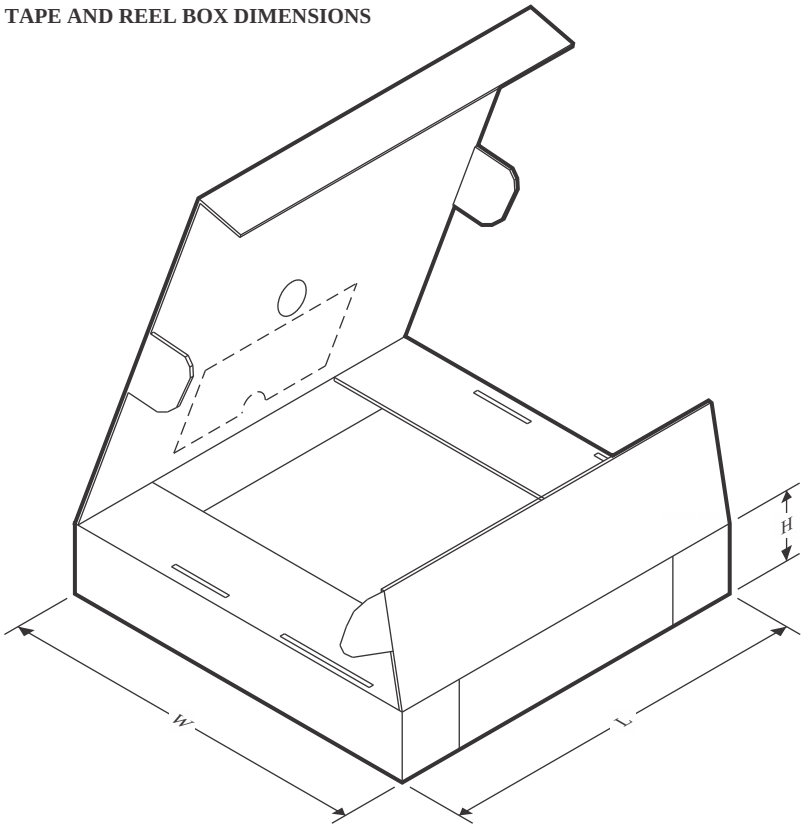

*All dimensions are nominal

Device	Package Type	Package Drawing	Pins	SPQ	Length (mm)	Width (mm)	Height (mm)
CD74HC259M96	SOIC	D	16	2500	340.5	336.1	32.0
CD74HC259M96G4	SOIC	D	16	2500	353.0	353.0	32.0
CD74HCT259M96G4	SOIC	D	16	2500	353.0	353.0	32.0

TUBE

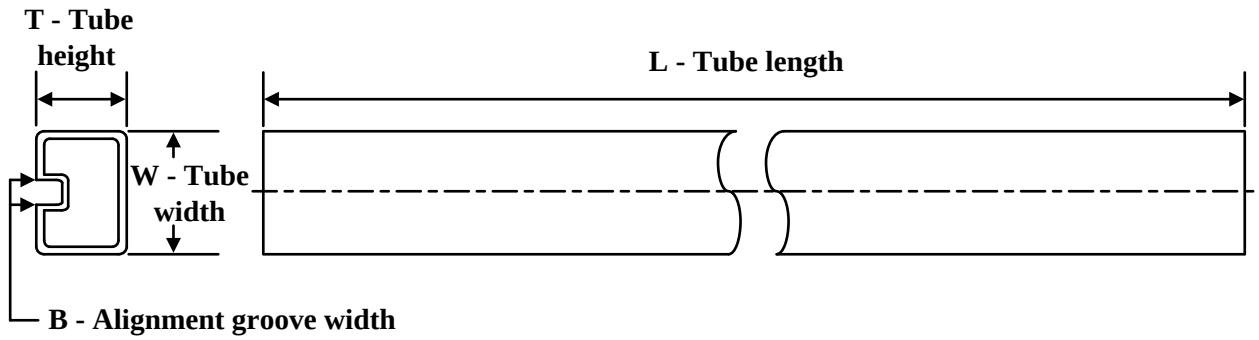

*All dimensions are nominal

Device	Package Name	Package Type	Pins	SPQ	L (mm)	W (mm)	T (µm)	B (mm)
CD74HC259E	N	PDIP	16	25	506	13.97	11230	4.32
CD74HC259E	N	PDIP	16	25	506	13.97	11230	4.32
CD74HC259E.A	N	PDIP	16	25	506	13.97	11230	4.32
CD74HC259E.A	N	PDIP	16	25	506	13.97	11230	4.32
CD74HCT259E	N	PDIP	16	25	506	13.97	11230	4.32
CD74HCT259E	N	PDIP	16	25	506	13.97	11230	4.32
CD74HCT259E.A	N	PDIP	16	25	506	13.97	11230	4.32
CD74HCT259E.A	N	PDIP	16	25	506	13.97	11230	4.32
CD74HCT259EE4	N	PDIP	16	25	506	13.97	11230	4.32
CD74HCT259EE4	N	PDIP	16	25	506	13.97	11230	4.32

D (R–PDSO–G16) PLASTIC SMALL OUTLINE

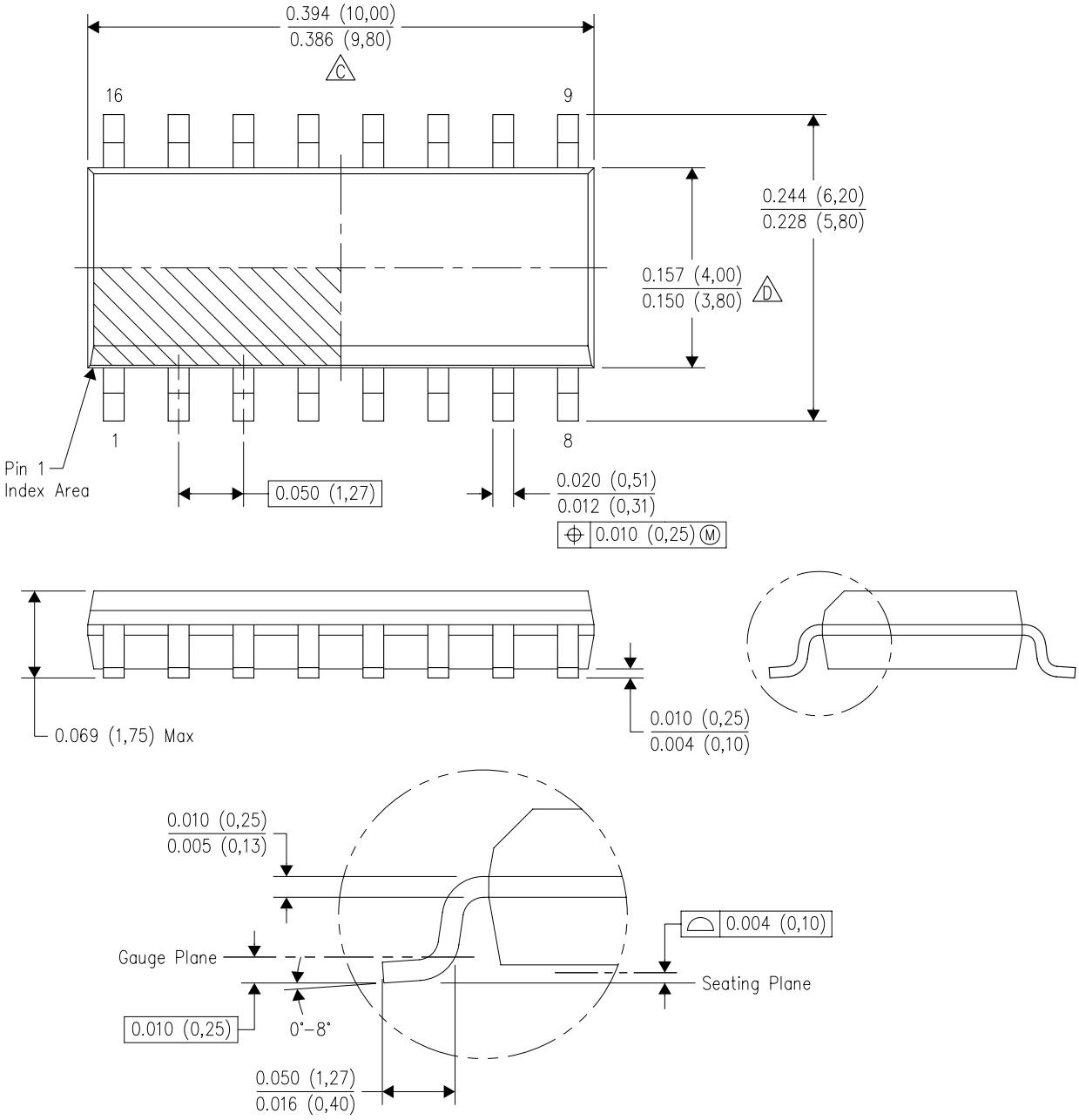

NOTES:
A. All linear dimensions are in inches (millimeters).
B. This drawing is subject to change without notice.
C. Body length does not include mold flash, protrusions, or gate burrs. Mold flash, protrusions, or gate burrs shall not exceed 0.006 (0,15) each side.
D. Body width does not include interlead flash. Interlead flash shall not exceed 0.017 (0,43) each side.
E. Reference JEDEC MS–012 variation AC.

J (R–GDIP–T**)

14 LEADS SHOWN

CERAMIC DUAL IN–LINE PACKAGE

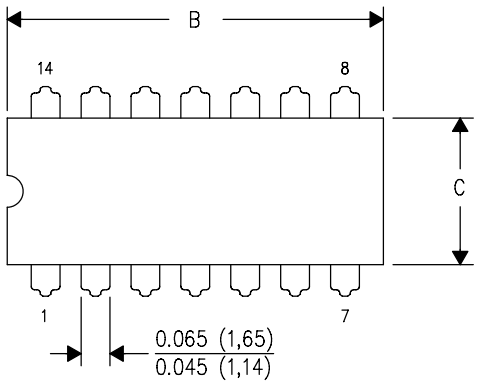

DIM \ PINS **	14	16	18	20
A	0.300 (7,62) BSC	0.300 (7,62) BSC	0.300 (7,62) BSC	0.300 (7,62) BSC
B MAX	0.785 (19,94)	.840 (21,34)	0.960 (24,38)	1.060 (26,92)
B MIN	—	—	—	—
C MAX	0.300 (7,62)	0.300 (7,62)	0.310 (7,87)	0.300 (7,62)
C MIN	0.245 (6,22)	0.245 (6,22)	0.220 (5,59)	0.245 (6,22)

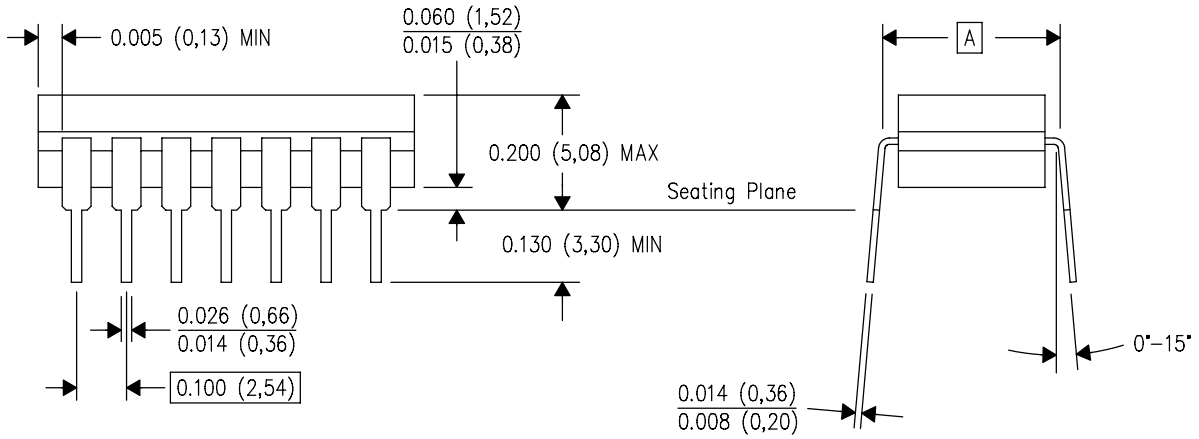

4040083/F 03/03

NOTES:
A. All linear dimensions are in inches (millimeters).
B. This drawing is subject to change without notice.
C. This package is hermetically sealed with a ceramic lid using glass frit.
D. Index point is provided on cap for terminal identification only on press ceramic glass frit seal only.
E. Falls within MIL STD 1835 GDIP1–T14, GDIP1–T16, GDIP1–T18 and GDIP1–T20.

N (R–PDIP–T**)

PLASTIC DUAL–IN–LINE PACKAGE

16 PINS SHOWN

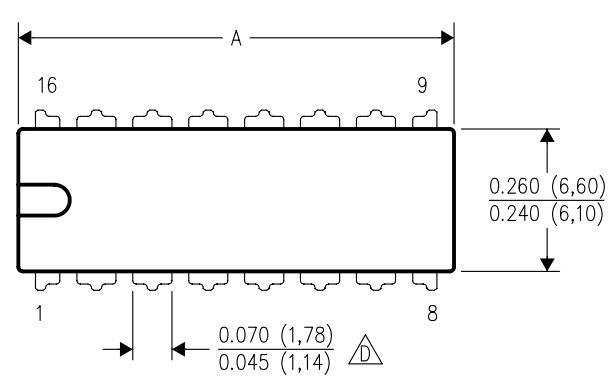

DIM \ PINS **	14	16	18	20
A MAX	0.775 (19,69)	0.775 (19,69)	0.920 (23,37)	1.060 (26,92)
A MIN	0.745 (18,92)	0.745 (18,92)	0.850 (21,59)	0.940 (23,88)
MS–001 VARIATION (C)	AA	BB	AC	AD

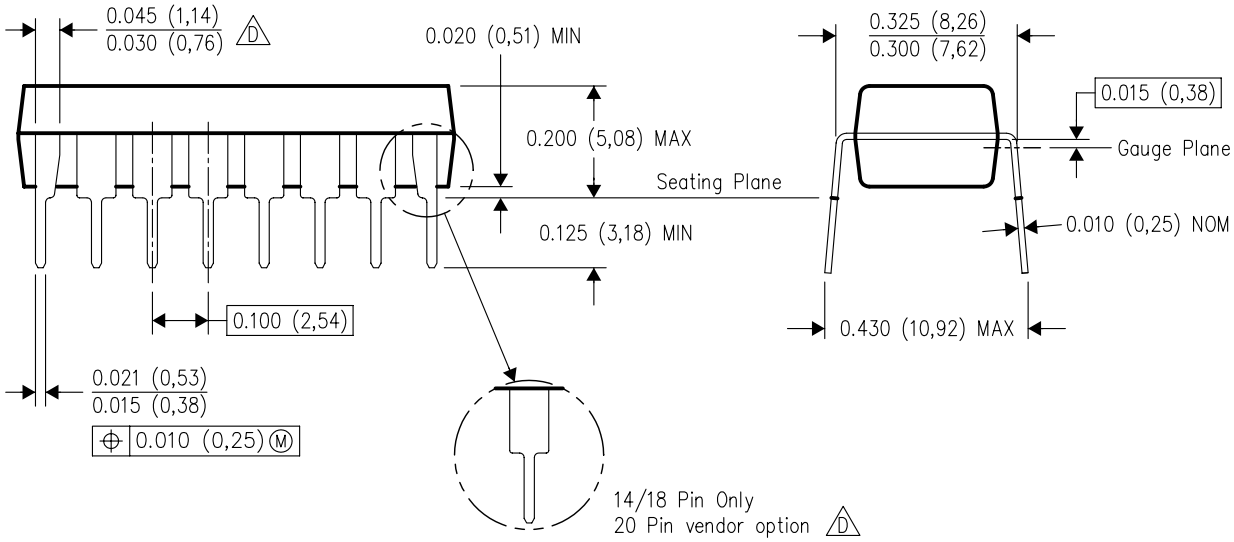

4040049/E 12/2002

NOTES:
A. All linear dimensions are in inches (millimeters).
B. This drawing is subject to change without notice.
C. Falls within JEDEC MS–001, except 18 and 20 pin minimum body length (Dim A).
D. The 20 pin end lead shoulder width is a vendor option, either half or full width.

IMPORTANT NOTICE AND DISCLAIMER

TI PROVIDES TECHNICAL AND RELIABILITY DATA (INCLUDING DATASHEETS), DESIGN RESOURCES (INCLUDING REFERENCE DESIGNS), APPLICATION OR OTHER DESIGN ADVICE, WEB TOOLS, SAFETY INFORMATION, AND OTHER RESOURCES “AS IS” AND WITH ALL FAULTS, AND DISCLAIMS ALL WARRANTIES, EXPRESS AND IMPLIED, INCLUDING WITHOUT LIMITATION ANY IMPLIED WARRANTIES OF MERCHANTABILITY, FITNESS FOR A PARTICULAR PURPOSE OR NON-INFRINGEMENT OF THIRD PARTY INTELLECTUAL PROPERTY RIGHTS.

These resources are intended for skilled developers designing with TI products. You are solely responsible for (1) selecting the appropriate TI products for your application, (2) designing, validating and testing your application, and (3) ensuring your application meets applicable standards, and any other safety, security, regulatory or other requirements.

These resources are subject to change without notice. TI grants you permission to use these resources only for development of an application that uses the TI products described in the resource. Other reproduction and display of these resources is prohibited. No license is granted to any other TI intellectual property right or to any third party intellectual property right. TI disclaims responsibility for, and you fully indemnify TI and its representatives against any claims, damages, costs, losses, and liabilities arising out of your use of these resources.

TI’s products are provided subject to TI’s Terms of Sale, TI’s General Quality Guidelines, or other applicable terms available either on ti.com or provided in conjunction with such TI products. TI’s provision of these resources does not expand or otherwise alter TI’s applicable warranties or warranty disclaimers for TI products. Unless TI explicitly designates a product as custom or customer-specified, TI products are standard, catalog, general purpose devices.

TI objects to and rejects any additional or different terms you may propose.

Copyright © 2026, Texas Instruments Incorporated

Last updated 10/2025