CDCLVP2106 12-LVPECL Output, High-Performance Clock Buffer

1 Features

- Dual 1:6 Differential Buffer
- Two Clock Inputs
- Universal Inputs Can Accept LVPECL, LVDS, LVCMOS/LVTTL
- 12 LVPECL Outputs
- Maximum Clock Frequency: 2 GHz
- Maximum Core Current Consumption: 92 mA
- Very Low Additive Jitter: <100 fs, RMS in 10-kHz to 20-MHz Offset Range
- 2.375-V to 3.6-V Device Power Supply
- Maximum Propagation Delay: 550 ps
- Maximum Within Bank Output Skew: 20 ps
- LVPECL Reference Voltage, V_{AC_REF}, Available for Capacitive-Coupled Inputs
- Industrial Temperature Range: –40°C to +85°C
- Supports 105°C PCB Temperature (Measured with a Thermal Pad)
- Available in 6-mm × 6-mm, 40-Pin VQFN (RHA) Package
- ESD Protection Exceeds 2000 V (HBM)

2 Applications

- Wireless Communications
- Telecommunications/Networking
- Medical Imaging
- Test and Measurement Equipment

3 Description

The CDCLVP2106 is a highly versatile, low additive jitter buffer that can generate 12 copies of LVPECL clock outputs from two LVPECL, LVDS, or LVCMOS inputs for a variety of communication applications. It has a maximum clock frequency up to 2 GHz. Each buffer block consists of one input that feeds two LVPECL outputs. The overall additive jitter performance is less than 0.1 ps, RMS from 10 kHz to 20 MHz, and overall output skew is as low as 20 ps, making the device a perfect choice for use in demanding applications.

The CDCLVP2106 clock buffer distributes two clock inputs (IN0, IN1) to 12 pairs of differential LVPECL clock outputs (OUT0, OUT11) with minimum skew for clock distribution. Each buffer block consists of one input that feeds two LVPECL clock outputs. The inputs can be LVPECL, LVDS, or LVCMOS/LVTTL.

The CDCLVP2106 is specifically designed for driving 50-Ω transmission lines. When driving the inputs in single-ended mode, the LVPECL bias voltage (V_{AC_REF}) should be applied to the unused negative input pin. However, for high-speed performance up to 2 GHz, differential mode is strongly recommended.

The CDCLVP2106 is characterized for operation from –40°C to +85°C and is available in a 6-mm × 6-mm, VQFN-40 package.

Device Information(1)

PART NUMBER	PACKAGE	BODY SIZE (NOM)
CDCLVP2106	VQFN (40)	6.00 mm × 6.00 mm

(1) For all available packages, see the orderable addendum at the end of the data sheet.

Simplified Schematic

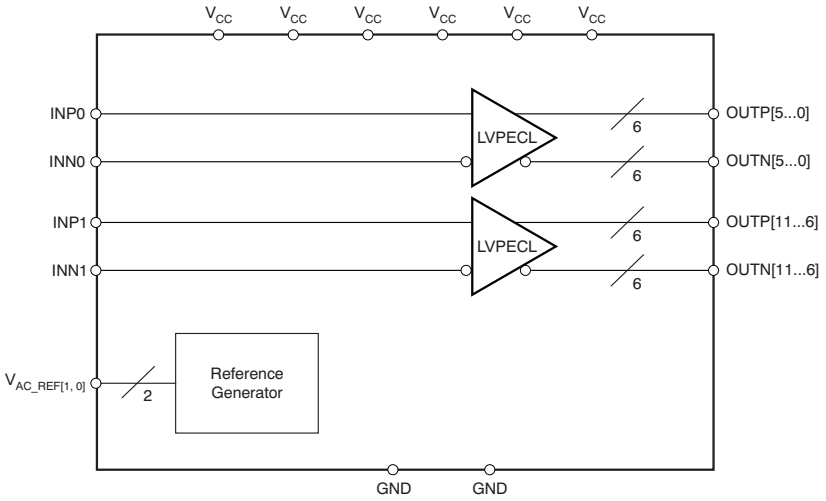

An IMPORTANT NOTICE at the end of this data sheet addresses availability, warranty, changes, use in safety-critical applications, intellectual property matters and other important disclaimers. PRODUCTION DATA.

Table of Contents

1 **Features** ... 1
2 **Applications** ... 1
3 **Description** ... 1
4 **Revision History** ... 2
5 **Pin Configuration and Functions** ... 4
6 **Specifications** ... 6
6.1 Absolute Maximum Ratings ... 6
6.2 ESD Ratings ... 6
6.3 Recommended Operating Conditions ... 6
6.4 Thermal Information ... 6
6.5 Electrical Characteristics: LVCMOS Input, at V_{CC} = 2.375 V to 3.6 V ... 7
6.6 Electrical Characteristics: Differential Input, at V_{CC} = 2.375 V to 3.6 V ... 7
6.7 Electrical Characteristics: LVPECL Output, at V_{CC} = 2.375 V to 2.625 V ... 7
6.8 Electrical Characteristics: LVPECL Output, at V_{CC} = 3 V to 3.6 V ... 8
6.9 Timing Requirements, at V_{CC} = 2.375 V to 2.625 V 8
6.10 Timing Requirements, at V_{CC} = 3 V to 3.6 V ... 9
6.11 Typical Characteristics ... 13
7 **Parameter Measurement Information** ... 13
7.1 Test Configurations ... 13
8 **Detailed Description** ... 16
8.1 Overview ... 16
8.2 Functional Block Diagram ... 16
8.3 Feature Description ... 16
8.4 Device Functional Modes ... 16
9 **Application and Implementation** ... 21
9.1 Application Information ... 21
9.2 Typical Application ... 21
10 **Power Supply Recommendations** ... 23
10.1 Power-Supply Filtering ... 23
11 **Layout** ... 24
11.1 Layout Guidelines ... 24
11.2 Layout Example ... 24
11.3 Thermal Considerations ... 24
12 **Device and Documentation Support** ... 25
12.1 Documentation Support ... 25
12.2 Community Resources ... 25
12.3 Trademarks ... 25
12.4 Electrostatic Discharge Caution ... 25
12.5 Glossary ... 25
13 **Mechanical, Packaging, and Orderable Information** ... 25

4 Revision History

NOTE: Page numbers for previous revisions may differ from page numbers in the current version.

Changes from Revision A (August 2011) to Revision B	Page
• Added *ESD Ratings* table, *Typical Characteristics* section, *Detailed Description* section, *Device Functional Modes* section, *Application and Implementation* section, *Power Supply Recommendations* section, *Layout* section, *Device and Documentation Support* section, and *Mechanical, Packaging, and Orderable Information* section	1
• Added support for 105ºC thermal pad temperature	1
• Deleted *Device Comparison* table; information in POA	1
• Changed order of *Pin Functions* table to alphabetical by pin name	4
• Added V_{OH} specification for T_{PCB}≤ 105ºC in *Electrical Characteristics: LVPECL Output, at V_{CC} = 2.375 V to 2.625 V*	7
• Added V_{OL} specification for T_{PCB}≤ 105ºC in *Electrical Characteristics: LVPECL Output, at V_{CC} = 2.375 V to 2.625 V*	7
• Added I_{EE} specification for T_{PCB}≤ 105ºC in *Electrical Characteristics: LVPECL Output, at V_{CC} = 2.375 V to 2.625 V*	7
• Added I_{CC} specification for T_{PCB}≤ 105ºC in *Electrical Characteristics: LVPECL Output, at V_{CC} = 2.375 V to 2.625 V*	7
• Added V_{OH} specification for T_{PCB}≤ 105ºC in *Electrical Characteristics: LVPECL Output, at V_{CC} = 3 V to 3.6 V*	8
• Added V_{OL} specification for T_{PCB}≤ 105ºC in *Electrical Characteristics: LVPECL Output, at V_{CC} = 3 V to 3.6 V*	8
• Added I_{EE} specification for T_{PCB}≤ 105ºC in *Electrical Characteristics: LVPECL Output, at V_{CC} = 3 V to 3.6 V*	8
• Added I_{CC} specification for T_{PCB}≤ 105ºC in *Electrical Characteristics: LVPECL Output, at V_{CC} = 3 V to 3.6 V*	8
• Added t_{RJIT} for f_{OUT} = 100 MHz, Input AC coupled, V_{ICM} = V_{AC_REF}, 12 kHz to 20 MHz	10
• Added t_{RJIT} for f_{OUT} = 122.88 MHz, Input AC coupled, V_{ICM} = V_{AC_REF}, 12 kHz to 20 MHz	10
• Added t_{RJIT} for f_{OUT} = 156.25 MHz, Input AC coupled, V_{ICM} = V_{AC_REF}, 12 kHz to 20 MHz	10
• Added t_{RJIT} for f_{OUT} = 312.5 MHz, Input AC coupled, V_{ICM} = V_{AC_REF}, 12 kHz to 20 MHz	10
• Added Footnote "100 MHz Wenzel oscillator, Input slew rate = 0.9 V/ns (single-ended)."	10

Copyright © 2009–2016, Texas Instruments Incorporated

Changes from Original (September 2009) to Revision A **Page**

- Revised descriptions of pins 7 and 4 5
- Corrected V_{IL} parameter description in *Electrical Characteristics* table for LVCMOS input 7
- Added footnote (2) to *Electrical Characteristics* table for LVPECL Output, V_{CC} = 2.375 V to 2.625 V 7
- Changed recommended resistor values in Figure 12(a) 17
- Changed recommended resistor values in Figure 16 19

5 Pin Configuration and Functions

RHA Package
40-Pin VQFN
Top View

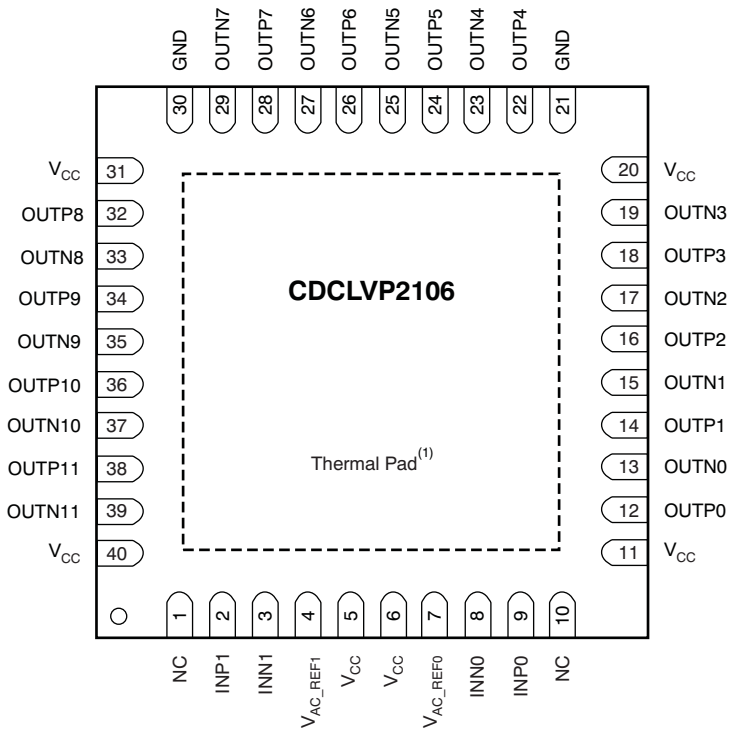

(1) Thermal pad must be soldered to ground.

Pin Functions

PIN		I/O	DESCRIPTION
NAME	NO.		
GND1, GND2	21, 30	Ground	Device grounds
INP0, INN0	9, 8	Input	Differential input pair or single-ended input no. 0
INP1, INN1	2, 3	Input	Differential input pair or single-ended input no. 1
OUTP0 OUTN0	12, 13	Output	Differential LVPECL output pair no. 0
OUTP1, OUTN1	14, 15	Output	Differential LVPECL output pair no. 1
OUTP2, OUTN2	16, 17	Output	Differential LVPECL output pair no. 2
OUTP3, OUTN3	18, 19	Output	Differential LVPECL output pair no. 3
OUTP4, OUTN4	22, 23	Output	Differential LVPECL output pair no. 4
OUTP5, OUTN5	24, 25	Output	Differential LVPECL output pair no. 5
OUTP6, OUTN6	26, 27	Output	Differential LVPECL output pair no. 6
OUTP7, OUTN7	28, 29	Output	Differential LVPECL output pair no. 7
OUTP8, OUTN8	32, 33	Output	Differential LVPECL output pair no. 8

Copyright © 2009–2016, Texas Instruments Incorporated

Pin Functions (continued)

PIN		I/O	DESCRIPTION
NAME	NO.		
OUTP9, OUTN9	34, 35	Output	Differential LVPECL output pair no. 9
OUTP10, OUTN10	36, 37	Output	Differential LVPECL output pair no. 10
OUTP11, OUTN11	38, 39	Output	Differential LVPECL output pair no. 11
V_{AC_REF0}	7	Output	Bias voltage output for capacitive coupled input pair no. 0. Do not use V_{AC_REF} at V_{CC} < 3 V. If used, TI recommends a 0.1-µF capacitor to GND on this pin. The output current is limited to 2 mA.
V_{AC_REF1}	4	Output	Bias voltage output for capacitive coupled input pair no. 1. Do not use V_{AC_REF} at V_{CC} < 3 V. If used, TI recommends using a 0.1-µF capacitor to GND on this pin. The output current is limited to 2 mA.
V_{CC}	5, 6, 11, 20, 31, 40	Power	2.5-V or 3.3-V supplies for the device
NC	1, 10	—	Do not connect

6 Specifications

6.1 Absolute Maximum Ratings

over operating free-air temperature range (unless otherwise noted)[1]

		MIN	MAX	UNIT
V_{CC}	Supply voltage[2]	–0.5	4.6	V
V_{IN}	Input voltage[3]	–0.5	V_{CC} + 0.5	V
V_{OUT}	Output voltage[3]	–0.5	V_{CC} + 0.5	V
I_{IN}	Input current		20	mA
I_{OUT}	Output current		50	mA
T_A	Specified free-air temperature (no airflow)	–40	85	°C
T_J	Maximum junction temperature		125	°C
T_{stg}	Storage temperature	–65	150	°C

(1) Stresses beyond those listed under *Absolute Maximum Ratings* may cause permanent damage to the device. These are stress ratings only, which do not imply functional operation of the device at these or any other conditions beyond those indicated under *Recommended Operating Conditions*. Exposure to absolute-maximum-rated conditions for extended periods may affect device reliability.
(2) All supply voltages must be supplied simultaneously.
(3) The input and output negative voltage ratings may be exceeded if the input clamp-current and output clamp-current ratings are observed.

6.2 ESD Ratings

			VALUE	UNIT
$V_{(ESD)}$	Electrostatic discharge	Human-body model (HBM), per ANSI/ESDA/JEDEC JS-001[1]	2000	V
		Charged-device model (CDM), per JEDEC specification JESD22-C101[2]	1000	

(1) JEDEC document JEP155 states that 500-V HBM allows safe manufacturing with a standard ESD control process.
(2) JEDEC document JEP157 states that 250-V CDM allows safe manufacturing with a standard ESD control process.

6.3 Recommended Operating Conditions

over operating free-air temperature range (unless otherwise noted).

		MIN	NOM	MAX	UNIT
V_{CC}	Supply voltage	2.375	2.5/3.3	3.60	V
T_A	Ambient temperature	–40		85	°C
T_{PCB}	PCB temperature (measured at thermal pad)			105	°C

6.4 Thermal Information

THERMAL METRIC[1][2][3]			CDCLVP2106 (RHA) VQFN 40 PINS	UNIT
$R_{\theta JA}$	Junction-to-ambient thermal resistance[4]	0 LFM	34.7	°C/W
$R_{\theta JC(top)}$	Junction-to-case (top) thermal resistance		23.7	°C/W
$R_{\theta JB}$	Junction-to-board thermal resistance		10.1	°C/W
ψ_{JT}	Junction-to-top characterization parameter		0.5	°C/W
ψ_{JB}	Junction-to-board characterization parameter		10.0	°C/W
$R_{\theta JC(bot)}$	Junction-to-case (bottom) thermal resistance		3.8	°C/W
$R_{\theta JP}$	Junction-to-pad thermal resistance[5]		3.58	°C/W

(1) For more information about traditional and new thermal metrics, see the *Semiconductor and IC Package Thermal Metrics* application report (SPRA953).
(2) The package thermal resistance is calculated in accordance with JESD 51 and JEDEC 2S2P (high-K board).
(3) Connected to GND with 16 thermal vias (0.3-mm diameter).
(4) 4 × 4 vias on pad
(5) $R_{\theta JP}$ (junction-to-pad) is used for the VQFN package, because the primary heat flow is from the junction to the GND pad of the VQFN package.

Copyright © 2009–2016, Texas Instruments Incorporated

6.5 Electrical Characteristics: LVCMOS Input, at V_{CC} = 2.375 V to 3.6 V

at T_A = –40°C to +85°C and T_{PCB} ≤ 105°C (unless otherwise noted) (1)

PARAMETER		TEST CONDITIONS	MIN	TYP	MAX	UNIT
f_{IN}	Input frequency				200	MHz
V_{th}	Input threshold voltage	External threshold voltage applied to complementary input	1.1		1.8	V
V_{IH}	Input high voltage		V_{th} + 0.1		V_{CC}	V
V_{IL}	Input low voltage		0		V_{th} – 0.1	V
I_{IH}	Input high current	V_{CC} = 3.6 V, V_{IH} = 3.6 V			40	µA
I_{IL}	Input low current	V_{CC} = 3.6 V, V_{IL} = 0 V			–40	µA
ΔV/ΔT	Input edge rate	20% to 80%	1.5			V/ns
I_{CAP}	Input capacitance			5		pF

(1) Figure 5 and Figure 6 show DC test setup.

6.6 Electrical Characteristics: Differential Input, at V_{CC} = 2.375 V to 3.6 V

at T_A = –40°C to +85°C and T_{PCB} ≤ 105°C (unless otherwise noted) (1)

PARAMETER		TEST CONDITIONS	MIN	TYP	MAX	UNIT
f_{IN}	Input frequency	Clock input			2000	MHz
$V_{IN, DIFF, PP}$	Differential input peak-peak voltage	f_{IN} ≤ 1.5 GHz	0.1		1.5	V
		1.5 GHz ≤ f_{IN} ≤ 2 GHz	0.2		1.5	V
V_{ICM}	Input common-mode level		1		V_{CC} – 0.3	V
I_{IH}	Input high current	V_{CC} = 3.6 V, V_{IH} = 3.6 V			40	µA
I_{IL}	Input low current	V_{CC} = 3.6 V, V_{IL} = 0 V			–40	µA
ΔV/ΔT	Input edge rate	20% to 80%	1.5			V/ns
I_{CAP}	Input capacitance			5		pF

(1) Figure 7 and Figure 8 show DC test setup. Figure 9 shows AC test setup.

6.7 Electrical Characteristics: LVPECL Output, at V_{CC} = 2.375 V to 2.625 V

at T_A = –40°C to +85°C and T_{PCB} ≤ 105°C (unless otherwise noted)(1)

PARAMETER		TEST CONDITIONS	MIN	TYP	MAX	UNIT
V_{OH}	Output high voltage	T_A ≤ 85°C	V_{CC} – 1.26		V_{CC} – 0.9	V
		T_{PCB} ≤105°C	V_{CC} – 1.26		V_{CC} – 0.83	
V_{OL}	Output low voltage	T_A ≤ 85°C	V_{CC} – 1.7		V_{CC} – 1.3	V
		T_{PCB} ≤105°C	V_{CC} – 1.7		V_{CC} – 1.25	
$V_{OUT, DIFF, PP}$	Differential output peak-peak voltage	f_{IN} ≤ 2 GHz	0.5		1.35	V
V_{AC_REF}	Input bias voltage(2)	I_{AC_REF} = 2 mA	V_{CC} – 1.6		V_{CC} – 1.1	V
I_{EE}	Supply internal current	Outputs unterminated, T_A ≤ 85°C			92	mA
		Outputs unterminated, T_{PCB} ≤105°C			93	
I_{CC}	Output and internal supply current	All outputs terminated, 50 Ω to V_{CC} – 2 T_A ≤ 85°C			477	mA
		All outputs terminated, 50 Ω to V_{CC} – 2 T_{PCB} ≤105°C			526	

(1) Figure 10 and Figure 11 show DC and AC test setup.
(2) Internally generated bias voltage (V_{AC_REF}) is for 3.3-V operation only. TI recommends applying externally generated bias voltage for V_{CC} < 3 V.

6.8 Electrical Characteristics: LVPECL Output, at V_{CC} = 3 V to 3.6 V(1)

at T_A = –40°C to +85°C (unless otherwise noted)

PARAMETER		TEST CONDITIONS	MIN	TYP	MAX	UNIT
V_{OH}	Output high voltage	T_A ≤ 85°C	V_{CC} – 1.26		V_{CC} – 0.9	V
		T_{PCB} ≤105°C	V_{CC} – 1.26		V_{CC} – 0.85	
V_{OL}	Output low voltage	T_A ≤ 85°C	V_{CC} – 1.7		V_{CC} – 1.3	V
		T_{PCB} ≤105°C	V_{CC} – 1.7		V_{CC} – 1.3	
$V_{OUT, DIFF, PP}$	Differential output peak-peak voltage	f_{IN} ≤ 2 GHz	0.65		1.35	V
V_{AC_REF}	Input bias voltage	I_{AC_REF} = 2 mA	V_{CC} – 1.6		V_{CC} – 1.1	V
I_{EE}	Supply internal current	Outputs unterminated, T_A ≤ 85°C			92	mA
		Outputs unterminated, T_{PCB} ≤105°C			93	
I_{CC}	Output and internal supply current	All outputs terminated, 50 Ω to V_{CC} – 2 T_A ≤ 85°C			477	mA
		All outputs terminated, 50 Ω to V_{CC} – 2 T_{PCB} ≤105°C			526	

(1) Figure 10 and Figure 11 show DC and AC test setup.

6.9 Timing Requirements, at V_{CC} = 2.375 V to 2.625 V

Refer to Figure 1 and Figure 2.

			MIN	NOM	MAX	UNIT
t_{PD}	Propagation delay	$V_{IN, DIFF, PP}$ = 0.1V			550	ps
		$V_{IN, DIFF, PP}$ = 0.3V			550	
$t_{SK,PP}$	Part-to-part skew				150	ps
t_{SK,O_WB}	Within bank output skew				20	ps
t_{SK,O_BB}	Bank-to-bank output skew	Both inputs have equal skew			25	ps
$t_{SK,P}$	Pulse skew (with 50% duty cycle input)	Crossing-point-to-crossing-point distortion, f_{OUT} = 100 MHz	–50		50	ps
t_{RJIT}	Random additive jitter (with 50% duty cycle input)	f_{OUT} = 100 MHz, $V_{IN,SE}$ = V_{CC}, V_{th} = 1.25 V, 10 kHz to 20 MHz		0.124		ps, RMS
		f_{OUT} = 100 MHz, $V_{IN,SE}$ = 0.9 V, V_{th} = 1.1 V, 10 kHz to 20 MHz		0.178		ps, RMS
		f_{OUT} = 2 GHz, $V_{IN,DIFF,PP}$ = 0.2 V, V_{ICM} = 1 V, 10 kHz to 20 MHz		0.061		ps, RMS
		f_{OUT} = 100 MHz, $V_{IN,DIFF,PP}$ = 0.15 V, V_{ICM} = 1 V, 10 kHz to 20 MHz		0.119		ps, RMS
		f_{OUT} = 100 MHz, $V_{IN,DIFF,PP}$ = 1 V, V_{ICM} = 1 V, 10 kHz to 20 MHz		0.104		ps, RMS
		$f_{OUT,8}$ = 500 MHz, $V_{IN,DIFF,PP,0}$ = 0.15 V, $V_{ICM,\ 0}$ = 1 V, $f_{OUT,\ 7}$ = 62.5 MHz, $V_{IN,SE,1}$ = V_{CC}, $V_{th,\ 1}$ = V_{CC}/2		–45.5		dBc

Copyright © 2009–2016, Texas Instruments Incorporated

Timing Requirements, at V_{CC} = 2.375 V to 2.625 V (continued)

Refer to Figure 1 and Figure 2.

			MIN	NOM	MAX	UNIT
P_{SPUR}	Coupling on differential OUT6 from OUT5 in the frequency spectrum of $f_{OUT,8} \pm (f_{OUT,8}/2)$ with synchronous inputs	$f_{OUT,8}$ = 500 MHz, $V_{IN,DIFF,PP,0}$ = 0.15 V, $V_{ICM,0}$ = 1 V, $f_{OUT,7}$ = 62.5 MHz, $V_{IN,DIFF,PP,1}$ = 1 V, $V_{ICM,1}$ = 1 V		–47.9		dBc
		$f_{OUT,8}$ = 500 MHz, $V_{IN,DIFF,PP,0}$ = 0.15 V, $V_{ICM,0}$ = 1 V, $f_{OUT,7}$ = 15.625 MHz, $V_{IN,SE,1} = V_{CC}$, $V_{th,1} = V_{CC}/2$		–57.8		
		$f_{OUT,8}$ = 500 MHz, $V_{IN,DIFF,PP,0}$ = 0.15 V, $V_{ICM,0}$ = 1 V, $f_{OUT,7}$ = 15.625 MHz, $V_{IN,DIFF,PP,1}$ = 1 V, $V_{ICM,1}$ = 1 V		–63.4		
t_R/t_F	Output rise/fall time	20% to 80%			200	ps

6.10 Timing Requirements, at V_{CC} = 3 V to 3.6 V

Refer to Figure 1 and Figure 2.

			MIN	NOM	MAX	UNIT
t_{PD}	Propagation delay	$V_{IN,DIFF,PP}$ = 0.1V			550	ps
		$V_{IN,DIFF,PP}$ = 0.3V			550	
$t_{SK,PP}$	Part-to-part skew				150	ps
t_{SK,O_WB}	Within bank output skew				20	ps
t_{SK,O_BB}	Bank-to-bank output skew	Both inputs have equal skew			25	ps
$t_{SK,P}$	Pulse skew (with 50% duty cycle input)	Crossing-point-to-crossing-point distortion, f_{OUT} = 100 MHz	–50		50	ps

Copyright © 2009–2016, Texas Instruments Incorporated

Timing Requirements, at V_{CC} = 3 V to 3.6 V (continued)

Refer to Figure 1 and Figure 2.

		MIN	NOM	MAX	UNIT
	f_{OUT} = 100 MHz,(1) $V_{IN,SE}$ = V_{CC}, V_{th} = 1.65 V, 10 kHz to 20 MHz		0.121		ps, RMS
	f_{OUT} = 100 MHz,(1) $V_{IN,SE}$ = 0.9 V, V_{th} = 1.1 V, 10 kHz to 20 MHz		0.185		ps, RMS
	f_{OUT} = 2 GHz, $V_{IN,DIFF,PP}$ = 0.2 V, V_{ICM} = 1 V, 10 kHz to 20 MHz		0.077		ps, RMS
	f_{OUT} = 100 MHz,(1) $V_{IN,DIFF,PP}$ = 0.15 V, V_{ICM} = 1 V, 10 kHz to 20 MHz		0.122		ps, RMS
	f_{OUT} = 100 MHz,(1) $V_{IN,DIFF,PP}$ = 1 V, V_{ICM} = 1 V, 10 kHz to 20 MHz		0.105		ps, RMS
t_{RJIT} Random additive jitter (with 50% duty cycle input)	$f_{OUT,8}$ = 500 MHz, $V_{IN,DIFF,PP,0}$ = 0.15 V, $V_{ICM,\ 0}$ = 1 V, $f_{OUT,\ 7}$ = 62.5 MHz, $V_{IN,SE,1}$ = V_{CC}, $V_{th,\ 1}$ = $V_{CC}/2$		–48.4		dBc
	f_{OUT} = 100 MHz(2), Input AC coupled, V_{ICM} = V_{AC_REF}, 12 kHz to 20 MHz		0.068		ps, RMS
	f_{OUT} = 122.88 MHz(3), Input AC coupled, V_{ICM} = V_{AC_REF}, 12 kHz to 20 MHz		0.056		ps, RMS
	f_{OUT} = 156.25 MHz(4), Input AC coupled, V_{ICM} = V_{AC_REF}, 12 kHz to 20 MHz		0.047		ps, RMS
	f_{OUT} = 312.5 MHz(5), Input AC coupled, V_{ICM} = V_{AC_REF}, 12 kHz to 20 MHz		0.026		ps, RMS

(1) 100-MHz Wenzel oscillator, Input slew rate = 0.9 V/ns (single-ended)
(2) 100-MHz Wenzel oscillator, Input slew rate = 3.4 V/ns (differential)
(3) 122.88-MHz Rohde & Schwarz SMA100A, Input slew rate = 3.7 V/ns (differential)
(4) 156.25-MHz Crystek CPRO33 oscillator, Input slew rate = 2.9 V/ns (differential)
(5) 312.5-MHz Rohde & Schwarz SMA100A, Input slew rate = 4 V/ns (differential)

Copyright © 2009–2016, Texas Instruments Incorporated

Timing Requirements, at V_{CC} = 3 V to 3.6 V (continued)

Refer to Figure 1 and Figure 2.

			MIN	NOM	MAX	UNIT
P_{SPUR}	Coupling on differential OUT6 from OUT5 in the frequency spectrum of $f_{OUT,8} \pm (f_{OUT,8}/2)$ with synchronous inputs	$f_{OUT,8}$ = 500 MHz, $V_{IN,DIFF,PP,0}$ = 0.15 V, $V_{ICM,0}$ = 1 V, $f_{OUT,7}$ = 62.5 MHz, $V_{IN,SIFF,PP,1}$ = 1 V, $V_{ICM,1}$ = 1 V		–52.6		dBc
		$f_{OUT,8}$ = 500 MHz, $V_{IN,DIFF,PP,0}$ = 0.15 V, $V_{ICM,0}$ = 1 V, $f_{OUT,7}$ = 15.625 MHz, $V_{IN,SE,1}$ = V_{CC}, $V_{th,1}$ = $V_{CC}/2$		–65.4		
		$f_{OUT,8}$ = 500 MHz, $V_{IN,DIFF,PP,0}$ = 0.15 V, $V_{ICM,0}$ = 1 V, $f_{OUT,7}$ = 15.625 MHz, $V_{IN,DIFF,PP,1}$ = 1 V, $V_{ICM,1}$ = 1 V		–67.1		
t_R/t_F	Output rise/fall time	20% to 80%			200	ps

Figure 1 shows the output voltage and rise/fall time. Output and part-to-part skew are shown in Figure 2.

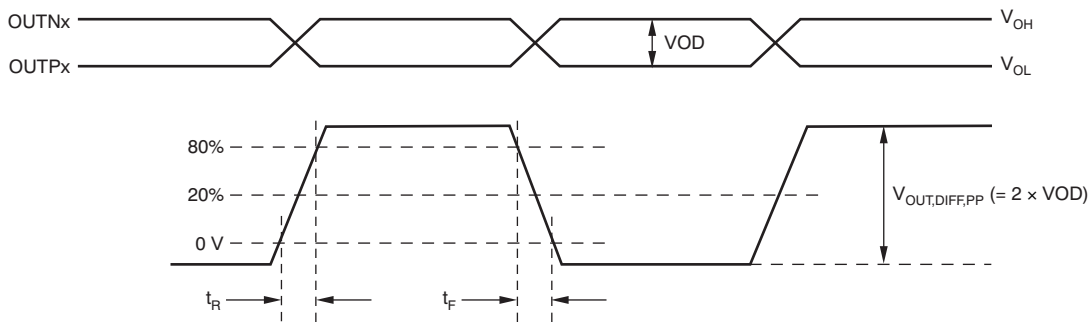

Figure 1. Output Voltage and Rise/Fall Time

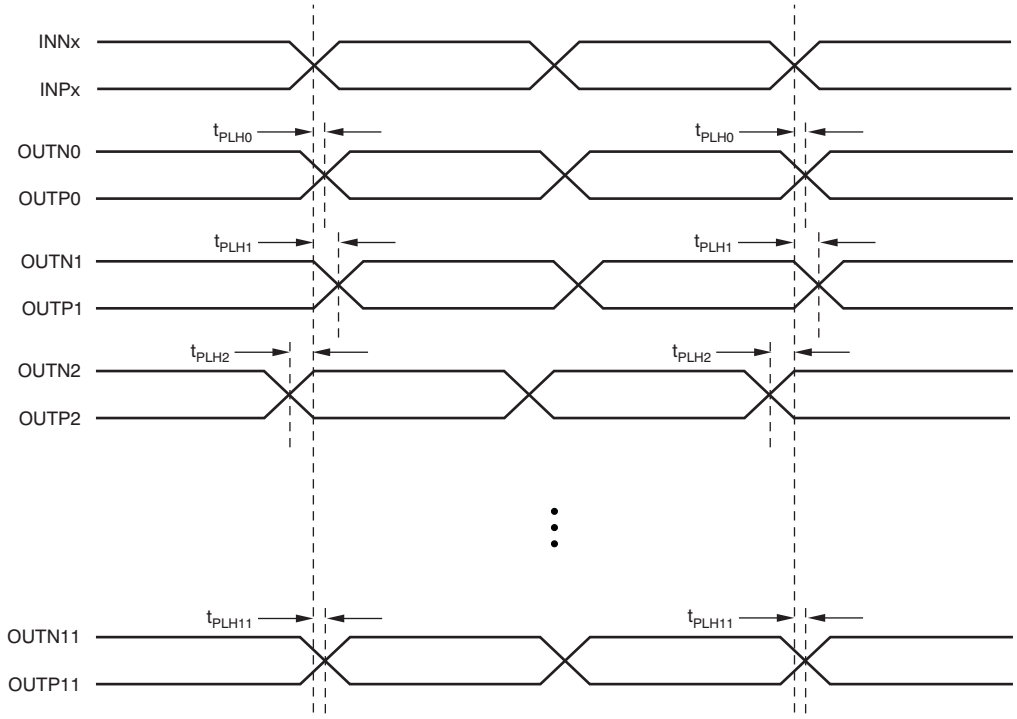

(1) Output skew is calculated as the greater of the following: As the difference between the fastest and the slowest t_{PLHn} (n = 0, 1, 2....11), or as the difference between the fastest and the slowest t_{PHLn} (n = 0, 1, 2....11).

(2) Part-to-part skew is calculated as the greater of the following: As the difference between the fastest and the slowest t_{PLHn} (n = 0, 1, 2....11) across multiple devices, or the difference between the fastest and the slowest t_{PHLn} (n = 0, 1, 2....11) across multiple devices.

Figure 2. Output and Part-to-Part Skew

Copyright © 2009–2016, Texas Instruments Incorporated

6.11 Typical Characteristics

at T_A = –40°C to +85°C (unless otherwise noted)

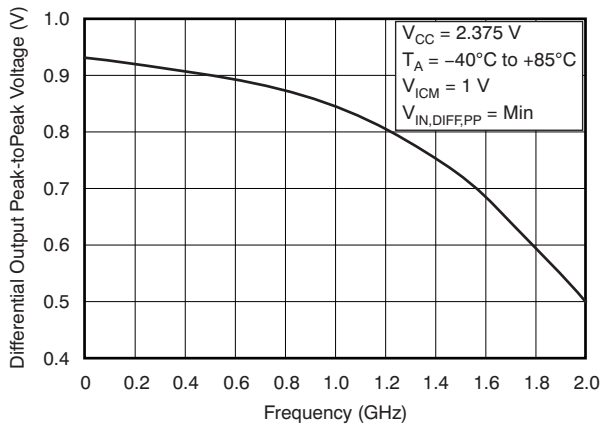

Figure 3. Differential Output Peak-to-Peak Voltage vs Frequency

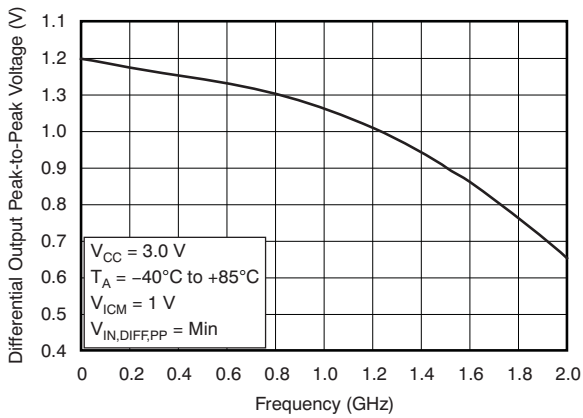

Figure 4. Differential Output Peak-to-Peak Voltage vs Frequency

7 Parameter Measurement Information

7.1 Test Configurations

Figure 5 through Figure 11 show how the device should be set up for a variety of test configurations.

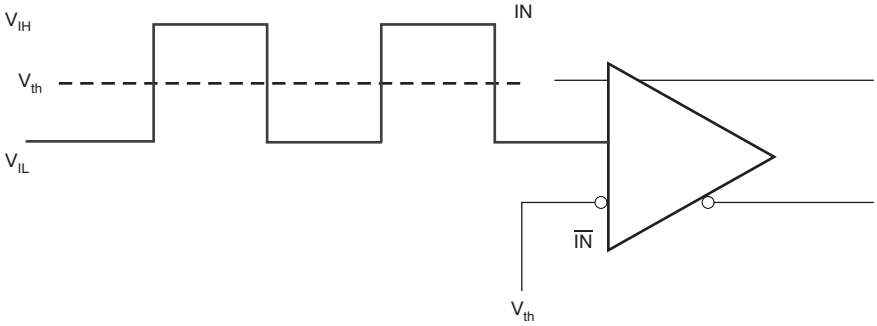

Figure 5. DC-Coupled LVCMOS Input During Device Test

Test Configurations (continued)

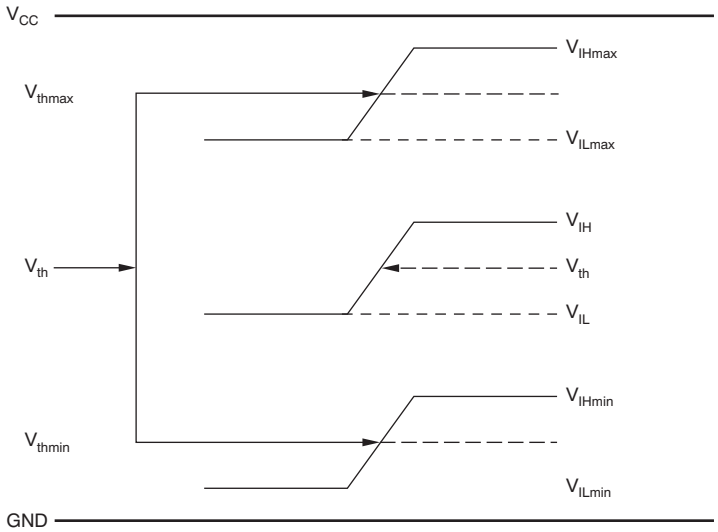

Figure 6. V_{th} Variation over LVCMOS Levels

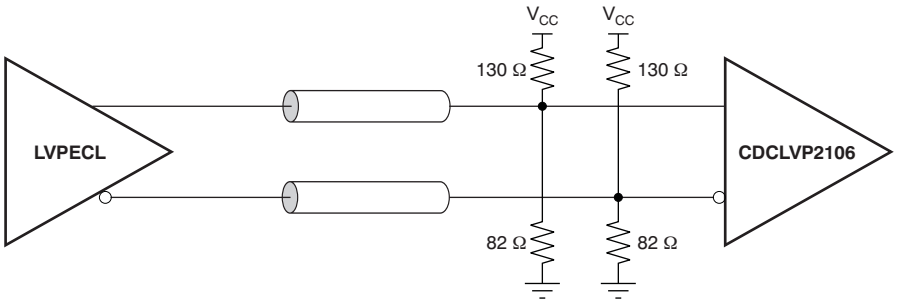

Figure 7. DC-Coupled LVPECL Input During Device Test

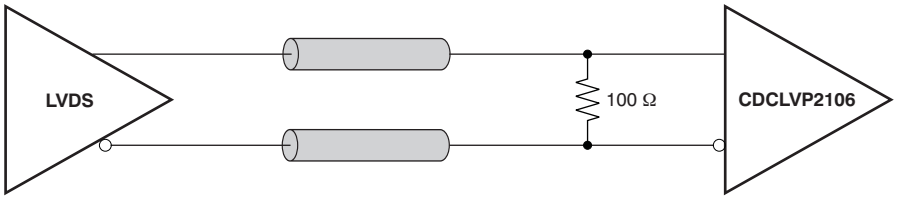

Figure 8. DC-Coupled LVDS Input During Device Test

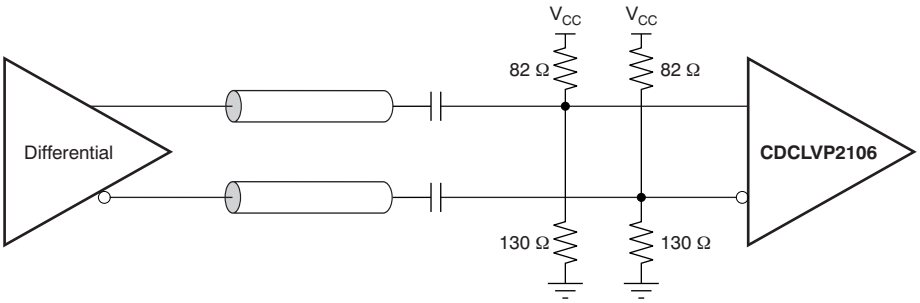

Figure 9. AC-Coupled Differential Input to Device

Copyright © 2009–2016, Texas Instruments Incorporated

Test Configurations (continued)

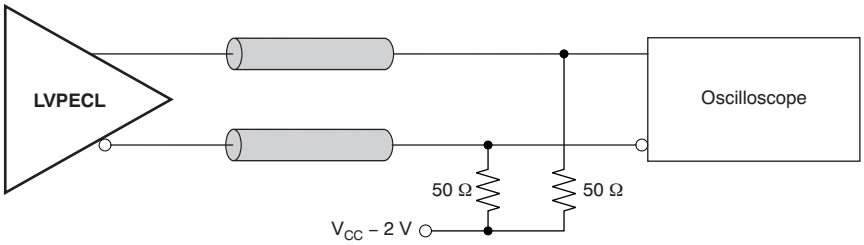

Figure 10. LVPECL Output DC Configuration During Device Test

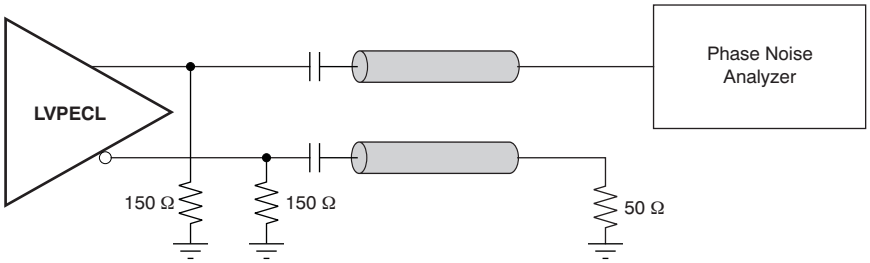

Figure 11. LVPECL Output AC Configuration During Device Test

8 Detailed Description

8.1 Overview

The CDCLVP2106 is an open emitter for LVPECL outputs. Therefore, proper biasing and termination are required to ensure correct operation of the device and to minimize signal integrity. The proper termination for LVPECL outputs is a 50 Ω to (V_{CC} – 2) V, but this direct-coupled (DC) voltage is not readily available on PCB. Therefore, a Thevenin equivalent circuit is worked out for the LVPECL termination in both DC- and AC-coupled configurations. These configurations are shown in Figure 12 (a and b) for V_{CC}=2.5 V and Figure 13 (a and b) for V_{CC}=3.3 V, respectively. TI recommends placing all resistive components close to either the driver end or the receiver end. If the supply voltage for the driver and receiver is different, AC coupling is required.

8.2 Functional Block Diagram

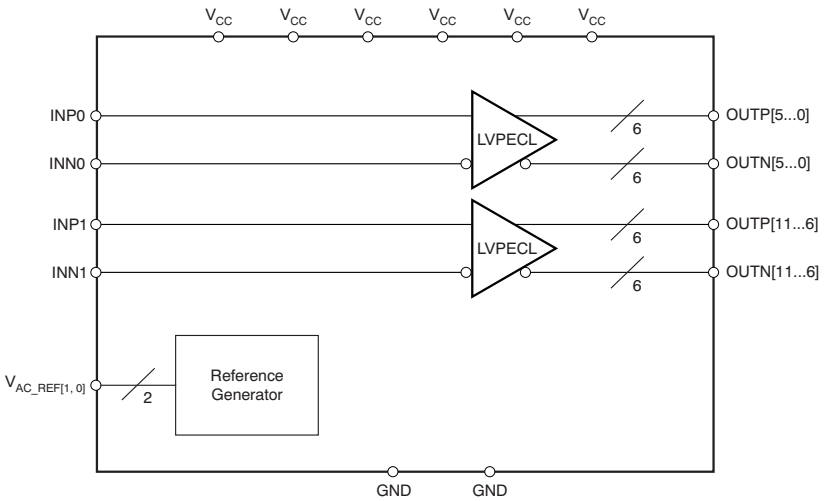

8.3 Feature Description

The CDCLVP2106 is a low-additive jitter universal to LVPECL fan-out buffer with two independent inputs. The small package, low output skew, and low-additive jitter make for a flexible device in demanding applications.

8.4 Device Functional Modes

The two independent inputs of the CDCLVP2106 distribute the input clock to six outputs each. Unused inputs and outputs can be left floating to reduce overall component cost. Both AC- and DC coupling schemes can be used with the CDCLVP2106 to provide greater system flexibility.

8.4.1 LVPECL Output Termination

The CDCLVP2106 is an open emitter for LVPECL outputs. Therefore, proper biasing and termination are required to ensure correct operation of the device and to minimize signal integrity. The proper termination for LVPECL outputs is a 50 Ω to (V_{CC} –2) V, but this DC voltage is not readily available on PCB. Therefore, a Thevenin equivalent circuit is worked out for the LVPECL termination in both direct-coupled (DC) and AC-coupled configurations. These configurations are shown in Figure 12 a and b for V_{CC} = 2.5 V and Figure 13 a and b for V_{CC} = 3.3 V, respectively. TI recommends placing all resistive components close to either the driver end or the receiver end. If the supply voltage for the driver and receiver is different, AC coupling is required.

Copyright © 2009–2016, Texas Instruments Incorporated

Device Functional Modes (continued)

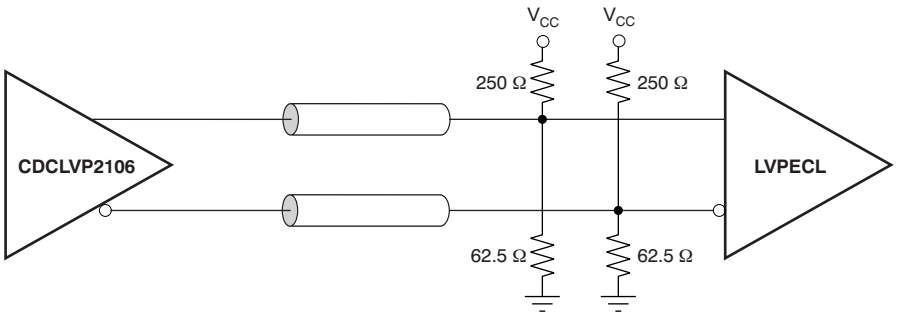

(a) Output DC Termination

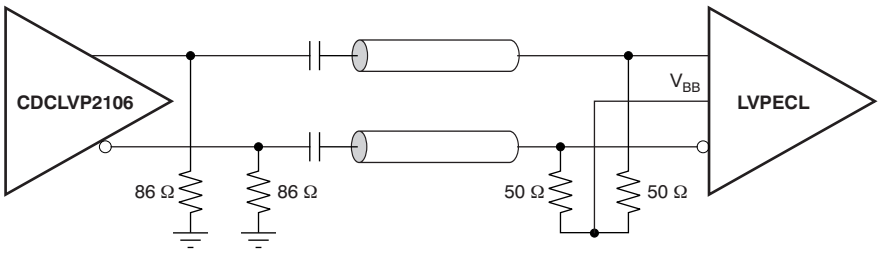

(b) Output AC Termination

Figure 12. LVPECL Output DC and AC Termination for V_{CC} = 2.5 V

Device Functional Modes (continued)

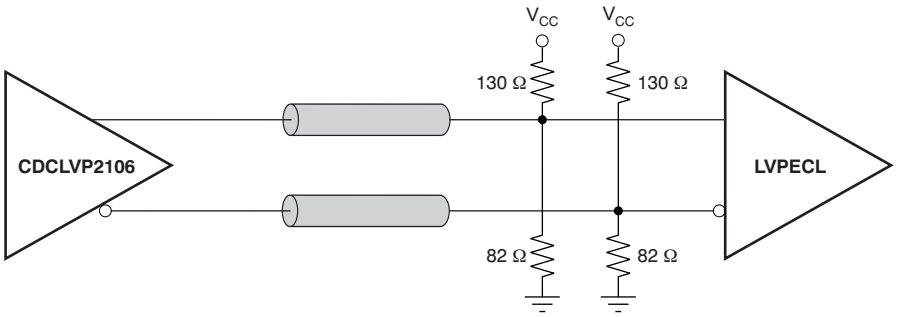

(a) Output DC Termination

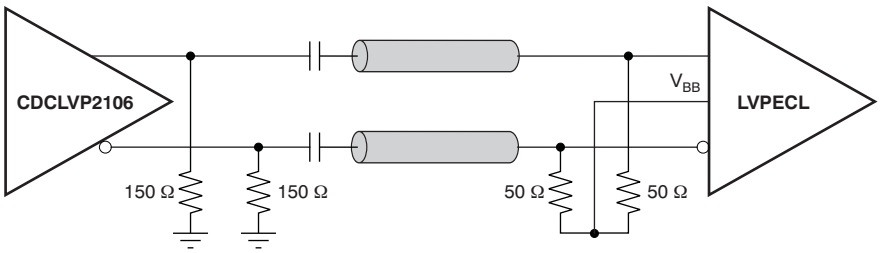

(b) Output AC Termination

Figure 13. LVPECL Output DC and AC Termination for V_{CC} = 3.3 V

8.4.2 Input Termination

The CDCLVP2106 inputs can be interfaced with LVPECL, LVDS, or LVCMOS drivers. Figure 14 shows how to DC-couple an LVCMOS input to the CDCLVP2106. The series resistance (R_S) should be placed close to the LVCMOS driver; its value is calculated as the difference between the transmission line impedance and the driver output impedance.

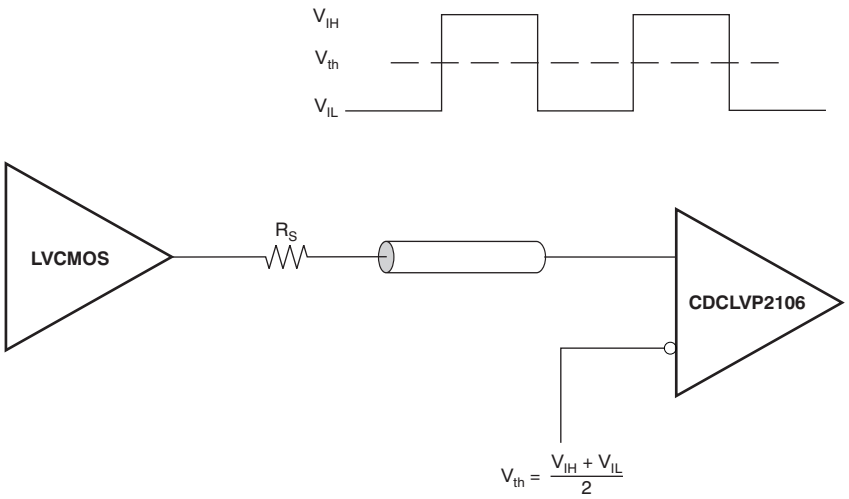

Figure 14. DC-Coupled LVCMOS Input to CDCLVP2106

Copyright © 2009–2016, Texas Instruments Incorporated

Device Functional Modes (continued)

Figure 15 shows how to DC couple LVDS inputs to the CDCLVP2106. Figure 16 and Figure 17 describe the method of DC coupling LVPECL inputs to the CDCLVP2106 for V_{CC} = 2.5 V and V_{CC} = 3.3 V, respectively.

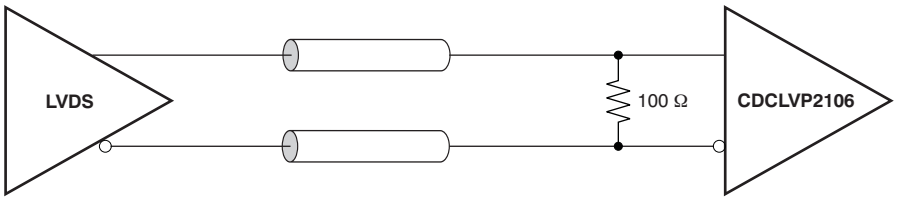

Figure 15. DC-Coupled LVDS Inputs to CDCLVP2106

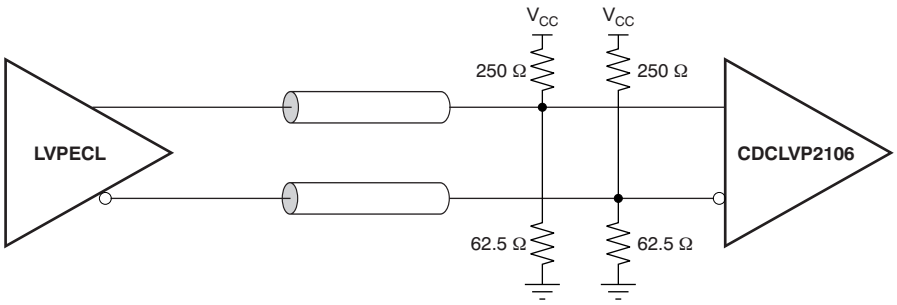

Figure 16. DC-Coupled LVPECL Inputs to CDCLVP2106 (V_{CC} = 2.5 V)

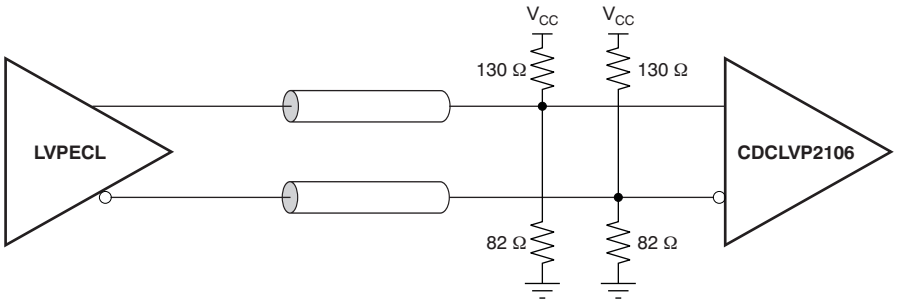

Figure 17. DC-Coupled LVPECL Inputs to CDCLVP2106 (V_{CC} = 3.3 V)

Device Functional Modes (continued)

Figure 18 and Figure 19 show the technique of AC coupling differential inputs to the CDCLVP2106 for V_{CC} = 2.5 V and V_{CC} = 3.3 V, respectively. TI recommends placing all resistive components close to either the driver end or the receiver end. If the supply voltages of the driver and receiver are different, AC coupling is required.

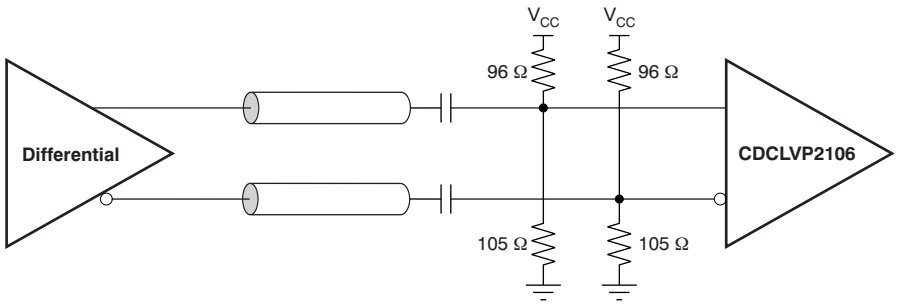

Figure 18. AC-Coupled Differential Inputs to CDCLVP2106 (V_{CC} = 2.5 V)

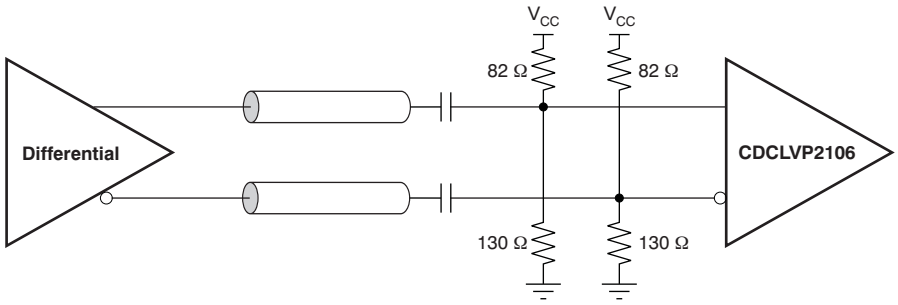

Figure 19. AC-Coupled Differential Inputs to CDCLVP2106 (V_{CC} = 3.3 V)

Copyright © 2009–2016, Texas Instruments Incorporated

9 Application and Implementation

NOTE

Information in the following applications sections is not part of the TI component specification, and TI does not warrant its accuracy or completeness. TI's customers are responsible for determining suitability of components for their purposes. Customers should validate and test their design implementation to confirm system functionality.

9.1 Application Information

The CDCLVP2106 is a low additive jitter LVPECL fan-out buffer that can generate two copies each of two independent LVPECL, LVDS, or LVCMOS inputs. The CDCLVP2106 can accept reference clock frequencies up to 2 GHz while providing low output skew.

9.2 Typical Application

Figure 20 shows a fan-out buffer for line-card application.

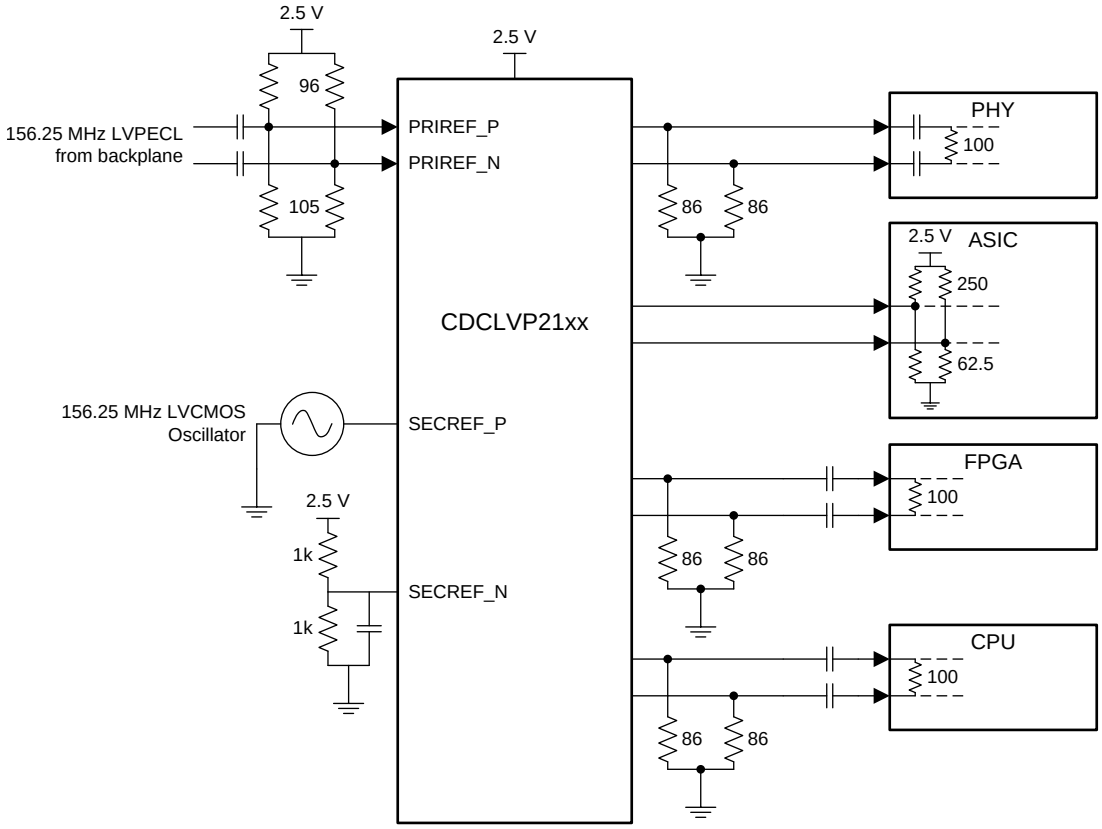

Figure 20. CDCLVP2106 Typical Application

9.2.1 Design Requirements

The CDCLVP2106 shown in Figure 20 is configured to be able to select two inputs: a 156.25-MHz LVPECL clock from the backplane, or a secondary 156.25-MHz LVCMOS 2.5-V oscillator. Either signal can be then fanned out to desired devices, as shown.

The configuration example is driving 4 LVPECL receivers in a line-card application with the following properties:

- The PHY device has internal AC coupling and appropriate termination and biasing. The CDCLVP2106 must be provided with 86-Ω emitter resistors near the driver for proper operation.
- The ASIC is capable of DC coupling with a 2.5-V LVPECL driver such as the CDCLVP2106. This ASIC features internal termination so no additional components are needed.

Typical Application (continued)

- The FPGA requires external AC coupling but has internal termination. Again, 86-Ω emitter resistors are placed near the CDCLVP2106, and 0.1 µF are placed to provide AC coupling. Similarly, the CPU is internally terminated and requires external AC coupling capacitors.

9.2.2 Detailed Design Procedure

Refer to *Input Termination* for proper input terminations, dependent on single ended or differential inputs.

Refer to *LVPECL Output Termination* for output termination schemes depending on the receiver application.

Unused outputs can be left floating.

In Figure 20, the PHY, ASIC, and FPGA/CPU require different schemes. Power supply filtering and bypassing is critical for low-noise applications.

See *Power Supply Recommendations* for recommended filtering techniques. A reference layout is provided on the CDCLVP2106 Evaluation Module, *Low Additive Phase Noise Clock Buffer Evaluation Board User's Guide* (SCAU037).

9.2.3 Application Curves

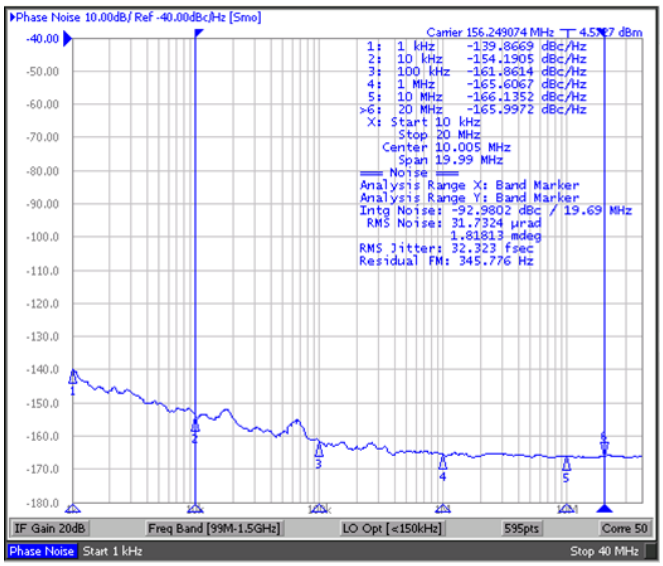

Reference signal is low-noise Crystek XO CPRO33.156.25

32 fs, RMS 10 kHz to 20 MHz

Figure 21. CDCLVP21xx Reference Phase Noise

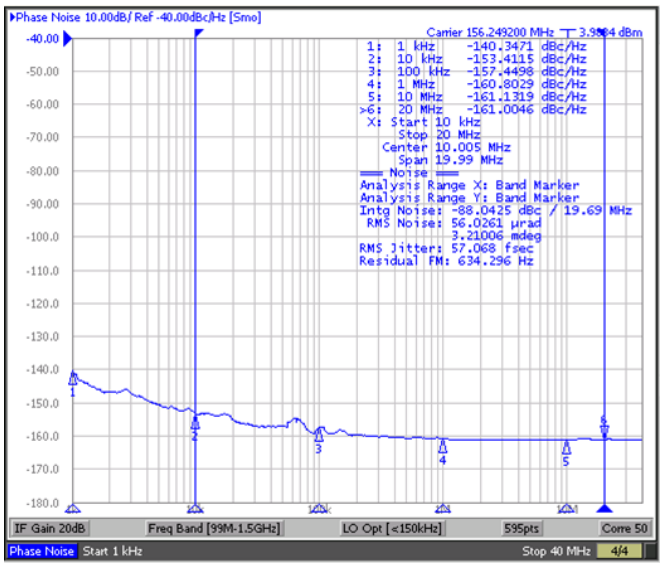

57 fs, RMS 10 kHz to 20 MHz

Figure 22. CDCLVP21xx Output Phase Noise

The low additive noise of the CDCLVP2106 can be shown in this line-card application. The low-noise, 156.25-MHz XO with 32-fs, RMS jitter drives the CDCLVP2106, resulting in 57 fs, RMS when integrated from 10 kHz to 20 MHz. The resultant additive jitter is a low 47 fs, RMS for this configuration.

Copyright © 2009–2016, Texas Instruments Incorporated

10 Power Supply Recommendations

10.1 Power-Supply Filtering

High-performance clock buffers are sensitive to noise on the power supply, which can dramatically increase the additive jitter of the buffer. Thus, it is essential to reduce noise from the system power supply, especially when jitter/phase noise is very critical to applications.

Filter capacitors are used to eliminate the low-frequency noise from the power supply, where the bypass capacitors provide the very low impedance path for high-frequency noise and guard the power-supply system against the induced fluctuations. These bypass capacitors also provide instantaneous current surges as required by the device and should have low equivalent series resistance (ESR). To properly use the bypass capacitors, they must be placed very close to the power-supply pins and laid out with short loops to minimize inductance. TI recommends adding as many high-frequency (for example, 0.1-µF) bypass capacitors as there are supply pins in the package. TI recommends, but does not require, inserting a ferrite bead between the board power supply and the chip power supply that isolates the high-frequency switching noises generated by the clock driver; these beads prevent the switching noise from leaking into the board supply. Choose an appropriate ferrite bead with very low dc resistance because it is imperative to provide adequate isolation between the board supply and the chip supply, as well as to maintain a voltage at the supply pins that is greater than the minimum voltage required for proper operation.

Figure 23 shows this recommended power-supply decoupling method.

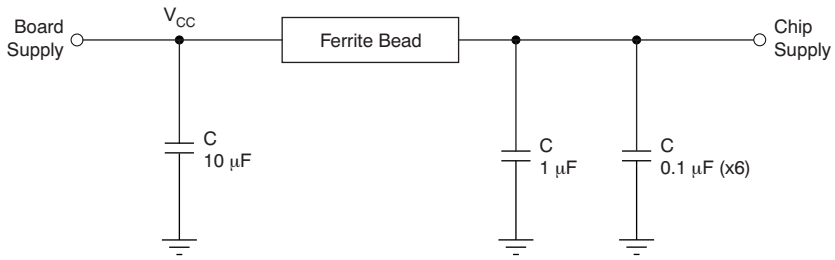

Figure 23. Power-Supply Decoupling

11 Layout

11.1 Layout Guidelines

Power consumption of the CDCLVP2106 can be high enough to require attention to thermal management. For reliability and performance reasons, the die temperature should be limited to a maximum of 125°C. That is, as an estimate, ambient temperature (T_A) plus device power consumption times $R_{\theta JA}$ should not exceed 125°C.

The device package has an exposed pad that provides the primary heat removal path to the printed circuit board (PCB). To maximize the heat dissipation from the package, a thermal landing pattern including multiple vias to a ground plane must be incorporated into the PCB within the footprint of the package. The exposed pad must be soldered down to ensure adequate heat conduction out of the package. Figure 24 shows a recommended land and via pattern.

11.2 Layout Example

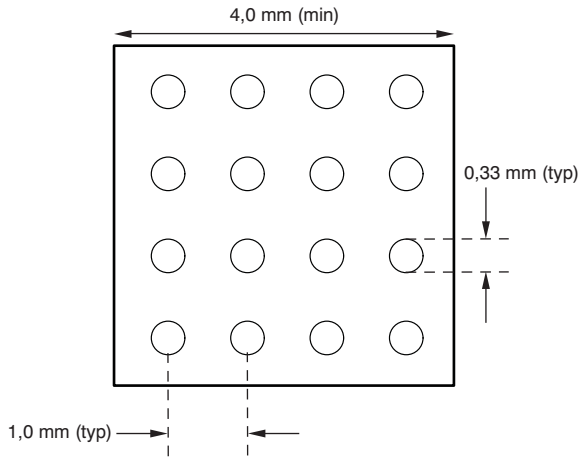

Figure 24. Recommended PCB Layout

11.3 Thermal Considerations

The CDCLVP2106 supports high temperatures on the printed circuit board (PCB) measured at the thermal pad. The system designer must ensure that the maximum junction temperature is not exceeded. Ψ_{JB} can allow the system designer to measure the board temperature with a fine gauge thermocouple and back calculate the junction temperature using Equation 1. Note that Ψ_{JB} is close to $R_{\theta JB}$ because 75 to 95% of the heat of a device is dissipated by the PCB. Further information can be found at SPRA953 and SLUA566.

$$T_{junction} = T_{PCB} + (\Psi_{JB} \times \text{Power}) \quad (1)$$

Example:

Calculation of the junction-lead temperature with a 4-layer JEDEC test board using four thermal vias:

T_{PCB} = 105°C

Ψ_{JB} = 10.0°C/W

$\text{Power}_{inclTerm} = I_{max} \times V_{max}$ = 526 mA × 3.6 V = 1894 mW (maximum power consumption including termination resistors)

$\text{Power}_{exclTerm}$ = 976 mW (maximum power consumption excluding termination resistors, see SLYT127 for further details)

$\Delta T_{Junction} = \Psi_{JB} \times \text{Power}_{exclTerm}$ = 10.0°C/W × 1441 mW = 14.41°C

$T_{Junction} = \Delta T_{Junction} + T_{Chassis}$ = 14.41°C + 105°C = 119.41°C (the maximum junction temperature of 125°C is not violated)

Copyright © 2009–2016, Texas Instruments Incorporated

12 Device and Documentation Support

12.1 Documentation Support

12.1.1 Related Documentation

For related documentation see the following:

- CDCLVP2106 Evaluation Module, *Low Additive Phase Noise Clock Buffer Evaluation Board User's Guide* (SCAU037)
- *Using Thermal Calculation Tools for Analog Components* (SLUA566)
- *Power Consumption of LVPECL and LVDS* (SLYT127)

12.2 Community Resources

The following links connect to TI community resources. Linked contents are provided "AS IS" by the respective contributors. They do not constitute TI specifications and do not necessarily reflect TI's views; see TI's Terms of Use.

TI E2E™ Online Community ***TI's Engineer-to-Engineer (E2E) Community.*** Created to foster collaboration among engineers. At e2e.ti.com, you can ask questions, share knowledge, explore ideas and help solve problems with fellow engineers.

Design Support ***TI's Design Support*** Quickly find helpful E2E forums along with design support tools and contact information for technical support.

12.3 Trademarks

E2E is a trademark of Texas Instruments.
All other trademarks are the property of their respective owners.

12.4 Electrostatic Discharge Caution

These devices have limited built-in ESD protection. The leads should be shorted together or the device placed in conductive foam during storage or handling to prevent electrostatic damage to the MOS gates.

12.5 Glossary

SLYZ022 — *TI Glossary*.

This glossary lists and explains terms, acronyms, and definitions.

13 Mechanical, Packaging, and Orderable Information

The following pages include mechanical, packaging, and orderable information. This information is the most current data available for the designated devices. This data is subject to change without notice and revision of this document. For browser-based versions of this data sheet, refer to the left-hand navigation.

PACKAGING INFORMATION

Orderable part number	Status (1)	Material type (2)	Package | Pins	Package qty | Carrier	RoHS (3)	Lead finish/ Ball material (4)	MSL rating/ Peak reflow (5)	Op temp (°C)	Part marking (6)
CDCLVP2106RHAR	Active	Production	VQFN (RHA) | 40	2500 | LARGE T&R	Yes	NIPDAU	Level-3-260C-168 HR	-40 to 85	CDCLVP 2106
CDCLVP2106RHAR.B	Active	Production	VQFN (RHA) | 40	2500 | LARGE T&R	Yes	NIPDAU	Level-3-260C-168 HR	-40 to 85	CDCLVP 2106
CDCLVP2106RHAT	Active	Production	VQFN (RHA) | 40	250 | SMALL T&R	Yes	NIPDAU	Level-3-260C-168 HR	-40 to 85	CDCLVP 2106
CDCLVP2106RHAT.B	Active	Production	VQFN (RHA) | 40	250 | SMALL T&R	Yes	NIPDAU	Level-3-260C-168 HR	-40 to 85	CDCLVP 2106

(1) **Status:** For more details on status, see our product life cycle.

(2) **Material type:** When designated, preproduction parts are prototypes/experimental devices, and are not yet approved or released for full production. Testing and final process, including without limitation quality assurance, reliability performance testing, and/or process qualification, may not yet be complete, and this item is subject to further changes or possible discontinuation. If available for ordering, purchases will be subject to an additional waiver at checkout, and are intended for early internal evaluation purposes only. These items are sold without warranties of any kind.

(3) **RoHS values:** Yes, No, RoHS Exempt. See the TI RoHS Statement for additional information and value definition.

(4) **Lead finish/Ball material:** Parts may have multiple material finish options. Finish options are separated by a vertical ruled line. Lead finish/Ball material values may wrap to two lines if the finish value exceeds the maximum column width.

(5) **MSL rating/Peak reflow:** The moisture sensitivity level ratings and peak solder (reflow) temperatures. In the event that a part has multiple moisture sensitivity ratings, only the lowest level per JEDEC standards is shown. Refer to the shipping label for the actual reflow temperature that will be used to mount the part to the printed circuit board.

(6) **Part marking:** There may be an additional marking, which relates to the logo, the lot trace code information, or the environmental category of the part.

Multiple part markings will be inside parentheses. Only one part marking contained in parentheses and separated by a "~" will appear on a part. If a line is indented then it is a continuation of the previous line and the two combined represent the entire part marking for that device.

Important Information and Disclaimer: The information provided on this page represents TI's knowledge and belief as of the date that it is provided. TI bases its knowledge and belief on information provided by third parties, and makes no representation or warranty as to the accuracy of such information. Efforts are underway to better integrate information from third parties. TI has taken and continues to take reasonable steps to provide representative and accurate information but may not have conducted destructive testing or chemical analysis on incoming materials and chemicals. TI and TI suppliers consider certain information to be proprietary, and thus CAS numbers and other limited information may not be available for release.

In no event shall TI's liability arising out of such information exceed the total purchase price of the TI part(s) at issue in this document sold by TI to Customer on an annual basis.

TAPE AND REEL INFORMATION

REEL DIMENSIONS

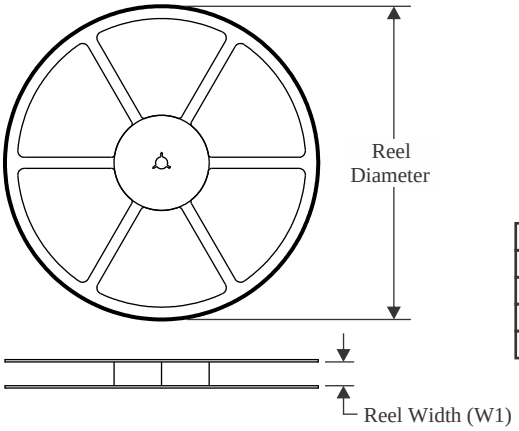

TAPE DIMENSIONS

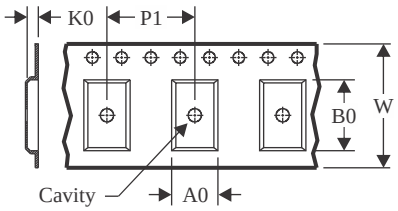

A0	Dimension designed to accommodate the component width
B0	Dimension designed to accommodate the component length
K0	Dimension designed to accommodate the component thickness
W	Overall width of the carrier tape
P1	Pitch between successive cavity centers

QUADRANT ASSIGNMENTS FOR PIN 1 ORIENTATION IN TAPE

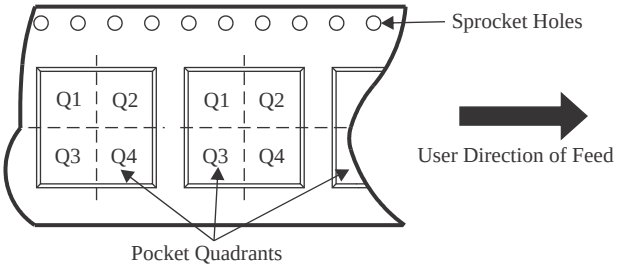

*All dimensions are nominal

Device	Package Type	Package Drawing	Pins	SPQ	Reel Diameter (mm)	Reel Width W1 (mm)	A0 (mm)	B0 (mm)	K0 (mm)	P1 (mm)	W (mm)	Pin1 Quadrant
CDCLVP2106RHAR	VQFN	RHA	40	2500	330.0	16.4	6.3	6.3	1.5	12.0	16.0	Q2

TAPE AND REEL BOX DIMENSIONS

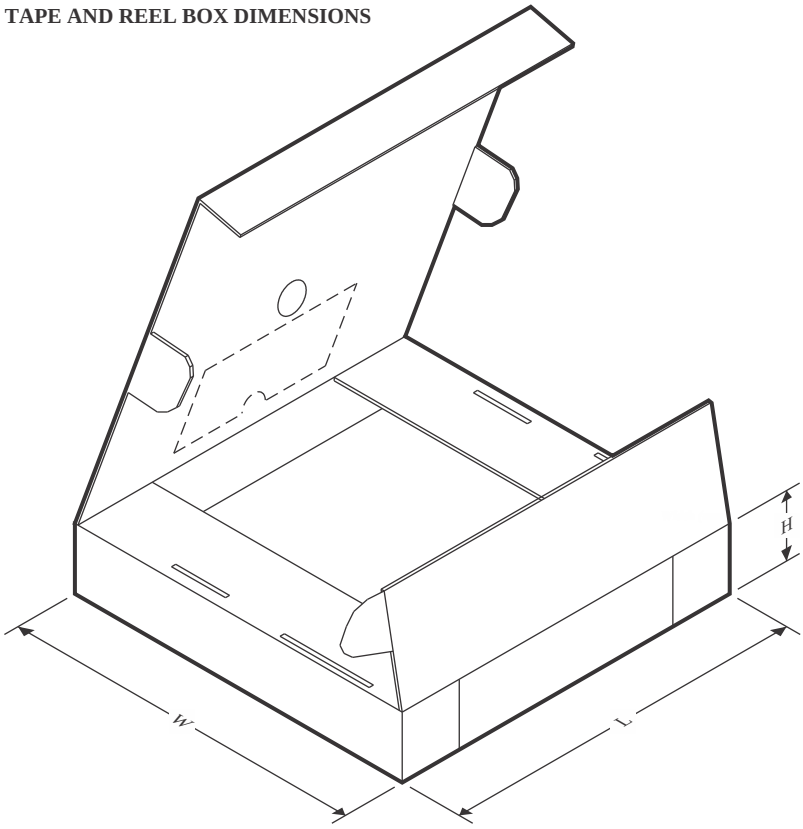

*All dimensions are nominal

Device	Package Type	Package Drawing	Pins	SPQ	Length (mm)	Width (mm)	Height (mm)
CDCLVP2106RHAR	VQFN	RHA	40	2500	350.0	350.0	43.0

GENERIC PACKAGE VIEW

RHA 40

VQFN - 1 mm max height

6 x 6, 0.5 mm pitch

PLASTIC QUAD FLATPACK - NO LEAD

This image is a representation of the package family, actual package may vary.
Refer to the product data sheet for package details.

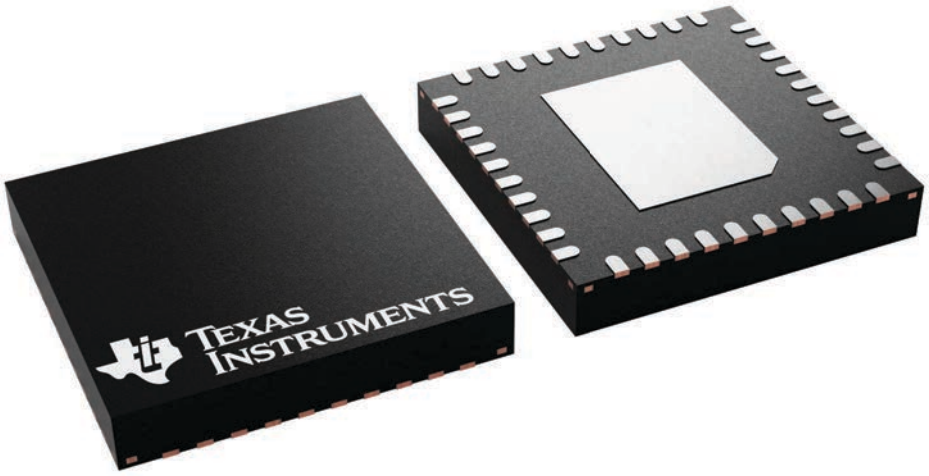

4225870/A

RHA0040H

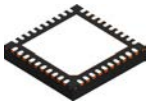

PACKAGE OUTLINE

VQFN - 1 mm max height

PLASTIC QUAD FLATPACK - NO LEAD

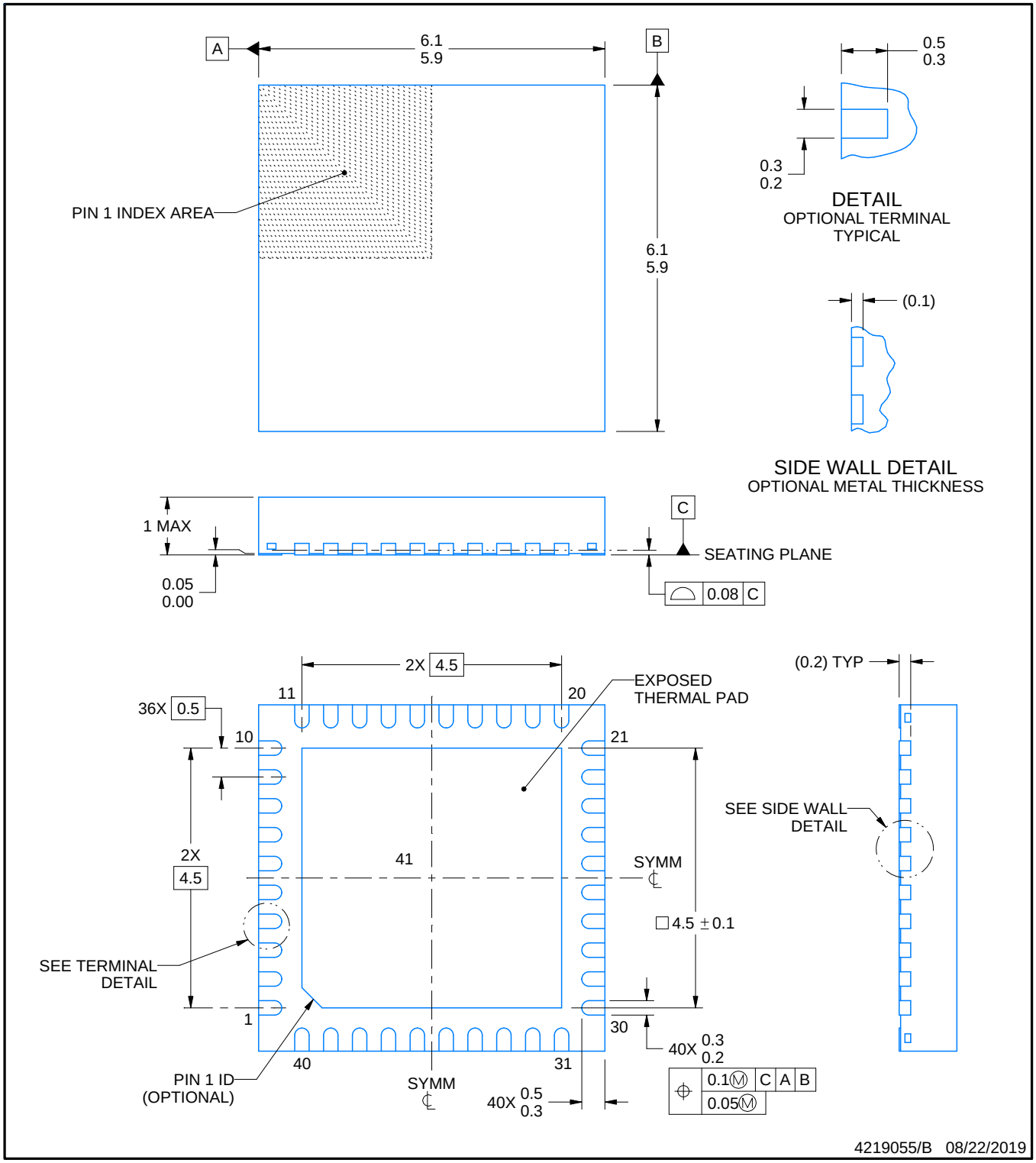

NOTES:

1. All linear dimensions are in millimeters. Any dimensions in parenthesis are for reference only. Dimensioning and tolerancing per ASME Y14.5M.
2. This drawing is subject to change without notice.
3. The package thermal pad must be soldered to the printed circuit board for thermal and mechanical performance.

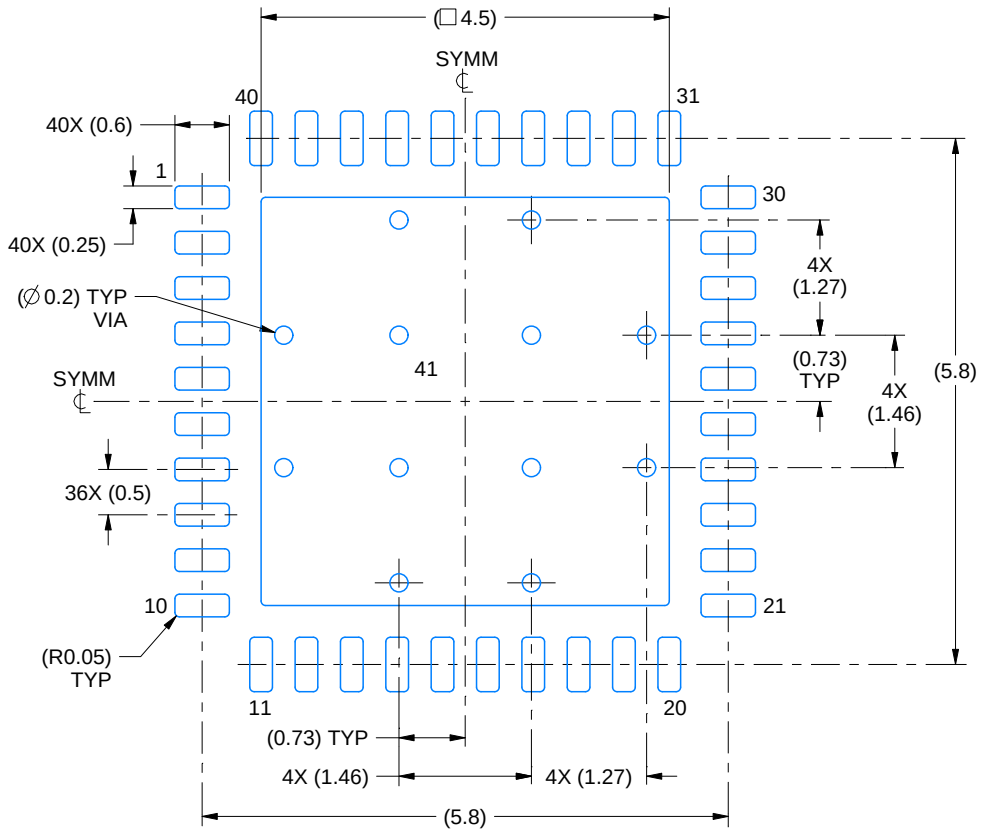

LAND PATTERN EXAMPLE
EXPOSED METAL SHOWN
SCALE:12X

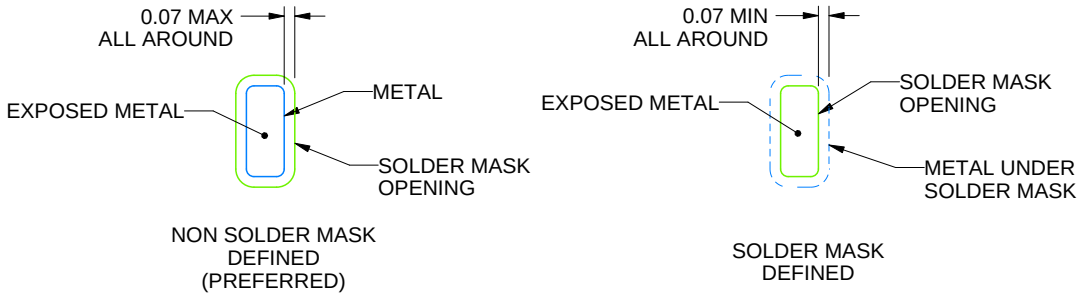

SOLDER MASK DETAILS

4219055/B 08/22/2019

NOTES: (continued)

4. This package is designed to be soldered to a thermal pad on the board. For more information, see Texas Instruments literature number SLUA271 (www.ti.com/lit/slua271).
5. Vias are optional depending on application, refer to device data sheet. If any vias are implemented, refer to their locations shown on this view. It is recommended that vias under paste be filled, plugged or tented.

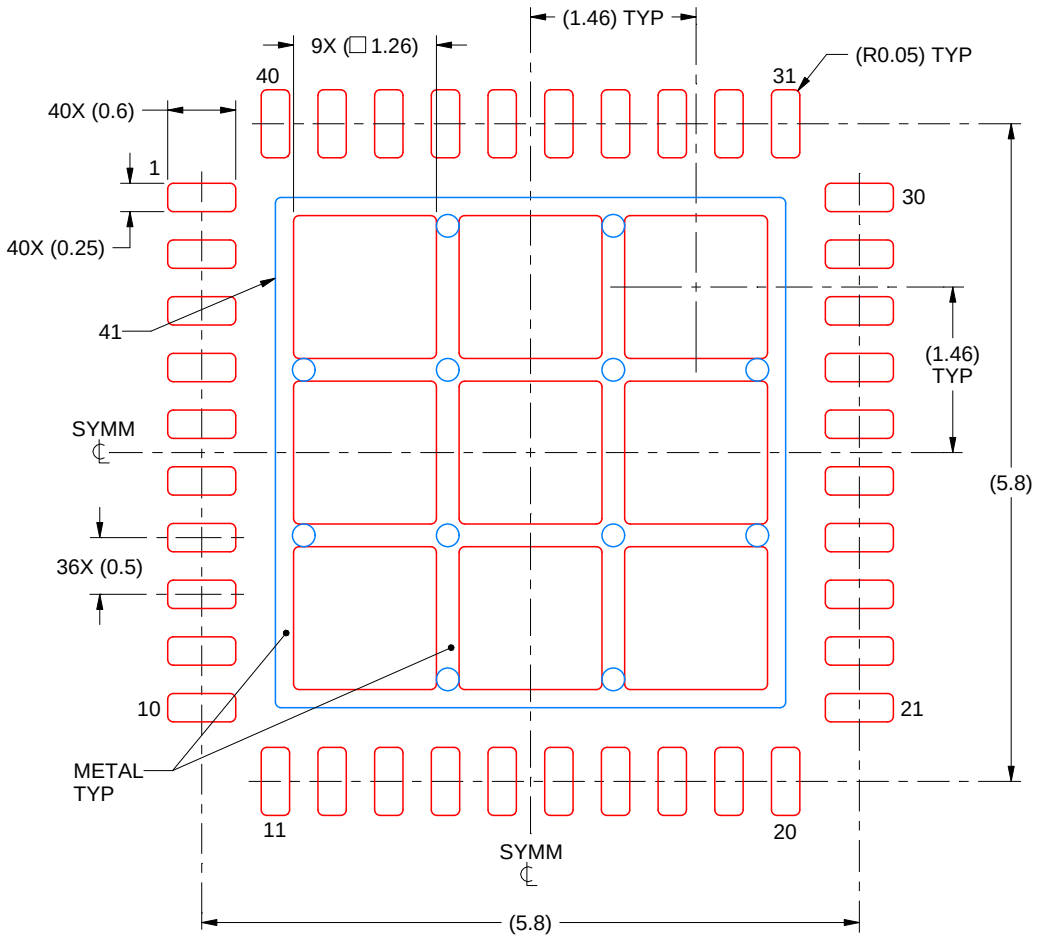

SOLDER PASTE EXAMPLE
BASED ON 0.125 mm THICK STENCIL

EXPOSED PAD 41:
70% PRINTED SOLDER COVERAGE BY AREA
SCALE:15X

4219055/B 08/22/2019

NOTES: (continued)

6. Laser cutting apertures with trapezoidal walls and rounded corners may offer better paste release. IPC-7525 may have alternate design recommendations.

IMPORTANT NOTICE AND DISCLAIMER

TI PROVIDES TECHNICAL AND RELIABILITY DATA (INCLUDING DATASHEETS), DESIGN RESOURCES (INCLUDING REFERENCE DESIGNS), APPLICATION OR OTHER DESIGN ADVICE, WEB TOOLS, SAFETY INFORMATION, AND OTHER RESOURCES “AS IS” AND WITH ALL FAULTS, AND DISCLAIMS ALL WARRANTIES, EXPRESS AND IMPLIED, INCLUDING WITHOUT LIMITATION ANY IMPLIED WARRANTIES OF MERCHANTABILITY, FITNESS FOR A PARTICULAR PURPOSE OR NON-INFRINGEMENT OF THIRD PARTY INTELLECTUAL PROPERTY RIGHTS.

These resources are intended for skilled developers designing with TI products. You are solely responsible for (1) selecting the appropriate TI products for your application, (2) designing, validating and testing your application, and (3) ensuring your application meets applicable standards, and any other safety, security, regulatory or other requirements.

These resources are subject to change without notice. TI grants you permission to use these resources only for development of an application that uses the TI products described in the resource. Other reproduction and display of these resources is prohibited. No license is granted to any other TI intellectual property right or to any third party intellectual property right. TI disclaims responsibility for, and you fully indemnify TI and its representatives against any claims, damages, costs, losses, and liabilities arising out of your use of these resources.

TI’s products are provided subject to TI’s Terms of Sale, TI’s General Quality Guidelines, or other applicable terms available either on ti.com or provided in conjunction with such TI products. TI’s provision of these resources does not expand or otherwise alter TI’s applicable warranties or warranty disclaimers for TI products. Unless TI explicitly designates a product as custom or customer-specified, TI products are standard, catalog, general purpose devices.

TI objects to and rejects any additional or different terms you may propose.

Copyright © 2026, Texas Instruments Incorporated

Last updated 10/2025