DRV81080-Q1: 8-Channel, 40V, 700mΩ, Fully Protected High-side Driver for Automotive LED, Lighting and Motor Control

1 Features

- AEC-Q100 qualified for automotive applications
  - Temperature grade 1: –40°C to +125°C, T_A
- Functional Safety-Capable
  - Documentation to aid functional safety design
- **3V to 40V** Analog supply voltage
  - Cranking capability down to 3V
  - Supports LV124 automotive standard
- **3V to 5.5V** Digital supply voltage
  - Compatible with 3.3V and 5V microcontrollers
- **-18V** maximum source to ground clamping voltage
- Two independent battery feeds (V_{M1}, V_{M2})
  - Each pin is the drain of four high-side channels
- $R_{DS(ON)}$: **700mΩ** typical at 12V, 25 °C
- Current: **330mA** per output at 85 °C, with all channels ON
- **2 parallel inputs** with mapping functionality
- Fail-safe activation in **Limp Home** mode
  - Using nSLEEP and IN pins
- Two independent internal **PWM** generators
- **Bulb Inrush Mode** (BIM) to drive lamps
  - For 2W/5W lamps and other capacitive loads
- Low-current sleep mode, < 3µA for $T_J \leq 85$ °C
- 16-bit SPI for control and diagnosis
  - Daisy Chain capability
  - Compatible with 8-bit SPI devices
- Supports various **protection features**
  - Reverse battery protection
  - Short circuit to ground and battery protection
  - Stable behavior at under voltage conditions
  - Over Current latch OFF
  - Overtemperature warning
  - Thermal shutdown latch OFF
  - Overvoltage protection
  - Loss of battery and loss of ground protection
  - Electrostatic discharge (ESD) protection
- Supports several **diagnostic features**
  - Diagnostic information via SPI register
  - Over Load detection at ON state
  - Open Load detection in ON and OFF state
  - Input and output status monitor

2 Applications

- Zone Control Module (ZCM)
- Automotive Body Control Module (BCM)
- Automotive Lighting
- Gasoline and Diesel Engine
- Vehicle Control Unit (VCU)
- Programmable Logic Controller (PLC)

3 Description

The DRV81080-Q1 is an 8-channel high-side driver with protection and diagnostics. The device is designed to control relays, LEDs, lamps and motors.

A serial peripheral interface (SPI) with daisy chain is utilized for control and diagnosis of the loads and the device. Two input pins with mapping functionality allow direct control of the outputs. The device supports Limp Home for fail-safe activation. Integrated PWM generators enable driving LEDs, and bulb inrush mode enables driving loads with large capacitance. Clamp circuits on each output dissipates the energy during turning OFF inductive loads.

The device supports various protection features such as undervoltage, overvoltage, short circuit and open load detection. A high level of integration with embedded protection and diagnostic features make the DRV81080-Q1 an excellent choice for automotive body and powertrain applications.

Device Information

PART NUMBER	PACKAGE (1)	PACKAGE SIZE(2)	BODY SIZE (NOM)
DRV81080QPWPRQ1	HTSSOP (24)	7.8mm × 6.4mm	7.7mm x 4.4mm

(1) For more information, see Section 11.
(2) The package size (length × width) is a nominal value and includes pins, where applicable.

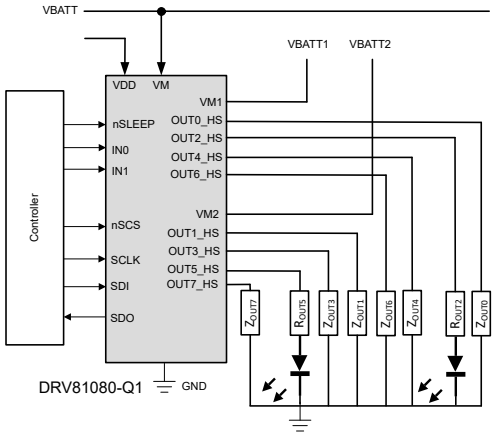

Simplified Schematic

An IMPORTANT NOTICE at the end of this data sheet addresses availability, warranty, changes, use in safety-critical applications, intellectual property matters and other important disclaimers. PRODUCTION DATA.

Table of Contents

1 Features....1
2 Applications....1
3 Description....1
4 Device Comparison....3
5 Pin Configuration and Functions....4
6 Specifications....6
6.1 Absolute Maximum Ratings....6
6.2 ESD Ratings....7
6.3 Recommended Operating Conditions....7
6.4 Thermal Information....7
6.5 Electrical Characteristics....8
6.6 SPI Timing Requirements....13
6.7 Typical Characteristics....14
7 Detailed Description....16
7.1 Overview....16
7.2 Functional Block Diagram....17
7.3 Feature Description....18
8 Application and Implementation....47
8.1 Application Information....47
8.2 Typical Application....48
8.3 Layout....50
9 Device and Documentation Support....52
9.1 Receiving Notification of Documentation Updates....52
9.2 Support Resources....52
9.3 Trademarks....52
9.4 Electrostatic Discharge Caution....52
9.5 Glossary....52
10 Revision History....52
11 Mechanical, Packaging, and Orderable Information....52

Copyright © 2025 Texas Instruments Incorporated

4 Device Comparison

The number of low-side, high-side and configurable channels in each device of the DRV81xxx-Q1 family is shown in Table 4-1.

Table 4-1. Device Comparison

DEVICE NAME	Number of High-side Channels	Number of Low-side Channels	Number of Configurable (high-side or low-side) Channels
DRV81242-Q1	4	2	2
DRV81080-Q1	8	0	0
DRV81602-Q1	0	2	6
DRV81620-Q1	2	0	6
DRV81008-Q1	0	8	0
DRV81004-Q1	0	4	0

Copyright © 2025 Texas Instruments Incorporated

5 Pin Configuration and Functions

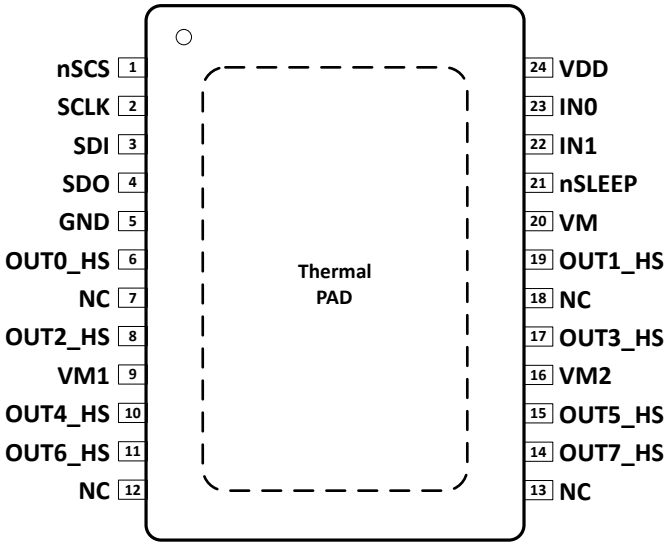

Figure 5-1. 24-Pin HTSSOP (PWP) Top View

Table 5-1. Pin Functions

PIN		TYPE	DESCRIPTION
NAME	NO.		
VM	20	P	Analog supply voltage for power stage and protection circuits
VM1	9	P	Supply voltage for FET drain current (channels 0, 2, 4 and 6)
VM2	16	P	Supply voltage for FET drain current (channels 1, 3, 5 and 7)
VDD	24	P	Digital supply voltage for SPI
GND	5	G	Ground pin
nSCS	1	I	Serial chip select. An active low on this pin enables the serial interface communications. Integrated pull-up to VDD.
SCLK	2	I	Serial clock input. Serial data is shifted out and captured on the corresponding rising and falling edge on this pin. Integrated pull-down to GND.
SDI	3	I	Serial data input. Data is captured on the falling edge of the SCLK. Integrated pull-down to GND.
SDO	4	O	Serial data output. Data is shifted out on the rising edge of the SCLK.
nSLEEP	21	I	Logic high activates Idle mode. Integrated pull-down to GND.
IN0	23	I	Connected to channel 2 by default and in Limp Home mode. Integrated pull-down to GND.
IN1	22	I	Connected to channel 3 by default and in Limp Home mode. Integrated pull-down to GND
OUT0_HS	6	O	Source of high-side FET (channel 0)
OUT2_HS	8	O	Source of high-side FET (channel 2)
OUT4_HS	10	O	Source of high-side FET (channel 4)
OUT6_HS	11	O	Source of high-side FET (channel 6)
OUT7_HS	14	O	Source of high-side FET (channel 7)
OUT5_HS	15	O	Source of high-side FET (channel 5)
OUT3_HS	17	O	Source of high-side FET (channel 3)

Copyright © 2025 Texas Instruments Incorporated

Table 5-1. Pin Functions (continued)

PIN		TYPE	DESCRIPTION
NAME	NO.		
OUT1_HS	19	O	Source of high-side FET (channel 1)
NC	7, 12, 13, 18	-	No connect, internally not bonded
PAD	-	-	Exposed pad. Connect the exposed pad to PCB ground for cooling and EMC.

I = Input, O = Output, I/O = Input or Output, G = Ground, P = Power.

Copyright © 2025 Texas Instruments Incorporated

6 Specifications

6.1 Absolute Maximum Ratings

Over T_J = -40 °C to +150 °C, all voltages with respect to ground, positive current flowing into pin (unless otherwise noted)

		MIN	MAX	UNIT
V_M	Analog supply voltage	-0.3	42	V
V_{DD}	Digital supply voltage	-0.3	5.75	V
V_{M_LD}	Supply voltage for load dump protection		42	V
V_{M_SC}	Supply voltage for short circuit protection	0	28	V
$-V_{M_REV}$	Reverse polarity voltage, $T_J(0)$ = 25 °C, t ≤ 2 min, R_L = 70Ω on all channels	-	18	V
I_{VM}	Current through VM pin, t ≤ 2 min	-10	10	mA
$\|I_L\|$	Load current, single channel	-	I_{L_OCP0}	A
V_{DS}	Voltage at power FET	-0.3	42	V
V_{OUT_S}	FET source voltage	-18	V_{OUT_D} + 0.3	V
V_{OUT_D}	FET drain voltage (V_{OUT_S} ≥ 0V)	V_{OUT_S} - 0.3	42	V
V_{OUT_D}	FET drain voltage (V_{OUT_S} < 0V)	-0.3	42	V
E_{AS}	Maximum energy dissipation single pulse, $T_J(0)$ = 25 °C, $I_L(0)$ = $2*I_{L_EAR}$	-	50	mJ
E_{AS}	Maximum energy dissipation single pulse, $T_J(0)$ = 150 °C, $I_L(0)$ = 400mA	-	25	mJ
E_{AR}	Maximum energy dissipation for repetitive pulses $-I_{L_EAR}$, $2*10^6$ cycles, $T_J(0)$ = 85 °C, $I_L(0)$ = I_{L_EAR}	-	10	mJ
V_I	Voltage at IN0, IN1, nSCS, SCLK, SDI pins	-0.3	5.75	V
V_{nSLEEP}	Voltage at nSLEEP pin	-0.3	42	V
V_{SDO}	Voltage at SDO pin	-0.3	V_{DD} + 0.3	V
T_A	Ambient Temperature	-40	125	°C
T_J	Junction Temperature	-40	150	°C
T_{stg}	Storage temperature	-55	150	°C

- *The short circuit protection feature does not support short inductance < 1µH above 28V.*
- *Load dump is for a duration of t_{on} = 400ms; t_{on}/t_{off} = 10%; limited to 100 pulses.*
- *For reverse polarity, $T_J(0)$ = 25 °C, t ≤ 2 min, R_L = 70Ω on all channels. Device is mounted on a FR4 2s2p board according to JEDEC JESD51-2,-5,-7 at natural convection; the Product (Chip+Package) was simulated on a 76.2 *114.3 *1.5 mm board with 2 inner copper layers (2 * 70µm Cu, 2 * 35µm Cu). Where applicable a thermal via array under the exposed pad contacted the first inner copper layer.*
- *For maximum energy dissipation, pulse shape represents inductive switch off: $I_L(t) = I_L(0) \times (1 - t / t_{pulse})$; 0 < t < t_{pulse}.*
- *Operation outside the Absolute Maximum Ratings may cause permanent device damage. Absolute Maximum Ratings do not imply functional operation of the device at these or any other conditions beyond those listed under Recommended Operating Conditions. If used outside the Recommended Operating Conditions but within the Absolute Maximum Ratings, the device may not be fully functional, and this may affect device reliability, functionality, performance, and shorten the device lifetime.*
- *Fault conditions are considered as "outside" normal operating range.*

Copyright © 2025 Texas Instruments Incorporated

6.2 ESD Ratings

				VALUE	UNIT
V_{ESD}	Electrostatic discharge	Human-body model (HBM), per AEC Q100-002[1]	OUT pins vs. VM or GND	±4000	V
			Other pins	±2000	
		Charged device model (CDM), per AECQ100-011	Corner pins (1, 12, 13, 24)	±750	
			Other pins	±500	

(1) *AEC Q100-002 indicates HBM stressing is done in accordance with the ANSI/ESDA/JEDEC JS-001 specification.*

6.3 Recommended Operating Conditions

Over operating free-air temperature range (unless otherwise noted)

		MIN	NOM	MAX	UNIT
V_{M_NOR}	Supply voltage range for normal operation	4	-	40	V
V_{M_LOW}	Lower supply voltage range for extended operation, parameter deviation possible	3	-	4	V
V_{DD}	Logic supply voltage, f_{SCLK} = 5MHz	3	-	5.5	V
V_I	Control and SPI Inputs (nSLEEP, IN0, IN1, nSCS, SCLK, SDI)	0	-	5.5	V
T_A	Ambient temperature	-40	-	125	°C
T_J	Junction temperature	-40	-	150	°C

6.4 Thermal Information

THERMAL METRIC		PWP (HTSSOP) 24 PINS	UNIT
$R_{\theta JA}$	Junction-to-ambient thermal resistance	32.2	°C/W
$R_{\theta JC(top)}$	Junction-to-case (top) thermal resistance	27.5	°C/W
$R_{\theta JB}$	Junction-to-board thermal resistance	12.5	°C/W
Ψ_{JT}	Junction-to-top characterization parameter	1.3	°C/W
Ψ_{JB}	Junction-to-board characterization parameter	12.5	°C/W
$R_{\theta JC(bot)}$	Junction-to-case (bottom) thermal resistance	5.7	°C/W

Copyright © 2025 Texas Instruments Incorporated

6.5 Electrical Characteristics

V_{DD} = 3V to 5.5V, V_M = 4V to 40V, T_J = -40 °C to +150 °C (unless otherwise noted)

Typical values: V_{DD} = 5V, V_M = 13.5V, T_J = 25 °C

PARAMETER		TEST CONDITIONS		MIN	TYP	MAX	UNIT
POWER SUPPLY (V_M, V_{DD})							
V_{M_OP}	VM minimum operating voltage	ENx = 1b, from UVRVM = 1b to V_{DS} ≤ 1V, R_L = 50Ω				4	V
V_{DD_OP}	VDD operating voltage	f_{SCLK} = 5MHz		3		5.5	V
V_{MDIFF}	Voltage difference between V_M and V_{DD}				200		mV
I_{VM_SLEEP}	Analog supply current in sleep mode	nSLEEP, IN0, IN1 floating, V_M = 5V to 28V, nSCS = VDD	T_J ≤ 85 °C		0.6	3	µA
		nSLEEP, IN0, IN1 floating, nSCS = VDD	T_J = 150 °C		0.9	20	
I_{VDD_SLEEP}	Logic supply current in sleep mode	nSLEEP, IN0, IN1 floating, nSCS = VDD	T_J ≤ 85 °C		0.1	1	µA
			T_J = 150 °C		0.7	4	
I_{SLEEP}	Overall current consumption in Sleep mode	nSLEEP, IN0, IN1 floating, V_M = 5V to 28V, nSCS = VDD	T_J ≤ 85 °C			4	µA
		nSLEEP, IN0, IN1 floating, nSCS = VDD	T_J = 150 °C			24	µA
I_{VM_IDLE}	Analog supply current in Idle mode	nSLEEP = logic high, IN0, IN1 floating, f_{SCLK} = 0MHz, ACT = 0b, ENx = 0b, IOLx = 0b, nSCS = VDD				2.1	mA
			COR mode, V_M ≤ V_{DD} - 1V			0.3	mA
I_{VDD_IDLE}	Logic supply current in Idle mode	nSLEEP = logic high, IN0, IN1 floating, f_{SCLK} = 0MHz, ACT = 0b, ENx = 0b, nSCS = VDD				0.1	mA
			COR mode, V_M ≤ V_{DD} - 1V			1.9	
I_{IDLE}	Overall current consumption in Idle mode	nSLEEP = logic high, IN0, IN1 floating, f_{SCLK} = 0MHz, ACT = 0b, ENx = 0b, IOLx = 0b, nSCS = VDD				2.2	mA
$I_{VM_ACT_OFF}$	Analog supply current in Active mode - channels OFF	nSLEEP = logic high, IN0, IN1 floating, f_{SCLK} = 0MHz, ACT = 1b, ENx = 0b, IOLx = 0b, nSCS = VDD				4.6	mA
			COR mode, V_M ≤ V_{DD} - 1V		1	2.3	mA
$I_{VM_ACT_ON}$	Analog supply current in Active mode - channels ON	nSLEEP = logic high, IN0, IN1 floating, f_{SCLK} = 0MHz, ACT = 1b, ENx = 1b, IOLx = 0b, nSCS = VDD	EN_OLON = 0100b			4.6	mA
			COR mode, V_M ≤ V_{DD} - 1V		1	2.3	mA

Copyright © 2025 Texas Instruments Incorporated

6.5 Electrical Characteristics (continued)

V_{DD} = 3V to 5.5V, V_M = 4V to 40V, T_J = -40 °C to +150 °C (unless otherwise noted)

Typical values: V_{DD} = 5V, V_M = 13.5V, T_J = 25 °C

PARAMETER		TEST CONDITIONS		MIN	TYP	MAX	UNIT
$I_{VDD_ACT_OFF}$	Logic supply current in Active mode - channels OFF	nSLEEP = logic high, IN0, IN1 floating, f_{SCLK} = 0MHz, ACT = 1b, ENx = 0b, nSCS = VDD				0.1	mA
			COR mode, $V_M \le V_{DD}$ - 1V			2.4	mA
$I_{VDD_ACT_ON}$	Logic supply current in Active mode - channels ON	nSLEEP = logic high, IN0, IN1 floating, f_{SCLK} = 0MHz, ACT = 1b, ENx = 1b, nSCS = VDD				0.1	mA
			COR mode, IOLx = 0b, EN_OLON = 0100b, $V_M \le V_{DD}$ - 1V			2.4	mA
I_{ACT_OFF}	Overall current consumption in Active mode - channels OFF	nSLEEP = logic high, IN0, IN1 floating, f_{SCLK} = 0MHz, ACT = 1b, ENx = 0b, IOLx = 0b, nSCS = VDD				4.7	mA
I_{ACT_ON}	Overall current consumption in Active mode - channels ON	nSLEEP = logic high, IN0, IN1 floating, f_{SCLK} = 0MHz, ACT = 1b, ENx = 1b, IOLx = 0b, EN_OLON = 0100b, nSCS = VDD				4.7	mA
t_{S2I}	Sleep to Idle delay	From nSLEEP pin to TER + INST register = 8680H			200	300	µs
t_{I2S}	Idle to Sleep delay	From nSLEEP pin to standard diagnosis = 0000H, external pull-down from SDO to GND			100	150	µs
t_{I2A}	Idle to Active delay	From INx or nSCS pins to MODE = 10b			100	150	µs
t_{A2I}	Active to Idle delay	From INx or nSCS pins to MODE = 11b			100	150	µs
t_{S2LH}	Sleep to Limp Home delay	From INx pins to V_{DS} = 10% V_M			300 + t_{ON}	450 + t_{ON}	µs
t_{LH2S}	Limp Home to Sleep delay	From INx pins to standard diagnosis = 0000H, external pull-down from SDO to GND			200 + t_{OFF}	300 + t_{OFF}	µs
t_{LH2A}	Limp Home to Active delay	From nSLEEP pin to MODE = 10b			50	100	µs
t_{A2LH}	Active to Limp Home delay	From nSLEEP pin to TER + INST register = 8683H (IN0 = IN1 = logic high) or 8682H (IN1 = logic high, IN0 = logic low) or 8681H (IN1 = logic low, IN0 = logic high)			55	100	µs
t_{A2S}	Active to Sleep delay	From nSLEEP pin to standard diagnosis = 0000H, external pull-down from SDO to GND			50	100	µs
CONTROL AND SPI INPUTS (nSLEEP, IN0, IN1, nSCS, SCLK, SDI)							
V_{IL}	Input logic low voltage			0		0.8	V
V_{IH}	Input logic high voltage (nSLEEP, IN0, IN1)			2		5.5	V

Copyright © 2025 Texas Instruments Incorporated

6.5 Electrical Characteristics (continued)

V_{DD} = 3V to 5.5V, V_M = 4V to 40V, T_J = -40 °C to +150 °C (unless otherwise noted)

Typical values: V_{DD} = 5V, V_M = 13.5V, T_J = 25 °C

PARAMETER		TEST CONDITIONS	MIN	TYP	MAX	UNIT
V_{IH_SPI}	Input logic high voltage (nSCS, SCLK, SDI)		2		V_{DD}	V
I_{IL}	Input logic low current (all pins except nSCS)	V_I = 0.8V	8	12	16	µA
I_{IH}	Input logic high current (all pins except nSCS)	V_I = 2V	20	30	40	µA
I_{IL_nSCS}	nSCS input logic low current	V_{nSCS} = 0.8V, V_{DD} = 5V	30	60	90	µA
I_{IH_nSCS}	nSCS input logic high current	V_{nSCS} = 2V, V_{DD} = 5V	10	40	65	µA
PUSH-PULL OUTPUT (SDO)						
V_{SDO_L}	Output logic low voltage	I_{SDO} = -1.5mA	0		0.4	V
V_{SDO_H}	Output logic high voltage	I_{SDO} = 1.5mA	V_{DD} - 0.4		V_{DD}	V
I_{SDO_OFF}	SDO tristate leakage current	V_{nSCS} = V_{DD}, V_{SDO} = 0V or V_{DD}	-0.5		0.5	µA
POWER STAGE						
$R_{DS(ON)}$	ON resistance	T_J = 25 °C	0.4	0.7	0.95	Ω
		T_J = 150 °C, I_L = I_{L_EAR} = 220mA	0.6	1	1.4	
I_{L_NOM}	Nominal load current (all channels active)	T_A = 85 °C, T_J ≤ 150 °C		330	500	mA
		T_A = 105 °C, T_J ≤ 150 °C		260	500	mA
I_{L_NOM}	Nominal load current (half of the channels active)	T_A = 85 °C, T_J ≤ 150 °C		470	500	mA
I_{L_EAR}	Load current for maximum energy dissipation - repetitive (all channels active)	T_A = 85 °C, T_J ≤ 150 °C		220		mA
$-I_{L_REV}$	Inverse current capability per channel (in High-Side operation)				I_{L_EAR}	mA
E_{AR}	Maximum energy dissipation repetitive pulses- 2*I_{L_EAR} (two channels in parallel)	$T_{J(0)}$ = 85 °C, $I_{L(0)}$ = 2*I_{L_EAR}, 2*10^6 cycles, PAR = 1b for affected channels			15	mJ
V_{DS_OP}	Power stage voltage drop at low battery	R_L = 50Ω, V_M = V_{M1} = V_{M2} = $V_{M_OP,max}$		0.05	0.2	V
V_{DS_OP}	Power stage voltage drop at low battery for high-side channels	R_L = 50Ω, V_M = $V_{M_OP,max}$, V_{M_HS} = $V_{M_OP,max}$		0.05	0.3	V
V_{OUT_CL}	Source to Ground Output clamping voltage for high-side channels	I_L = 20mA, V_M = V_{OUT_Dx} = 7V	-24		-18	V
I_{L_OFF}	Output leakage current (each auto-configurable or high-side channel)	V_{IN} = 0V or floating, V_{DS} = 28V, V_{OUT_S} = 1.5V, ENx = 0b, T_J ≤ 85 °C		0.3	4	µA
I_{L_OFF}	Output leakage current (each auto-configurable or high-side channel)	V_{IN} = 0V or floating, V_{DS} = 28V, V_{OUT_S} = 1.5V, ENx = 0b, T_J = 150 °C		0.3	3	µA
t_{DLY_ON}	Turn-ON delay (from INx pin or bit to V_{OUT} = 10% V_M	R_L = 50Ω, V_M = 13.5V, Active mode or Limp Home mode	2	5	8	µs

Copyright © 2025 Texas Instruments Incorporated

6.5 Electrical Characteristics (continued)

V_{DD} = 3V to 5.5V, V_M = 4V to 40V, T_J = -40 °C to +150 °C (unless otherwise noted)

Typical values: V_{DD} = 5V, V_M = 13.5V, T_J = 25 °C

PARAMETER		TEST CONDITIONS	MIN	TYP	MAX	UNIT
t_{DLY_OFF}	Turn-OFF delay (from INx pin or bit to V_{OUT} = 90% V_M	R_L = 50Ω, V_M = 13.5V, Active mode or Limp Home mode	3	6	11	µs
t_{ON}	Turn-ON time (from INx pin or bit to V_{OUT} = 90% V_M	R_L = 50Ω, V_M = 13.5V, Active mode or Limp Home mode	9	16	23	µs
t_{OFF}	Turn-OFF time (from INx pin or bit to V_{OUT} = 10% V_M	R_L = 50Ω, V_M = 13.5V, Active mode or Limp Home mode	11	17	25	µs
t_{ON} - t_{OFF}	Turn-ON/OFF matching	R_L = 50Ω, V_M = 13.5V, Active mode or Limp Home mode	-10	0	10	µs
SR_{ON}	Turn-ON slew rate, V_{DS} = 30% to 70%	R_L = 50Ω, V_M = 13.5V, Active mode or Limp Home mode, SR = 0b	0.6	1.3	1.8	V/µs
		R_L = 50Ω, V_M = 13.5V, Active mode or Limp Home mode, SR = 1b	1.3	2.5	3.6	V/µs
SR_{OFF}	Turn-OFF slew rate, V_{DS} = 70% to 30% V_M	R_L = 50Ω, V_M = 13.5V, Active mode or Limp Home mode, SR = 0b	0.6	1.3	1.8	V/µs
		R_L = 50Ω, V_M = 13.5V, Active mode or Limp Home mode, SR = 1b	1.3	2.5	3.6	V/µs
t_{INRUSH}	Bulb inrush mode restart time	Active Mode			40	µs
t_{BIM}	Bulb inrush mode reset time	Active Mode		40		ms
f_{INT}	Internal reference frequency	FPWM = 1000b	80	102	125	kHz
f_{INT_VAR}	Internal reference frequency variation		-15		15	%
t_{SYNC}	Internal reference frequency synchronization time	FPWM = 1000b		7	10	µs
PROTECTION						
$V_{M_UVLO_F}$	VM undervoltage shutdown (falling)	ENx = ON, from V_{DS} ≤ 1V to UVRVM = 1b, R_L = 50Ω	2.64	2.73	2.82	V
$V_{M_UVLO_R}$	VM undervoltage shutdown (rising)		2.77	2.86	2.95	V
V_{DD_UVLO}	VDD undervoltage shutdown	V_{SDI} = V_{SCLK} = V_{nSCS} = 0V, SDO from low to Hi-Z	2.5	2.65	2.8	V
V_{DD_HYS}	VDD undervoltage shutdown hysteresis			120		mV
I_{L_OCP0}	Overcurrent protection threshold, OCP = 0b	T_J = -40 °C	1.3	1.5	1.8	A
		T_J = 25 °C	1.3	1.45	1.7	A
		T_J = 150 °C	1.2	1.4	1.6	A
I_{L_OCP1}	Overcurrent protection threshold, OCP = 0b	T_J = -40 °C	0.7	0.8	1	A
		T_J = 25 °C	0.65	0.75	0.9	A
		T_J = 150 °C	0.65	0.72	0.85	A

Copyright © 2025 Texas Instruments Incorporated

6.5 Electrical Characteristics (continued)

V_{DD} = 3V to 5.5V, V_M = 4V to 40V, T_J = -40 °C to +150 °C (unless otherwise noted)

Typical values: V_{DD} = 5V, V_M = 13.5V, T_J = 25 °C

PARAMETER		TEST CONDITIONS		MIN	TYP	MAX	UNIT
I_{L_OCP0}	Overcurrent protection threshold, OCP = 1b	T_J = -40 °C		2.2	2.5	3	A
		T_J = 25 °C		2.1	2.4	2.8	A
		T_J = 150 °C		1.9	2.1	2.4	A
I_{L_OCP1}	Overcurrent protection threshold, OCP = 1b	T_J = -40 °C		1	1.3	1.6	A
		T_J = 25 °C		1	1.3	1.55	A
		T_J = 150 °C		1	1.25	1.5	A
t_{OCPIN}	Overcurrent threshold switch delay time			70	170	260	µs
t_{OFF_OCP}	Overcurrent shut-down delay time	BIMx = PARx = 0b		4	7	11	µs
T_{OTW}	Overtemperature warning			120	140	160	°C
T_{HYS_OTW}	Overtemperature warning hysteresis				12		°C
T_{TSD}	Thermal shut-down temperature			150	175	200	°C
V_{M_AZ}	Over voltage protection	I_{VM} = 10mA, Sleep mode		42	47	52	V
R_{DS_REV}	On-State Resistance during Reverse Polarity	V_M = -V_{M_REV}, I_L = I_{L_EAR}	T_J = 25 °C		0.7		Ω
			T_J = 150 °C		1.1		Ω
t_{RETRY0_LH}	Restart time in Limp Home mode			7	10	13	ms
t_{RETRY1_LH}	Restart time in Limp Home mode			14	20	26	ms
t_{RETRY2_LH}	Restart time in Limp Home mode			28	40	52	ms
t_{RETRY3_LH}	Restart time in Limp Home mode			56	80	104	ms
t_{OSM}	Output Status Monitor comparator settling time					20	µs
V_{OSM}	Output Status Monitor threshold voltage			3	3.3	3.6	V
I_{OL}	Output diagnosis current	V_{OUT_S} = 3.3V , VM = 13.5V		60	75	95	µA
I_{OL}	Output diagnosis current	V_{OUT_S} = 3.3V , VM = 5V to 28V		50	75	100	µA
R_{OL}	Open Load equivalent resistance	VM = 13.5V		110		160	kΩ
R_{OL}	Open Load equivalent resistance	VM = 7V to 18V		30		230	kΩ
t_{ONMAX}	Open Load at ON Diagnosis waiting time before mux activation	OLMAX = 0b		40	60	85	µs
$t_{OLONSET}$	Open Load at ON Diagnosis settling time				25	40	µs
t_{OLONSW}	Open Load at ON Diagnosis channel switching time				15	20	µs

Copyright © 2025 Texas Instruments Incorporated

6.5 Electrical Characteristics (continued)

V_{DD} = 3V to 5.5V, V_M = 4V to 40V, T_J = -40 °C to +150 °C (unless otherwise noted)

Typical values: V_{DD} = 5V, V_M = 13.5V, T_J = 25 °C

PARAMETER		TEST CONDITIONS	MIN	TYP	MAX	UNIT
I_{L_OL}	Open Load detection threshold current		3	6	9	mA

6.6 SPI Timing Requirements

- Not subject to production test, verified by design

PARAMETER		TEST CONDITIONS	MIN	NOM	MAX	UNIT
t_{nSCS_lead}	Enable lead time (falling nSCS to rising SCLK)		200			ns
t_{nSCS_lag}	Enable lag time (falling SCLK to rising nSCS)		200			ns
t_{nSCS_td}	Transfer delay time (rising nSCS to falling nSCS)		250			ns
t_{SDO_en}	Output enable time (falling nSCS to SDO valid)	C_L = 20pF at SDO pin			200	ns
t_{SDO_dis}	Output disable time (rising nSCS to SDO Hi-z)	C_L = 20pF at SDO pin			200	ns
f_{SCLK}	Serial clock frequency				5	MHz
t_{SCLK_P}	Serial clock period		200			ns
t_{SCLK_H}	Serial clock logic high time		75			ns
t_{SCLK_L}	Serial clock logic low time		75			ns
t_{SDI_su}	Data setup time (required time SDI to falling SCLK)		20			ns
t_{SDI_h}	Data hold time (falling SCLK to SDI)		20			ns
t_{SDO_v}	Output data valid time with capacitive load	C_L = 20pF at SDO pin			100	ns

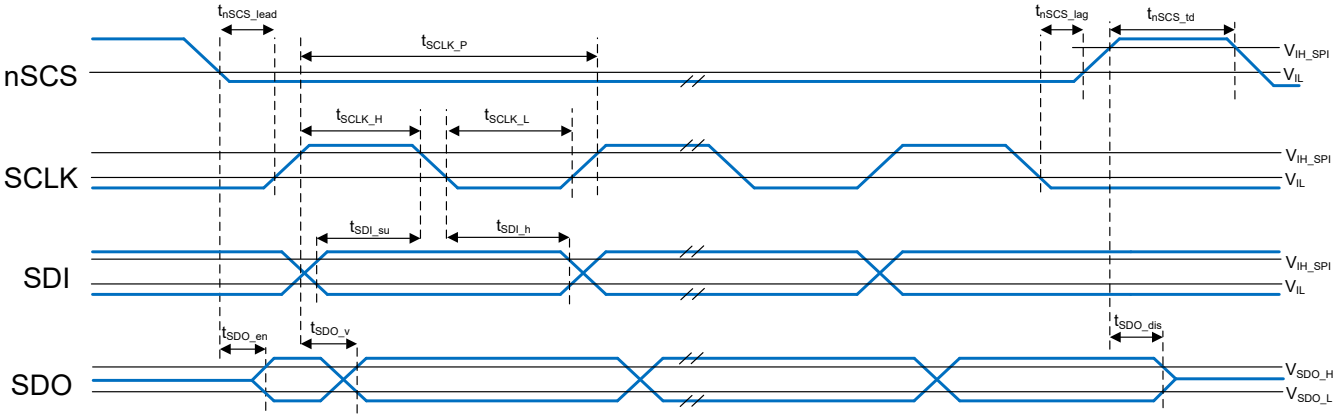

Figure 6-1. SPI Timing Diagram

6.7 Typical Characteristics

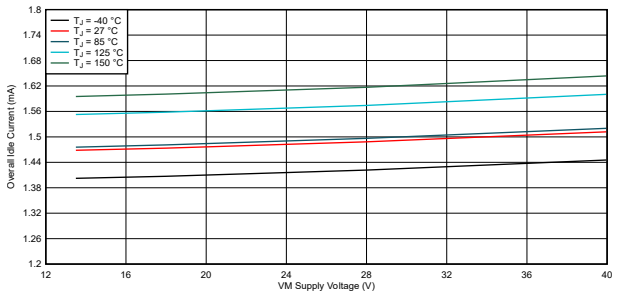

Figure 6-2. Idle mode supply current, VDD = 5.5V

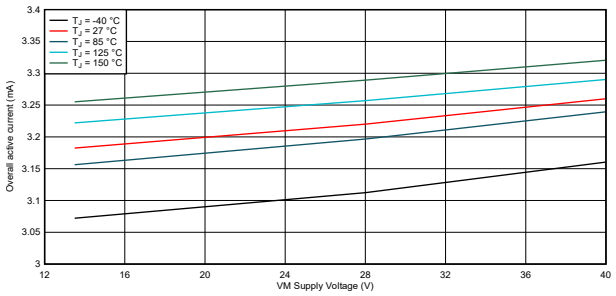

Figure 6-3. Active mode supply current, VDD = 5.5V

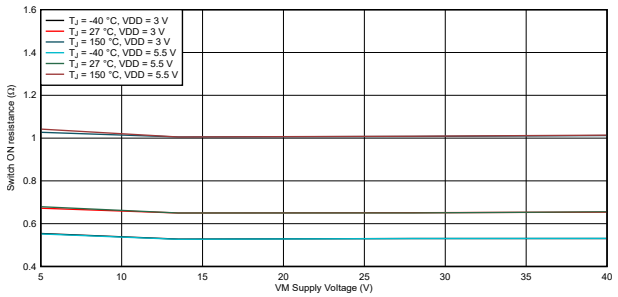

Figure 6-4. Switch ON Resistance

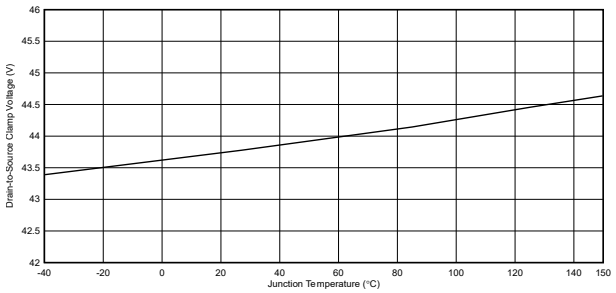

Figure 6-5. Drain-to-Source Clamp Voltage

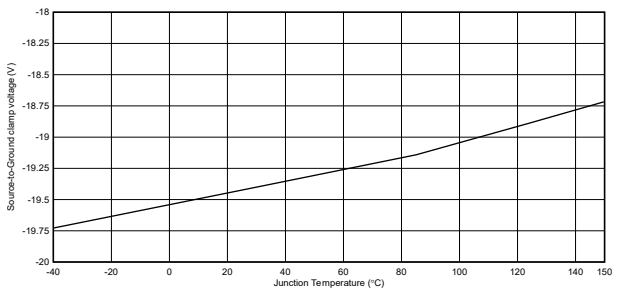

Figure 6-6. Source-to-Ground Clamp Voltage

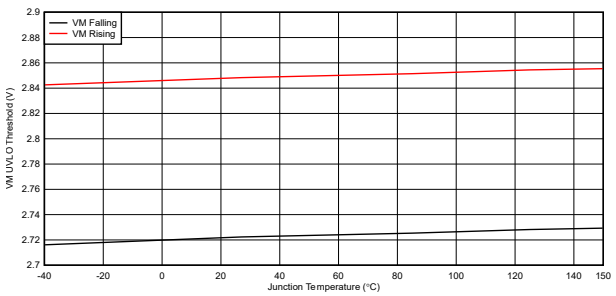

Figure 6-7. VM UVLO Threshold

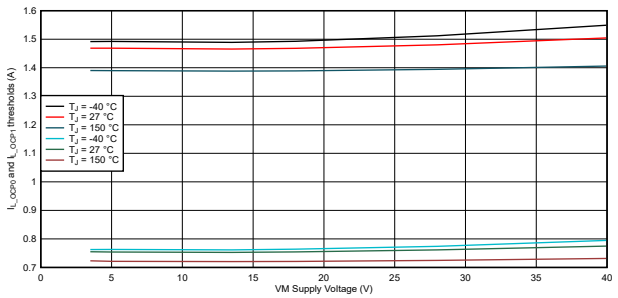

Figure 6-8. Overcurrent Protection Threshold, VDD = 5.5V, OCP = 0b

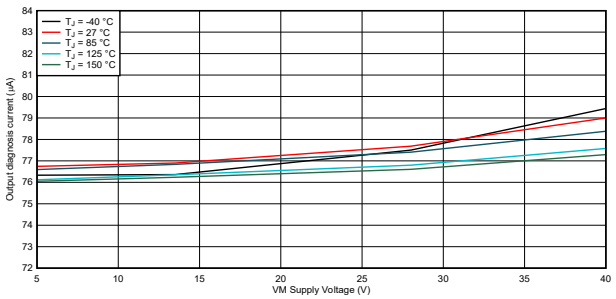

Figure 6-9. Output Diagnosis Current, VDD = 5.5V

Copyright © 2025 Texas Instruments Incorporated

6.7 Typical Characteristics (continued)

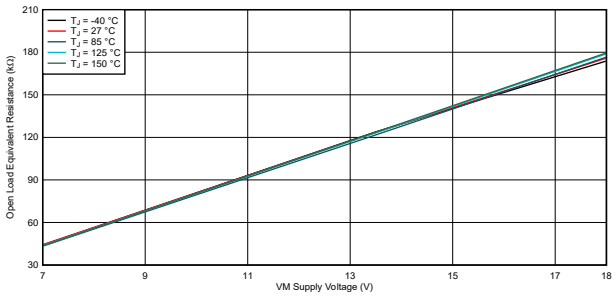

Figure 6-10. Open Load Equivalent Resistance

7 Detailed Description

7.1 Overview

The DRV81080-Q1 is an eight channel high-side switch with integrated protection and diagnostic functions. The output stages include eight high-side switches (typical $R_{DS(ON)}$ at T_J = 25 °C is 700mΩ). The power transistors are built by N-channel MOSFETs with one charge pump . The device is designed for low-supply voltage operation. The device can keep the state at a low battery voltage (V_M ≥ 3V).

The 16-bit SPI is used to control and diagnose the device and the loads. The SPI supports a daisy chain to connect multiple devices (also devices with 8-bit SPI) in one SPI chain by using the same microcontroller pins. The SPI feature is available only when the digital power supply is present.

The device has two input pins that are connected to two outputs. When the nSLEEP pin is logic low, activating channels 2 and 3 using the input pins independently from the availability of the digital supply voltage is possible. With the Input Mapping feature, connecting the input pins to different outputs, or assign more outputs to the same input pin is possible. In this case more channels can be controlled with one input signal.

The device provides diagnosis of the load via Open Load in ON and OFF state, and short circuit detection. For Open Load in OFF state detection, an internal current source I_{OL} can be activated via SPI. Each output stage is protected against short circuit. In case of Overcurrent, the affected channel switches OFF when the Overcurrent Detection threshold is reached and can be reactivated via SPI.

In Limp Home mode operation, the channels connected to an input pin set to logic high restart automatically after Output Restart time is elapsed. Temperature sensors are available for each channel to protect the device against Over Temperature.

Table 7-1. Product Summary

Parameter	Symbol	Values
Analog supply voltage	V_M	3.0V to 40V
Digital supply voltage	V_{DD}	3.0V to 5.5V
Minimum overvoltage protection	V_{M_AZ}	42V
Maximum on-state resistance at T_J = 150 °C	$R_{DS(ON)}$	1.4Ω
Nominal load current (T_A = 85 °C, all channels)	I_{L_NOM}	330mA
Maximum Energy dissipation - repetitive	E_{AR}	10mJ @ I_{L_EAR} = 220mA
Maximum Source to ground output clamping voltage	V_{OUT_CL}	-18V
Maximum overload switch OFF threshold	I_{L_OVL0}	
Maximum total quiescent current at T_J ≤ 85 °C	I_{SLEEP}	4µA
Maximum SPI clock frequency	f_{SCLK}	5MHz

Copyright © 2025 Texas Instruments Incorporated

7.2 Functional Block Diagram

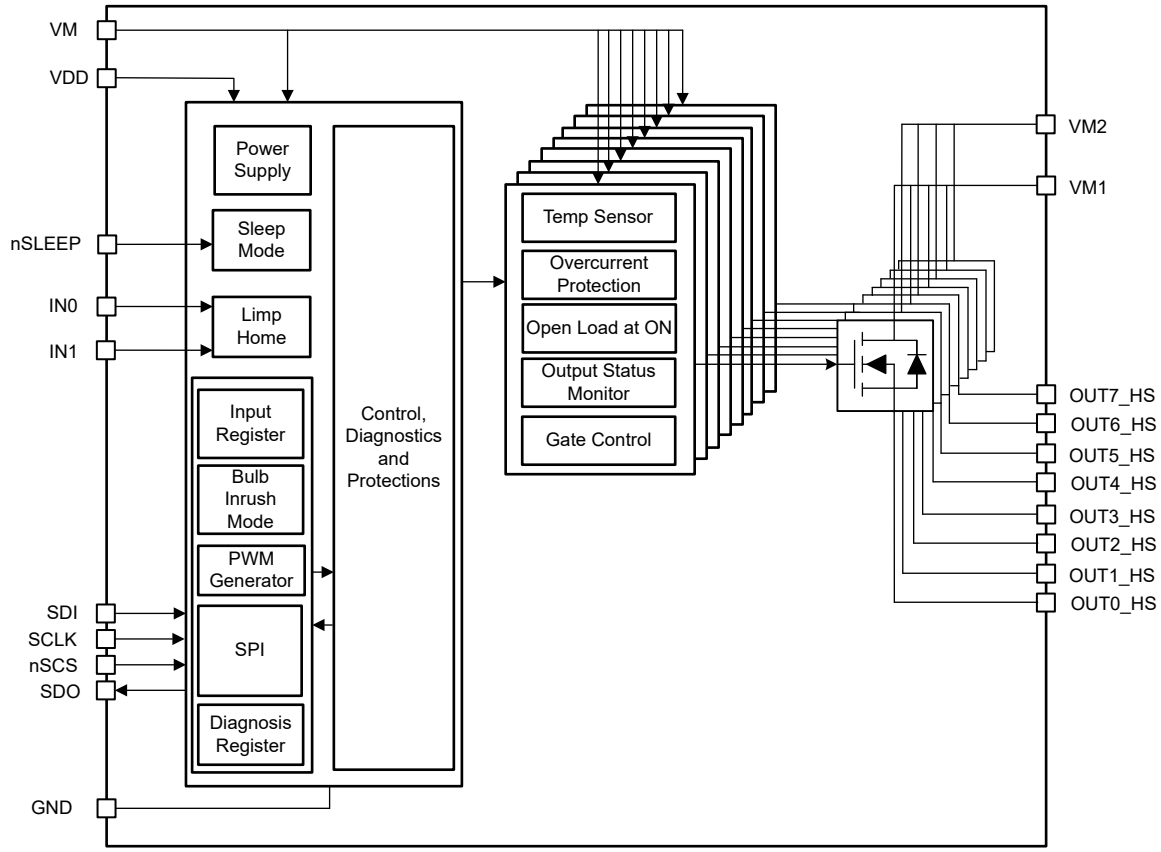

Figure 7-1. DRV81080-Q1 Functional Block Diagram

Copyright © 2025 Texas Instruments Incorporated

7.3 Feature Description

7.3.1 Control Pins

The device has three pins (IN0, IN1 and nSLEEP) to control the device directly without using SPI.

7.3.1.1 Input Pins

The device has two input pins. Each input pin is connected by default to one channel (IN0 to channel 2, IN1 to channel 3). Input Mapping Registers MAP0 and MAP1 can be programmed to connect additional or different channels to each input pin, as shown in Figure 7-2. The signals driving the channels are an OR combination between EN register status, PWM generators (according to PWM generator Output Mapping status), IN0 and IN1 (according to Input Mapping registers status).

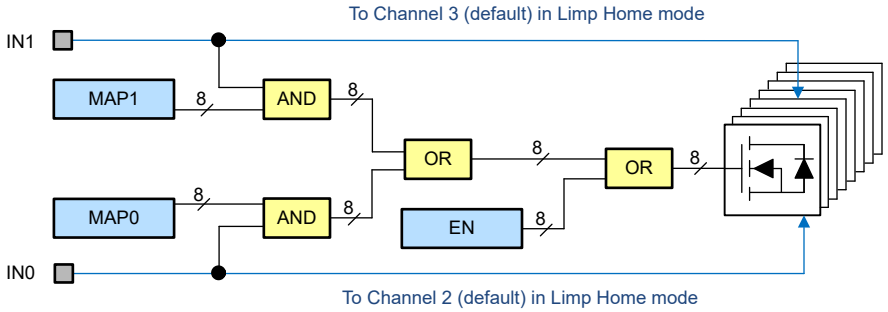

Figure 7-2. Input Mapping

The logic level of the input pins can be monitored using the Input Status Monitor Register (INST). The Input Status Monitor is operational also when the device is in Limp Home mode. If one of the Input pins is set to logic high and the nSLEEP pin is set to logic low, the device switches into Limp Home mode and activates the channel mapped by default to the input pins.

7.3.1.2 nSLEEP Pin

The nSLEEP pin is used to bring the device into Sleep mode when it is set to logic low and all input pins are also set to logic low. When nSLEEP pin is set to logic low while one of the input pins is set to logic high, the device enters Limp Home mode.

To ensure a proper mode transition, nSLEEP pin must be set for at least t_{I2S} (transition from logic high to logic low) or t_{S2I} (transition from logic low to logic high).

Setting the nSLEEP pin to logic low results in:

- All registers in the SPI are reset to default values.
- V_{DD} and V_M Undervoltage detection circuits are disabled to decrease current consumption (if both inputs are set to logic low).
- No SPI communication is allowed (SDO pin remains in high impedance also when nSCS pin is set to logic low) if both input pins are set to logic low.

Copyright © 2025 Texas Instruments Incorporated

7.3.2 Power Supply

The DRV81080-Q1 is supplied by four supply voltages:

- V_M (analog supply voltage used also for the logic)
- V_{M1} (analog supply voltage used as drain for channels 0, 2, 4 and 6)
- V_{M2} (analog supply voltage used as drain for channels 1, 3, 5 and 7)
- V_{DD} (digital supply voltage)

The V_M supply is connected to a battery feed and used, in combination with V_{DD} supply, for the driving circuitry of the power stages. In situations where V_M voltage drops below V_{DD} voltage (for example during cranking events down to 3V), an increased current consumption can be observed at VDD pin. V_M and V_{DD} supply voltages have an undervoltage detection circuit.

- An undervoltage on both V_M and V_{DD} supply voltages prevents the activation of the power stages and any SPI communication (the SPI registers are reset)
- An undervoltage on V_{DD} supply prevents any SPI communication. SPI read/write registers are reset to default values.
- An undervoltage on V_M supply forces the device to drain all needed current for the logic from V_{DD} supply. All channels are disabled, and are enabled again as soon as $V_M \geq V_{M_OP}$.

The image below shows a basic concept drawing of the interaction between supply pins V_M and V_{DD}, the output stage drivers and SDO supply line.

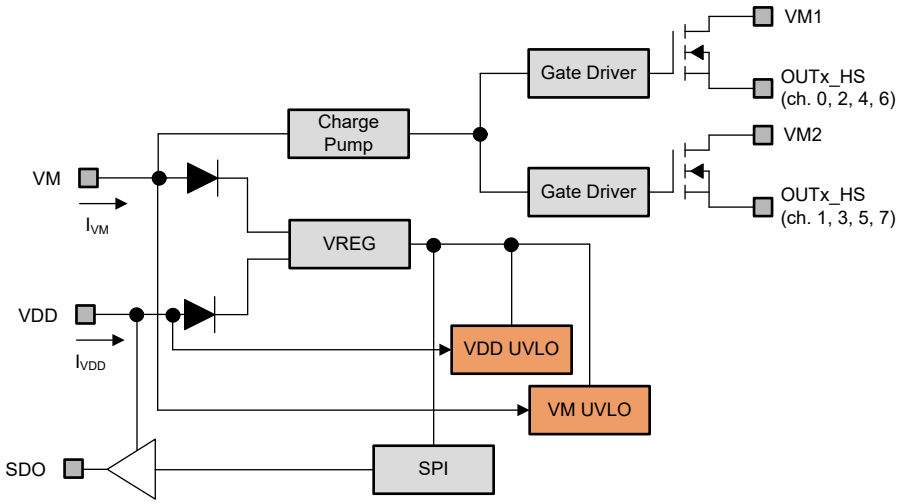

Figure 7-3. Internal Power Supply Architecture

When 3V ≤ V_M ≤ V_{DD} - V_{MDIFF}, the device operates in Cranking Operative Range (COR). In this condition, the current consumption from VDD pin increases while current consumption decreases from VM pin. Total current consumption remains within the specified limits.

Figure 7-4 shows the voltage levels at VM pin where the device goes in and out of COR. During the transition to and from COR, I_{VM} and I_{VDD} change between values defined for normal operation and for COR operation. The sum of both current remains within limits specified in Section 6.5.

Copyright © 2025 Texas Instruments Incorporated

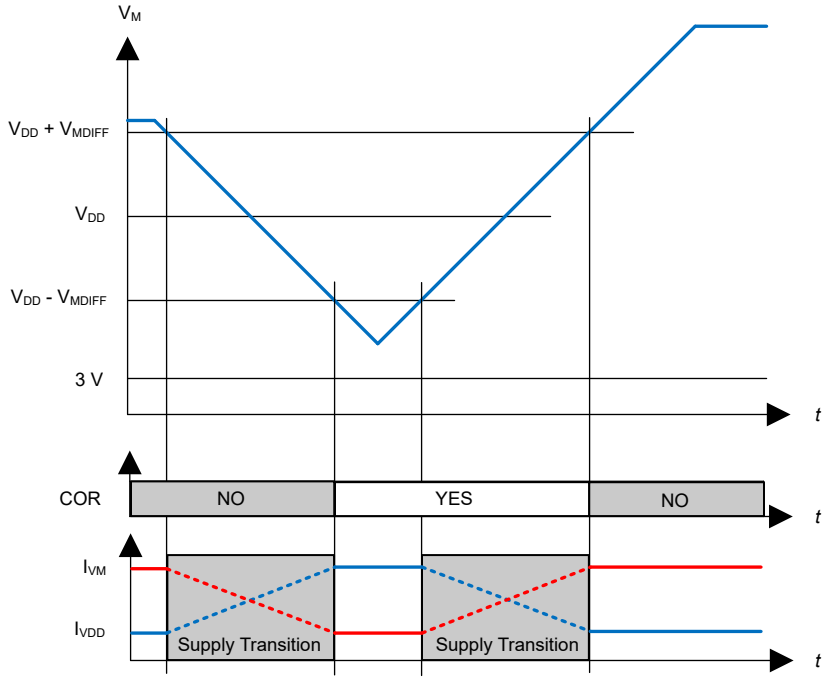

Figure 7-4. Cranking Operative Range

When $V_{M_UVLO} \le V_M \le V_{M_OP}$, it may be not possible to switch ON a channel that was previously OFF. All channels that are already ON keep the state unless the channels are switched OFF via SPI or via IN pins. An overview of channel behavior according to different V_M and V_{DD} supply voltages is shown in Table 7-2, Table 7-3 and Table 7-4 (the tables are valid after a successful power-up).

Table 7-2. Channel Control as Function of V_M and V_{DD}

	$V_{DD} \le V_{DD_UVLO}$	$V_{DD} > V_{DD_UVLO}$
$V_M \le 3V$	Channels cannot be controlled	Channels can be switched ON and OFF (SPI control)($R_{DS(ON)}$ deviations possible)
$3V < V_M \le V_{M_OP}$	Channels cannot be controlled by SPI	Channels can be switched ON and OFF (SPI control)($R_{DS(ON)}$ deviations possible)
$V_M > V_{M_OP}$	Channels cannot be controlled by SPI	Channels can be switched ON and OFF

Table 7-3. Limp Home Mode as Function of V_M and V_{DD}

	$V_{DD} \le V_{DD_UVLO}$	$V_{DD} > V_{DD_UVLO}$
$V_M \le 3V$	Not available	Available ($R_{DS(ON)}$ deviations possible)
$3V < V_M \le V_{M_OP}$	Available ($R_{DS(ON)}$ deviations possible)	Available ($R_{DS(ON)}$ deviations possible)
$V_M > V_{M_OP}$	Available	Available

Table 7-4. SPI Registers and SPI Communication as Function of V_M and V_{DD}

	$V_{DD} \le V_{DD_UVLO}$	$V_{DD} > V_{DD_UVLO}$
SPI Registers	Reset	Available
SPI Communication	Not available (f_{SCLK} = 0MHz)	Possible (f_{SCLK} = 5MHz)

Copyright © 2025 Texas Instruments Incorporated

7.3.2.1 Modes of Operation

The device has the following operation modes:

- Sleep mode
- Idle mode
- Active mode
- Limp Home mode

The transition between operation modes is determined according to following levels and states:

- nSLEEP pin logic level
- INx pins logic level
- ENx bits state
- ACT bit state
- EN_PWM0 and EN_PWM1 bits state

The state diagram including the possible transitions is shown in Figure 7-5. The behavior of the device as well as some parameters can change according to the operation mode of the device. Also, due to the undervoltage detection circuitry, some changes within the same operation mode can be seen.

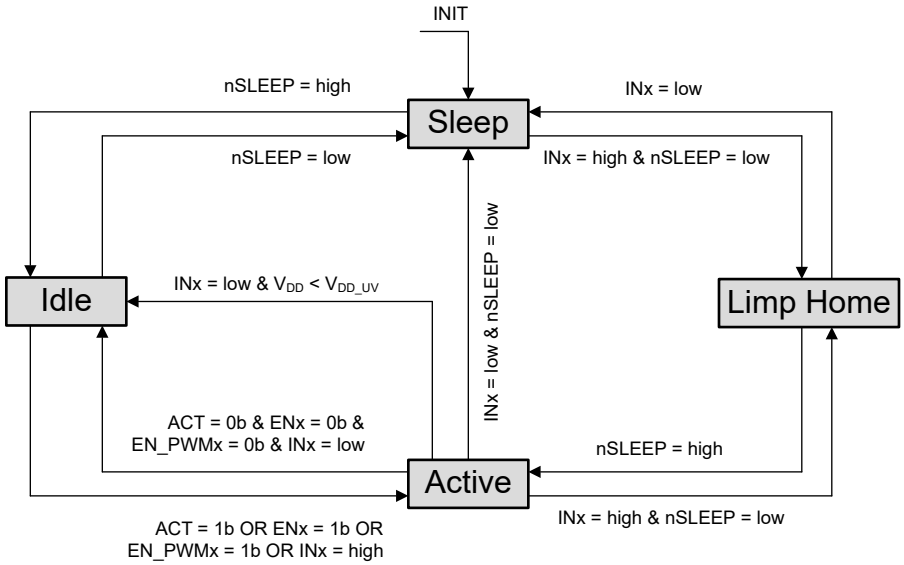

Figure 7-5. Mode of Operation State Diagram

The operation mode of the device can be observed by:

- Status of output channels
- Status of SPI registers
- Current consumption at VDD pin (I_{VDD})
- Current consumption at VM pin (I_{VM})

The default operation mode to switch ON the loads is Active mode. If the device is not in Active mode and a request to switch ON one or more outputs comes (via SPI or via Input pins), the device switches into Active or Limp Home mode, according to nSLEEP pin status.

The channel turn-ON time is as defined by parameter t_{ON} when the device is in Active mode or in Limp Home mode. In all other cases, adding the transition time required to reach one of the two aforementioned Power Supply modes (as shown in Figure 7-6) is necessary.

Copyright © 2025 Texas Instruments Incorporated

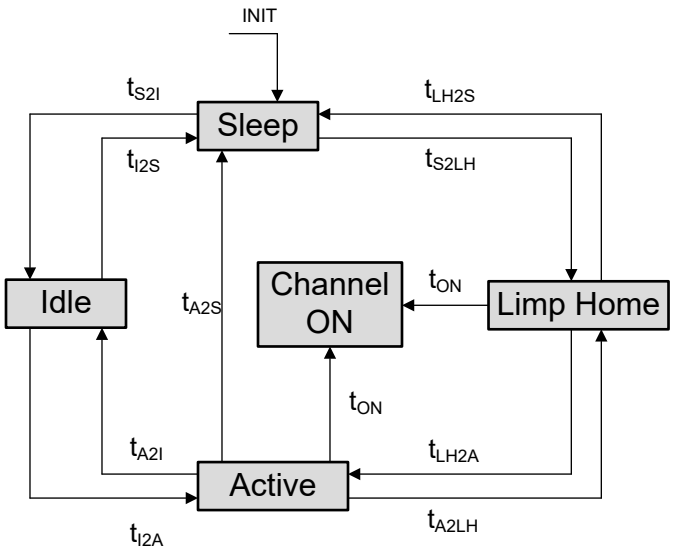

Figure 7-6. Mode Transition Timing

Table 7-5 shows the correlation between device operation modes, V_M and V_{DD} supply voltages, and state of the most important functions (channel control, SPI communication and SPI registers).

Table 7-5. Device function in Relation to Operation Modes, V_M and V_{DD} Voltages

Modes of Operation	Function	V_M UVLO, $V_{DD} \le V_{DD_UVLO}$	V_M UVLO, $V_{DD} > V_{DD_UVLO}$	V_M not in UVLO, $V_{DD} \le V_{DD_UVLO}$	V_M not in UVLO, $V_{DD} > V_{DD_UVLO}$
Sleep	Channels	Not available	Not available	Not available	Not available
	SPI comm.	Not available	Not available	Not available	Not available
	SPI registers	Reset	Reset	Reset	Reset
Idle	Channels	Not available	Not available	Not available	Not available
	SPI comm.	Not available	Yes	Not available	Yes
	SPI registers	Reset	Yes	Reset	Yes
Active	Channels	Not available	Yes	Yes, IN pins only	Yes
	SPI comm.	Not available	Yes	Not available	Yes
	SPI registers	Reset	Yes	Reset	Yes
Limp Home	Channels	Not available	Yes, IN pins only	Yes, IN pins only	Yes, IN pins only
	SPI comm.	Not available	Yes, read-only	Not available	Yes, read-only
	SPI registers	Reset	Yes, read-only	Reset	Yes, read-only

7.3.2.1.1 Power-up

The Power-up condition is satisfied when one of the supply voltages (V_M or V_{DD}) is applied to the device and the INx or nSLEEP pins are set to logic high. If V_M is above the threshold V_{M_OP} or if V_{DD} is above the UVLO threshold, the internal power-on signal is set.

7.3.2.1.2 Sleep mode

When the device is in Sleep mode, all outputs are OFF and the SPI registers are reset, independently from the supply voltages. The current consumption is minimum.

7.3.2.1.3 Idle mode

In Idle mode, the current consumption of the device can reach the limits given by parameters I_{VDD_IDLE} and I_{VM_IDLE}, or by parameter I_{IDLE} for the whole device.

Copyright © 2025 Texas Instruments Incorporated

- The internal voltage regulator is working in this mode.
- Diagnosis functions are not available.
- The output channels are switched OFF, independently from the supply voltages.
- When V_{DD} is available, the SPI registers are working and SPI communication is possible.
- In Idle mode the ERRx bits are not cleared for functional safety reasons.

7.3.2.1.4 Active Mode

Active mode is the normal operation mode of the device when no Limp Home condition is set and driving some or all loads is necessary. Voltage levels of V_{DD} and V_M influence the behavior as described in Table 7-5. Device current consumption is specified with I_{VDD_ACT} and I_{VM_ACT} (I_{ACT} for the whole device).

The device enters Active mode when nSLEEP pin is set to logic high and one of the input pins is set to logic high or one ENx bit is set to 1b

- If ACT bit is set to 0b, the device returns to Idle mode as soon as all inputs pins are set to logic low and ENx bits are set to 0b.
- If ACT is set to 1b, the device remains in Active mode independently of the status of input pins and ENx bits.
- An undervoltage condition on V_{DD} supply brings the device into Idle mode, if all input pins are set to logic low.

Even if the registers MAP0 and MAP1 are both set to 00H but one of the input pins INx is set to logic high, the device goes into Active mode.

7.3.2.1.5 Limp Home Mode

The device enters Limp Home mode when nSLEEP pin is logic low and one of the input pins is set to logic high, switching ON the channel connected to the device. SPI communication is possible but only in read-only mode (SPI registers can be read but cannot be written).

- UVRVM is set to 1b
- MODE bits are set to 01b (Limp Home mode)
- TER bit is set to 1b on the first SPI command after entering Limp Home mode. Afterwards the bit works normally.
- OLON and OLOFF bits are set to 0b
- ERRx bits work normally
- OSMx bits can be read and work normally
- All other registers are set to the default value and cannot be programmed as long as the device is in Limp Home mode

See Table 7-3 for a detailed overview of supply voltage conditions required to switch ON channels 2 and 3 during Limp Home. All other channels are OFF.

A transmission of SPI commands during transition from Active to Limp Home mode or Limp Home to Active mode can result in undefined SPI responses.

7.3.2.2 Reset condition

One of the following three conditions resets the SPI registers to the default value:

- V_{DD} is not present or below the undervoltage threshold V_{DD_UVLO}
- nSLEEP pin is set to logic low
- A reset command (RST set to 1b) is executed
  - ERRx bits are not cleared by a reset command (for functional safety)

In particular, all channels are switched OFF (if there are no input pin set to logic high) and the Input Mapping configuration is reset.

7.3.3 Power Stage

The DRV81080-Q1 is an eight channels high-side switch. The power stages are built by N-channel MOSFETs. The ON-state resistance $R_{DS(ON)}$ depends on the supply voltage as well as the junction temperature T_J.

Copyright © 2025 Texas Instruments Incorporated

The supply voltages V_{M1} and V_{M2} can be connected to any potential between ground and VM . A charge pump is connected to the output FET gate.

7.3.3.1 Switching Resistive Loads

When switching resistive loads the following switching times and slew rates should be considered.

The default slew rate is 1.3V/µs. The SR bit in configuration register 2 can be used to increase the slew rate to 2.5V/µs.

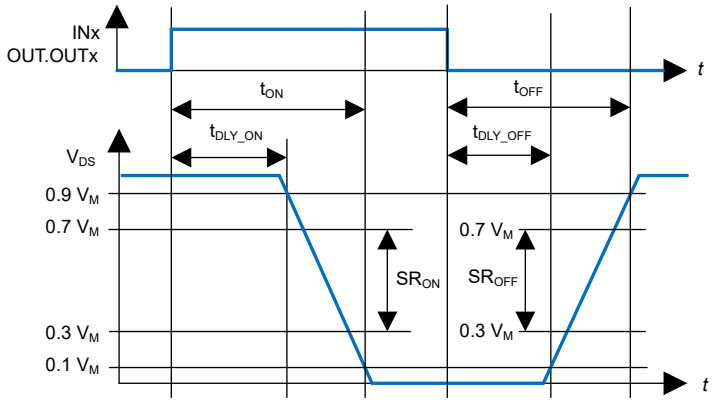

Figure 7-7. Switching a Resistive Load

7.3.3.2 Inductive Output Clamp

When switching off inductive loads, the voltage across the power switch rises to V_{DS_CL} potential, because the inductance intends to continue driving the current. The voltage at output pins is not allowed to go below . The voltage clamping is necessary to prevent device damage.

The following figure shows drawings of the clamp implementation. The maximum allowed load inductance is limited. The clamping structure protects the device in all operative modes (Sleep, Idle, Active, Limp Home).

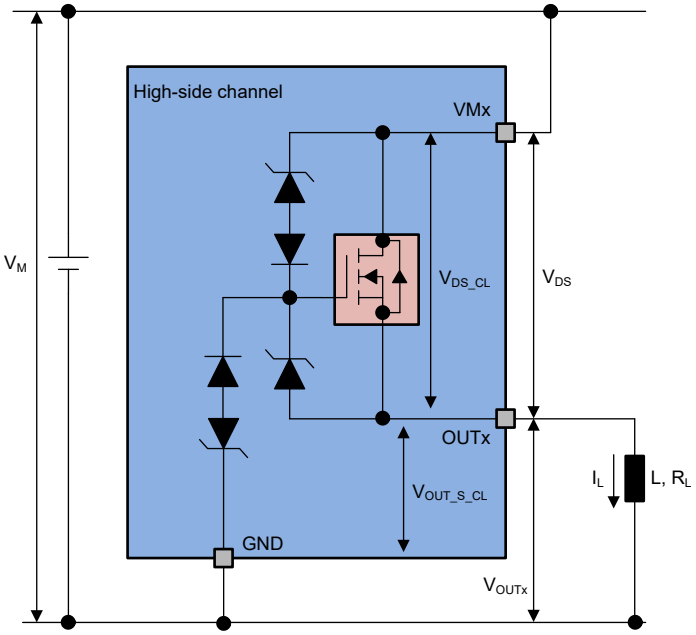

Figure 7-8. Output Clamp for high-side channel

Copyright © 2025 Texas Instruments Incorporated

7.3.3.3 Maximum Load Inductance

During demagnetization of inductive loads, magnetic energy is dissipated in the DRV81080-Q1. Equation 2 and Equation 3 can be used for high-side switches:

(1)

$$E = (V_M - V_{OUTS_CL}) \times \left[\frac{V_{OUTS_CL}}{R_L} \times \ln\left(1 - \frac{R_L \times I_L}{V_{OUTS_CL}}\right) + I_L\right] \times \frac{L}{R_L} \quad (2)$$

$$E = (V_M - V_{OUT_CL}) \times \left[\frac{V_{OUT_CL}}{R_L} \times \ln\left(1 - \frac{R_L \times I_L}{V_{OUT_CL}}\right) + I_L\right] \times \frac{L}{R_L} \quad (3)$$

The maximum energy, which is converted into heat, is limited by the thermal design of the component. The E_{AR} value provided in Section 6.5 assumes that all channels can dissipate the same energy when the inductances connected to the outputs are demagnetized at the same time.

7.3.3.4 Reverse Current Behavior

During reverse current (V_{OUTx_S} > V_{OUTx_D}) in high-side configuration or (V_{OUTx} > V_{Mx}), the affected channels stay in ON or in OFF state. Furthermore, during applied reverse currents the ERRx bit can be set if the channel is in ON state and the over temperature threshold is reached.

The general functionality (switch ON and OFF, protection, diagnostic) of unaffected channels is not influenced by reverse currents applied to other channels. Parameter deviations are possible especially for the following ones (Over Temperature protection is not influenced):

- Switching capability: t_{ON}, t_{OFF}, SR_{ON} , SR_{OFF}
- Protection: I_{L_OCP0}, I_{L_OCP1}
- Diagnostic: V_{DS_OL} , V_{OUT_OL} , $V_{OUT_S_OL}$, I_{L_OL}

Reliability in Limp Home condition for the unaffected channels is unchanged.

Note

No protection mechanism like temperature protection or over load protection is active during applied reverse currents. Reverse currents cause power losses inside the FET, which increase the overall device temperature. This can lead to a switch OFF of unaffected channels due to Over Temperature.

7.3.3.5 Switching Channels in parallel

In case of a short circuit with channels in parallel, it may happen that the two channels switch OFF asynchronously, therefore bringing an additional thermal stress to the channel that switches OFF last. In order to avoid this condition, it is possible to configure in the SPI registers the parallel operation of two neighbour channels (using PAR bits). When operating in this mode, the fastest channel to react to an OverLoad or Over Temperature condition will deactivate also the other channel. The inductive energy that two parallel channels can handle is lower than twice the single channel energy. It is possible to synchronize the following couple of channels together:

- channel 0 and channel 2 → PAR0 set to 1b
- channel 1 and channel 3 → PAR1 set to 1b
- channel 4 and channel 6 → PAR2 set to 1b
- channel 5 and channel 7 → PAR3 set to 1b

The synchronization bits influence only how the channels react to Overcurrent or Over Temperature conditions. Synchronized channels have to be switched ON and OFF individually by the microcontroller.

7.3.3.6 Bulb Inrush Mode (BIM)

Sometimes one or more of the outputs of the device need to drive capacitive loads such as lamps or electronic loads. In such scenarios, after the switch is turned ON, the inrush current can reach the overload current

Copyright © 2025 Texas Instruments Incorporated

threshold, thereby latching the channel OFF. In normal operation the device waits until the microcontroller sends an SPI command to clear the latches (CLRx bits) allowing the channel to turn ON again. Usually this delay is too long to start up the capacitive load.

If the corresponding bit BIMx is set to 1b, if the channel reaches the overload current or the overtemperature threshold and latches OFF, the channel restarts automatically after a time t_{INRUSH}, allowing the load to go out of the inrush phase. A time diagram is shown in Figure 7-9. As shown, the counter starts when the channel is switched ON. Every channel switch OFF (independently from the entity controlling the channel) resets BIMx to 0b.

While BIMx bits are set to 1b, ERRx bits can also set to 1b but this doesn't latch the channel OFF.

An internal timer sets the BIMx bits back to 0b after 40ms (parameter t_{BIM}) to prevent an excessive thermal stress to the channel, especially in case of short circuit at the output. The device allows a per-channel selection of Bulb Inrush Mode (BIM) to be flexible without any reliability risk.

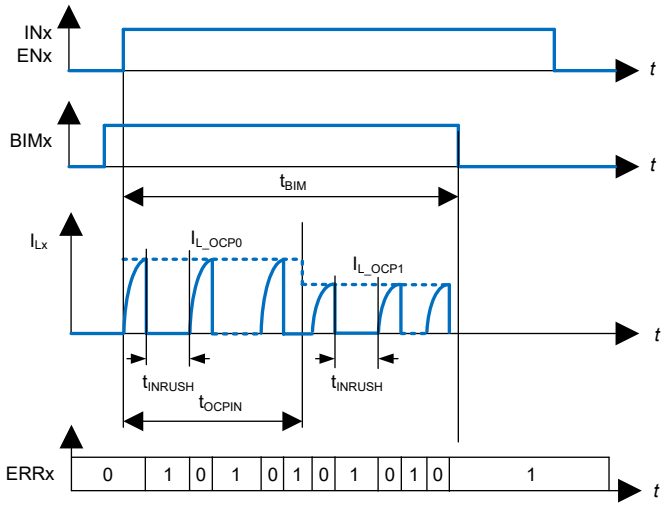

Figure 7-9. Bulb Inrush Mode (BIM) Operation

7.3.3.7 Integrated PWM Generator

The device has two independent integrated PWM generators. Each PWM generator can be assigned to one or more channels, and can be programmed with a different duty cycle and frequency.

Both PWM generators refer to a base frequency f_{INT} generated by an internal oscillator. This base frequency can be adjusted using FPWM bits as described below.

Table 7-6. FPWM Settings

FPWM Bits	Delta to f_{INT}
0000b	Reserved
0001b	-37.2%
0010b	-31.9%
0011b	-26.9%
0100b	-21%
0101b	-15.5%
0110b	-10.9%
0111b	-5.8%
1000b	-
1001b	+4.3%

Copyright © 2025 Texas Instruments Incorporated

Table 7-6. FPWM Settings (continued)

1010b	+8.9%
1011b	+14%
1100b	+19.5%
1101b	+25.6%
1110b	+32.4%
1111b	+40%

For each PWM generator, four parameters can be set:

- Duty cycle (bits DC0 for PWM Generator 0)
  - 8 bits are available to achieve 0.39% duty cycle resolution
  - When the micro-controller programs a new duty cycle, the PWM generator waits until the previous cycle is completed before using the new duty cycle (this happens also when the duty cycle is either 0% or100% - the new duty cycle is taken with the next PWM cycle)
  - The maximum duty cycle achievable is 99.61% (DC0 set to 11111111b). Achieving 100% is possible by setting FREQ0 to 11b.
- Frequency (bits FREQ0, FREQ1, FCTR0 and FCTR1 select the divider for f_{INT} to achieve the needed duty cycle)

Table 7-7. PWM Frequency Selection for PWM Generator 0

FCTR0	FREQ0	PWM Frequency
0b	00b	f_{INT}/1024 (corresponding to 100Hz)
0b	01b	f_{INT}/512 (corresponding to 200Hz)
0b	10b	f_{INT}/256 (corresponding to 400Hz)
1b	00b	f_{INT}/128 (corresponding to 800Hz)
1b	01b	f_{INT}/64 (corresponding to 1600Hz)
1b	10b	f_{INT}/51.2 (corresponding to 2000Hz)

Table 7-8. PWM Frequency Selection for PWM Generator 1

FCTR1	FREQ1	PWM Frequency
0b	00b	f_{INT}/1024 (corresponding to 100Hz)
0b	01b	f_{INT}/512 (corresponding to 200Hz)
0b	10b	f_{INT}/256 (corresponding to 400Hz)
1b	00b	f_{INT}/128 (corresponding to 800Hz)
1b	01b	f_{INT}/64 (corresponding to 1600Hz)
1b	10b	f_{INT}/51.2 (corresponding to 2000Hz)

- Channel output control and mapping registers PWM_OUT and MAP_PWM
  - Any channel can be mapped to each PWM Generator
  - Together with 2 parallel input having 4 independent PWM groups of channels with low effort from the point of view of micro-controller resources and SPI data traffic is possible.

Figure 7-10 expands the concept shown in adding the PWM Generators.

Copyright © 2025 Texas Instruments Incorporated

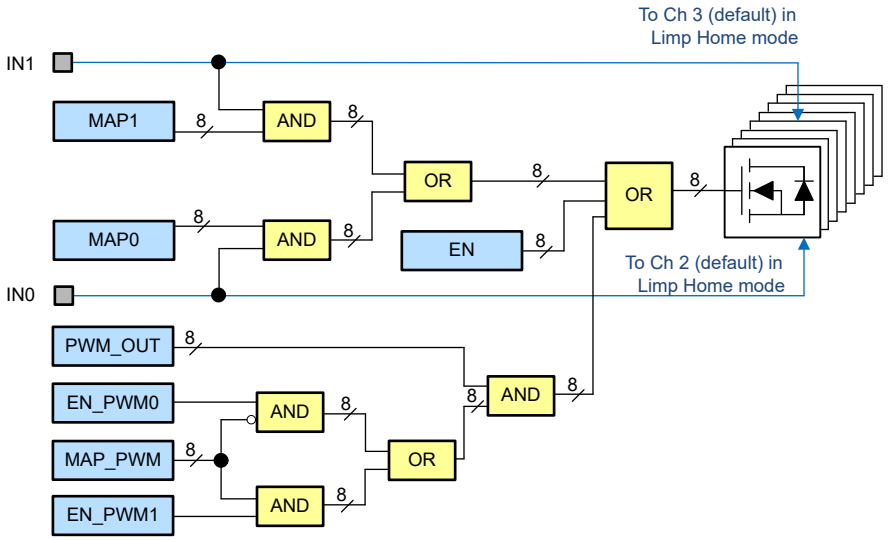

Figure 7-10. PWM Generator Mapping

Copyright © 2025 Texas Instruments Incorporated

7.3.4 Protection and Diagnostics

The device supports multiple protection features, discussed in detail in the subsequent sections. The SPI provides diagnosis information about the device and the load status. Each channel diagnosis information is independent from other channels. An error condition on one channel has no influence on the diagnostic of other channels in the device (unless configured to work in parallel, see Section 7.3.3.5 for more details).

When either an Overcurrent or an Over Temperature occurs on one channel, the diagnosis bit ERRx is set accordingly. As described in Section 7.3.4.2 and Section 7.3.4.3, the channel latches OFF and must be reactivated setting corresponding CLRx bit to 1b.

7.3.4.1 Undervoltage on V_M

Between V_{M_UVLO} and V_{M_OP} the undervoltage mechanism is triggered. If the device is operating and the supply voltage drops below the undervoltage threshold V_{M_UVLO}, the logic sets the bit UVRVM to 1b. As soon as the supply voltage V_M is above the minimum voltage operating threshold V_{M_OP}, the bit UVRVM is set to 0b after the first Standard Diagnosis readout. Undervoltage condition on VM influences the status of the channels, as described in Section 7.3.2. Figure 7-11 shows the undervoltage behavior.

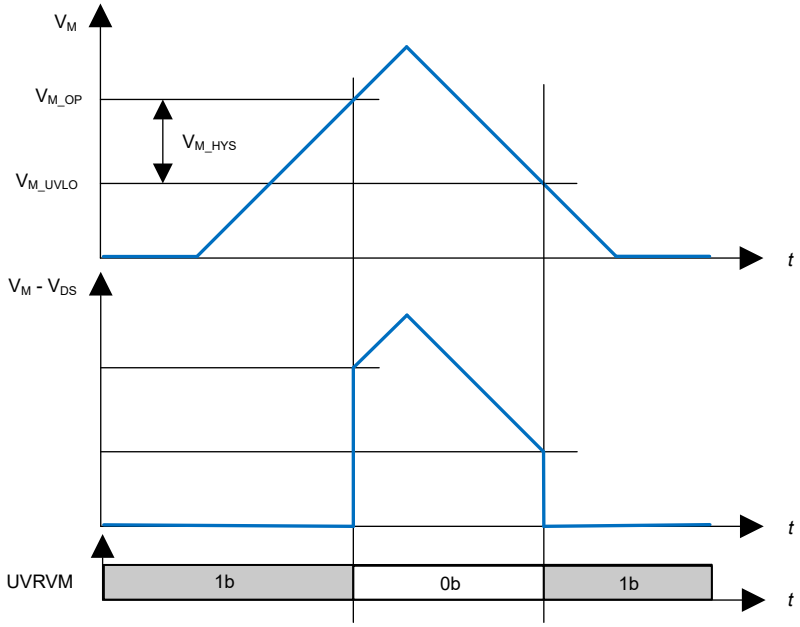

Figure 7-11. V_M Undervoltage Behavior

7.3.4.2 Overcurrent Protection

The device is protected in case of overcurrent or short circuit of the load. There are two overcurrent thresholds (see Figure 7-12):

- I_{L_OCP0} between channel switch ON and t_{OCPIN}
- I_{L_OCP1} after t_{OCPIN}

The values of I_{L_OCP0} and I_{L_OCP1} depend on the OCP bit. Every time the channel is switched OFF for a time longer than 2 * t_{SYNC} the over load current threshold is set back to I_{L_OCP0}.

Copyright © 2025 Texas Instruments Incorporated

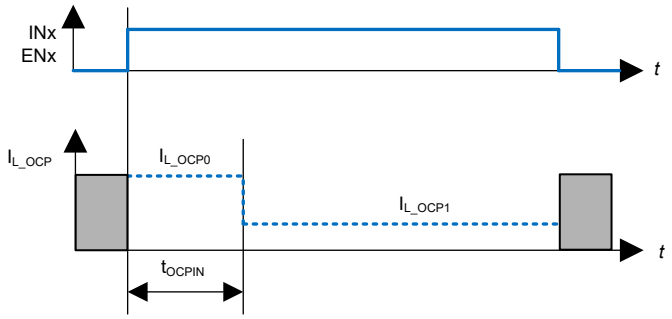

Figure 7-12. Overcurrent Threshold

In case the load current is higher than I_{L_OCP0} or I_{L_OCP1}, after time t_{OFF_OCP} the over loaded channel is switched OFF and the diagnosis bit ERRx is set. The channel can be switched ON after clearing the protection latch by setting the corresponding CLRx bit to 1b. This bit is set back to 0b internally after de-latching the channel. Please refer to Figure 7-13 for details.

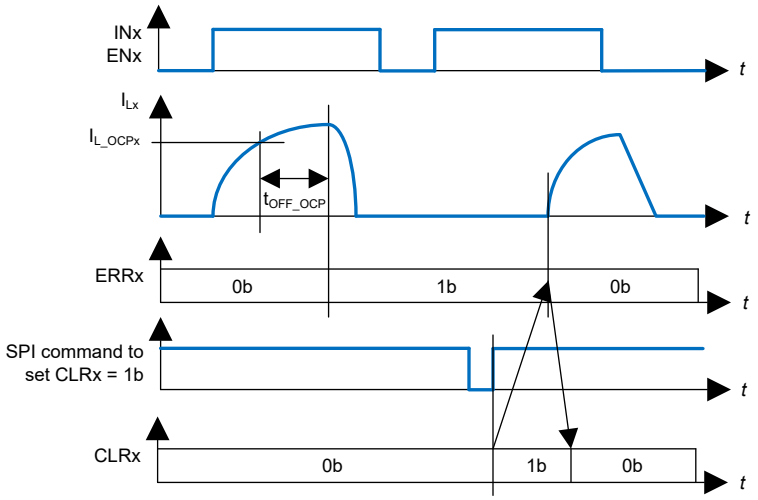

Figure 7-13. Latch OFF at Overcurrent

7.3.4.3 Over Temperature Protection

A temperature sensor is integrated for each channel, causing an overheated channel to switch OFF to prevent damage to the device. The corresponding diagnosis bit ERRx is set (combined with Over Load protection). The channel can be switched ON after clearing the protection latch by setting the corresponding CLRx bit to 1b. This bit is set back to 0b internally after de-latching the channel.

7.3.4.4 Over Temperature Warning

If the die temperature exceeds the trip point of the overtemperature warning (T_{OTW}), the OTW bit is set in the configuration register 2. The device performs no additional action and continues to function.

When the die temperature falls below the hysteresis point (T_{HYS_OTW}) of the overtemperature warning, the OTW bit clears automatically.

7.3.4.5 Over Temperature and Overcurrent Protection in Limp Home Mode

When the device is in Limp Home mode, channels 2 and 3 can be switched ON using the input pins. In case of Overcurrent, Short Circuit or Over Temperature the channels switch OFF. If the input pins remain logic high, the channels restart with the following timings:

- 10ms (first 8 retries)
- 20ms (following 8 retries)

Copyright © 2025 Texas Instruments Incorporated

- 40ms (following 8 retries)
- 80ms (as long as the input pin remains logic high and the error is still present)

If at any time the input pin is set to logic low for longer than 2*t_{SYNC}, the restart timer is reset. At the next channel activation while in Limp Home mode the timer starts from 10ms again. See Figure 7-14 for details. Overcurrent thresholds behave as described in Section 7.3.4.2.

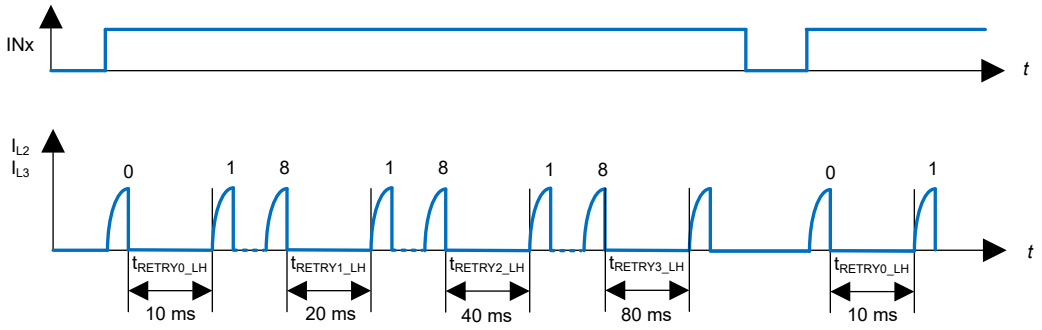

Figure 7-14. Restart Timer in Limp Home

7.3.4.6 Reverse Polarity Protection

In Reverse Polarity (also known as Reverse Battery) condition, high-side switches , are turned on to reduce power loss. Each ESD diode of the logic and supply pins contributes to total power dissipation. The reverse current through the channels has to be limited by the connected loads. The current through digital power supply (VDD) and input pins has to be limited as well (please refer to Section 6.1).

Note

No protection mechanism like temperature protection or current limitation is active during reverse polarity.

7.3.4.7 Over Voltage Protection

In the case of supply voltages between V_{M_SC} and V_{M_LD} the output MOSFETs are still operational and follow the input pins or the EN bits.

In addition to the output clamp for inductive loads as described in Section 7.3.3.2, there is a clamp mechanism available for over voltage protection for the logic and all channels, monitoring the voltage between VM and GND pins (V_{M_AZ}).

7.3.4.8 Output Status Monitor

The device compares each channel V_{OUT} with V_{OSM} and sets the corresponding OSMx bits accordingly. The bits are updated every time OSM register is read.

- $V_{OUT} > V_{OSM} \rightarrow$ OSMx = 1b (high-side channels)

A diagnosis current I_{OL} in parallel to the power switch can be enabled by programming the IOLx bit, which can be used for Open Load at OFF detection. Each channel has dedicated diagnosis current source. If the diagnosis current I_{OL} is enabled or if the channel changes state (ON → OFF or OFF → ON) waiting a time t_{OSM} for a reliable diagnosis is necessary. Enabling I_{OL} current sources increases the current consumption of the device. Even if an Open Load is detected, the channel is not latched OFF.

See Figure 7-15 for a timing overview (the values of IOLx refer to a channel in normal operation properly connected to the load).

Copyright © 2025 Texas Instruments Incorporated

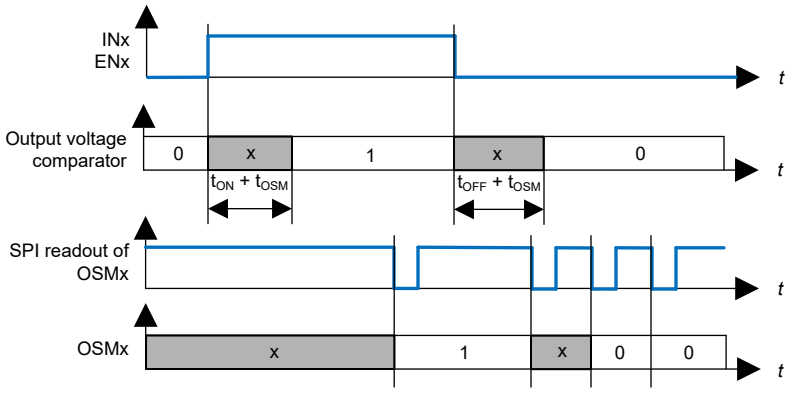

Figure 7-15. Output Status Monitor timing

Output Status Monitor diagnostic is available when $V_M = V_{M_NOR}$ and $V_{DD} \geq V_{DD_UVLO}$.

Due to the fact that Output Status Monitor checks the voltage level at the outputs in real time, for Open Load in OFF diagnostic synchronizing the reading of OSM register with the OFF state of the channels is necessary.

The following figure shows how Output Status Monitor is implemented at concept level.

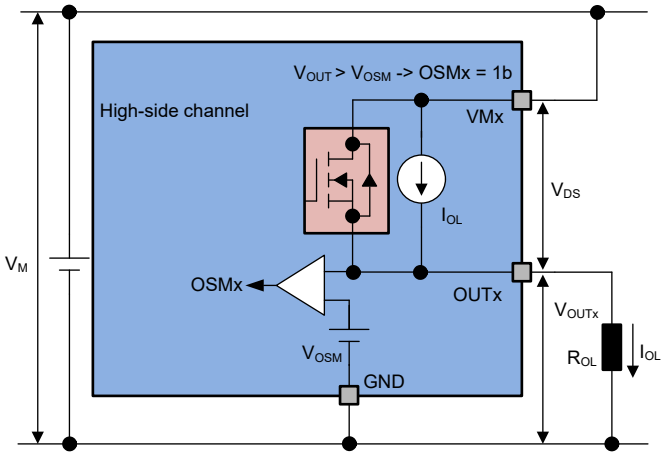

Figure 7-16. Output Status Monitor - High-side Channels

In Standard Diagnosis the bit OLOFF represents the OR combination of all OSMx bits for all channels in OFF state which have the corresponding current source I_{OL} activated.

When the DISOL bit is 1b, open load detection is disabled by disabling all the I_{OL} current sources.

7.3.4.9 Open Load Detection in ON State

Each high-side switch and auto-configurable channels used as high-side switch can detect Open Load at ON state, which can be controlled by programming the EN_OLON bits. Open Load at ON feature is not active by default after a reset. The device compares I_{L_Sx} with I_{L_OL} and sets the OLONx bits accordingly:

$I_{L_Sx} < I_{L_OL} \rightarrow$ OLONx = 1b if $V_{OUTx_S} > V_{OUT_S_OL}$

7.3.4.9.1 Open Load at ON - direct channel diagnosis

When EN_OLON bits are programmed for a specific channel, the internal multiplexer checks for Open Load at ON condition for the selected channel. TI recommends that the channel is ON for at least t_{ON} before activating the diagnosis. After a time $t_{OLONSET}$ the corresponding OLONx bit for the selected channel is available. All the other bits in the OLONx register are set to default (0b). The bits are updated every time the register is read.

Copyright © 2025 Texas Instruments Incorporated

When a channel is selected, the corresponding OLONx bit content is also shown in the Standard Diagnosis (bit OLON). In case of several register readouts in sequence, the register content is updated at every read request from microcontroller.

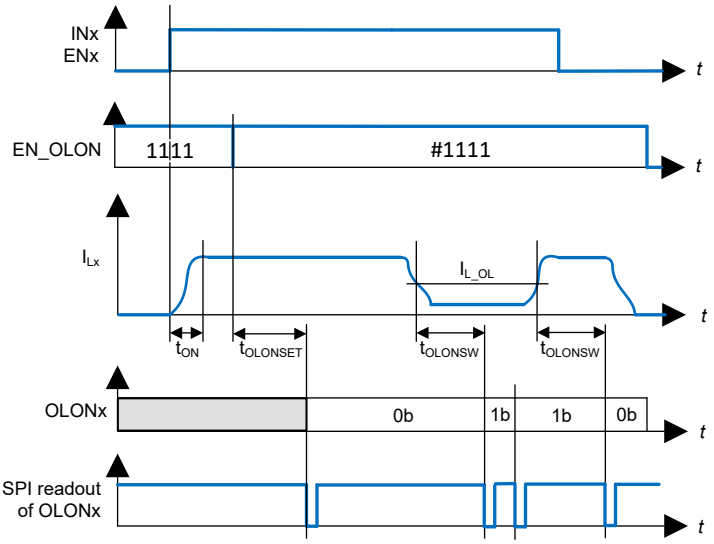

Figure 7-17. Open Load at ON Timings (direct Channels Diagnosis)

7.3.4.9.2 Open Load at ON - diagnosis loop

When EN_OLON bits are programmed with the value 1010b, the device starts a diagnosis loop where all auto-configurable (when used as high-side switches) channels are checked for Open Load at ON. First the internal logic checks all channels which are directly driven by the micro-controller and not configured to be driven by the internal PWM generator. Then the internal logic checks all channels which are configured to be driven by the internal PWM generator.

- Diagnosis sequence for channels driven directly by the micro-controller
  - First channel checked: channel 2. TI recommends that the channels are ON at least t_{ON} before enabling the diagnosis loop.
  - After a time $t_{OLONSET}$ + t_{SYNC} the diagnosis for the first channel is completed (OLONx bit is updated)
  - The internal multiplexer is set to the next channel. After a time t_{OLONSW} + t_{SYNC} the diagnosis is completed (OLONx bit is updated) for the selected channel. This step is repeated for all remaining directly driven channels.
  - If one channel is OFF when the diagnosis is performed, the corresponding OLONx is set to 0b
- Diagnosis sequence for channels driven by the internal PWM Generators
  - These channels are checked only after all channels directly driven by micro-controller are checked
  - Channels mapped to PWM Generator 0 are checked first
  - After a time $t_{OLONSET}$ the channel activation (switch ON) is the trigger event to perform Open Load at ON diagnosis for the first channel
  - After a time t_{ONMAX} + t_{OLONSW} the diagnosis for the first channel is completed (OLONx bit is updated)
  - The internal multiplexer is set to the next channel. After a time t_{OLONSW} the diagnosis is completed (OLONx bit is updated) for the currently selected channel. This step is repeated for all remaining PWM generator driven channels.
  - If the channel is in OFF state during the PWM period, the internal logic waits for the ON state to perform the diagnosis. After a time t_{ONMAX} + t_{OLONSW} the diagnosis for that channel is completed.
  - The minimum ON time for a reliable diagnosis is > t_{ONMAX} + t_{OLONSW}. If the ON time is < t_{ONMAX} + t_{OLONSW} the corresponding OLONx is set to 0b.

When the loop finishes, EN_OLON bits are set back to 1111b (default value) and OLONx bits save the last diagnosis loop result. Starting another diagnosis loop to update the register content is necessary.

Copyright © 2025 Texas Instruments Incorporated

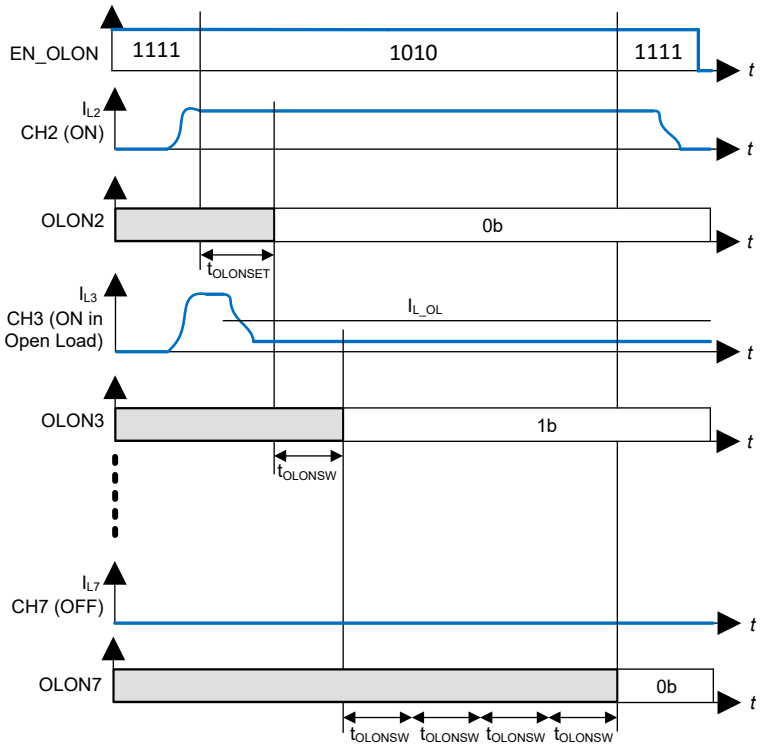

Figure 7-18. Open Load at ON Timings (Diagnosis Loop - Channels Driven by Micro-controller)

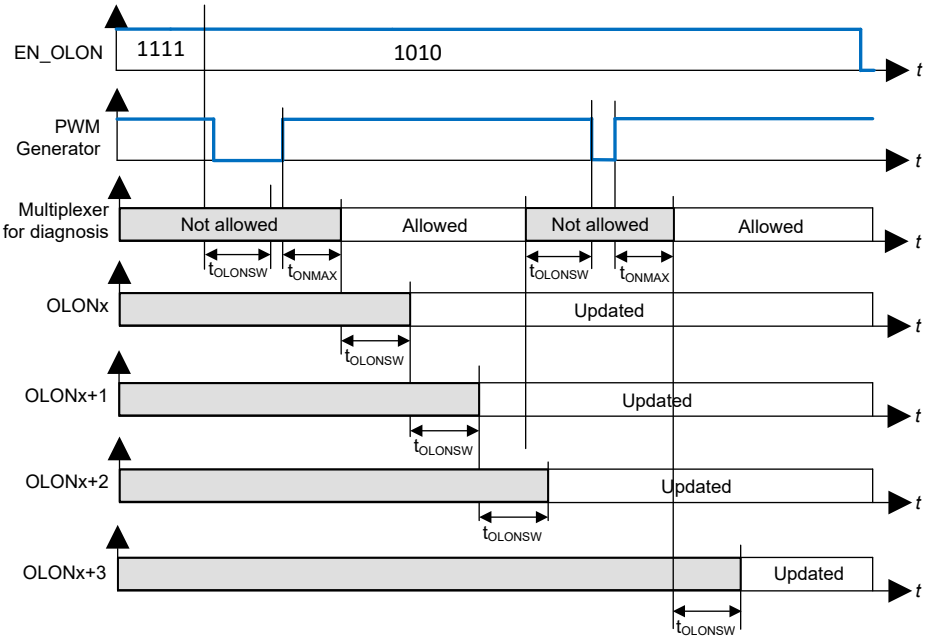

Figure 7-19. Open Load at ON Timings (Diagnosis Loop - Channels driven by Internal PWM Generators)

Copyright © 2025 Texas Instruments Incorporated

7.3.4.9.3 OLON bit

The OLON bit can assume the following values:

- 0b = no Open Load at ON state detected, or the channel is OFF when the diagnosis is performed
- 1b = Open Load at ON state detected

According to the setting of EN_OLON, different information are reported in the Standard Diagnosis.

- EN_OLON set to 0010b to 0111b : The OLON bit shows the Open Load at ON state diagnosis performed on the selected channel. The information is updated at every Standard Diagnosis readout.
- EN_OLON set to 1010b : the OLON bit shows the OR combination of all bits in OLONx register. The information is updated while the diagnosis loop is running.
- EN_OLON set to 1111b : the OLON bit shows the result of the latest diagnosis loop performed. Starting another diagnosis loop to update the information is necessary.
- EN_OLON set to any other value: The OLON bit is set to 0b. These values of EN_OLON bits are reserved and is not to be used in the application.

7.3.5 SPI Communication

The SPI is a full duplex synchronous serial follower interface, which uses four lines: SDO, SDI, SCLK and nSCS. Data is transferred by the lines SDI and SDO at the rate given by SCLK. The falling edge of nSCS indicates the beginning of an access. Data is sampled in on line SDI at the falling edge of SCLK and shifted out on line SDO at the rising edge of SCLK. Each access must be terminated by a rising edge of nSCS.

A modulo 8/16 counter maintains that data is taken only when a multiple of 8 bit has been transferred after the first 16 bits. Otherwise the TER bit is asserted. In this way the interface provides daisy chain capability with 16 bit as well as with 8 bit SPI devices.

7.3.5.1 SPI Signal Description

7.3.5.1.1 Chip Select (nSCS)

The microcontroller selects the device by means of the nSCS pin. Whenever the pin is in logic low state, data transfer can take place. When nSCS is in logic high state, any signals at the SCLK and SDI pins are ignored and SDO is forced into a high impedance state.

7.3.5.1.1.1 Logic high to logic low Transition

- The requested information is transferred into the shift register.
- SDO changes from high impedance state to logic high or logic low state depending on the logic OR combination between the transmission error flag (TER) and the signal level at pin SDI. This allows to detect a faulty transmission even in daisy chain configuration.
- If the device is in Sleep mode, SDO pin remains in high impedance state and no SPI transmission occurs.

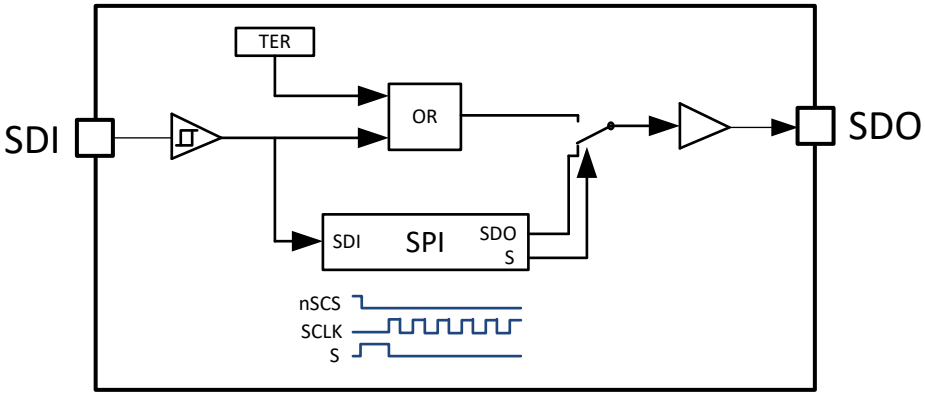

Figure 7-20. Combinational Logic for TER bit

7.3.5.1.1.2 Logic low to logic high Transition

- Command decoding is only done, when after the falling edge of nSCS exactly a multiple (1, 2, 3, ...) of eight SCLK signals have been detected after the first 16 SCLK pulses. In case of faulty transmission, the transmission error bit (TER) is set and the command is ignored.
- Data from shift register is transferred into the addressed register.

7.3.5.1.2 Serial Clock (SCLK)

This input pin clocks the internal shift register. The serial input (SDI) transfers data into the shift register on the falling edge of SCLK while the serial output (SDO) shifts diagnostic information out on the rising edge of the serial clock. It is essential that the SCLK pin is in logic low state whenever chip select nSCS makes any transition, otherwise the command may be not accepted.

7.3.5.1.3 Serial Input (SDI)

Serial input data bits are shift-in at this pin, the most significant bit first. SDI information is read on the falling edge of SCLK. The input data consists of two parts, control bits followed by data bits.

7.3.5.1.4 Serial Output (SDO)

Data is shifted out serially at this pin, the most significant bit first. SDO is in high impedance state until the nSCS pin goes to logic low state. New data appears at the SDO pin following the rising edge of SCLK.

7.3.5.2 Daisy Chain Capability

The SPI provides daisy chain capability. In this configuration several devices are activated by the same nSCS signal MCSN. The SDI line of one device is connected with the SDO line of another device, to build a chain. The end of the chain is connected to the output and input of the commander device, M-SDO and M-SDI respectively. The commander device provides the clock M-SCLK which is connected to the SCLK line of each device in the chain.

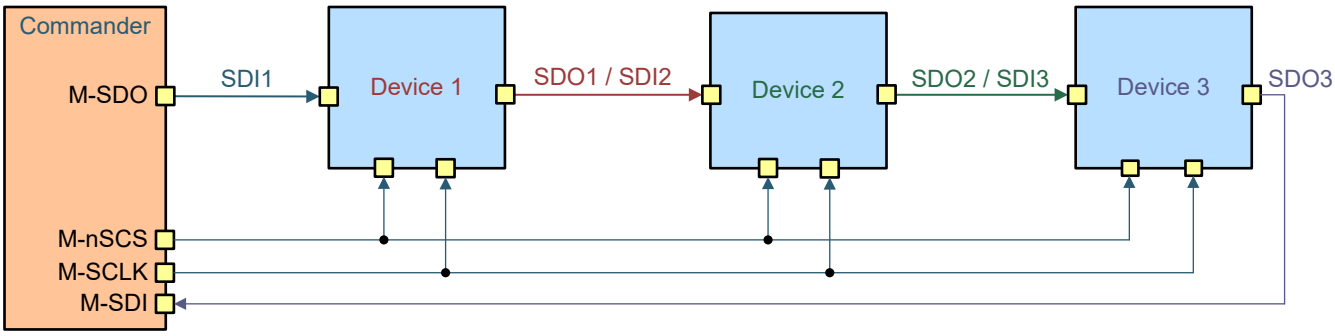

Figure 7-21. Daisy Chain Configuration

In the SPI block of each device, there is one shift register where each bit from SDI line is shifted in each SCLK. The bit shifted out occurs at the SDO pin. After sixteen SCLK cycles, the data transfer for one device is finished.

In single chip configuration, the nSCS line must turn logic high to make the device acknowledge the transferred data. In daisy chain configuration, the data shifted out at device 1 has been shifted in to device 2. When using three devices in daisy chain, several multiples of 8 bits have to be shifted through the devices (depending on how many devices with 8 bit SPI and how many with 16 bit SPI). After that, the MCSN line must turn logic high.

Copyright © 2025 Texas Instruments Incorporated

7.3.5.3 SPI Protocol

The relationship between SDI and SDO content during SPI communication is shown in Figure 7-22. SDI line represents the frame sent from the microcontroller and SDO line is the answer provided by the device.

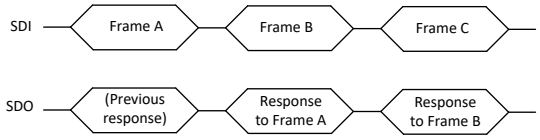

Figure 7-22. Relationship Between SDI and SDO During SPI Communication

The SPI protocol provides the answer to a command frame only with the next transmission triggered by the microcontroller. Although the biggest majority of commands and frames implemented in the device can be decoded without the knowledge of what happened before, considering what the microcontroller sent in the previous transmission to decode the response frame completely is advisable. The sequence of commands to read and write the content of a register looks as follows:

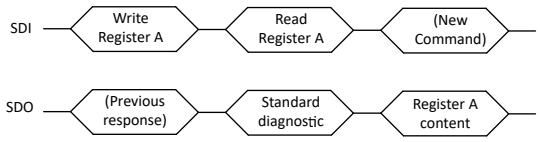

Figure 7-23. Register content sent back to microcontroller

There are 3 special situations where the frame sent back to the microcontroller is not related directly to the previous received frame:

- In case an error in transmission happened during the previous frame (for instance, the clock pulses were not multiple of 8 with a minimum of 16 bits), shown below.
- When the logic supply comes out of Power-On reset condition or after a Software Reset, as shown below.
- In case of command syntax errors
  - write command starting with 11b instead of 10b
  - read command starting with 00b instead of 01b
  - read or write commands on registers which are reserved or not used

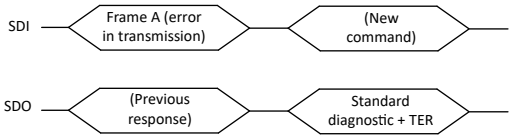

Figure 7-24. Response After a Error in Transmission

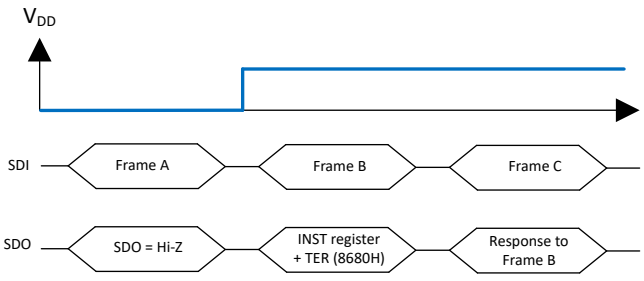

Figure 7-25. Response After Coming Out Of Power-On Reset at V_{DD}

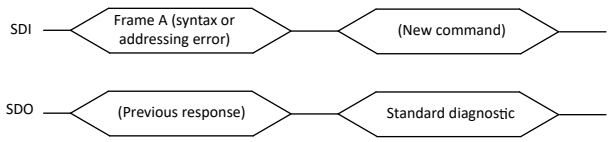

Figure 7-26. Response After a Command Syntax Error

A summary of all possible SPI commands is presented below, including the answer that the device sends back at the next transmission.

Table 7-9. SPI Command summary

Requested Operation	Frame sent to SDI pin	Frame received from SDO pin with the next command
Read Standard Diagnosis	0xxxxxxxxxxxx01b (xxxxxxxxxxxxb = don 't care)	0ddddddddddddddb (Standard Diagnosis)
Write 10 bit register	10ppppprrrrrrrrrb where: ppppb = register address ADDR0, rrrrrrrrrb = new register content	0ddddddddddddddb (Standard Diagnosis)
Read 10 bit registers	01ppppxxxxxxxx10b where: ppppb = register address ADDR0, xxxxxxxxb = don't care	10ppppprrrrrrrrrb where: ppppb = register address ADDR0c, rrrrrrrrrb = register content
Write 8 bit register	10ppppqqrrrrrrrrb where: ppppb = register address ADDR0, qqb = register address ADDR1, rrrrrrrrb = new register content	0ddddddddddddddb (Standard Diagnosis)
Read 8 bit registers	01ppppqqxxxxxx10b where: ppppb = register address ADDR0, qqb = register address ADDR1, xxxxxxb = don't care	10ppppqqrrrrrrrrb where: ppppb = register address ADDR0c, qqb = register address ADDR1, rrrrrrrrb = register content

“p” = address bits for ADDR0 field, “q” = address bit for ADDR1 field, “r” = register content, “d” = diagnostic bit

7.3.5.4 SPI Registers

All registers except PWM0 and PWM1 have the following structure -

15	14	13	12	11	10	9	8	7	6	5	4	3	2	1	0	Default
R = 0 W = 1	R = 1 W = 0	ADDR0				ADDR1		DATA								XXXXH

PWM0 and PWM1 registers have the following structure -

15	14	13	12	11	10	9	8	7	6	5	4	3	2	1	0	Default
R = 0 W = 1	R = 1 W = 0	ADDR0				DATA										XXXXH

All registers with addresses not mentioned in subsequent sections have to be considered as reserved. Read operations performed on those registers return the Standard Diagnosis. The column Default indicates the content of the register (8 bits) after a reset.

The LOCK bits in configuration register 2 can be used to lock register settings from unintended SPI writes.

- Write 110b to lock the settings by ignoring further register writes except to LOCK bits and CLRx bits. Writing any sequence other than 110b has no effect when unlocked.
- Write 011b to unlock all registers. Writing any sequence other than 011b has no effect when locked.

Copyright © 2025 Texas Instruments Incorporated

7.3.5.4.1 Standard Diagnosis Register

- **Table 7-10. Standard Diagnosis Register**

15	14	13	12	11	10	9	8	7	6	5	4	3	2	1	0	Default
0	UVRVM	0	MODE		TER	OL ON	OLOFF	ERR7	ERR6	ERR5	ERR4	ERR3	ERR2	ERR1	ERR0	5800h

Table 7-11. Standard Diagnosis Register Description

Field	Bits	Type	Description
UVRVM	14	R	VM Undervoltage monitor – 0b: No undervoltage condition on VM detected – 1b (default): There was at least one VM Undervoltage condition since last Standard Diagnosis readout
MODE	12-11	R	Mode of operation monitor – 00b: Reserved – 01b: Limp Home Mode – 10b: Active Mode – 11b (default): Idle Mode
TER	10	R	Transmission error – 0b: Previous transmission was successful (modulo 16 + n*8 clocks received, where n = 0, 1, 2...) – 1b (default): Previous transmission failed. The first frame after a reset is TER set to 1b and the INST register. The second frame is the Standard Diagnosis with TER set to 0b (if there was no fail in the previous transmission)
OLON	9	R	Open Load at ON State diagnosis – 0b (default): No Open Load at ON detected – 1b: Open Load at ON detected
OLOFF	8	R	Open load in OFF diagnosis – 0b (default): All channels in OFF state (which have IOLx bit set to 1b) have $V_{OUT_S} < V_{OSM}$ – 1b: At least one channel in OFF state (with IOLx bit set to 1b) has $V_{OUT_S} < V_{OSM}$ Channels in ON state are not considered.
ERRx	7-0	R	Overload / Over temperature Diagnosis of Channel x – 0b (default): No failure detected – 1b: Over temperature or overload

7.3.5.4.2 Output control register

Table 7-12. Output Control Register

15	14	13	12	11	10	9	8	7	6	5	4	3	2	1	0	Default
R = 0 W = 1	R = 1 W = 0	0000				00		EN7	EN6	EN5	EN4	EN3	EN2	EN1	EN0	00h

Table 7-13. Output Control Register Description

Field	Bits	Type	Description
ENx	7-0	RW	Output x control register • 0b (default): Output x is OFF • 1b: Output is ON

7.3.5.4.3 Bulb Inrush Mode Register

Table 7-14. Bulb Inrush Mode Register

15	14	13	12	11	10	9	8	7	6	5	4	3	2	1	0	Default
R = 0 W = 1	R = 1 W = 0	0000				01		BIM7	BIM6	BIM5	BIM4	BIM3	BIM2	BIM1	BIM0	00h

Table 7-15. Bulb Inrush Mode Register Description

Field	Bits	Type	Description
BIMx	7-0	RW	Bulb Inrush Mode register • 0b (default): Output latches OFF in case of errors • 1b: Output restarts automatically in case of errors

7.3.5.4.4 Input 0 Mapping Register

Table 7-16. Input 0 Mapping Register

15	14	13	12	11	10	9	8	7	6	5	4	3	2	1	0	Default
R = 0 W = 1	R = 1 W = 0	0001				00		MAP07	MAP06	MAP05	MAP04	MAP03	MAP02	MAP01	MAP00	04h

Table 7-17. Input 0 Mapping Register Description

Field	Bits	Type	Description
MAP0x	7-0	RW	Input pin 0 Mapping register • 0b (default): Output x is not connected to the input pin 0 • 1b: The output is connected to the input pin Note: Channel 2 has the corresponding bit set to 1b by default

Copyright © 2025 Texas Instruments Incorporated

7.3.5.4.5 Input 1 Mapping Register

Table 7-18. Input 1 Mapping Register

15	14	13	12	11	10	9	8	7	6	5	4	3	2	1	0	Default
R = 0 W = 1	R = 1 W = 0	0001				01		MAP17	MAP16	MAP15	MAP14	MAP13	MAP12	MAP11	MAP10	08h

Table 7-19. Input 1 Mapping Register Description

Field	Bits	Type	Description
MAP1x	7-0	RW	Input pin 1 Mapping register • 0b (default): Output x is not connected to the input pin 1 • 1b: The output is connected to the input pin Note: Channel 3 has the corresponding bit set to 1b by default

7.3.5.4.6 Input Status Monitor Register

This is the first register transmitted after a reset of the logic

.

Table 7-20. Input Status Monitor Register

15	14	13	12	11	10	9	8	7	6	5	4	3	2	1	0	Default
0	1	0001				10		TER	RSVD					INST1	INST0	00h

Table 7-21. Input Status Monitor Register Description

Field	Bits	Type	Description
TER	7	R	• 0b: Previous transmission was successful (modulo 16 + n*8 clocks received, where n = 0, 1, 2...) • 1b (default): Previous transmission failed
RSVD	6-2	R	Reserved
INST1	1	R	• 0b (default): IN1 pin is set to logic low • 1b: IN1 pin is set to logic high
INST0	0	R	• 0b (default): IN0 pin is set to logic low • 1b: IN0 pin is set to logic high

Copyright © 2025 Texas Instruments Incorporated

7.3.5.4.7 Open Load Current Control Register

Table 7-22. Open Load Current Control Register

15	14	13	12	11	10	9	8	7	6	5	4	3	2	1	0	Default
R = 0 W = 1	R = 1 W = 0	0010				00		IOL7	IOL6	IOL5	IOL4	IOL3	IOL2	IOL1	IOL0	00h

Table 7-23. Open Load Current Control Register Description

Field	Bits	Type	Description
IOLx	7-0	RW	• 0b (default): IOL current source for channel x not enabled • 1b: IOL current source for channel x enabled

7.3.5.4.8 Output Status Monitor Register

Table 7-24. Output Status Monitor Register

15	14	13	12	11	10	9	8	7	6	5	4	3	2	1	0	Default
0	1	0010				01		OSM7	OSM6	OSM5	OSM4	OSM3	OSM2	OSM1	OSM0	00h

Table 7-25. Output Status Monitor Register Description

Field	Bits	Type	Description
OSMx	7-0	R	• 0b (default): For channel x, $V_{OUT_S} < V_{OSM}$ • 1b: For channel x, $V_{OUT_S} > V_{OSM}$

7.3.5.4.9 Open Load at ON Register

This feature is not active for channels configured as Low-Side switches.

Table 7-26. Open Load at ON Register

15	14	13	12	11	10	9	8	7	6	5	4	3	2	1	0	Default
R = 0 W = 1	R = 1 W = 0	0010				10		OLON7	OLON6	OLON5	OLON4	OLON3	OLON2	OLON1	OLON1	00h

Table 7-27. Open Load at ON Register Description

Field	Bits	Type	Description
OLONx	7-0	R	• 0b (default): normal operation or diagnosis performed on channel OFF • 1b: Open Load at ON detected

Copyright © 2025 Texas Instruments Incorporated

7.3.5.4.10 EN_OLON Register

Table 7-28. EN_OLON Register

15	14	13	12	11	10	9	8	7	6	5	4	3	2	1	0	Default
R = 0 W = 1	R = 1 W = 0	0010				11		RSVD				EN_OLON				0Fh

Table 7-29. EN_OLON Register Description

Field	Bits	Type	Description
RSVD	7-4	RW	Reserved
EN_OLON	3-0	RW	• 0000b: reserved • 0001b: reserved • 0010b: Open Load at ON diagnostic active on channel 2 • 0011b: Open Load at ON diagnostic active on channel 3 • 0100b: Open Load at ON diagnostic active on channel 4 • 0101b: Open Load at ON diagnostic active on channel 5 • 0110b: Open Load at ON diagnostic active on channel 6 • 0111b: Open Load at ON diagnostic active on channel 7 • 1000b: reserved • 1001b: reserved • 1010b: Open Load at ON diagnosis loop start • 1011b: reserved • 1100b: reserved • 1101b: reserved • 1110b: reserved • 1111b (default): Open Load at ON diagnostic not active

7.3.5.4.11 Configuration Register

Table 7-30. Configuration Register

15	14	13	12	11	10	9	8	7	6	5	4	3	2	1	0	Default
R = 0 W = 1	R = 1 W = 0	0011				00		ACT	RST	DISOL	OCP	PAR3	PAR2	PAR1	PAR0	00h

Table 7-31. Configuration Register Description

Field	Bits	Type	Description
ACT	7	RW	• 0b (default): Normal operation or device leaves Active Mode • 1b: Device enters Active Mode
RST	6	RW	• 0b (default): Normal operation • 1b: Execute Reset command (self clearing)
DISOL	5	RW	• 0b (default): Open load at OFF detection is enabled • 1b: Open load at OFF detection is disabled
OCP	4	RW	• 0b (default): Overcurrent protection current profile 1 • 1b: Overcurrent protection current profile 2
PAR3	3	RW	• 0b (default): Normal operation • 1b: Channel 5 and 7 have Over Load and Over Temperature synchronized

Copyright © 2025 Texas Instruments Incorporated

Table 7-31. Configuration Register Description (continued)

PAR2	2	RW	• 0b (default): Normal operation • 1b: Channel 4 and 6 have Over Load and Over Temperature synchronized
PAR1	1	RW	• 0b (default): Normal operation • 1b: Channel 1 and 3 have Over Load and Over Temperature synchronized
PAR0	0	RW	• 0b (default): Normal operation • 1b: Channel 0 and 2 have Over Load and Over Temperature synchronized

7.3.5.4.12 Output Clear Latch Register

Table 7-32. Output Clear Latch Register

15	14	13	12	11	10	9	8	7	6	5	4	3	2	1	0	Default
R = 0 W = 1	R = 1 W = 0	0011				01		CLR7	CLR6	CLR5	CLR4	CLR3	CLR2	CLR1	CLR0	00h

Table 7-33. Output Clear Latch Register Description

Field	Bits	Type	Description
CLRx	7-0	RW	• 0b (default): Normal operation • 1b: Clear the error latch for the selected output

7.3.5.4.13 FPWM Register

Table 7-34. FPWM Register

15	14	13	12	11	10	9	8	7	6	5	4	3	2	1	0	Default
R = 0 W = 1	R = 1 W = 0	0011				10		FPWM				FCTR1	FCTR0	EN_PWM1	EN_PWM0	80h

Table 7-35. FPWM Register Description

Field	Bits	Type	Description
FPWM	7-4	RW	• 0000b: Reserved • 0001b: base frequency f_{INT} - 37.2% • 0010b: base frequency f_{INT} - 31.9% • 0011b: base frequency f_{INT} - 26.9% • 0100b: base frequency f_{INT} - 21.0% • 0101b: base frequency f_{INT} - 15.5% • 0110b: base frequency f_{INT} - 10.9% • 0111b: base frequency f_{INT} - 5.8% • 1000b (default): base frequency f_{INT} • 1001b: base frequency f_{INT} + 4.3% • 1010b: base frequency f_{INT} + 8.9% • 1011b: base frequency f_{INT} + 14.0% • 1100b: base frequency f_{INT} + 19.5% • 1101b: base frequency f_{INT} + 25.6% • 1110b: base frequency f_{INT} + 32.4% • 1111b: base frequency f_{INT} + 40%
FCTR1	3	RW	• 0b: PWM frequency of PWM generator 1 is 100 or 200 or 400Hz determined by FREQ1 bits • 1b: PWM frequency of PWM generator 1 is 800 or 1600 or 2000Hz determined by FREQ1 bits

Copyright © 2025 Texas Instruments Incorporated

Table 7-35. FPWM Register Description (continued)

FCTR0	2	RW	• 0b: PWM frequency of PWM generator 0 is 100 or 200 or 400Hz determined by FREQ0 bits • 1b: PWM frequency of PWM generator 0 is 800 or 1600 or 2000Hz determined by FREQ0 bits
EN_PWM1	1	RW	• 0b (default): PWM Generator 1 not active • 1b: PWM Generator 1 is active
EN_PWM0	0	RW	• 0b (default): PWM Generator 0 not active • 1b: PWM Generator 0 is active

7.3.5.4.14 PWM0 Configuration Register

Table 7-36. PWM0 Configuration Register

15	14	13	12	11	10	9	8	7	6	5	4	3	2	1	0	Default
R = 0 W = 1	R = 1 W = 0	0100				FREQ0		DC0								000h

Table 7-37. PWM0 Configuration Register Description

Field	Bits	Type	Description
FREQ0	9-8	RW	• 00b (default): Internal clock divided by 1024 or 128 depending on FCTR0 • 01b: Internal clock divided by 512 or 64 depending on FCTR0 • 10b: Internal clock divided by 256 or 51.2 depending on FCTR0 • 11b: 100% duty cycle
DC0	7-0	RW	• 00000000b: PWM generator is OFF • 11111111b: PWM generator is ON (99.61% duty cycle)

7.3.5.4.15 PWM1 Configuration Register

Table 7-38. PWM1 Configuration Register

15	14	13	12	11	10	9	8	7	6	5	4	3	2	1	0	Default
R = 0 W = 1	R = 1 W = 0	0101				FREQ1		DC1								000h

Table 7-39. PWM1 Configuration Register Description

Field	Bits	Type	Description
FREQ1	9-8	RW	• 00b (default): Internal clock divided by 1024 or 128 depending on FCTR1 • 01b: Internal clock divided by 512 or 64 depending on FCTR1 • 10b: Internal clock divided by 256 or 51.2 depending on FCTR1 • 11b: 100% duty cycle
DC1	7-0	RW	• 00000000b: PWM generator is OFF • 11111111b: PWM generator is ON (99.61% duty cycle)

7.3.5.4.16 PWM_OUT Register

Table 7-40. PWM_OUT Register

15	14	13	12	11	10	9	8	7	6	5	4	3	2	1	0	Default

Copyright © 2025 Texas Instruments Incorporated

Table 7-40. PWM_OUT Register (continued)

R = 0 W = 1	R = 1 W = 0	1001	00	PWM_ OUT7	PWM_ OUT6	PWM_ OUT5	PWM_ OUT4	PWM_ OUT3	PWM_ OUT2	PWM_O UT1	PWM_ OUT0	00h

Table 7-41. PWM_OUT Register Description

Field	Bits	Type	Description
PWM_OUTx	7-0	RW	• 0b (default): Output x is not driven by one of the two PWM Generators • 1b: Output x is connected to a PWM generator

7.3.5.4.17 MAP_PWM Register

Setting the PWM_OUT register to activate the PWM Generator control for the outputs is necessary.

Table 7-42. MAP_PWM Register

15	14	13	12	11	10	9	8	7	6	5	4	3	2	1	0	Default
R = 0 W = 1	R = 1 W = 0	1001				01		MAP_P WM7	MAP_ PWM6	MAP_P WM5	MAP_ PWM4	MAP_P WM3	MAP_P WM2	MAP_P WM1	MAP_P WM0	00h

Table 7-43. MAP_PWM Register Description

Field	Bits	Type	Description
MAP_PWMx	7-0	RW	• 0b (default): Output x is connected to PWM generator 0 • 1b: Output x is connected to PWM generator 1

7.3.5.4.18 Configuration 2 Register

Table 7-44. Configuration 2 Register

15	14	13	12	11	10	9	8	7	6	5	4	3	2	1	0	Default
R = 0 W = 1	R = 1 W = 0	1010				00		LOCK[2:0]			RSVD		OTW	OLMAX	SR	60h

Table 7-45. Configuration Register Description

Field	Bits	Type	Description
LOCK[2:0]	7-5	RW	Write 110b to lock the settings by ignoring further register writes except to LOCK bits and CLRx bits. Writing any sequence other than 110b has no effect when unlocked. Write 011b to this register to unlock all registers. Writing any sequence other than 011b has no effect when locked.
RSVD	4-3	R	Reserved
OTW	2	R	Overtemperature Warning • 0b (default): No Overtemperature event • 1b: Overtemperature event
OLMAX	1	RW	Sets Open Load at ON Diagnosis waiting time before mux activation • 0b (default): t_{ONMAX} = 60µs • 1b: t_{ONMAX} = 80µs
SR	0	RW	Sets output slew rate • 0b (default): 1.3V/µs slew rate • 1b: 2.5V/µs slew rate

Copyright © 2025 Texas Instruments Incorporated

8 Application and Implementation

Note

Information in the following applications sections is not part of the TI component specification, and TI does not warrant its accuracy or completeness. TI's customers are responsible for determining suitability of components for their purposes, as well as validating and testing their design implementation to confirm system functionality.

8.1 Application Information

The device is primarily used to drive relays, lamps, LEDs and control motors in Automotive and Industrial applications.

Copyright © 2025 Texas Instruments Incorporated

8.1.1 Suggested External Components

Table 8-1 lists the recommended external components for the device.

Table 8-1. Suggested External Components

Description	Value	Purpose
Resistors in series with IN0, IN1 and nSLEEP pins	4.7kΩ	Protection of the microcontroller during over voltage and reverse polarity. Also to maintain output channels OFF during loss of ground.
Resistors in series with nSCS, SCLK, SDI and SDO pins	470Ω	Protection of the microcontroller during over voltage and reverse polarity
Resistor in series with VDD pin	100Ω	Logic supply voltage filtering
Bypass capacitor on VDD pin	100nF	Logic supply voltage filtering
Bypass capacitor on VM pin	68nF	Battery voltage filtering
TVS diode on VM pin	TVS3300	Protection of device during overvoltage
Capacitor on each OUT pin (optional)	10nF	Protection of the device against ESD and BCI

8.1.2 Application Plots

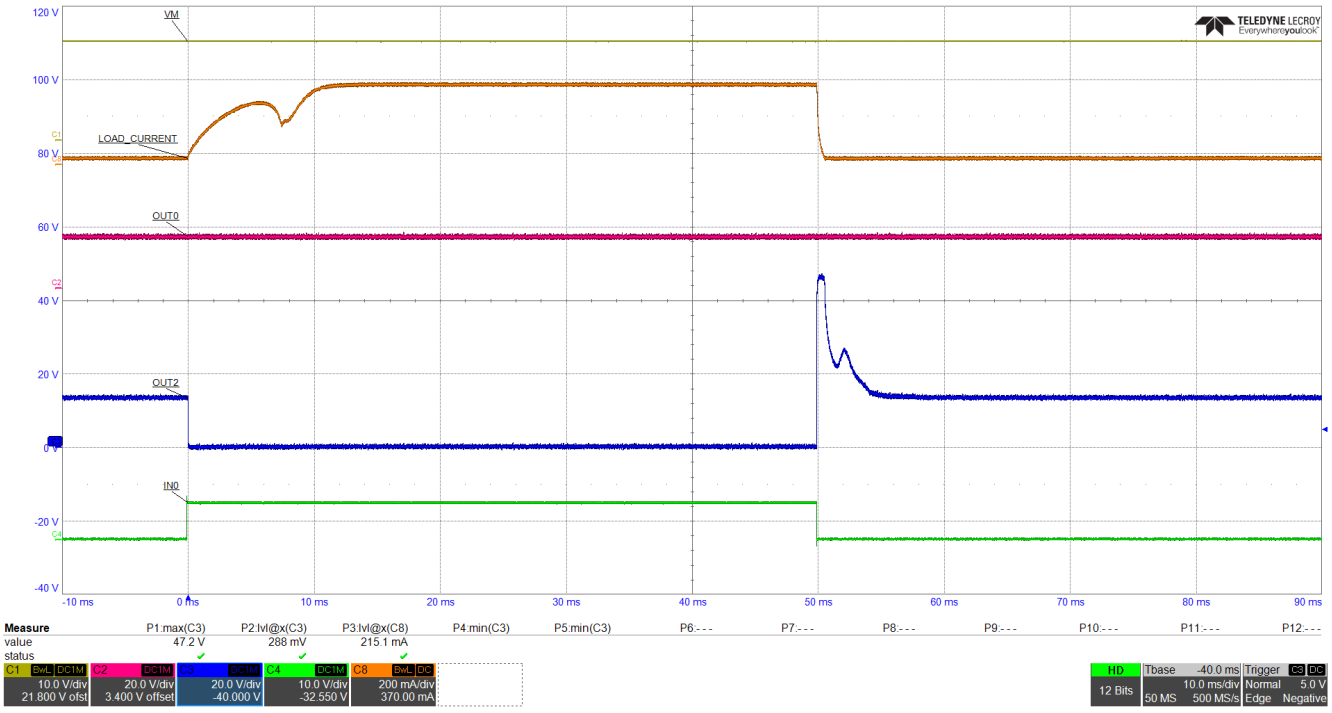

Figure 8-1. Output Turn-ON/OFF from IN0 pin

8.2 Typical Application

The following figure shows the application schematic.

Copyright © 2025 Texas Instruments Incorporated

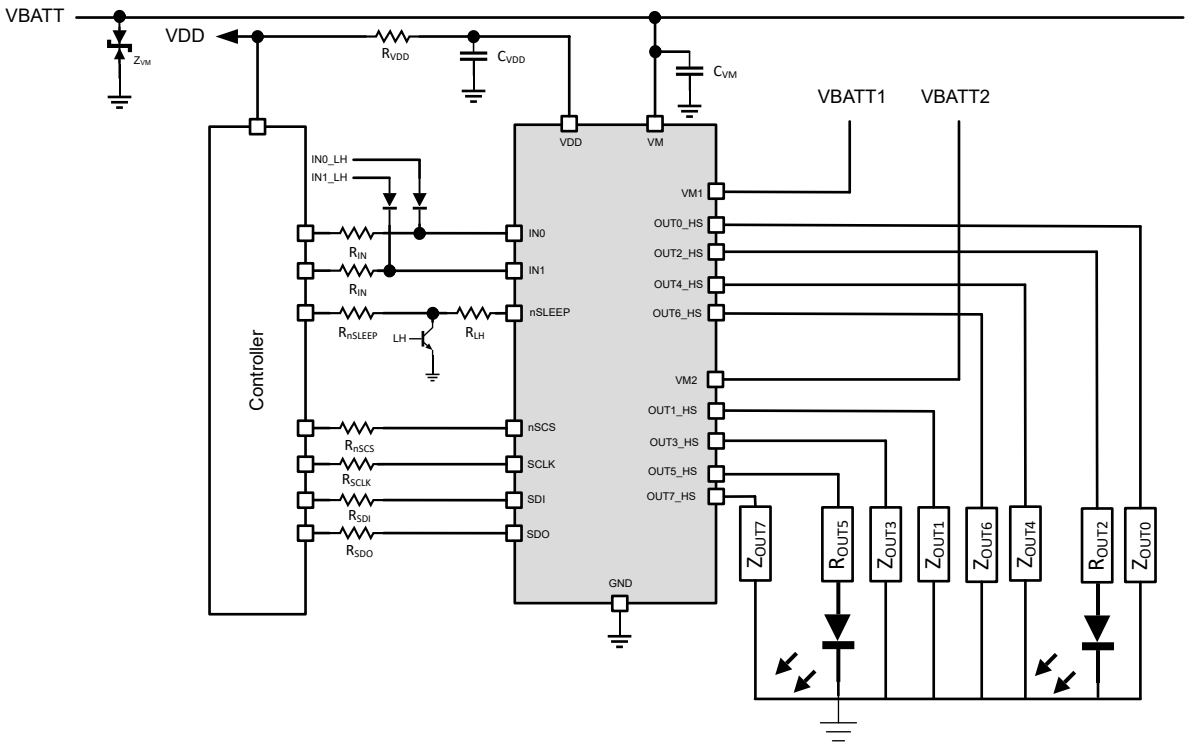

Figure 8-2. Application Schematic

8.3 Layout

8.3.1 Layout Guidelines

- The VM pin should be bypassed to GND using low-ESR ceramic bypass capacitor with a recommended value of 68nF rated for VM. The capacitor should be placed as close to the VM pin as possible with a thick trace or ground plane connection to the device GND pin.
- Bypass the VDD pin to ground with a low-ESR ceramic capacitor. A value of 100nF rated for 6.3V is recommended. Place this bypassing capacitor as close to the pin as possible.
- In general, inductance between the power supply pins and decoupling capacitors must be avoided.
- Connect series resistors between IN0, IN1, nSLEEP, nSCS, SCLK, SDI, SDO and VDD pins of the device and corresponding pins of the microcontroller. The recommended values of the resistors are shown in Section 7.3.
- The thermal PAD of the package must be connected to system ground.
  - TI recommends to use a big unbroken single ground plane for the whole system / board. The ground plane can be made at bottom PCB layer.
  - To minimize the impedance and inductance, the traces from ground pins are as short and wide as possible, before connecting to bottom layer ground plane through vias.
  - Multiple vias are suggested to reduce the impedance.
  - Try to clear the space around the device as much as possible especially at bottom PCB layer to improve the heat spreading.
  - Single or multiple internal ground planes connected to the thermal PAD also helps spreading the heat and reduce the thermal resistance.

8.3.2 Package Footprint Compatibility

The PWP0024T package of the device is footprint compatible with other SO-24 packages used in the industry, as shown in Figure 8-3 and Figure 8-4.

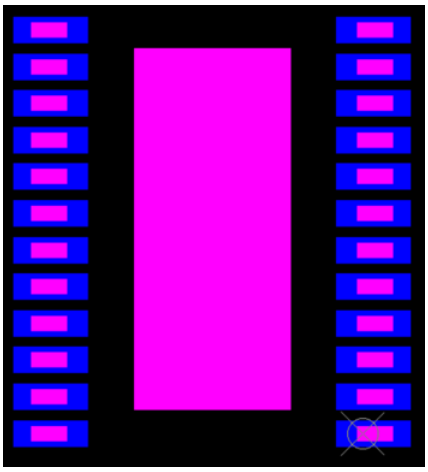

Figure 8-3. PWP0024T on another SO-24 PCB Pad, Pink: TI PWP0024T leads, Blue: other SO-24 PCB Pad

Copyright © 2025 Texas Instruments Incorporated

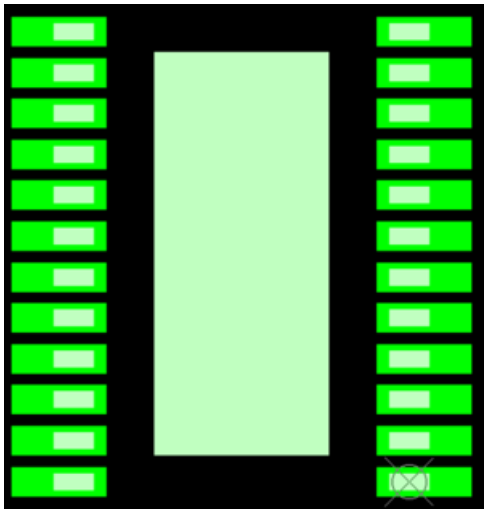

Figure 8-4. SO-24 on PWP0024T PCB Pad, White: other SO-24 leads, Green: TI PWP0024T PCB Pad

Copyright © 2025 Texas Instruments Incorporated

9 Device and Documentation Support

TI offers an extensive line of development tools. Tools and software to evaluate the performance of the device, generate code, and develop designs are listed below.

9.1 Receiving Notification of Documentation Updates

To receive notification of documentation updates, navigate to the device product folder on ti.com. Click on *Notifications* to register and receive a weekly digest of any product information that has changed. For change details, review the revision history included in any revised document.

9.2 Support Resources

TI E2E™ support forums are an engineer's go-to source for fast, verified answers and design help — straight from the experts. Search existing answers or ask your own question to get the quick design help you need.

Linked content is provided "AS IS" by the respective contributors. They do not constitute TI specifications and do not necessarily reflect TI's views; see TI's Terms of Use.

9.3 Trademarks

9.4 Electrostatic Discharge Caution



This integrated circuit can be damaged by ESD. Texas Instruments recommends that all integrated circuits be handled with appropriate precautions. Failure to observe proper handling and installation procedures can cause damage.

ESD damage can range from subtle performance degradation to complete device failure. Precision integrated circuits may be more susceptible to damage because very small parametric changes could cause the device not to meet its published specifications.

9.5 Glossary

TI Glossary	This glossary lists and explains terms, acronyms, and definitions.

10 Revision History

NOTE: Page numbers for previous revisions may differ from page numbers in the current version.

Changes from Revision * (September 2024) to Revision A (March 2025)	Page
• Updated device status to Production Data	1

11 Mechanical, Packaging, and Orderable Information

The following pages include mechanical, packaging, and orderable information. This information is the most current data available for the designated devices. This data is subject to change without notice and revision of this document. For browser-based versions of this data sheet, refer to the left-hand navigation.

Copyright © 2025 Texas Instruments Incorporated

PACKAGING INFORMATION

Orderable part number	Status (1)	Material type (2)	Package | Pins	Package qty | Carrier	RoHS (3)	Lead finish/ Ball material (4)	MSL rating/ Peak reflow (5)	Op temp (°C)	Part marking (6)
DRV81080QPWPRQ1	Active	Production	HTSSOP (PWP) | 24	3000 | LARGE T&R	Yes	NIPDAU	Level-2-260C-1 YEAR	-40 to 125	81080Q1
DRV81080QPWPRQ1.A	Active	Production	HTSSOP (PWP) | 24	3000 | LARGE T&R	Yes	NIPDAU	Level-2-260C-1 YEAR	See DRV81080QPWPRQ1	81080Q1

(1) **Status:** For more details on status, see our product life cycle.

(2) **Material type:** When designated, preproduction parts are prototypes/experimental devices, and are not yet approved or released for full production. Testing and final process, including without limitation quality assurance, reliability performance testing, and/or process qualification, may not yet be complete, and this item is subject to further changes or possible discontinuation. If available for ordering, purchases will be subject to an additional waiver at checkout, and are intended for early internal evaluation purposes only. These items are sold without warranties of any kind.

(3) **RoHS values:** Yes, No, RoHS Exempt. See the TI RoHS Statement for additional information and value definition.

(4) **Lead finish/Ball material:** Parts may have multiple material finish options. Finish options are separated by a vertical ruled line. Lead finish/Ball material values may wrap to two lines if the finish value exceeds the maximum column width.

(5) **MSL rating/Peak reflow:** The moisture sensitivity level ratings and peak solder (reflow) temperatures. In the event that a part has multiple moisture sensitivity ratings, only the lowest level per JEDEC standards is shown. Refer to the shipping label for the actual reflow temperature that will be used to mount the part to the printed circuit board.

(6) **Part marking:** There may be an additional marking, which relates to the logo, the lot trace code information, or the environmental category of the part.

Multiple part markings will be inside parentheses. Only one part marking contained in parentheses and separated by a "~" will appear on a part. If a line is indented then it is a continuation of the previous line and the two combined represent the entire part marking for that device.

Important Information and Disclaimer: The information provided on this page represents TI's knowledge and belief as of the date that it is provided. TI bases its knowledge and belief on information provided by third parties, and makes no representation or warranty as to the accuracy of such information. Efforts are underway to better integrate information from third parties. TI has taken and continues to take reasonable steps to provide representative and accurate information but may not have conducted destructive testing or chemical analysis on incoming materials and chemicals. TI and TI suppliers consider certain information to be proprietary, and thus CAS numbers and other limited information may not be available for release.

In no event shall TI's liability arising out of such information exceed the total purchase price of the TI part(s) at issue in this document sold by TI to Customer on an annual basis.

TAPE AND REEL INFORMATION

REEL DIMENSIONS

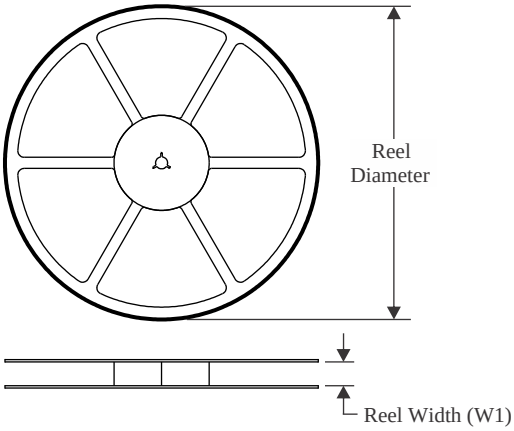

TAPE DIMENSIONS

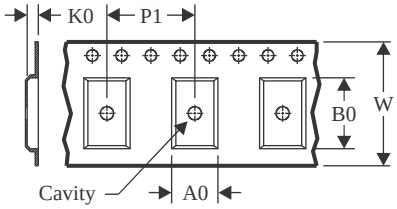

A0	Dimension designed to accommodate the component width
B0	Dimension designed to accommodate the component length
K0	Dimension designed to accommodate the component thickness
W	Overall width of the carrier tape
P1	Pitch between successive cavity centers

QUADRANT ASSIGNMENTS FOR PIN 1 ORIENTATION IN TAPE

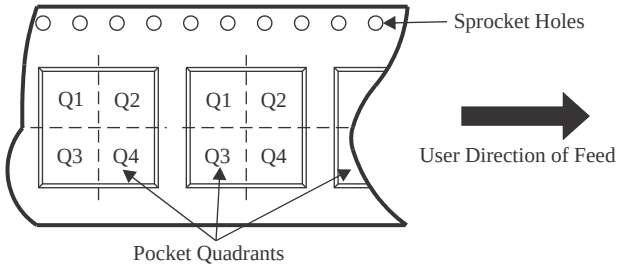

*All dimensions are nominal

Device	Package Type	Package Drawing	Pins	SPQ	Reel Diameter (mm)	Reel Width W1 (mm)	A0 (mm)	B0 (mm)	K0 (mm)	P1 (mm)	W (mm)	Pin1 Quadrant
DRV81080QPWPRQ1	HTSSOP	PWP	24	3000	330.0	16.4	6.95	8.3	1.6	8.0	16.0	Q1

TAPE AND REEL BOX DIMENSIONS

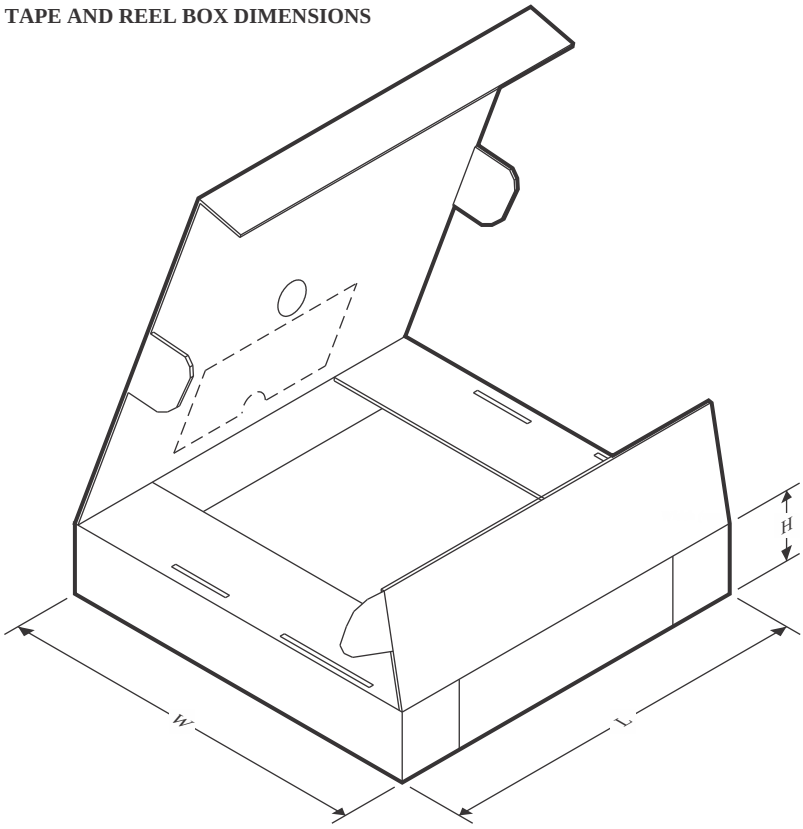

*All dimensions are nominal

Device	Package Type	Package Drawing	Pins	SPQ	Length (mm)	Width (mm)	Height (mm)
DRV81080QPWPRQ1	HTSSOP	PWP	24	3000	353.0	353.0	32.0

GENERIC PACKAGE VIEW

PWP 24

PowerPAD™ TSSOP - 1.2 mm max height

4.4 x 7.6, 0.65 mm pitch

PLASTIC SMALL OUTLINE

This image is a representation of the package family, actual package may vary.
Refer to the product data sheet for package details.

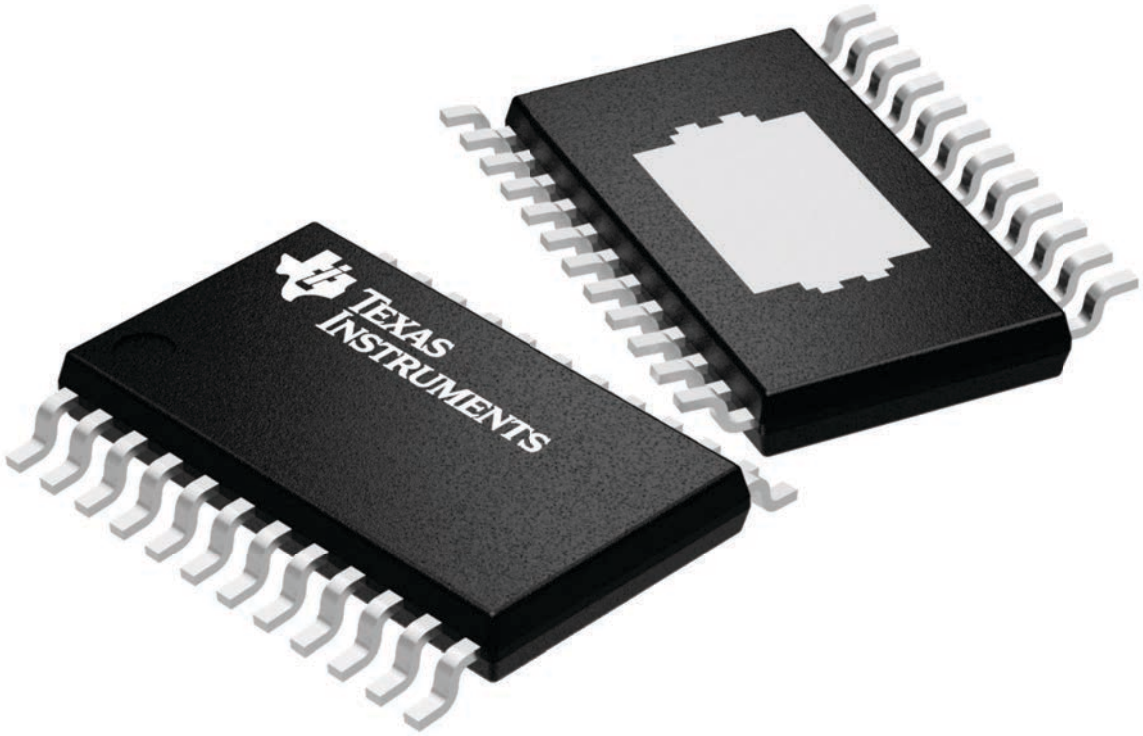

4224742/B

PACKAGE OUTLINE

PWP0024T



PowerPAD™ TSSOP - 1.2 mm max height

SMALL OUTLINE PACKAGE

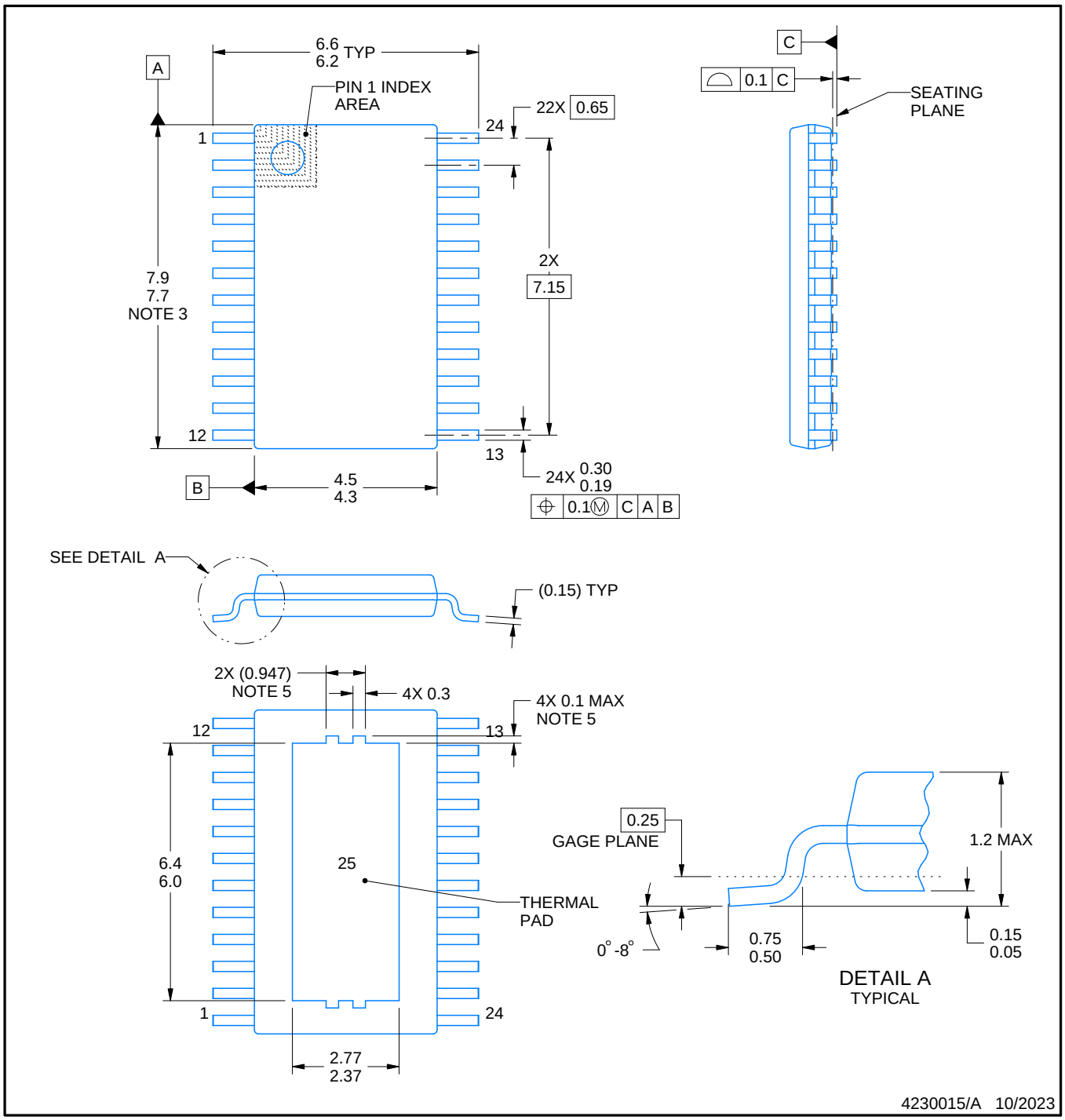

PowerPAD is a trademark of Texas Instruments.

NOTES:

1. All linear dimensions are in millimeters. Any dimensions in parenthesis are for reference only. Dimensioning and tolerancing per ASME Y14.5M.
2. This drawing is subject to change without notice.
3. This dimension does not include mold flash, protrusions, or gate burrs. Mold flash, protrusions, or gate burrs shall not exceed 0.15 mm per side.
4. Reference JEDEC registration MO-153.
5. Features may differ or may not be present.

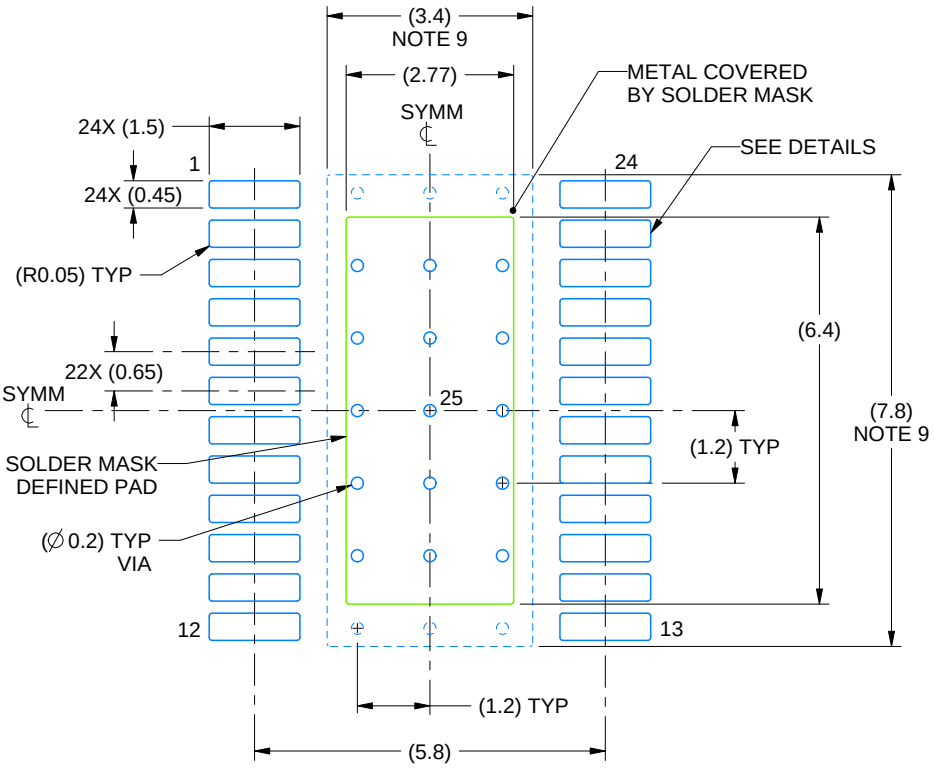

LAND PATTERN EXAMPLE
EXPOSED METAL SHOWN
SCALE: 8X

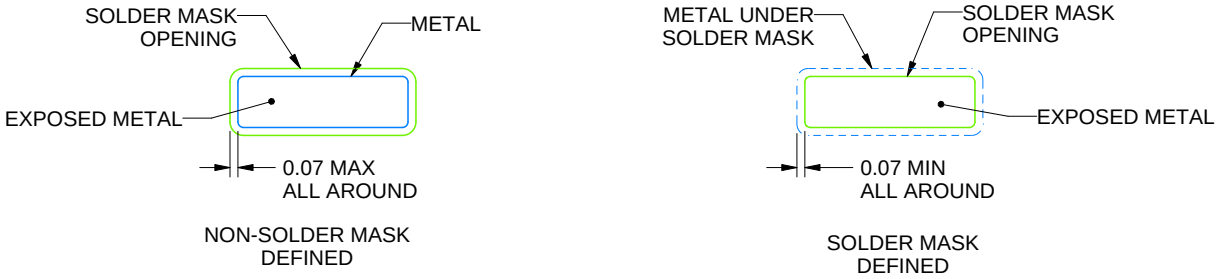

SOLDER MASK DETAILS

4230015/A 10/2023

NOTES: (continued)

6. Publication IPC-7351 may have alternate designs.
7. Solder mask tolerances between and around signal pads can vary based on board fabrication site.
8. This package is designed to be soldered to a thermal pad on the board. For more information, see Texas Instruments literature numbers SLMA002 (www.ti.com/lit/slma002) and SLMA004 (www.ti.com/lit/slma004).
9. Size of metal pad may vary due to creepage requirement.
10. Vias are optional depending on application, refer to device data sheet. It is recommended that vias under paste be filled, plugged or tented.

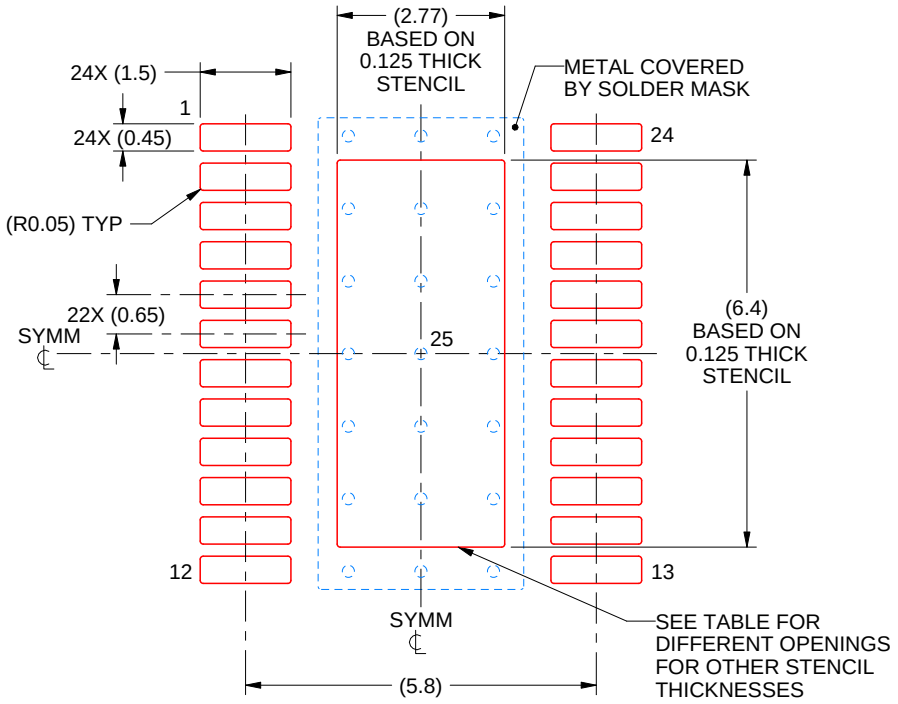

SOLDER PASTE EXAMPLE
BASED ON 0.125 mm THICK STENCIL
SCALE: 8X

STENCIL THICKNESS	SOLDER STENCIL OPENING
0.1	3.10 X 7.16
0.125	2.77 X 6.40 (SHOWN)
0.15	2.53 X 5.84
0.175	2.34 X 5.41

4230015/A 10/2023

NOTES: (continued)

11. Laser cutting apertures with trapezoidal walls and rounded corners may offer better paste release. IPC-7525 may have alternate design recommendations.
12. Board assembly site may have different recommendations for stencil design.

IMPORTANT NOTICE AND DISCLAIMER

TI PROVIDES TECHNICAL AND RELIABILITY DATA (INCLUDING DATASHEETS), DESIGN RESOURCES (INCLUDING REFERENCE DESIGNS), APPLICATION OR OTHER DESIGN ADVICE, WEB TOOLS, SAFETY INFORMATION, AND OTHER RESOURCES “AS IS” AND WITH ALL FAULTS, AND DISCLAIMS ALL WARRANTIES, EXPRESS AND IMPLIED, INCLUDING WITHOUT LIMITATION ANY IMPLIED WARRANTIES OF MERCHANTABILITY, FITNESS FOR A PARTICULAR PURPOSE OR NON-INFRINGEMENT OF THIRD PARTY INTELLECTUAL PROPERTY RIGHTS.

These resources are intended for skilled developers designing with TI products. You are solely responsible for (1) selecting the appropriate TI products for your application, (2) designing, validating and testing your application, and (3) ensuring your application meets applicable standards, and any other safety, security, regulatory or other requirements.

These resources are subject to change without notice. TI grants you permission to use these resources only for development of an application that uses the TI products described in the resource. Other reproduction and display of these resources is prohibited. No license is granted to any other TI intellectual property right or to any third party intellectual property right. TI disclaims responsibility for, and you fully indemnify TI and its representatives against any claims, damages, costs, losses, and liabilities arising out of your use of these resources.

TI’s products are provided subject to TI’s Terms of Sale, TI’s General Quality Guidelines, or other applicable terms available either on ti.com or provided in conjunction with such TI products. TI’s provision of these resources does not expand or otherwise alter TI’s applicable warranties or warranty disclaimers for TI products. Unless TI explicitly designates a product as custom or customer-specified, TI products are standard, catalog, general purpose devices.

TI objects to and rejects any additional or different terms you may propose.

Copyright © 2026, Texas Instruments Incorporated

Last updated 10/2025