ISO774x-Q1 Automotive, High-Speed, Reinforced Quad-Channel Digital Isolators

1 Features

- Qualified for automotive applications
- AEC-Q100 qualified with the following results:
  - Device temperature Grade 1: –40°C to 125°C ambient operating temperature
- Functional Safety-Capable
  - Documentation available to aid functional safety system design: ISO7740-Q1, ISO7741-Q1, ISO7742-Q1
- 100Mbps data rate
- Robust isolation barrier:
  - >30-year projected lifetime at $1500V_{RMS}$ working voltage
  - Up to $5700V_{RMS}$ isolation rating
  - Up to 12.8kV surge capability
  - ±100kV/µs typical CMTI
- Wide supply range: 2.25V to 5.5V
- 2.25V to 5.5V level translation
- Default output *high* (ISO774x) and *low* (ISO774xF) options
- Low power consumption, typical 1.5mA per channel at 1Mbps
- Low propagation delay: 10.7ns typical (5V Supplies)
- Robust electromagnetic compatibility (EMC)
  - System-level ESD, EFT, and surge immunity
  - ±8kV IEC 61000-4-2 contact discharge protection across isolation barrier
  - Low emissions
- Extra-wide SOIC (DWW-16), wide-SOIC (DW-16) and QSOP (DBQ-16) package options
- Safety-related certifications:
  - DIN EN IEC 60747-17 (VDE 0884-17)
  - UL 1577 component recognition program
  - IEC 61010-1, IEC 62368-1, IEC 60601-1, and GB 4943.1 certifications

2 Applications

- Hybrid, electric and powertrain system (EV/HEV)
  - Battery management system (BMS)
  - On-board charger
  - Traction inverter
  - DC/DC converter
  - Inverter and motor control

3 Description

The ISO774x-Q1 automotive devices are high-performance, quad-channel digital isolators with $5700V_{RMS}$ (DWW package), $5000V_{RMS}$ (DW package) and $3000V_{RMS}$ (DBQ package) isolation ratings per UL 1577. This family of devices has reinforced insulation ratings according to VDE, CSA, TUV and CQC.

The ISO774x-Q1 devices provide high electromagnetic immunity and low emissions at low power consumption, while isolating CMOS or LVCMOS digital I/Os. Each isolation channel has a logic input and output buffer separated by a double capacitive silicon dioxide (SiO_2) insulation barrier. These devices come with enable pins which can be used to put the respective outputs in high impedance for multi-controller driving applications and to reduce power consumption. The ISO7740-Q1 device has all four channels in the same direction, the ISO7741-Q1 device has three forward and one reverse-direction channels, and the ISO7742-Q1 device has two forward and two reverse-direction channels. If the input power or signal is lost, default output is *high* for devices without suffix F and *low* for devices with suffix F. See the *Device Functional Modes* section for further details.

Package Information

PART NUMBER(1)	PACKAGE	PACKAGE SIZE(2)
ISO7741-Q1	DWW (SOIC, 16)	10.30mm × 14.0mm
ISO7740-Q1 ISO7741-Q1 ISO7742-Q1	DW (SOIC, 16)	10.30mm × 7.50mm
	DBQ (SSOP, 16)	4.90mm × 3.90mm

(1) For all available packages, see the orderable addendum at the end of the data sheet.
(2) The package size (length × width) is a nominal value and includes pins, where applicable.

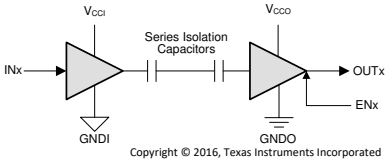

V_{CCI}=Input supply, V_{CCO}=Output supply
GNDI=Input ground, GNDO=Output ground

Simplified Schematic

An IMPORTANT NOTICE at the end of this data sheet addresses availability, warranty, changes, use in safety-critical applications, intellectual property matters and other important disclaimers. PRODUCTION DATA.

Table of Contents

1 Features....1
2 Applications....1
3 Description....1
4 Pin Configuration and Functions....2
5 Specifications....5
5.1 Absolute Maximum Ratings....5
5.2 ESD Ratings....5
5.3 Recommended Operating Conditions....6
5.4 Thermal Information....7
5.5 Power Ratings....7
5.6 Insulation Specifications....8
5.7 Safety-Related Certifications....10
5.8 Safety Limiting Values....10
5.9 Electrical Characteristics—5-V Supply....12
5.10 Supply Current Characteristics—5-V Supply....13
5.11 Electrical Characteristics—3.3-V Supply....14
5.12 Supply Current Characteristics—3.3-V Supply....15
5.13 Electrical Characteristics—2.5-V Supply....16
5.14 Supply Current Characteristics—2.5-V Supply....17
5.15 Switching Characteristics—5-V Supply....18
5.16 Switching Characteristics—3.3-V Supply....19
5.17 Switching Characteristics—2.5-V Supply....20
5.18 Insulation Characteristics Curves....21
5.19 Typical Characteristics....22
6 Parameter Measurement Information....24
7 Detailed Description....26
7.1 Overview....26
7.2 Functional Block Diagram....26
7.3 Feature Description....27
7.4 Device Functional Modes....28
8 Application and Implementation....30
8.1 Application Information....30
8.2 Typical Application....30
8.3 Power Supply Recommendations....33
8.4 Layout....34
9 Device and Documentation Support....35
9.1 Documentation Support....35
9.2 Related Links....35
9.3 Receiving Notification of Documentation Updates....35
9.4 Support Resources....35
9.5 Trademarks....35
9.6 Electrostatic Discharge Caution....35
9.7 Glossary....35
10 Revision History....36
11 Mechanical, Packaging, and Orderable Information....37

4 Pin Configuration and Functions

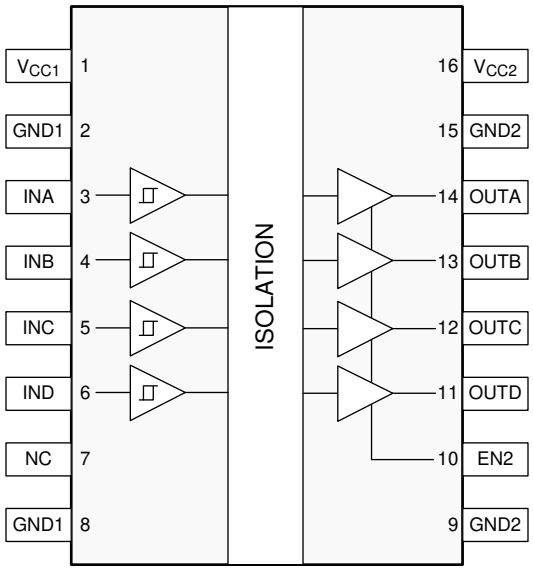

Figure 4-1. ISO7740-Q1 DW and DBQ Packages 16-Pin SOIC-WB and QSOP Top View

Copyright © 2025 Texas Instruments Incorporated

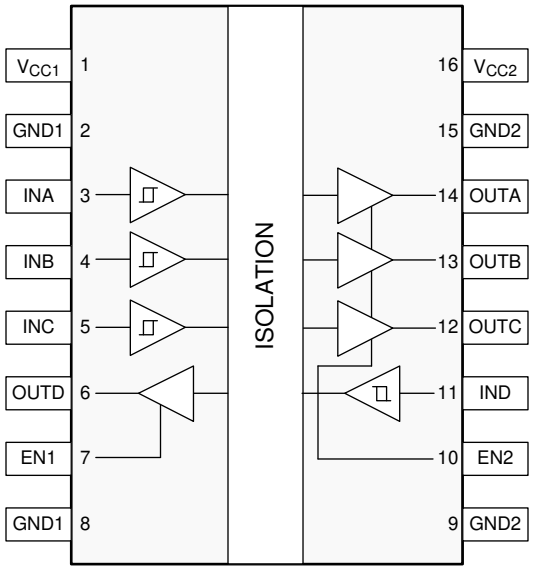

Figure 4-2. ISO7741-Q1 DWW, DW and DBQ Packages 16-Pin SOIC-Extra-WB, SOIC-WB and QSOP Top View

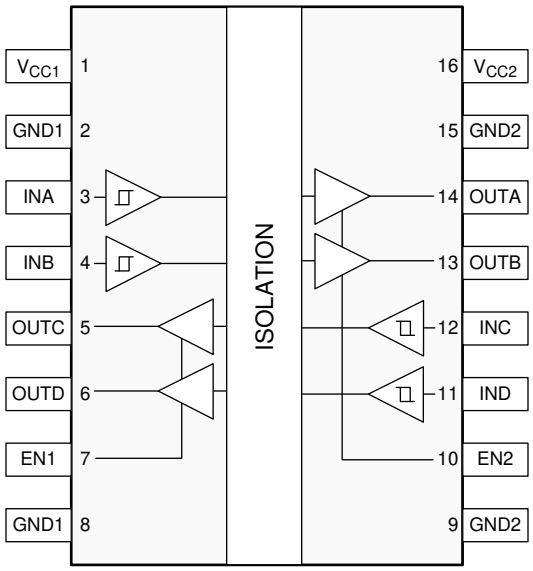

Figure 4-3. ISO7742-Q1 DW and DBQ Packages 16-Pin SOIC-WB and QSOP Top View

Copyright © 2025 Texas Instruments Incorporated

Table 4-1. Pin Functions

PIN				Type[1]	DESCRIPTION
NAME	ISO7740-Q1	ISO7741-Q1	ISO7742-Q1		
EN1	—	7	7	I	Output enable 1. Output pins on side 1 are enabled when EN1 is high or open and in high-impedance state when EN1 is low.
EN2	10	10	10	I	Output enable 2. Output pins on side 2 are enabled when EN2 is high or open and in high-impedance state when EN2 is low.
GND1	2	2	2	—	Ground connection for V_{CC1}
	8	8	8		
GND2	9	9	9	—	Ground connection for V_{CC2}
	15	15	15		
INA	3	3	3	I	Input, channel A
INB	4	4	4	I	Input, channel B
INC	5	5	12	I	Input, channel C
IND	6	11	11	I	Input, channel D
NC	7	—	—	—	Not connected
OUTA	14	14	14	O	Output, channel A
OUTB	13	13	13	O	Output, channel B
OUTC	12	12	5	O	Output, channel C
OUTD	11	6	6	O	Output, channel D
V_{CC1}	1	1	1	—	Power supply, side 1
V_{CC2}	16	16	16	—	Power supply, side 2

(1) I = Input; O = Output

Copyright © 2025 Texas Instruments Incorporated

5 Specifications

5.1 Absolute Maximum Ratings

See(1)

		MIN	MAX	UNIT
V_{CC1}, V_{CC2}	Supply voltage (2)	-0.5	6	V
V	Voltage at INx, OUTx, ENx	-0.5	V_{CCX} + 0.5 (3)	V
I_O	Output current	-15	15	mA
T_J	Junction temperature		150	°C
T_{stg}	Storage temperature	-65	150	°C

(1) Operation outside the Absolute Maximum Ratings may cause permanent device damage. Absolute Maximum Ratings do not imply functional operation of the device at these or any other conditions beyond those listed under Recommended Operating Conditions. If used outside the Recommended Operating Conditions but within the Absolute Maximum Ratings, the device may not be fully functional, and this may affect device reliability, functionality, performance, and shorten the device lifetime.
(2) All voltage values except differential I/O bus voltages are with respect to the local ground terminal (GND1 or GND2) and are peak voltage values
(3) Maximum voltage must not exceed 6 V.

5.2 ESD Ratings

			VALUE	UNIT
$V_{(ESD)}$	Electrostatic discharge	Human-body model (HBM), per AEC Q100-002 HBM ESD Classification Level 3A (1)	±6000	V
		Charged-device model (CDM), per AEC Q100-011 V CDM ESD Classification Level C6	±1500	V
		Contact discharge per IEC 61000-4-2; Isolation barrier withstand test (2) (3)	±8000	V

(1) AEC Q100-002 indicates that HBM stressing shall be in accordance with the ANSI/ESDA/JEDEC JS-001 specification.
(2) IEC ESD strike is applied across the barrier with all pins on each side tied together creating a two-terminal device.
(3) Testing is carried out in air or oil to determine the intrinsic contact discharge capability of the device.

Copyright © 2025 Texas Instruments Incorporated

5.3 Recommended Operating Conditions

over operating free-air temperature range (unless otherwise noted)

			MIN	NOM	MAX	UNIT
V_{CC1}, V_{CC2}	Supply Voltage		2.25		5.5	V
$V_{CC(UVLO+)}$	UVLO threshold when supply voltage is rising			2	2.25	V
$V_{CC(UVLO-)}$	UVLO threshold when supply voltage is falling		1.7	1.8		V
$V_{HYS(UVLO)}$	Supply voltage UVLO hysteresis		100	200		mV
I_{OH}	High level output current	V_{CCO} = 5 V (1)	-4			mA
		V_{CCO} = 3.3 V	-2			
		V_{CCO} = 2.5 V	-1			
I_{OL}	Low level output current	V_{CCO} = 5 V			4	mA
		V_{CCO} = 3.3 V			2	
		V_{CCO} = 2.5 V			1	
V_{IH}	High level Input voltage		0.7 x V_{CCI} (1)		V_{CCI}	V
V_{IL}	Low level Input voltage		0		0.3 x V_{CCI}	V
DR	Data Rate(2)		0		100	Mbps
T_A	Ambient temperature		-40	25	125	°C

(1) V_{CCI} = Input-side V_{CC}; V_{CCO} = Output-side V_{CC}.
(2) 100 Mbps is the maximum specified data rate, although higher data rates are possible.

Copyright © 2025 Texas Instruments Incorporated

5.4 Thermal Information

THERMAL METRIC[1]		ISO774x-Q1			UNIT
		DWW (SOIC)	DW (SOIC)	DBQ (QSOP)	
		16 PINS	16 PINS	16 PINS	
$R_{\theta JA}$	Junction-to-ambient thermal resistance	58.3	83.4	109	°C/W
$R_{\theta JC(top)}$	Junction-to-case (top) thermal resistance	21.4	46	54.4	°C/W
$R_{\theta JB}$	Junction-to-board thermal resistance	30.5	48	51.9	°C/W
ψ_{JT}	Junction-to-top characterization parameter	7.1	19.1	14.2	°C/W
ψ_{JB}	Junction-to-board characterization parameter	29.8	47.5	51.4	°C/W
$R_{\theta JC(bot)}$	Junction-to-case (bottom) thermal resistance	—	—	—	°C/W

(1) For more information about traditional and new thermal metrics, see the *Semiconductor and IC Package Thermal Metrics* application note.

5.5 Power Ratings

PARAMETER		TEST CONDITIONS	MIN	TYP	MAX	UNIT
ISO7740-Q1						
P_D	Maximum power dissipation (both sides)	V_{CC1} = V_{CC2} = 5.5 V, T_J = 150°C, C_L = 15 pF, Input a 50-MHz 50% duty cycle square wave			210	mW
P_{D1}	Maximum power dissipation (side-1)				45	mW
P_{D2}	Maximum power dissipation (side-2)				165	mW
ISO7741-Q1						
P_D	Maximum power dissipation (both sides)	V_{CC1} = V_{CC2} = 5.5 V, T_J = 150°C, C_L = 15 pF, Input a 50-MHz 50% duty cycle square wave			210	mW
P_{D1}	Maximum power dissipation (side-1)				75	mW
P_{D2}	Maximum power dissipation (side-2)				135	mW
ISO7742-Q1						
P_D	Maximum power dissipation (both sides)	V_{CC1} = V_{CC2} = 5.5 V, T_J = 150°C, C_L = 15 pF, Input a 50-MHz 50% duty cycle square wave			210	mW
P_{D1}	Maximum power dissipation (side-1)				105	mW
P_{D2}	Maximum power dissipation (side-2)				105	mW

Copyright © 2025 Texas Instruments Incorporated

5.6 Insulation Specifications

PARAMETER		TEST CONDITIONS	VALUE			UNIT
			DWW-16	DW-16	DBQ-16	
CLR	External clearance(1)	Shortest terminal-to-terminal distance through air	>14.5	>8	>3.7	mm
CPG	External creepage(1)	Shortest terminal-to-terminal distance across the package surface	>14.5	>8	>3.7	mm
DTI	Distance through the insulation	Minimum internal gap (internal clearance)	>21	>17	>17	µm
CTI	Comparative tracking index	DIN EN 60112 (VDE 0303-11); IEC 60112	>600	>600	>600	V
	Material group	According to IEC 60664-1	I	I	I	
	Overvoltage category per IEC 60664-1	Rated mains voltage ≤ 300 V_{RMS}	I-IV	I-IV	I-III	
		Rated mains voltage ≤ 600 V_{RMS}	I-IV	I-IV	n/a	
		Rated mains voltage ≤ 1000 V_{RMS}	I-IV	I-III	n/a	
DIN EN IEC 60747-17 (VDE 0884-17) (2)						
V_{IORM}	Maximum repetitive peak isolation voltage	AC voltage (bipolar)	2828	2121	566	V_{PK}
V_{IOWM}	Maximum working isolation voltage	AC voltage; Time dependent dielectric breakdown (TDDB) Test; See Section 8.2.3.1	2000	1500	400	V_{RMS}
		DC voltage	2828	2121	566	V_{DC}
V_{IOTM}	Maximum transient isolation voltage	$V_{TEST} = V_{IOTM}$, t = 60 s (qualification); $V_{TEST} = 1.2 \times V_{IOTM}$, t= 1 s (100% production)	8000	8000	4242	V_{PK}
V_{IMP}	Maximum impulse voltage(3)	Tested in air, 1.2/50-µs waveform per IEC 62368-1	9600	8000	4000	V_{PK}
V_{IOSM}	Maximum surge isolation voltage(4)	$V_{IOSM} \geq 1.3 \times V_{IMP}$; Tested in oil (qualification test), 1.2/50-µs waveform per IEC 62368-1	12800	12800	10000	V_{PK}
q_{pd}	Apparent charge(5)	Method a, After Input-output safety test subgroup 2/3, $V_{ini} = V_{IOTM}$, t_{ini} = 60 s; $V_{pd(m)} = 1.2 \times V_{IORM}$, t_m = 10 s	≤5	≤5	≤5	pC
		Method a, After environmental tests subgroup 1, $V_{ini} = V_{IOTM}$, t_{ini} = 60 s; $V_{pd(m)} = 1.6 \times V_{IORM}$, t_m = 10 s	≤5	≤5	≤5	
		Method b: At routine test (100% production) and preconditioning (type test); $V_{ini} = 1.2 \times V_{IOTM}$, t_{ini} = 1 s; $V_{pd(m)} = 1.875 \times V_{IORM}$, t_m = 1 s (method b1) or $V_{pd(m)} = V_{ini}$, $t_m = t_{ini}$ (method b2)	≤5	≤5	≤5	
C_{IO}	Barrier capacitance, input to output(6)	V_{IO} = 0.4 x sin (2πft), f = 1 MHz	≅1	≅1	≅1	pF
R_{IO}	Isolation resistance(6)	V_{IO} = 500 V, T_A = 25°C	$>10^{12}$	$>10^{12}$	$>10^{12}$	Ω
		V_{IO} = 500 V, 100°C ≤ T_A ≤ 125°C	$>10^{11}$	$>10^{11}$	$>10^{11}$	
		V_{IO} = 500 V at T_S = 150°C	$>10^{9}$	$>10^{9}$	$>10^{9}$	
	Pollution degree		2	2	2	
	Climatic category		55/125/21	55/125/21	55/125/21	
UL 1577						
V_{ISO}	Maximum withstanding isolation voltage	$V_{TEST} = V_{ISO}$, t = 60 s (qualification), $V_{TEST} = 1.2 \times V_{ISO}$, t = 1 s (100% production)	5700	5000	3000	V_{RMS}

(1) Creepage and clearance requirements should be applied according to the specific equipment isolation standards of an application. Care should be taken to maintain the creepage and clearance distance of a board design to ensure that the mounting pads of the isolator on the printed-circuit board do not reduce this distance. Creepage and clearance on a printed-circuit board become equal in certain cases. Techniques such as inserting grooves and/or ribs on a printed-circuit board are used to help increase these specifications.

(2) This coupler is suitable for *safe electrical insulation* only within the safety ratings. Compliance with the safety ratings shall be ensured by means of suitable protective circuits.

Copyright © 2025 Texas Instruments Incorporated

(3) Testing is carried out in air to determine the surge immunity of the package.
(4) Testing is carried out in oil to determine the intrinsic surge immunity of the isolation barrier.
(5) Apparent charge is electrical discharge caused by a partial discharge (pd).
(6) All pins on each side of the barrier tied together creating a two-terminal device.

Copyright © 2025 Texas Instruments Incorporated

5.7 Safety-Related Certifications

VDE	CSA	UL	CQC	TUV
Certified according to DIN EN IEC 60747-17 (VDE 0884-17)	Certified according to IEC 62368-1 and IEC 60601-1	Certified according to UL 1577 Component Recognition Program	Certified according to GB 4943.1	Certified according to EN 61010-1 and EN 62368-1
Maximum transient isolation voltage, 8000 V_{PK} (DWW-16, DW-16, Reinforced) and 4242 V_{PK} (DBQ-16); Maximum repetitive peak isolation voltage, 2828 V_{PK} (DWW-16, Reinforced), 2121 V_{PK} (DW-16, Reinforced) and 566 V_{PK} (DBQ-16); Maximum surge isolation voltage, 12800 V_{PK} (DWW-16, DW-16, Reinforced) and 10000 V_{PK} (DBQ-16)	Reinforced insulation per CSA 62368-1 and IEC 62368-1, 1450 V_{RMS} (DWW-16), 600 V_{RMS} (DW-16) and 370 V_{RMS} (DBQ-16) max working voltage (pollution degree 2, material group I); 2 MOPP (Means of Patient Protection) per CSA 60601-1 and IEC 60601-1, 400 V_{RMS} (DWW-16) and 250 V_{RMS} (DW-16) max working voltage	DWW-16: Single Protection, 5700 V_{RMS}; DW-16: Single protection, 5000 V_{RMS}; DBQ-16: Single protection, 3000 V_{RMS}	DWW-16: Reinforced Insulation, Altitude ≤ 5000 m, Tropical Climate, 1450 V_{RMS} maximum working voltage; DW-16: Reinforced Insulation, Altitude ≤ 5000 m, Tropical Climate, 700 V_{RMS} maximum working voltage; DBQ-16: Basic Insulation, Altitude ≤ 5000 m, Tropical Climate, 400 V_{RMS} maximum working voltage	5700 V_{RMS} (DWW-16), 5000 V_{RMS} (DW-16) and 3000 V_{RMS} (DBQ-16) Reinforced insulation per EN 61010-1 up to working voltage of 1000 V_{RMS} (DWW-16), 600 V_{RMS} (DW-16) and 300 V_{RMS} (DBQ-16); 5700 V_{RMS} (DWW-16), 5000 V_{RMS} (DW-16) and 3000 V_{RMS} (DBQ-16) Reinforced insulation per EN 62368-1 up to working voltage of 1450 V_{RMS} (DWW-16), 600 V_{RMS} (DW-16) and 370 V_{RMS} (DBQ-16)
Reinforced certificate: 40040142	Master contract number: 220991	File number: E181974	Certificate numbers: CQC15001121716 (DWx-16) CQC18001199097 (DBQ-16)	Client ID number: 77311

5.8 Safety Limiting Values

Safety limiting(1) intends to minimize potential damage to the isolation barrier upon failure of input or output circuitry. A failure of the I/O can allow low resistance to ground or the supply and, without current limiting, dissipate sufficient power to overheat the die and damage the isolation barrier potentially leading to secondary system failures.

PARAMETER		TEST CONDITIONS	MIN	TYP	MAX	UNIT
DWW-16 PACKAGE						
I_S	Safety input, output, or supply current	$R_{\theta JA}$ = 58.3 °C/W, V_I = 5.5 V, T_J = 150°C, T_A = 25°C, see Figure 5-1			390	mA
		$R_{\theta JA}$ = 58.3 °C/W, V_I = 3.6 V, T_J = 150°C, T_A = 25°C, see Figure 5-1			596	mA
		$R_{\theta JA}$ = 58.3 °C/W, V_I = 2.75 V, T_J = 150°C, T_A = 25°C, see Figure 5-1			780	mA
P_S	Safety input, output, or total power	$R_{\theta JA}$ = 58.3 °C/W, T_J = 150°C, T_A = 25°C, see Figure 5-4			2144	mW
T_S	Maximum safety temperature				150	°C
DW-16 PACKAGE						
I_S	Safety input, output, or supply current	$R_{\theta JA}$ =83.4°C/W, V_I = 5.5 V, T_J = 150°C, T_A = 25°C, see Figure 5-2			273	mA
		$R_{\theta JA}$ = 83.4°C/W, V_I = 3.6 V, T_J = 150°C, T_A = 25°C, see Figure 5-2			416	
		$R_{\theta JA}$ = 83.4°C/W, V_I = 2.75 V, T_J = 150°C, T_A = 25°C, see Figure 5-2			545	
P_S	Safety input, output, or total power	$R_{\theta JA}$ = 83.4°C/W, T_J = 150°C, T_A = 25°C, see Figure 5-5			1499	mW
T_S	Maximum safety temperature				150	°C
DBQ-16 PACKAGE						

Copyright © 2025 Texas Instruments Incorporated

Safety limiting(1) intends to minimize potential damage to the isolation barrier upon failure of input or output circuitry. A failure of the I/O can allow low resistance to ground or the supply and, without current limiting, dissipate sufficient power to overheat the die and damage the isolation barrier potentially leading to secondary system failures.

PARAMETER		TEST CONDITIONS	MIN	TYP	MAX	UNIT
I_S	Safety input, output, or supply current	$R_{\theta JA}$ =109°C/W, V_I = 5.5 V, T_J = 150°C, T_A = 25°C, see Figure 5-3			209	mA
		$R_{\theta JA}$ = 109°C/W, V_I = 3.6 V, T_J = 150°C, T_A = 25°C, see Figure 5-3			319	
		$R_{\theta JA}$ = 109°C/W, V_I = 2.75 V, T_J = 150°C, T_A = 25°C, see Figure 5-3			417	
P_S	Safety input, output, or total power	$R_{\theta JA}$ = 109°C/W, T_J = 150°C, T_A = 25°C, see Figure 5-6			1147	mW
T_S	Maximum safety temperature				150	°C

(1) The maximum safety temperature, T_S, has the same value as the maximum junction temperature, T_J, specified for the device. The I_S and P_S parameters represent the safety current and safety power respectively. The maximum limits of I_S and P_S should not be exceeded. These limits vary with the ambient temperature, T_A.
The junction-to-air thermal resistance, $R_{\theta JA}$, in Section 5.4 is that of a device installed on a high-K test board for leaded surface-mount packages. Use these equations to calculate the value for each parameter:
$T_J = T_A + R_{\theta JA} \times P$, where P is the power dissipated in the device.
$T_{J(max)} = T_S = T_A + R_{\theta JA} \times P_S$, where $T_{J(max)}$ is the maximum allowed junction temperature.
$P_S = I_S \times V_I$, where V_I is the maximum input voltage.

Copyright © 2025 Texas Instruments Incorporated

5.9 Electrical Characteristics—5-V Supply

V_{CC1} = V_{CC2} = 5 V ±10% (over recommended operating conditions unless otherwise noted)

PARAMETER		TEST CONDITIONS	MIN	TYP	MAX	UNIT
V_{OH}	High-level output voltage	I_{OH} = -4 mA; See Figure 6-1	V_{CCO} - 0.4 (1)	4.8		V
V_{OL}	Low-level output voltage	I_{OL} = 4 mA; See Figure 6-1		0.2	0.4	V
$V_{IT+(IN)}$	Rising input switching threshold			0.6 x V_{CCI}	0.7 x V_{CCI}	V
$V_{IT-(IN)}$	Falling input switching threshold		0.3 x V_{CCI}	0.4 x V_{CCI}		V
$V_{I(HYS)}$	Input threshold voltage hysteresis		0.1 x V_{CCI}	0.2 x V_{CCI}		V
I_{IH}	High-level input current	V_{IH} = V_{CCI} (1) at INx			10	µA
I_{IL}	Low-level input current	V_{IL} = 0 V at INx	-10			µA
I_{IH}	High-level input current	V_{IH} = V_{CCI} (1) at ENx			20	µA
I_{IL}	Low-level input current	V_{IL} = 0 V at ENx	-20			µA
CMTI	Common mode transient immunity	V_I = V_{CCI} or 0 V, V_{CM} = 1200 V; See Figure 6-4	85	100		kV/µs
C_I	Input Capacitance (2)	V_I = V_{CC}/ 2 + 0.4×sin(2πft), f = 1 MHz, V_{CC} = 5 V		2		pF

(1) V_{CCI} = Input-side V_{CC}; V_{CCO} = Output-side V_{CC}
(2) Measured from input pin to same side ground.

Copyright © 2025 Texas Instruments Incorporated

5.10 Supply Current Characteristics—5-V Supply

V_{CC1} = V_{CC2} = 5 V ±10% (over recommended operating conditions unless otherwise noted)

PARAMETER	TEST CONDITIONS		SUPPLY CURRENT	MIN	TYP	MAX	UNIT
ISO7740-Q1							
Supply current - Disable	EN2 = 0 V; V_I = V_{CC1} (1)(ISO7740-Q1); V_I = 0 V (ISO7740-Q1 with F suffix)		I_{CC1}		1.2	2.3	mA
			I_{CC2}		0.3	0.8	
	EN2 = 0 V; V_I = 0 V (1)(ISO7740-Q1); V_I = V_{CC1} (ISO7740-Q1 with F suffix)		I_{CC1}		5.5	7.8	
			I_{CC2}		0.3	0.8	
Supply current - DC signal	EN2 = V_{CC2}; V_I = V_{CC1} (1)(ISO7740-Q1); V_I = 0 V (ISO7740-Q1 with F suffix)		I_{CC1}		1.2	2.3	
			I_{CC2}		2	3.6	
	EN2 = V_{CC2}; V_I = 0 V (ISO7740-Q1); V_I = V_{CC1} (ISO7740-Q1 with F suffix)		I_{CC1}		5.5	7.8	
			I_{CC2}		2.2	3.9	
Supply current - AC signal	All channels switching with square wave clock input; C_L = 15 pF	1 Mbps	I_{CC1}		3.3	4.7	
			I_{CC2}		2.3	4	
		10 Mbps	I_{CC1}		3.4	4.9	
			I_{CC2}		4.2	6.4	
		100 Mbps	I_{CC1}		3.8	6.6	
			I_{CC2}		22.7	29.5	
ISO7741-Q1							
Supply current - Disable	EN1 = EN2 = 0 V; V_I = V_{CCI} (ISO7741-Q1); V_I = 0 V (ISO7741-Q1 with F suffix)		I_{CC1}		1	2.2	mA
			I_{CC2}		0.8	1.6	
	EN1 = EN2 = 0 V; V_I = 0 V (ISO7741-Q1); V_I = V_{CCI} (ISO7741-Q1 with F suffix)		I_{CC1}		4.3	6.3	
			I_{CC2}		1.8	2.8	
Supply current - DC signal	EN1 = EN2 = V_{CCI}; V_I = V_{CCI} (1)(ISO7741-Q1); V_I = 0 V (ISO7741-Q1 with F suffix)		I_{CC1}		1.5	2.9	
			I_{CC2}		2	3.7	
	EN1 = EN2 = V_{CCI}; V_I = 0 V (ISO7741-Q1); V_I = V_{CCI} (ISO7741-Q1 with F suffix)		I_{CC1}		4.8	6.8	
			I_{CC2}		3.2	5.2	
Supply current - AC signal	All channels switching with square wave clock input; C_L = 15 pF	1 Mbps	I_{CC1}		3.2	4.8	
			I_{CC2}		2.8	4.6	
		10 Mbps	I_{CC1}		3.7	5.5	
			I_{CC2}		4.2	6.4	
		100 Mbps	I_{CC1}		8.6	12.5	
			I_{CC2}		18	24	
ISO7742-Q1							
Supply current - Disable	EN1 = EN2 = 0 V; V_I = V_{CCI} (1)(ISO7742-Q1); V_I = 0 V (ISO7742-Q1 with F suffix)		I_{CC1} , I_{CC2}		0.9	2	mA
	EN1 = EN2 = 0 V; V_I = 0 V (1)(ISO7742-Q1); V_I = V_{CCI} (ISO7742-Q1 with F suffix)		I_{CC1} , I_{CC2}		3	4.6	
Supply current - DC signal	EN1 = EN2 = V_{CCI}; V_I = V_{CCI} (1)(ISO7742-Q1); V_I = 0 V (ISO7742-Q1 with F suffix)		I_{CC1} , I_{CC2}		1.7	3.5	
	EN1 = EN2 = V_{CCI}; V_I = 0 V (ISO7742-Q1); V_I = V_{CCI} (ISO7742-Q1 with F suffix)		I_{CC1} , I_{CC2}		4	6	
Supply current - AC signal	All channels switching with square wave clock input; C_L = 15 pF	1 Mbps	I_{CC1}, I_{CC2}		3	4.9	
		10 Mbps	I_{CC1}, I_{CC2}		4	6	
		100 Mbps	I_{CC1}, I_{CC2}		13.4	18.3	

(1) V_{CCI} = Input-side V_{CC}

Copyright © 2025 Texas Instruments Incorporated

5.11 Electrical Characteristics—3.3-V Supply

V_{CC1} = V_{CC2} = 3.3 V ±10% (over recommended operating conditions unless otherwise noted)

PARAMETER		TEST CONDITIONS	MIN	TYP	MAX	UNIT
V_{OH}	High-level output voltage	I_{OH} = -2mA; See Figure 6-1	V_{CCO} - 0.3 (1)	3.2		V
V_{OL}	Low-level output voltage	I_{OL} = 2mA; See Figure 6-1		0.1	0.3	V
$V_{IT+(IN)}$	Rising input switching threshold			0.6 x V_{CCI}	0.7 x V_{CCI} (1)	V
$V_{IT-(IN)}$	Falling input switching threshold		0.3 x V_{CCI}	0.4 x V_{CCI}		V
$V_{I(HYS)}$	Input threshold voltage hysteresis		0.1 x V_{CCI}	0.2 x V_{CCI}		V
I_{IH}	High-level input current	V_{IH} = V_{CCI} (1) at INx			10	µA
I_{IL}	Low-level input current	V_{IL} = 0 V at INx	-10			µA
I_{IH}	High-level input current	V_{IH} = V_{CCI} (1) at ENx			30	µA
I_{IL}	Low-level input current	V_{IL} = 0 V at ENx	-30			µA
CMTI	Common mode transient immunity	V_I = V_{CCI} or 0 V, V_{CM} = 1200 V; See Figure 6-4	85	100		kV/µs

(1) V_{CCI} = Input-side V_{CC}; V_{CCO} = Output-side V_{CC}

Copyright © 2025 Texas Instruments Incorporated

5.12 Supply Current Characteristics—3.3-V Supply

V_{CC1} = V_{CC2} = 3.3 V ±10% (over recommended operating conditions unless otherwise noted)

PARAMETER	TEST CONDITIONS		SUPPLY CURRENT	MIN	TYP	MAX	UNIT
ISO7740-Q1							
Supply current - Disable	EN2 = 0 V; V_I = V_{CC1} (1)(ISO7740-Q1); V_I = 0 V (ISO7740-Q1 with F suffix)		I_{CC1}		1.2	2.3	mA
			I_{CC2}		0.3	0.7	
	EN2 = 0 V; V_I = 0 V (1)(ISO7740-Q1); V_I = V_{CC1} (ISO7740-Q1 with F suffix)		I_{CC1}		5.5	7.8	
			I_{CC2}		0.3	0.7	
Supply current - DC signal	EN2 = V_{CC2}; V_I = V_{CC1} (1)(ISO7740-Q1); V_I = 0 V (ISO7740-Q1 with F suffix)		I_{CC1}		1.2	2.2	
			I_{CC2}		1.9	3.6	
	EN2 = V_{CC2}; V_I = 0 V (ISO7740-Q1); V_I = V_{CC1} (ISO7740-Q1 with F suffix)		I_{CC1}		5.5	7.8	
			I_{CC2}		2.2	3.9	
Supply current - AC signal	All channels switching with square wave clock input; C_L = 15 pF	1 Mbps	I_{CC1}		3.3	4.7	
			I_{CC2}		2.2	3.9	
		10 Mbps	I_{CC1}		3.4	4.7	
			I_{CC2}		3.6	5.6	
		100 Mbps	I_{CC1}		3.3	5.7	
			I_{CC2}		17	22.3	
ISO7741-Q1							
Supply current - Disable	EN1 = EN2 = 0 V; V_I = V_{CCI} (ISO7741-Q1); V_I = 0 V (ISO7741-Q1with F suffix)		I_{CC1}		1	2.1	mA
			I_{CC2}		0.8	1.5	
	EN1 = EN2 = 0 V; V_I = 0 V (ISO7741-Q1); V_I = V_{CCI} (ISO7741-Q1 with F suffix)		I_{CC1}		4.3	6.3	
			I_{CC2}		1.9	2.7	
Supply current - DC signal	EN1 = EN2 = V_{CCI}; V_I = V_{CCI} (1)(ISO7741-Q1); V_I = 0 V (ISO7741-Q1 with F suffix)		I_{CC1}		1.5	2.8	
			I_{CC2}		2	3.7	
	EN1 = EN2 = V_{CCI}; V_I = 0 V (ISO7741-Q1); V_I = V_{CCI} (ISO7741-Q1 with F suffix)		I_{CC1}		4.8	6.8	
			I_{CC2}		3.2	5.1	
Supply current - AC signal	All channels switching with square wave clock input; C_L = 15 pF	1 Mbps	I_{CC1}		3.2	4.7	
			I_{CC2}		2.7	4.5	
		10 Mbps	I_{CC1}		3.5	5.2	
			I_{CC2}		3.7	5.8	
		100 Mbps	I_{CC1}		6.8	10	
			I_{CC2}		13.7	18.6	
ISO7742-Q1							
Supply current - Disable	EN1 = EN2 = 0 V; V_I = V_{CCI} (1)(ISO7742-Q1); V_I = 0 V (ISO7742-Q1 with F suffix)		I_{CC1} , I_{CC2}		0.9	2	mA
	EN1 = EN2 = 0 V; V_I = 0 V (1)(ISO7742-Q1); V_I = V_{CCI} (ISO7742-Q1 with F suffix)		I_{CC1} , I_{CC2}		3	4.6	
Supply current - DC signal	EN1 = EN2 = V_{CCI}; V_I = V_{CCI} (1)(ISO7742-Q1); V_I = 0 V (ISO7742-Q1 with F suffix)		I_{CC1} , I_{CC2}		1.7	3.4	
	EN1 = EN2 = V_{CCI}; V_I = 0 V (ISO7742-Q1); V_I = V_{CCI} (ISO7742-Q1 with F suffix)		I_{CC1} , I_{CC2}		4	5.9	
Supply current - AC signal	All channels switching with square wave clock input; C_L = 15 pF	1 Mbps	I_{CC1}, I_{CC2}		2.9	4.8	
		10 Mbps	I_{CC1}, I_{CC2}		3.6	5.6	
		100 Mbps	I_{CC1}, I_{CC2}		10.3	14.4	

(1) V_{CCI} = Input-side V_{CC}

Copyright © 2025 Texas Instruments Incorporated

5.13 Electrical Characteristics—2.5-V Supply

V_{CC1} = V_{CC2} = 2.5 V ±10% (over recommended operating conditions unless otherwise noted)

PARAMETER		TEST CONDITIONS	MIN	TYP	MAX	UNIT
V_{OH}	High-level output voltage	I_{OH} = -1mA; See Figure 6-1	V_{CCO} - 0.2(1)	2.45		V
V_{OL}	Low-level output voltage	I_{OL} = 1mA; See Figure 6-1		0.05	0.2	V
$V_{IT+(IN)}$	Rising input switching threshold			0.6 x V_{CCI}	0.7 x V_{CCI}	V
$V_{IT-(IN)}$	Falling input switching threshold		0.3 x V_{CCI}	0.4 x V_{CCI}		V
$V_{I(HYS)}$	Input threshold voltage hysteresis		0.1 x V_{CCI}	0.2 x V_{CCI}		V
I_{IH}	High-level input current	V_{IH} = V_{CCI} (1) at INx			10	µA
I_{IL}	Low-level input current	V_{IL} = 0 V at INx	-10			µA
I_{IH}	High-level input current	V_{IH} = V_{CCI} (1) at ENx			30	µA
I_{IL}	Low-level input current	V_{IL} = 0 V at ENx	-30			µA
CMTI	Common mode transient immunity	V_I = V_{CCI} or 0 V, V_{CM} = 1200 V; See Figure 6-4	85	100		kV/µs

(1) V_{CCI} = Input-side V_{CC}; V_{CCO} = Output-side V_{CC}

Copyright © 2025 Texas Instruments Incorporated

5.14 Supply Current Characteristics—2.5-V Supply

V_{CC1} = V_{CC2} = 2.5 V ±10% (over recommended operating conditions unless otherwise noted)

PARAMETER	TEST CONDITIONS		SUPPLY CURRENT	MIN	TYP	MAX	UNIT
ISO7740-Q1							
Supply current - Disable	EN2 = 0 V; V_I = V_{CC1} (1)(ISO7740-Q1); V_I = 0 V (ISO7740-Q1 with F suffix)		I_{CC1}		1.2	2.2	mA
			I_{CC2}		0.3	0.7	
	EN2 = 0 V; V_I = 0 V (1)(ISO7740-Q1); V_I = V_{CC1} (ISO7740-Q1 with F suffix)		I_{CC1}		5.5	7.8	
			I_{CC2}		0.3	0.7	
Supply current - DC signal	EN2 = V_{CC2}; V_I = V_{CC1} (1)(ISO7740-Q1); V_I = 0 V (ISO7740-Q1 with F suffix)		I_{CC1}		1.2	2.2	
			I_{CC2}		1.9	3.6	
	EN2 = V_{CC2}; V_I = 0 V (ISO7740-Q1); V_I = V_{CC1} (ISO7740-Q1 with F suffix)		I_{CC1}		5.4	7.8	
			I_{CC2}		2.2	3.9	
Supply current - AC signal	All channels switching with square wave clock input; C_L = 15 pF	1 Mbps	I_{CC1}		3.3	4.7	
			I_{CC2}		2.2	3.9	
		10 Mbps	I_{CC1}		3.4	4.8	
			I_{CC2}		3.2	5.1	
		100 Mbps	I_{CC1}		3.2	5.5	
			I_{CC2}		13	17.7	
ISO7741-Q1							
Supply current - Disable	EN1 = EN2 = 0 V; V_I = V_{CCI} (ISO7741-Q1); V_I = 0 V (ISO7741-Q1 with F suffix)		I_{CC1}		1	2.2	mA
			I_{CC2}		0.8	2.8	
	EN1 = EN2 = 0 V; V_I = 0 V (ISO7741-Q1); V_I = V_{CCI} (ISO7741-Q1 with F suffix)		I_{CC1}		4.3	6.3	
			I_{CC2}		1.8	2.8	
Supply current - DC signal	EN1 = EN2 = V_{CCI}; V_I = V_{CCI} (1)(ISO7741-Q1); V_I = 0 V (ISO7741-Q1 with F suffix)		I_{CC1}		1.4	2.9	
			I_{CC2}		2	3.9	
	EN1 = EN2 = V_{CCI}; V_I = 0 V (ISO7741-Q1); V_I = V_{CCI} (ISO7741-Q1 with F suffix)		I_{CC1}		4.7	6.8	
			I_{CC2}		3.2	5.21	
Supply current - AC signal	All channels switching with square wave clock input; C_L = 15 pF	1 Mbps	I_{CC1}		3.1	4.8	
			I_{CC2}		2.7	4.7	
		10 Mbps	I_{CC1}		3.4	5.2	
			I_{CC2}		3.5	5.64	
		100 Mbps	I_{CC1}		5.6	8.7	
			I_{CC2}		10.8	15	
ISO7742-Q1							
Supply current - Disable	EN1 = EN2 = 0 V; V_I = V_{CCI} (1)(ISO7742-Q1); V_I = 0 V (ISO7742-Q1 with F suffix)		I_{CC1} , I_{CC2}		0.9	1.9	mA
	EN1 = EN2 = 0 V; V_I = 0 V (1)(ISO7742-Q1); V_I = V_{CCI} (ISO7742-Q1 with F suffix)		I_{CC1} , I_{CC2}		3	4.6	
Supply current - DC signal	EN1 = EN2 = V_{CCI}; V_I = V_{CCI} (1)(ISO7742-Q1); V_I = 0 V (ISO7742-Q1 with F suffix)		I_{CC1} , I_{CC2}		1.7	3.4	
	EN1 = EN2 = V_{CCI}; V_I = 0 V (ISO7742-Q1); V_I = V_{CCI} (ISO7742-Q1 with F suffix)		I_{CC1} , I_{CC2}		4	5.9	
Supply current - AC signal	All channels switching with square wave clock input; C_L = 15 pF	1 Mbps	I_{CC1}, I_{CC2}		2.9	4.7	
		10 Mbps	I_{CC1}, I_{CC2}		3.4	5.4	
		100 Mbps	I_{CC1}, I_{CC2}		8.3	11.9	

(1) V_{CCI} = Input-side V_{CC}

Copyright © 2025 Texas Instruments Incorporated

5.15 Switching Characteristics—5-V Supply

V_{CC1} = V_{CC2} = 5 V ±10% (over recommended operating conditions unless otherwise noted)

PARAMETER		TEST CONDITIONS	MIN	TYP	MAX	UNIT
t_{PLH}, t_{PHL}	Propagation delay time	See Figure 6-1	6	10.7	17	ns
PWD	Pulse width distortion(1) $\lvert t_{PHL} - t_{PLH} \rvert$			0	5.9	ns
$t_{sk(o)}$	Channel-to-channel output skew time(2)	Same-direction channels			4	ns
$t_{sk(pp)}$	Part-to-part skew time(3)				4.4	ns
t_r	Output signal rise time	See Figure 6-1		2.4	3.9	ns
t_f	Output signal fall time			2.4	3.9	ns
t_{PHZ}	Disable propagation delay, high-to-high impedance output	See Figure 6-2		9	22	ns
t_{PLZ}	Disable propagation delay, low-to-high impedance output			9	20	ns
t_{PZH}	Enable propagation delay, high impedance-to-high output for ISO774x			7	20	ns
	Enable propagation delay, high impedance-to-high output for ISO774x with F suffix			3	8.5	µs
t_{PZL}	Enable propagation delay, high impedance-to-low output for ISO774x			3	8.5	µs
	Enable propagation delay, high impedance-to-low output for ISO774x with F suffix			7	20	ns
t_{DO}	Default output delay time from input power loss	Measured from the time V_{CC} goes below 1.7V. See Figure 6-4		0.1	0.3	µs
t_{ie}	Time interval error	2^{16} – 1 PRBS data at 100 Mbps		0.8		ns

(1) Also known as pulse skew.
(2) $t_{sk(o)}$ is the skew between outputs of a single device with all driving inputs connected together and the outputs switching in the same direction while driving identical loads.
(3) $t_{sk(pp)}$ is the magnitude of the difference in propagation delay times between any terminals of different devices switching in the same direction while operating at identical supply voltages, temperature, input signals and loads.

Copyright © 2025 Texas Instruments Incorporated

5.16 Switching Characteristics—3.3-V Supply

V_{CC1} = V_{CC2} = 3.3 V ±10% (over recommended operating conditions unless otherwise noted)

PARAMETER		TEST CONDITIONS	MIN	TYP	MAX	UNIT
t_{PLH}, t_{PHL}	Propagation delay time	See Figure 6-1	6	11	18.5	ns
PWD	Pulse width distortion(1) $\lvert t_{PHL} - t_{PLH} \rvert$			0.1	5.9	ns
$t_{sk(o)}$	Channel-to-channel output skew time(2)	Same-direction channels			4.4	ns
$t_{sk(pp)}$	Part-to-part skew time(3)				5	ns
t_r	Output signal rise time	See Figure 6-1		1.3	3	ns
t_f	Output signal fall time			1.3	3	ns
t_{PHZ}	Disable propagation delay, high-to-high impedance output	See Figure 6-2		17	31	ns
t_{PLZ}	Disable propagation delay, low-to-high impedance output			17	30	ns
t_{PZH}	Enable propagation delay, high impedance-to-high output for ISO774x			17	30	ns
	Enable propagation delay, high impedance-to-high output for ISO774x with F suffix			3.2	8.5	µs
t_{PZL}	Enable propagation delay, high impedance-to-low output for ISO774x			3.2	8.5	µs
	Enable propagation delay, high impedance-to-low output for ISO774x with F suffix			17	30	ns
t_{DO}	Default output delay time from input power loss	Measured from the time V_{CC} goes below 1.7V. See Figure 6-4		0.1	0.3	µs
t_{ie}	Time interval error	2^{16} – 1 PRBS data at 100 Mbps		0.9		ns

(1) Also known as pulse skew.
(2) $t_{sk(o)}$ is the skew between outputs of a single device with all driving inputs connected together and the outputs switching in the same direction while driving identical loads.
(3) $t_{sk(pp)}$ is the magnitude of the difference in propagation delay times between any terminals of different devices switching in the same direction while operating at identical supply voltages, temperature, input signals and loads.

Copyright © 2025 Texas Instruments Incorporated

5.17 Switching Characteristics—2.5-V Supply

V_{CC1} = V_{CC2} = 2.5 V ±10% (over recommended operating conditions unless otherwise noted)

PARAMETER		TEST CONDITIONS	MIN	TYP	MAX	UNIT
t_{PLH}, t_{PHL}	Propagation delay time	See Figure 6-1	7.5	12	21	ns
PWD	Pulse width distortion(1) $\lvert t_{PHL} - t_{PLH} \rvert$			0.2	5.9	ns
$t_{sk(o)}$	Channel-to-channel output skew time(2)	Same-direction channels			4.4	ns
$t_{sk(pp)}$	Part-to-part skew time(3)				5.3	ns
t_r	Output signal rise time	See Figure 6-1		1	3.5	ns
t_f	Output signal fall time			1	3.5	ns
t_{PHZ}	Disable propagation delay, high-to-high impedance output	See Figure 6-2		22	41	ns
t_{PLZ}	Disable propagation delay, low-to-high impedance output			22	40	ns
t_{PZH}	Enable propagation delay, high impedance-to-high output for ISO774x			18	40	ns
	Enable propagation delay, high impedance-to-high output for ISO774x with F suffix			3.3	8.5	µs
t_{PZL}	Enable propagation delay, high impedance-to-low output for ISO774x			3.3	8.5	µs
	Enable propagation delay, high impedance-to-low output for ISO774x with F suffix			18	40	ns
t_{DO}	Default output delay time from input power loss	Measured from the time V_{CC} goes below 1.7V. See Figure 6-4		0.1	0.3	µs
t_{ie}	Time interval error	2^{16} – 1 PRBS data at 100 Mbps		0.7		ns

(1) Also known as pulse skew.
(2) $t_{sk(o)}$ is the skew between outputs of a single device with all driving inputs connected together and the outputs switching in the same direction while driving identical loads.
(3) $t_{sk(pp)}$ is the magnitude of the difference in propagation delay times between any terminals of different devices switching in the same direction while operating at identical supply voltages, temperature, input signals and loads.

Copyright © 2025 Texas Instruments Incorporated

5.18 Insulation Characteristics Curves

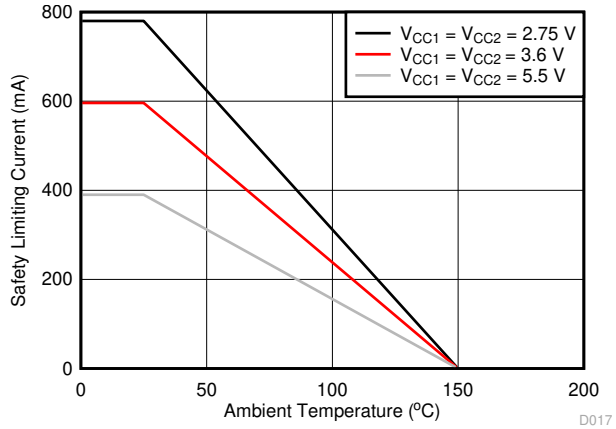

Figure 5-1. Thermal Derating Curve for Safety Limiting Current for DWW-16 Package

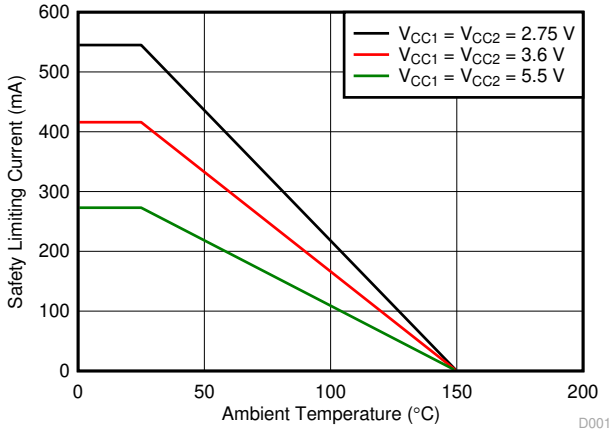

Figure 5-2. Thermal Derating Curve for Safety Limiting Current for DW-16 Package

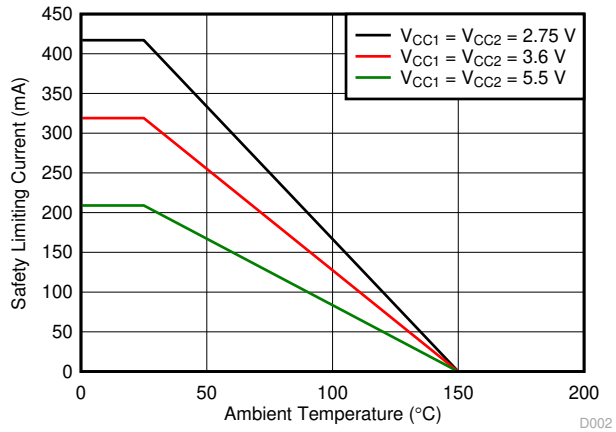

Figure 5-3. Thermal Derating Curve for Safety Limiting Current for DBQ-16 Package

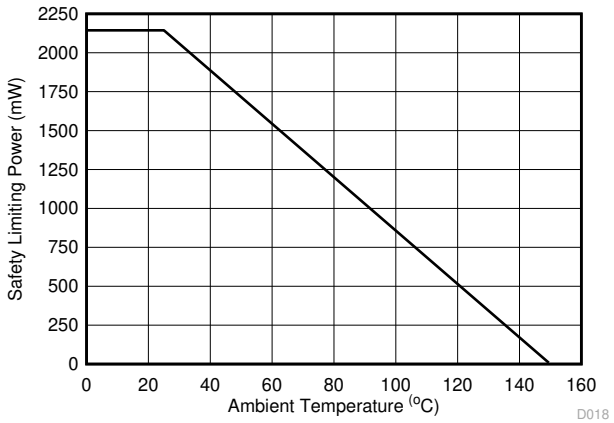

Figure 5-4. Thermal Derating Curve for Safety Limiting Power for DWW-16 Package

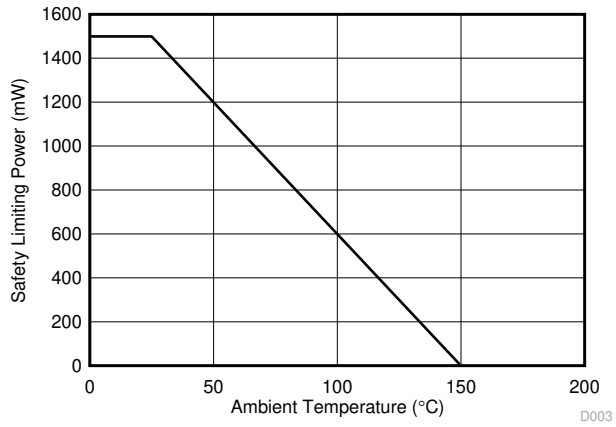

Figure 5-5. Thermal Derating Curve for Safety Limiting Power for DW-16 Package

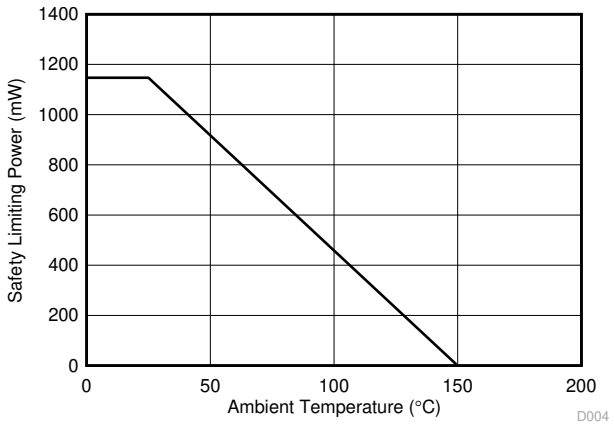

Figure 5-6. Thermal Derating Curve for Safety Limiting Power for DBQ-16 Package

Copyright © 2025 Texas Instruments Incorporated

5.19 Typical Characteristics

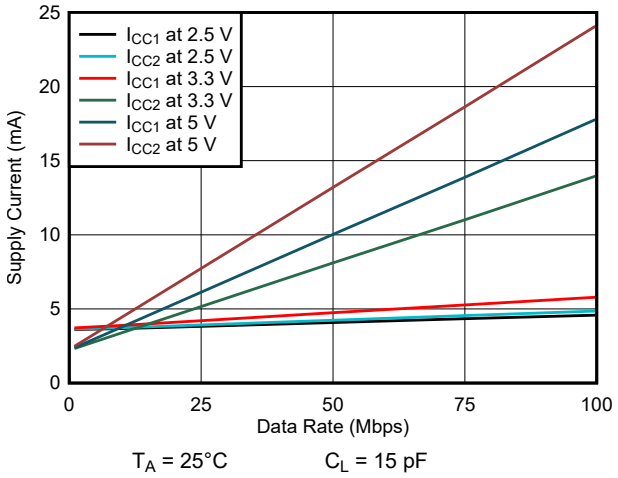

T_A = 25°C C_L = 15 pF

Figure 5-7. ISO7740-Q1 Supply Current vs Data Rate (With 15-pF Load)

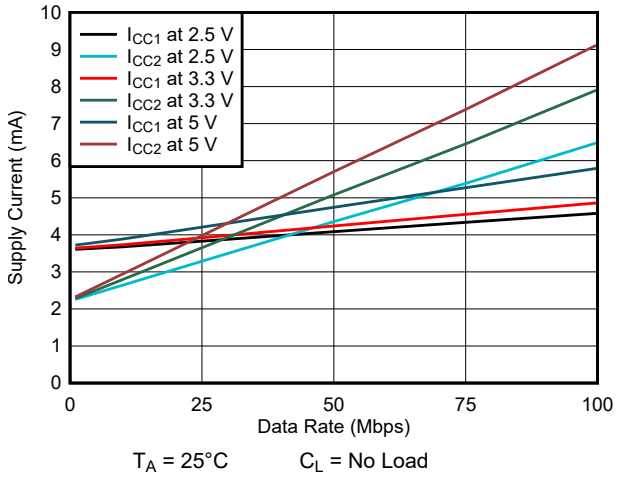

T_A = 25°C C_L = No Load

Figure 5-8. ISO7740-Q1 Supply Current vs Data Rate (With No Load)

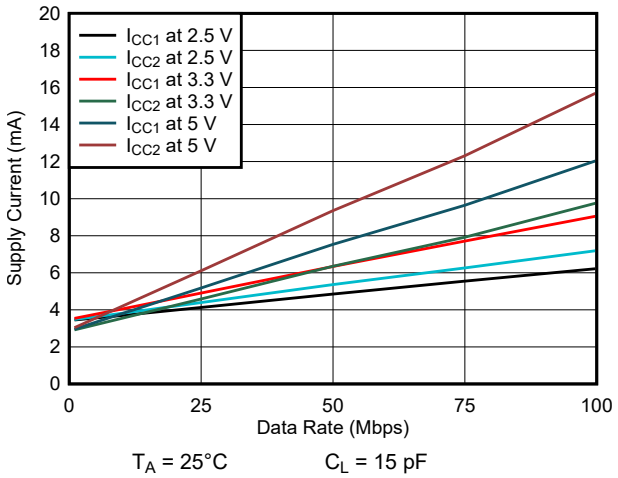

T_A = 25°C C_L = 15 pF

Figure 5-9. ISO7741-Q1 Supply Current vs Data Rate (With 15-pF Load)

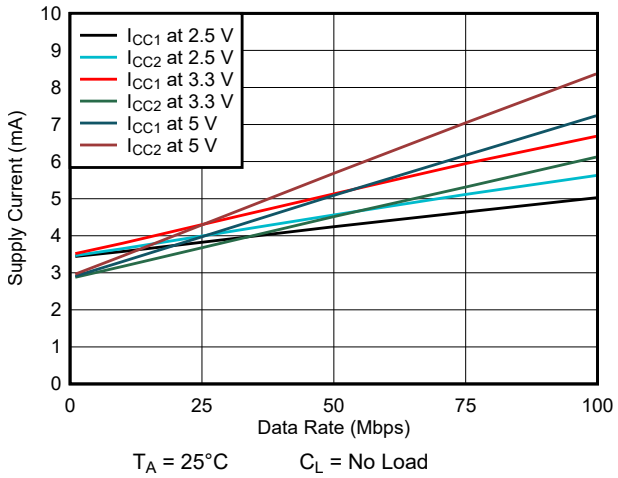

T_A = 25°C C_L = No Load

Figure 5-10. ISO7741-Q1 Supply Current vs Data Rate (With No Load)

Copyright © 2025 Texas Instruments Incorporated

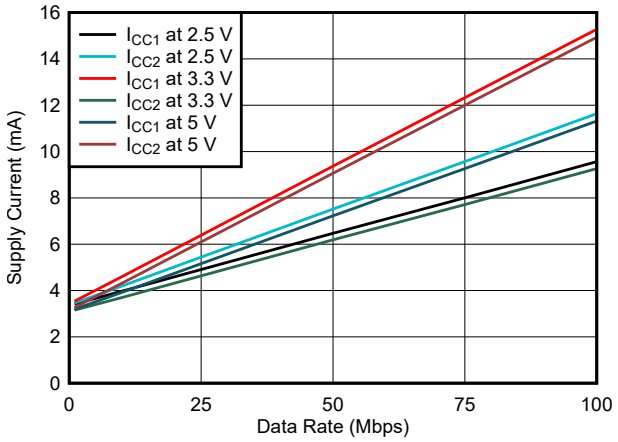

Figure 5-11. ISO7742-Q1 Supply Current vs Data Rate (With 15-pF Load)

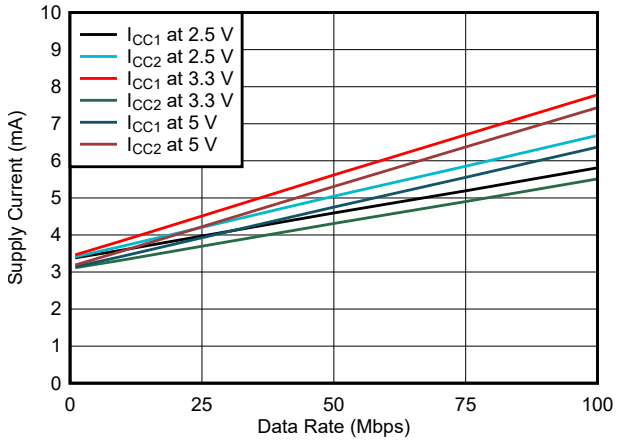

Figure 5-12. ISO7742-Q1 Supply Current vs Data Rate (With No Load)

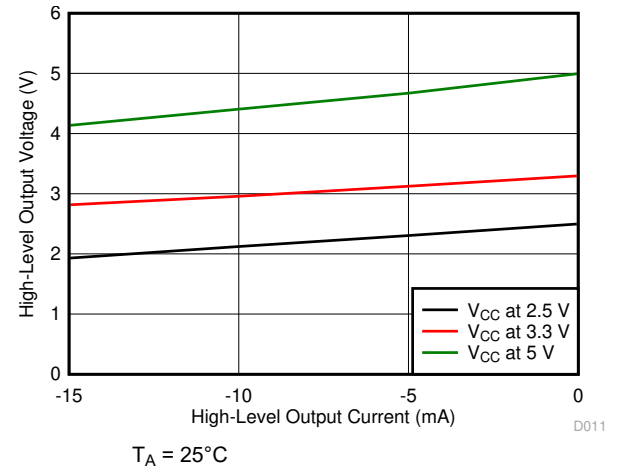

Figure 5-13. High-Level Output Voltage vs High-level Output Current

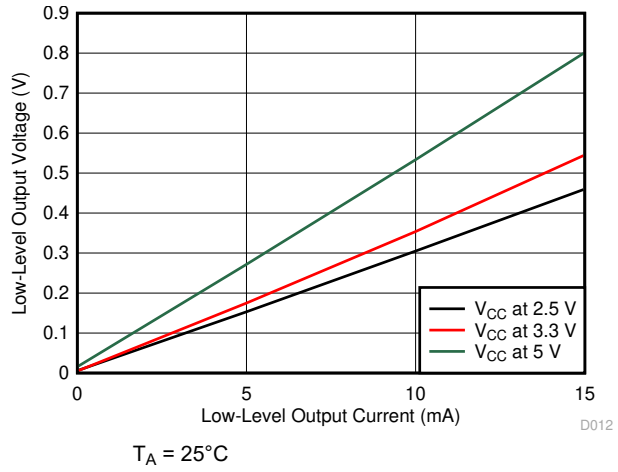

Figure 5-14. Low-Level Output Voltage vs Low-Level Output Current

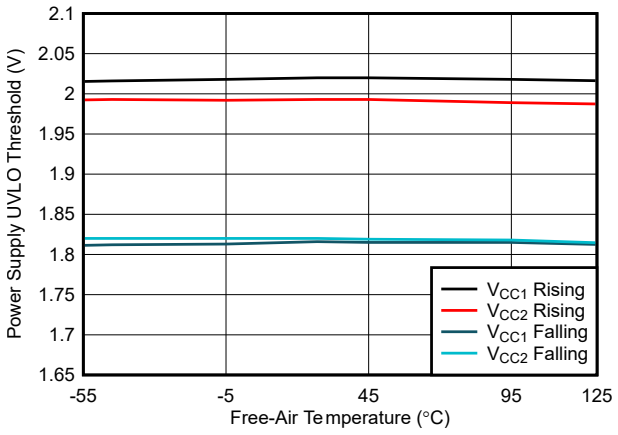

Figure 5-15. Power Supply Undervoltage Threshold vs Free-Air Temperature

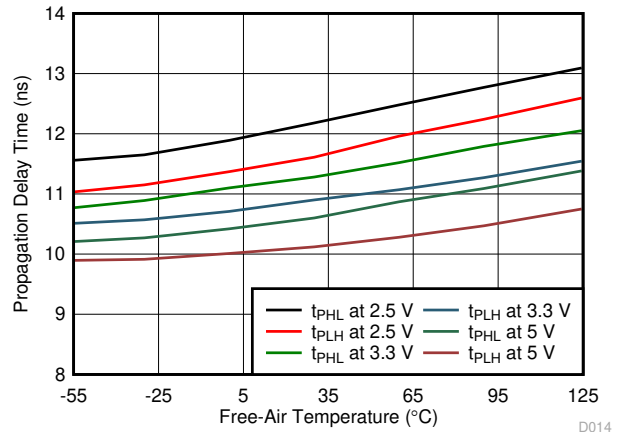

Figure 5-16. Propagation Delay Time vs Free-Air Temperature

Copyright © 2025 Texas Instruments Incorporated

6 Parameter Measurement Information

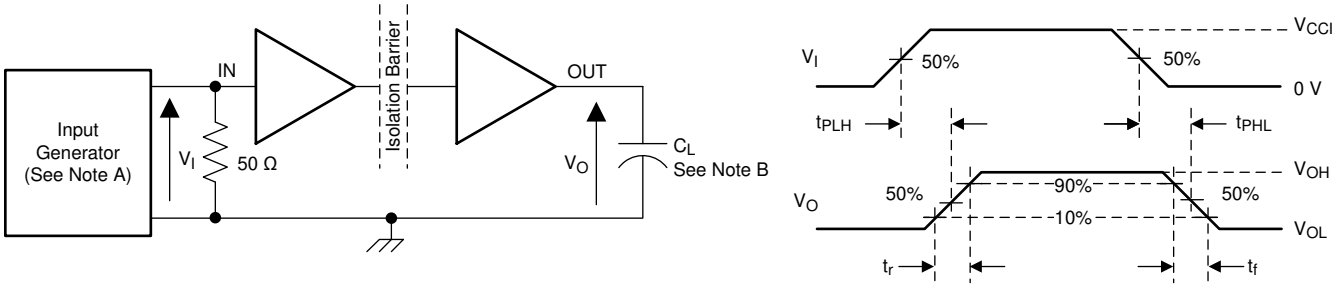

Copyright © 2016, Texas Instruments Incorporated

A. The input pulse is supplied by a generator having the following characteristics: PRR ≤ 50kHz, 50% duty cycle, t_r ≤ 3ns, t_f ≤ 3ns, Z_O = 50Ω. At the input, 50Ω resistor is required to terminate Input Generator signal. The 50Ω resistor is not needed in actual application.

B. C_L = 15pF and includes instrumentation and fixture capacitance within ±20%.

Figure 6-1. Switching Characteristics Test Circuit and Voltage Waveforms

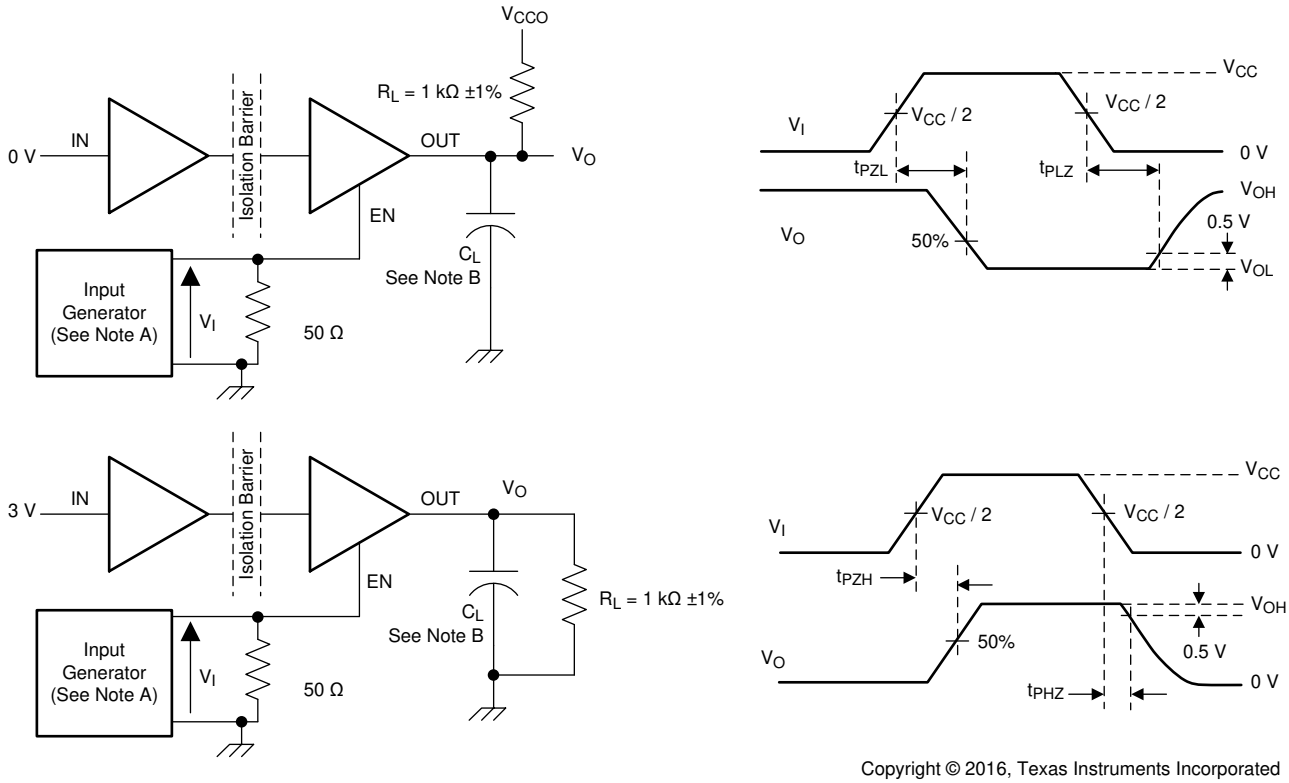

Copyright © 2016, Texas Instruments Incorporated

A. The input pulse is supplied by a generator having the following characteristics: PRR ≤ 10kHz, 50% duty cycle, t_r ≤ 3ns, t_f ≤ 3ns, Z_O = 50Ω.

B. C_L = 15pF and includes instrumentation and fixture capacitance within ±20%.

Figure 6-2. Enable/Disable Propagation Delay Time Test Circuit and Waveform

Copyright © 2025 Texas Instruments Incorporated

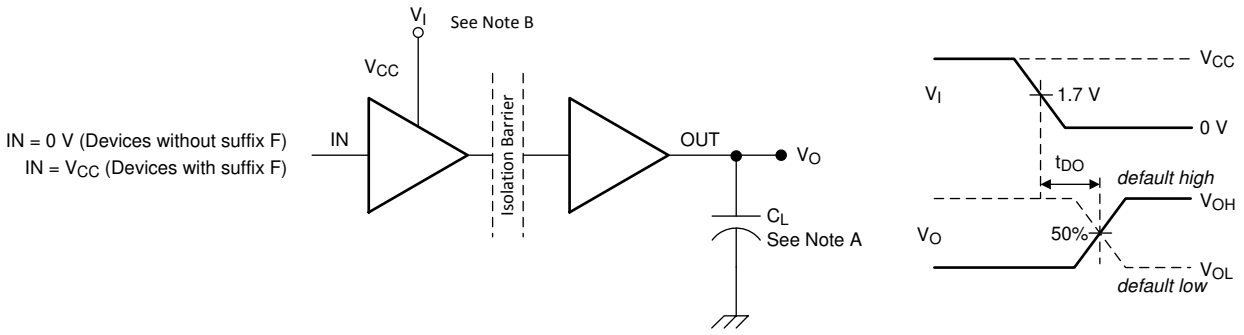

A. C_L = 15pF and includes instrumentation and fixture capacitance within ±20%.
B. Power Supply Ramp Rate = 10mV/ns

Figure 6-3. Default Output Delay Time Test Circuit and Voltage Waveforms

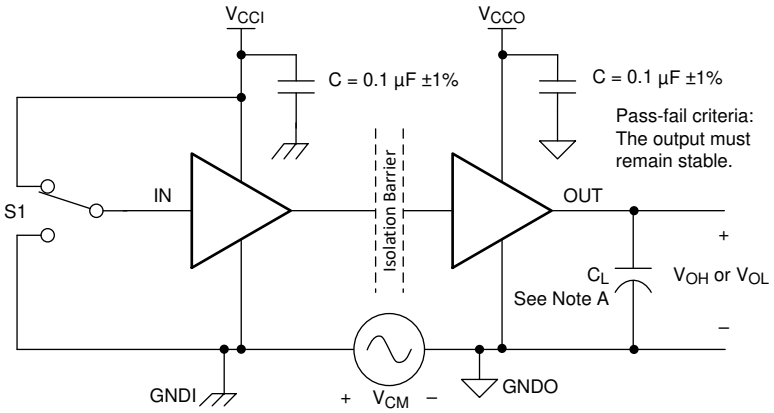

A. C_L = 15pF and includes instrumentation and fixture capacitance within ±20%.

Figure 6-4. Common-Mode Transient Immunity Test Circuit

Copyright © 2025 Texas Instruments Incorporated

7 Detailed Description

7.1 Overview

The ISO774x-Q1 family of devices an ON-OFF keying (OOK) modulation scheme to transmit the digital data across a silicon dioxide based isolation barrier. The transmitter sends a high frequency carrier across the barrier to represent one digital state and sends no signal to represent the other digital state. The receiver demodulates the signal after advanced signal conditioning and produces the output through a buffer stage. If the ENx pin is low then the output goes to high impedance. The ISO774x-Q1 devices also incorporate advanced circuit techniques to maximize the CMTI performance and minimize the radiated emissions due to the high frequency carrier and IO buffer switching. The conceptual block diagram of a digital capacitive isolator, Figure 7-1, shows a functional block diagram of a typical channel.

7.2 Functional Block Diagram

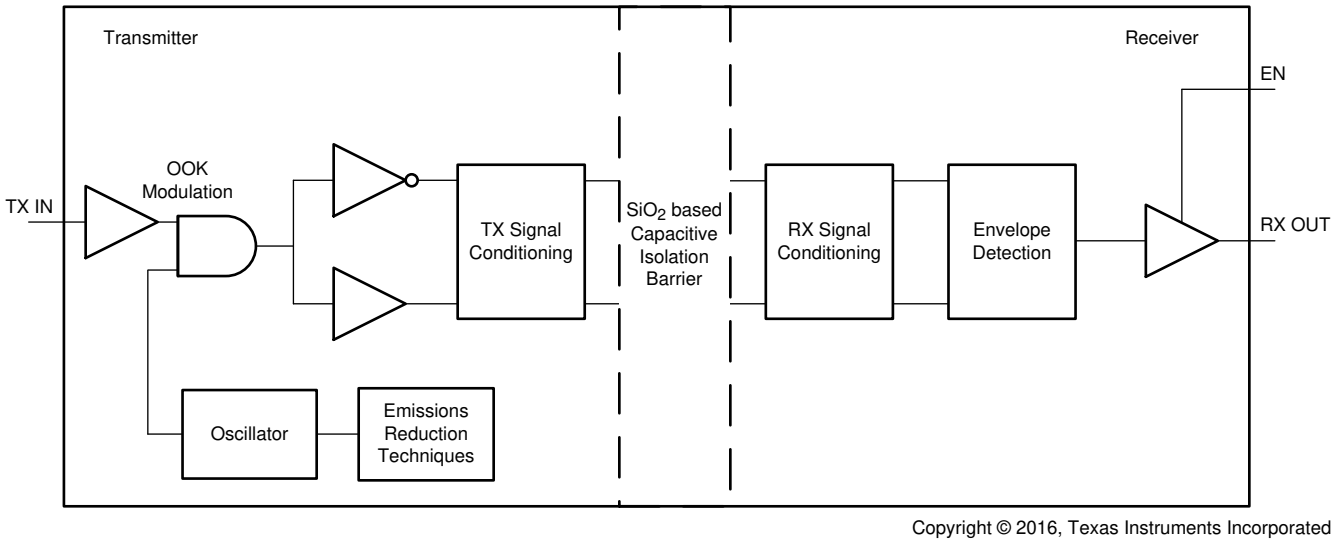

Copyright © 2016, Texas Instruments Incorporated

Figure 7-1. Conceptual Block Diagram of a Digital Capacitive Isolator

Figure 7-2 shows a conceptual detail of how the ON-OFF keying scheme works.

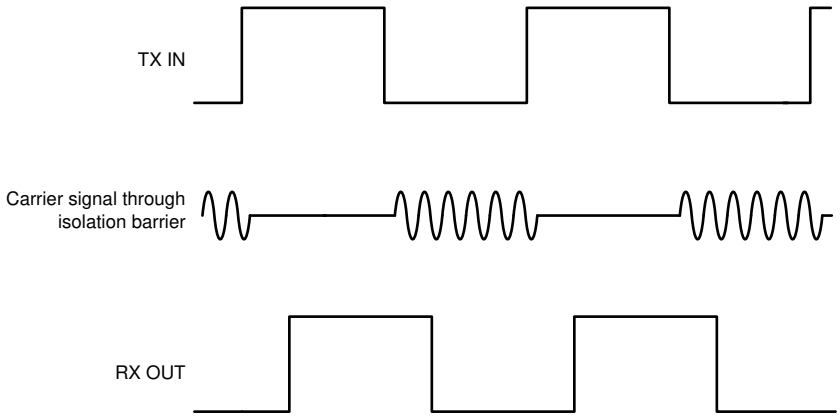

Figure 7-2. On-Off Keying (OOK) Based Modulation Scheme

Copyright © 2025 Texas Instruments Incorporated

7.3 Feature Description

Table 7-1 provides an overview of the device features.

Table 7-1. Device Features

PART NUMBER	CHANNEL DIRECTION	MAXIMUM DATA RATE	DEFAULT OUTPUT	PACKAGE	RATED ISOLATION(1)
ISO7740-Q1	4 Forward, 0 Reverse	100 Mbps	High	DW-16	5000 V_{RMS} / 8000 V_{PK}
				DBQ-16	3000 V_{RMS} / 4242 V_{PK}
ISO7740-Q1 with F suffix	4 Forward, 0 Reverse	100 Mbps	Low	DW-16	5000 V_{RMS} / 8000 V_{PK}
				DBQ-16	3000 V_{RMS} / 4242 V_{PK}
ISO7741-Q1	3 Forward, 1 Reverse	100 Mbps	High	DWW-16	5700 V_{RMS} / 8000 V_{PK}
				DW-16	5000 V_{RMS} / 8000 V_{PK}
				DBQ-16	3000 V_{RMS} / 4242 V_{PK}
ISO7741-Q1 with F suffix	3 Forward, 1 Reverse	100 Mbps	Low	DWW-16	5700 V_{RMS} / 8000 V_{PK}
				DW-16	5000 V_{RMS} / 8000 V_{PK}
				DBQ-16	3000 V_{RMS} / 4242 V_{PK}
ISO7742-Q1	2 Forward, 2 Reverse	100 Mbps	High	DW-16	5000 V_{RMS} / 8000 V_{PK}
				DBQ-16	3000 V_{RMS} / 4242 V_{PK}
ISO7742-Q1 with F suffix	2 Forward, 2 Reverse	100 Mbps	Low	DW-16	5000 V_{RMS} / 8000 V_{PK}
				DBQ-16	3000 V_{RMS} / 4242 V_{PK}

(1) See Section 5.7 for detailed isolation ratings.

7.3.1 Electromagnetic Compatibility (EMC) Considerations

Many applications in harsh industrial environment are sensitive to disturbances such as electrostatic discharge (ESD), electrical fast transient (EFT), surge and electromagnetic emissions. These electromagnetic disturbances are regulated by international standards such as IEC 61000-4-x and CISPR 22. Although system-level performance and reliability depends, to a large extent, on the application board design and layout, the ISO774x-Q1 family of devices incorporates many chip-level design improvements for overall system robustness. Some of these improvements include:

- Robust ESD protection cells for input and output signal pins and inter-chip bond pads.
- Low-resistance connectivity of ESD cells to supply and ground pins.
- Enhanced performance of high voltage isolation capacitor for better tolerance of ESD, EFT and surge events.
- Bigger on-chip decoupling capacitors to bypass undesirable high energy signals through a low impedance path.
- PMOS and NMOS devices isolated from each other by using guard rings to avoid triggering of parasitic SCRs.
- Reduced common mode currents across the isolation barrier by providing purely differential internal operation.

Copyright © 2025 Texas Instruments Incorporated

7.4 Device Functional Modes

Table 7-2 lists the functional modes for the ISO774x-Q1 devices.

Table 7-2. Function Table

V_{CCI} (1)	V_{CCO}	INPUT (INx)(3)	OUTPUT ENABLE (ENx)	OUTPUT (OUTx)	COMMENTS
PU	PU	H	H or open	H	Normal Operation: A channel output assumes the logic state of the input.
		L	H or open	L	
		Open	H or open	Default	Default mode: When INx is open, the corresponding channel output goes to the default logic state. Default is *High* for ISO774x-Q1 and *Low* for ISO774x-Q1 with F suffix.
X	PU	X	L	Z	A low value of output enable causes the outputs to be high-impedance.
PD	PU	X	H or open	Default	Default mode: When V_{CCI} is unpowered, a channel output assumes the logic state based on the selected default option. Default is *High* for ISO774x-Q1 and *Low* for ISO774x-Q1 with F suffix. When V_{CCI} transitions from unpowered to powered-up, a channel output assumes the logic state of the input. When V_{CCI} transitions from powered-up to unpowered, channel output assumes the selected default state.
X	PD	X	X	Undetermined	When V_{CCO} is unpowered, a channel output is undetermined(2). When V_{CCO} transitions from unpowered to powered-up, a channel output assumes the logic state of the input.

(1) V_{CCI} = Input-side V_{CC}; V_{CCO} = Output-side V_{CC}; PU = Powered up (V_{CC} ≥ 2.25 V); PD = Powered down (V_{CC} ≤ 1.7 V); X = Irrelevant; H = High level; L = Low level ; Z = High Impedance
(2) The outputs are in undetermined state when 1.7 V < V_{CCI}, V_{CCO} < 2.25 V.
(3) A strongly driven input signal can weakly power the floating V_{CC} through an internal protection diode and cause undetermined output.

Copyright © 2025 Texas Instruments Incorporated

7.4.1 Device I/O Schematics

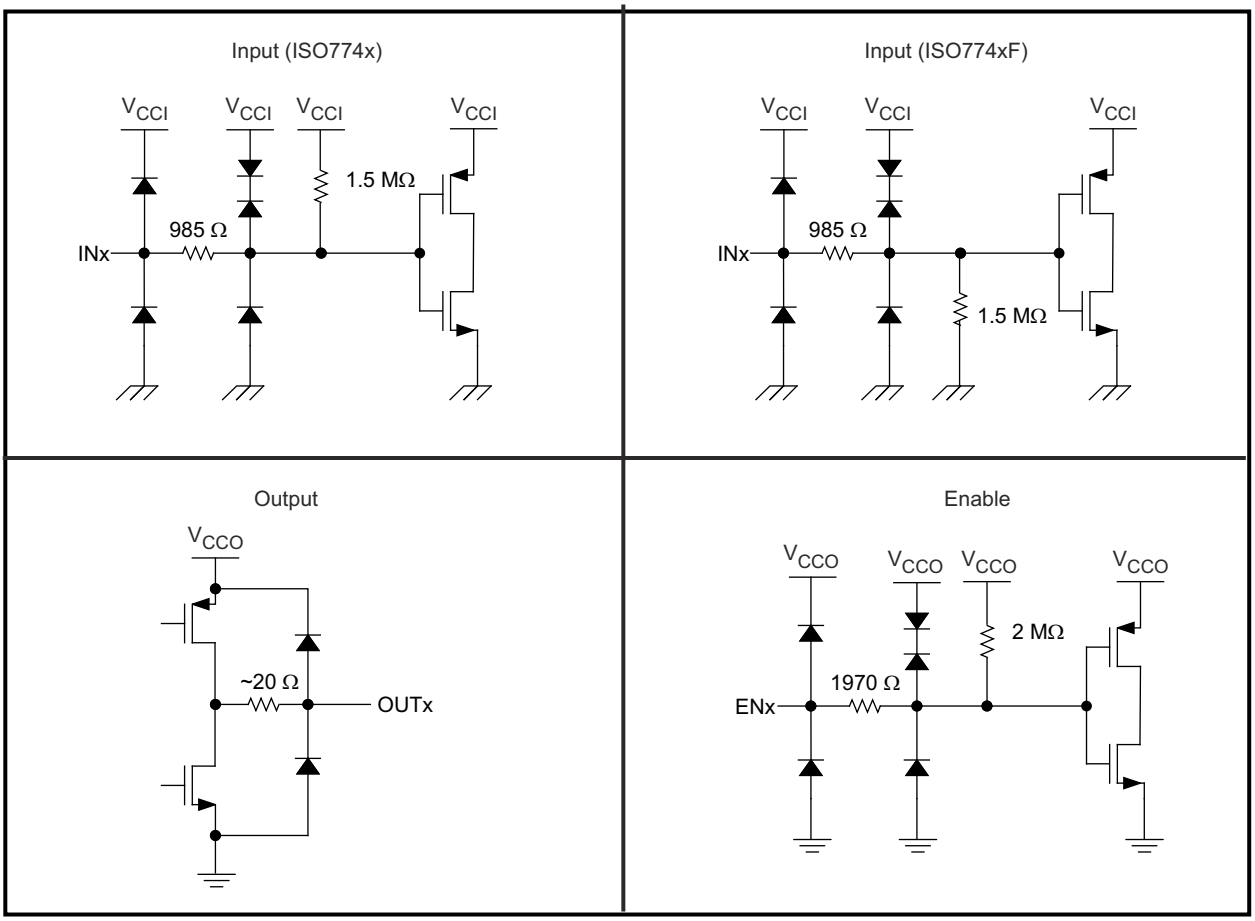

Copyright © 2016, Texas Instruments Incorporated

Figure 7-3. Device I/O Schematics

8 Application and Implementation

Note

Information in the following applications sections is not part of the TI component specification, and TI does not warrant its accuracy or completeness. TI's customers are responsible for determining suitability of components for their purposes. Customers should validate and test their design implementation to confirm system functionality.

8.1 Application Information

The ISO774x-Q1 devices are high-performance, quad-channel digital isolators. These devices come with enable pins on each side which can be used to put the respective outputs in high impedance for multi master driving applications and reduce power consumption. The ISO774x-Q1 devices use single-ended CMOS-logic switching technology. The voltage range is from 2.25 V to 5.5 V for both supplies, V_{CC1} and V_{CC2}. When designing with digital isolators, keep in mind that because of the single-ended design structure, digital isolators do not conform to any specific interface standard and are only intended for isolating single-ended CMOS or TTL digital signal lines. The isolator is typically placed between the data controller (that is, µC or UART), and a data converter or a line transceiver, regardless of the interface type or standard.

8.2 Typical Application

Figure 8-1 shows the typical isolated CAN interface implementation.

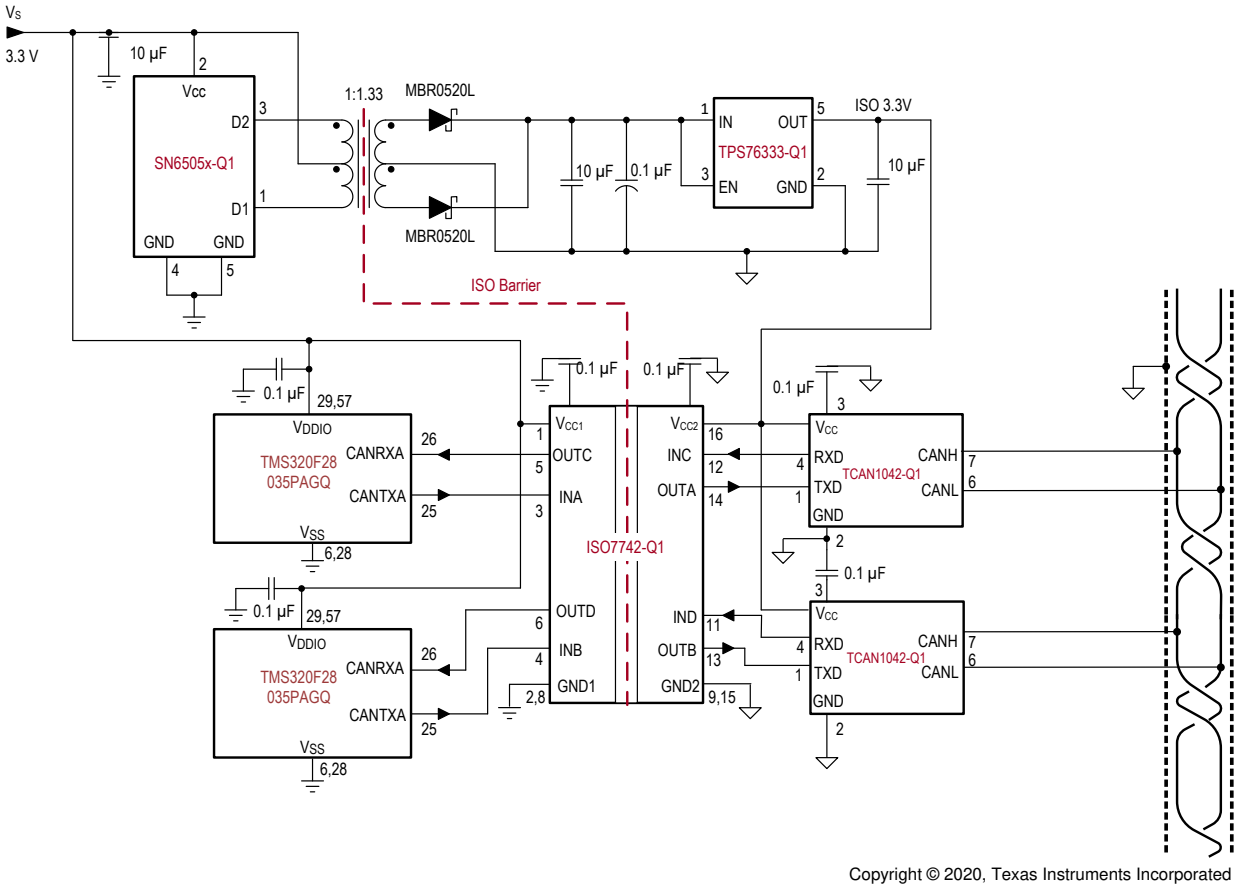

Figure 8-1. Typical Isolated CAN Application Circuit

Copyright © 2025 Texas Instruments Incorporated

8.2.1 Design Requirements

To design with these devices, use the parameters listed in Table 8-1.

Table 8-1. Design Parameters

PARAMETER	VALUE
Supply voltage, V_{CC1} and V_{CC2}	2.25 to 5.5 V
Decoupling capacitor between V_{CC1} and GND1	0.1 µF
Decoupling capacitor from V_{CC2} and GND2	0.1 µF

8.2.2 Detailed Design Procedure

Unlike optocouplers, which require external components to improve performance, provide bias, or limit current, the ISO774x-Q1 family of devices only require two external bypass capacitors to operate.

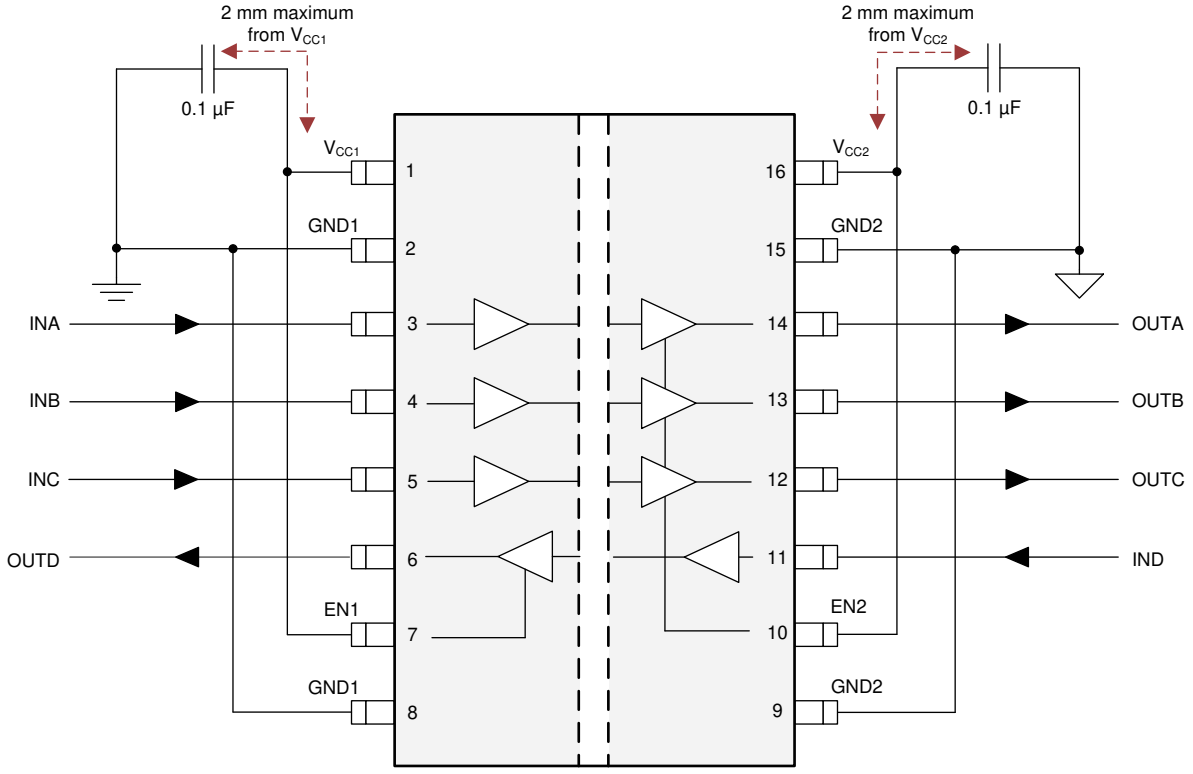

Figure 8-2. Typical ISO774x-Q1 Circuit Hook-up

The DWW package provides wider creepage and clearance without the need for two isolators in series or an extra isolated power supply, saving design cost and board space. For more details, please refer to the technical document *How to Meet the Higher Isolation Creepage & Clearance Needs in Automotive Applications*.

Copyright © 2025 Texas Instruments Incorporated

8.2.3 Application Curve

The following typical eye diagrams of the ISO774x-Q1 family of devices indicates low jitter and wide open eye at the maximum data rate of 100 Mbps.

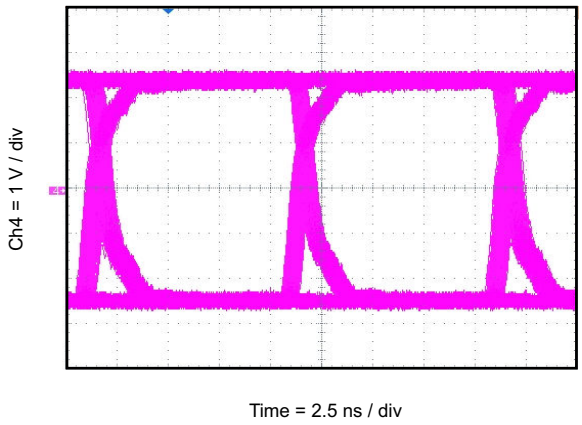

Figure 8-3. Eye Diagram at 100 Mbps PRBS 2^{16} – 1, 5 V and 25°C

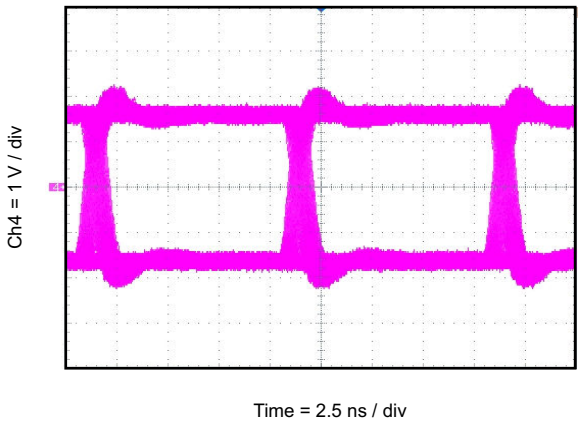

Figure 8-4. Eye Diagram at 100 Mbps PRBS 2^{16} – 1, 3.3 V and 25°C

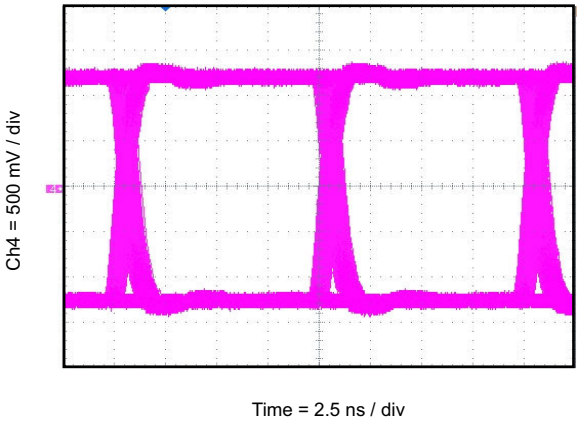

Figure 8-5. Eye Diagram at 100 Mbps PRBS 2^{16} – 1, 2.5 V and 25°C

8.2.3.1 Insulation Lifetime

Insulation lifetime projection data is collected by using industry-standard Time Dependent Dielectric Breakdown (TDDB) test method. In this test, all pins on each side of the barrier are tied together creating a two-terminal device and high voltage applied between the two sides; See Figure 8-6 for TDDB test setup. The insulation breakdown data is collected at various high voltages switching at 60 Hz over temperature. For reinforced insulation, VDE standard requires the use of TDDB projection line with failure rate of less than 1 part per million (ppm). Even though the expected minimum insulation lifetime is 20 years at the specified working isolation voltage, VDE reinforced certification requires additional safety margin of 20% for working voltage and 50% for lifetime which translates into minimum required insulation lifetime of 30 years at a working voltage that's 20% higher than the specified value.

Figure 8-7 shows the intrinsic capability of the isolation barrier to withstand high voltage stress over the lifetime of the barrier. Based on the TDDB data, the intrinsic capability of the insulation is 1500 V_{RMS} with a lifetime of 36 years. Other factors, such as package size, pollution degree, material group, and more can further limit the working voltage of the component. The working voltage of DW-16 package is specified up to 1500 V_{RMS}. At the lower working voltages, the corresponding insulation lifetime is much longer than 36 years. The insulation withstand capability of DWW-16 package is 2000 V_{RMS} with a corresponding lifetime of 34 years. DBQ-16 package at 400 V_{RMS} working voltage has a much longer lifetime than both DW-16 and DWW-16 packages.

Copyright © 2025 Texas Instruments Incorporated

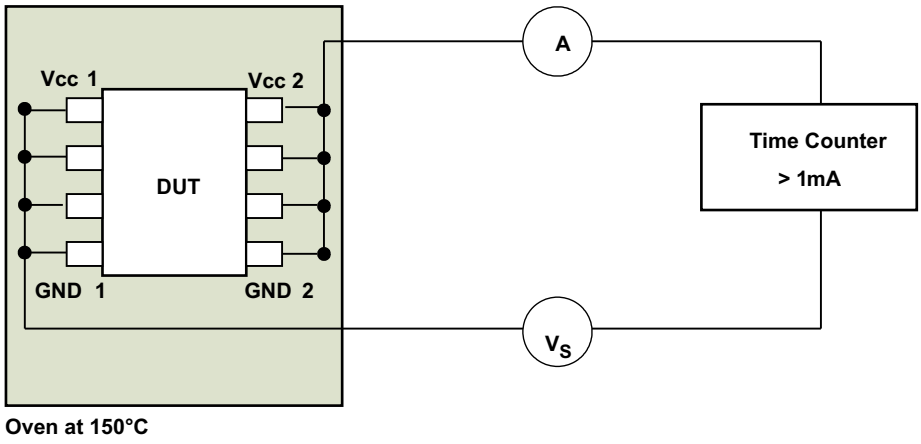

Figure 8-6. Test Setup for Insulation Lifetime Measurement

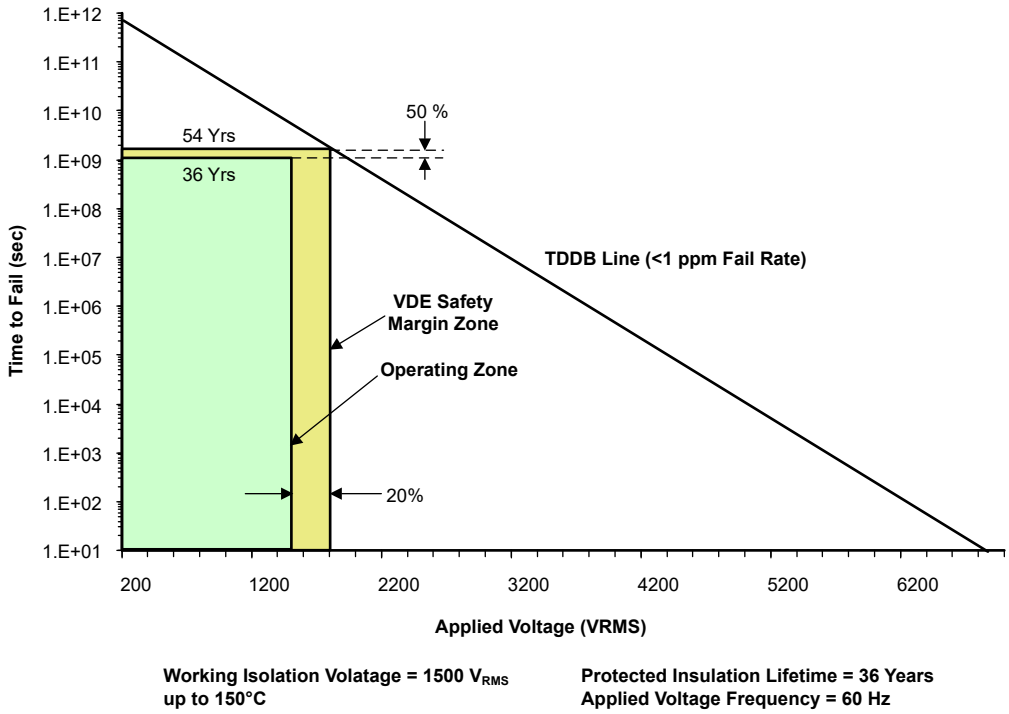

Figure 8-7. Insulation Lifetime Projection Data

8.3 Power Supply Recommendations

To help provide reliable operation at data rates and supply voltages, a 0.1-µF bypass capacitor is recommended at the input and output supply pins (V_{CC1} and V_{CC2}). The capacitors must be placed as close to the supply pins as possible. If only a single primary-side power supply is available in an application, isolated power can be generated for the secondary-side with the help of a transformer driver such as Texas Instruments' SN6501-Q1 or SN6505B-Q1 . For such applications, detailed power supply design and transformer selection recommendations are available in *SN6501-Q1 Transformer Driver for Isolated Power Supplies* and *SN6505x-Q1 Low-Noise 1-A Transformer Drivers for Isolated Power Supplies* data sheets .

Copyright © 2025 Texas Instruments Incorporated

8.4 Layout

8.4.1 Layout Guidelines

A minimum of four layers is required to accomplish a low EMI PCB design (see Figure 8-8). Layer stacking must be in the following order (top-to-bottom): high-speed signal layer, ground plane, power plane and low-frequency signal layer.

- Routing the high-speed traces on the top layer avoids the use of vias (and the introduction of the inductances) and allows for clean interconnects between the isolator and the transmitter and receiver circuits of the data link.
- Placing a solid ground plane next to the high-speed signal layer establishes controlled impedance for transmission line interconnects and provides an excellent low-inductance path for the return current flow.
- Placing the power plane next to the ground plane creates additional high-frequency bypass capacitance of approximately 100 pF/inch^2.
- Routing the slower speed control signals on the bottom layer allows for greater flexibility as these signal links typically have margin to tolerate discontinuities such as vias.

If an additional supply voltage plane or signal layer is needed, add a second power or ground plane system to the stack to keep the planes symmetrical. This makes the stack mechanically stable and prevents warping. Also the power and ground plane of each power system can be placed closer together, thus increasing the high-frequency bypass capacitance significantly.

For detailed layout recommendations, refer to the *Digital Isolator Design Guide*.

8.4.1.1 PCB Material

For digital circuit boards operating below 150 Mbps, (or rise and fall times higher than 1 ns), and trace lengths of up to 10 inches, use standard FR-4 UL94V-0 printed circuit boards. This PCB is preferred over cheaper alternatives due to the lower dielectric losses at high frequencies, less moisture absorption, greater strength and stiffness, and self-extinguishing flammability-characteristics.

8.4.2 Layout Example

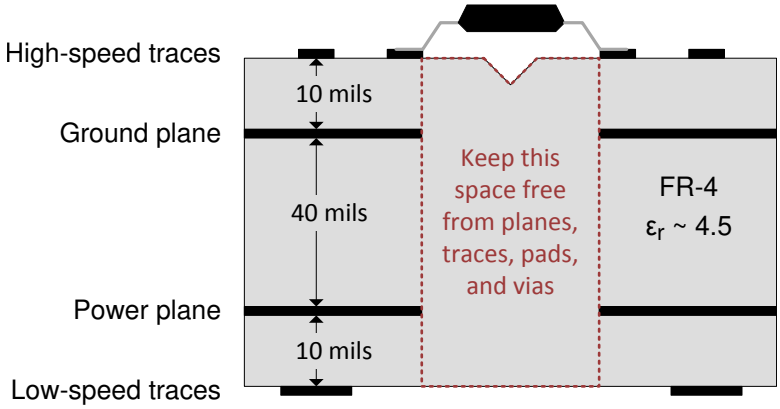

Figure 8-8. Layout Example Schematic

Copyright © 2025 Texas Instruments Incorporated

9 Device and Documentation Support

9.1 Documentation Support

9.1.1 Related Documentation

For related documentation, see the following:

- Texas Instruments, *Digital Isolator Design Guide*
- Texas Instruments, *Isolation Glossary*
- Texas Instruments, *How to use isolation to improve ESD, EFT, and Surge immunity in industrial systems* application report
- Texas Instruments, SN6501-Q1 *Transformer Driver for Isolated Power Supplies* data sheet
- Texas Instruments, SN6505x-Q1 *Low-Noise 1-A Transformer Drivers for Isolated Power Supplies* data sheet
- Texas Instruments, TCAN1042-Q1 *Automotive fault protected CAN transceiver with CAN FD* data sheet
- Texas Instruments, TMS320F28035 *Piccolo™ Microcontrollers* data sheet
- Texas Instruments, TPS76333-Q1 *Low-Power 150-mA Low-Dropout Linear Regulators* data sheet

9.2 Related Links

The table below lists quick access links. Categories include technical documents, support and community resources, tools and software, and quick access to sample or buy.

Table 9-1. Related Links

PARTS	PRODUCT FOLDER	ORDER NOW	TECHNICAL DOCUMENTS	TOOLS & SOFTWARE	SUPPORT & COMMUNITY
ISO7740-Q1	Click here	Click here	Click here	Click here	Click here
ISO7741-Q1	Click here	Click here	Click here	Click here	Click here
ISO7742-Q1	Click here	Click here	Click here	Click here	Click here

9.3 Receiving Notification of Documentation Updates

To receive notification of documentation updates, navigate to the device product folder on ti.com. In the upper right corner, click on *Alert me* to register and receive a weekly digest of any product information that has changed. For change details, review the revision history included in any revised document.

9.4 Support Resources

TI E2E™ support forums are an engineer's go-to source for fast, verified answers and design help — straight from the experts. Search existing answers or ask your own question to get the quick design help you need.

Linked content is provided "AS IS" by the respective contributors. They do not constitute TI specifications and do not necessarily reflect TI's views; see TI's Terms of Use.

9.5 Trademarks

Piccolo™ is a trademark of Texas Instruments.
TI E2E™ is a trademark of Texas Instruments.
All trademarks are the property of their respective owners.

9.6 Electrostatic Discharge Caution



This integrated circuit can be damaged by ESD. Texas Instruments recommends that all integrated circuits be handled with appropriate precautions. Failure to observe proper handling and installation procedures can cause damage.

ESD damage can range from subtle performance degradation to complete device failure. Precision integrated circuits may be more susceptible to damage because very small parametric changes could cause the device not to meet its published specifications.

9.7 Glossary

TI Glossary — This glossary lists and explains terms, acronyms, and definitions.

Copyright © 2025 Texas Instruments Incorporated

10 Revision History

NOTE: Page numbers for previous revisions may differ from page numbers in the current version.

Changes from Revision F (January 2024) to Revision G (October 2024) **Page**

- Updated the numbering format for tables, figures, and cross-references throughout the document..... 1
- Updated distance through isolation, while maintaining other insulation specifications.....8
- Updated the input leakage current for ENx pins throughout the electrical characteristic sections..... 12
- Updated the TDDB plot and the projected lifetime..... 32

Changes from Revision E (July 2023) to Revision F (January 2024) **Page**

- Updated the numbering format for tables, figures, and cross-references throughout the document..... 1
- Updated Thermal Characteristics, Safety Limiting Values, and Thermal Derating Curves to provide more accurate system-level thermal calculations..... 5
- Updated electrical and switching characteristics to match device performance.....5

Changes from Revision D (October 2020) to Revision E (July 2023) **Page**

- Changed standard name from: "DIN VDE V 0884-11:2017-01" to: "DIN EN IEC 60747-17 (VDE 0884-17)" throughout the document.....1
- Removed standard revision and year references from all standard names throughout the document..... 1
- Added Maximum impulse voltage (V_{IMP}) specification per DIN EN IEC 60747-17 (VDE 0884-17).....8
- Changed test conditions and values of Maximum surge isolation voltage (V_{IOSM}) specification per DIN EN IEC 60747-17 (VDE 0884-17)..... 8
- Clarified method b test conditions of Apparent charge (q_{PD}).....8
- Removed references to standard IEC/EN/CSA 60950-1 throughout the document.....10
- Switched the labels for V_{CC1} falling and V_{CC2} rising in the graph legend of *Power Supply Undervoltage Threshold vs Free-Air Temperature* 22

Changes from Revision C (February 2020) to Revision D (October 2020) **Page**

- Added Functional Safety bullet in Section 1 1

Changes from Revision B (June 2018) to Revision C (February 2020) **Page**

- Made editorial and cosmetic changes throughout the document 1
- Changed From: "Isolation Barrier Life: >40 Years" To: " >100-year projected lifetime at 1500 V_{RMS} working voltage" in Section 1 1
- Added "Up to 5700 V_{RMS} isolation rating" in Section 1 1
- Added "Up to 12.8 kV surge capability" in Section 1 1
- Added "±8 kV IEC 61000-4-2 contact discharge protection across isolation barrier" in Section 1 1
- Changed VDE standard name From: DIN V VDE V 0884-11:2017-01 To: DIN VDE V 0884-11:2017-01 throughout the document 1
- Deleted "All Certifications Complete except CQC Approval of DBQ-16 Package Devices" in Section 1 1
- Updated list of applications in Section 2 section..... 1
- Updated Simplified Schematic to show two isolation capacitors in series per channel instead of a single isolation capacitor 1
- Added "Contact discharge per IEC 61000-4-2" specification of ±8000 V 5

Copyright © 2025 Texas Instruments Incorporated

- Added the following table note to Data rate specification: "100 Mbps is the maximum specified data rate, although higher data rates are possible" 6
- Changed ISO7741-Q1 P_{D1} or Maximum power dissipation by side-1 from 50mW to 75 mW and P_{D2} or Maximum power dissipation by side-2 from 150mW to 125 mW 7
- Changed DW-16 package values of V_{IORM} from 1414 V_{PK} to 2121 V_{PK} and and V_{IOWM} from 1000 V_{RMS} and 1414 V_{DC} to 1500 V_{RMS} and 2121 V_{DC} 8
- Modified test conditions of V_{IOWM} and V_{IOSM} 8
- Updated table title to "Safety-Related Certifications" and updated certification information 10
- Corrected ground symbol for 'Input (ISO774xF)' schematic in Section 7.4.1 29
- Updated Figure 8-1 by changing CAN transceiver From: SN65HVD231Q To: TCAN1042-Q1 and transformer driver From: SN6501-Q1 To: SN6505x-Q1 30
- Added SN6505x-Q1 reference in Section 8.3 section 33
- Added '*How to use isolation to improve ESD, EFT, and Surge immunity in industrial systems*' application report to Section 9.1 section 35
- Added SN6505x-Q1 data sheet reference in Section 9.1 section 35

Changes from Revision A (May 2018) to Revision B (June 2018) **Page**

- Changed the isolation rating of the DBQ package from 2500 V_{RMS} to 3000 V_{RMS} 1
- Moved the HBM and CDM values from the *Featues* section to the *ESD Ratings* table 5
- Changed V_{IOTM} from 3600 V_{PK} to 4242 V_{PK} for the DBQ package 8
- Added V_{TEST} to the conditions for the maximum transient isolation voltage parameter 8
- Changed method b1 V_{ini} condition for apparent charge 8
- Changed all "plan to certify" to "Certified" and all "Certification Planned" to the proper certification number 10
- Changed CMTI TYP value from 75kV/µs to 100 kV/µs in all Electrical Characteristics tables 12
- Changed the t_{DO} TYP value from 6µs to 0.1µs and the MAX value from 9µs to 0.3µs in all Switching Characteristics tables 18
- Switched the line colors for V_{CC} at 2.5 V and V_{CC} at 3.3 V in Figure 5-14 22
- Switched the labels for V_{CC1} falling and V_{CC2} rising in the graph legend of *Power Supply Undervoltage Threshold vs Free-Air Temperature* 22

Changes from Revision * (November 2016) to Revision A (May 2018) **Page**

- Updated the Safety-Related Certifications table 10
- Changed minimum CMTI from 40 to 85 in all Electrical Characteristics tables 12

11 Mechanical, Packaging, and Orderable Information

The following pages include mechanical packaging and orderable information. This information is the most current data available for the designated devices. This data is subject to change without notice and revision of this document. For browser-based versions of this data sheet, refer to the left-hand navigation.

Copyright © 2025 Texas Instruments Incorporated

PACKAGING INFORMATION

Orderable part number	Status (1)	Material type (2)	Package | Pins	Package qty | Carrier	RoHS (3)	Lead finish/ Ball material (4)	MSL rating/ Peak reflow (5)	Op temp (°C)	Part marking (6)
ISO7740FQDBQRQ1	Active	Production	SSOP (DBQ) | 16	2500 | LARGE T&R	Yes	NIPDAU	Level-2-260C-1 YEAR	-40 to 125	(7740F, 7740FQ)
ISO7740FQDBQRQ1.A	Active	Production	SSOP (DBQ) | 16	2500 | LARGE T&R	Yes	NIPDAU	Level-2-260C-1 YEAR	-40 to 125	(7740F, 7740FQ)
ISO7740FQDWRQ1	Active	Production	SOIC (DW) | 16	2000 | LARGE T&R	Yes	NIPDAU	Level-2-260C-1 YEAR	-40 to 125	(ISO7740F, ISO7740 FQ)
ISO7740FQDWRQ1.A	Active	Production	SOIC (DW) | 16	2000 | LARGE T&R	Yes	NIPDAU	Level-2-260C-1 YEAR	-40 to 125	(ISO7740F, ISO7740 FQ)
ISO7740QDBQRQ1	Active	Production	SSOP (DBQ) | 16	2500 | LARGE T&R	Yes	NIPDAU	Level-2-260C-1 YEAR	-40 to 125	(7740, 7740Q)
ISO7740QDBQRQ1.A	Active	Production	SSOP (DBQ) | 16	2500 | LARGE T&R	Yes	NIPDAU	Level-2-260C-1 YEAR	-40 to 125	(7740, 7740Q)
ISO7740QDWRQ1	Active	Production	SOIC (DW) | 16	2000 | LARGE T&R	Yes	NIPDAU	Level-2-260C-1 YEAR	-40 to 125	(ISO7740, ISO7740Q)
ISO7740QDWRQ1.A	Active	Production	SOIC (DW) | 16	2000 | LARGE T&R	Yes	NIPDAU	Level-2-260C-1 YEAR	-40 to 125	(ISO7740, ISO7740Q)
ISO7741FQDBQRQ1	Active	Production	SSOP (DBQ) | 16	2500 | LARGE T&R	Yes	NIPDAU	Level-2-260C-1 YEAR	-40 to 125	(7741F, 7741FQ)
ISO7741FQDBQRQ1.A	Active	Production	SSOP (DBQ) | 16	2500 | LARGE T&R	Yes	NIPDAU	Level-2-260C-1 YEAR	-40 to 125	(7741F, 7741FQ)
ISO7741FQDWRQ1	Active	Production	SOIC (DW) | 16	2000 | LARGE T&R	Yes	NIPDAU	Level-2-260C-1 YEAR	-40 to 125	(ISO7741F, ISO7741 FQ)
ISO7741FQDWRQ1.A	Active	Production	SOIC (DW) | 16	2000 | LARGE T&R	Yes	NIPDAU	Level-2-260C-1 YEAR	-40 to 125	(ISO7741F, ISO7741 FQ)
ISO7741FQDWWRQ1	Active	Production	SOIC (DWW) | 16	1000 | LARGE T&R	Yes	NIPDAU	Level-2-260C-1 YEAR	-40 to 125	ISO7741FQ
ISO7741QDBQRQ1	Active	Production	SSOP (DBQ) | 16	2500 | LARGE T&R	Yes	NIPDAU	Level-2-260C-1 YEAR	-40 to 125	(7741, 7741Q)
ISO7741QDBQRQ1.A	Active	Production	SSOP (DBQ) | 16	2500 | LARGE T&R	Yes	NIPDAU	Level-2-260C-1 YEAR	-40 to 125	(7741, 7741Q)
ISO7741QDWRQ1	Active	Production	SOIC (DW) | 16	2000 | LARGE T&R	Yes	NIPDAU	Level-2-260C-1 YEAR	-40 to 125	(ISO7741, ISO7741Q)
ISO7741QDWRQ1.A	Active	Production	SOIC (DW) | 16	2000 | LARGE T&R	Yes	NIPDAU	Level-2-260C-1 YEAR	-40 to 125	(ISO7741, ISO7741Q)
ISO7741QDWWRQ1	Active	Production	SOIC (DWW) | 16	1000 | LARGE T&R	Yes	NIPDAU	Level-2-260C-1 YEAR	-40 to 125	ISO7741Q
ISO7742FQDBQRQ1	Active	Production	SSOP (DBQ) | 16	2500 | LARGE T&R	Yes	NIPDAU	Level-2-260C-1 YEAR	-40 to 125	(7742F, 7742FQ)
ISO7742FQDBQRQ1.A	Active	Production	SSOP (DBQ) | 16	2500 | LARGE T&R	Yes	NIPDAU	Level-2-260C-1 YEAR	-40 to 125	(7742F, 7742FQ)
ISO7742FQDWRQ1	Active	Production	SOIC (DW) | 16	2000 | LARGE T&R	Yes	NIPDAU	Level-2-260C-1 YEAR	-40 to 125	(ISO7742F, ISO7742 FQ)
ISO7742FQDWRQ1.A	Active	Production	SOIC (DW) | 16	2000 | LARGE T&R	Yes	NIPDAU	Level-2-260C-1 YEAR	-40 to 125	(ISO7742F, ISO7742 FQ)

Orderable part number	Status (1)	Material type (2)	Package | Pins	Package qty | Carrier	RoHS (3)	Lead finish/ Ball material (4)	MSL rating/ Peak reflow (5)	Op temp (°C)	Part marking (6)
ISO7742QDBQRQ1	Active	Production	SSOP (DBQ) | 16	2500 | LARGE T&R	Yes	NIPDAU	Level-2-260C-1 YEAR	-40 to 125	(7742, 7742Q)
ISO7742QDBQRQ1.A	Active	Production	SSOP (DBQ) | 16	2500 | LARGE T&R	Yes	NIPDAU	Level-2-260C-1 YEAR	-40 to 125	(7742, 7742Q)
ISO7742QDWRQ1	Active	Production	SOIC (DW) | 16	2000 | LARGE T&R	Yes	NIPDAU	Level-2-260C-1 YEAR	-40 to 125	(ISO7742, ISO7742Q)
ISO7742QDWRQ1.A	Active	Production	SOIC (DW) | 16	2000 | LARGE T&R	Yes	NIPDAU	Level-2-260C-1 YEAR	-40 to 125	(ISO7742, ISO7742Q)

(1) **Status:** For more details on status, see our product life cycle.

(2) **Material type:** When designated, preproduction parts are prototypes/experimental devices, and are not yet approved or released for full production. Testing and final process, including without limitation quality assurance, reliability performance testing, and/or process qualification, may not yet be complete, and this item is subject to further changes or possible discontinuation. If available for ordering, purchases will be subject to an additional waiver at checkout, and are intended for early internal evaluation purposes only. These items are sold without warranties of any kind.

(3) **RoHS values:** Yes, No, RoHS Exempt. See the TI RoHS Statement for additional information and value definition.

(4) **Lead finish/Ball material:** Parts may have multiple material finish options. Finish options are separated by a vertical ruled line. Lead finish/Ball material values may wrap to two lines if the finish value exceeds the maximum column width.

(5) **MSL rating/Peak reflow:** The moisture sensitivity level ratings and peak solder (reflow) temperatures. In the event that a part has multiple moisture sensitivity ratings, only the lowest level per JEDEC standards is shown. Refer to the shipping label for the actual reflow temperature that will be used to mount the part to the printed circuit board.

(6) **Part marking:** There may be an additional marking, which relates to the logo, the lot trace code information, or the environmental category of the part.

Multiple part markings will be inside parentheses. Only one part marking contained in parentheses and separated by a "~" will appear on a part. If a line is indented then it is a continuation of the previous line and the two combined represent the entire part marking for that device.

Important Information and Disclaimer: The information provided on this page represents TI's knowledge and belief as of the date that it is provided. TI bases its knowledge and belief on information provided by third parties, and makes no representation or warranty as to the accuracy of such information. Efforts are underway to better integrate information from third parties. TI has taken and continues to take reasonable steps to provide representative and accurate information but may not have conducted destructive testing or chemical analysis on incoming materials and chemicals. TI and TI suppliers consider certain information to be proprietary, and thus CAS numbers and other limited information may not be available for release.

In no event shall TI's liability arising out of such information exceed the total purchase price of the TI part(s) at issue in this document sold by TI to Customer on an annual basis.

OTHER QUALIFIED VERSIONS OF ISO7740-Q1, ISO7741-Q1, ISO7742-Q1 :

- Catalog : ISO7740, ISO7741, ISO7742

NOTE: Qualified Version Definitions:

- Catalog - TI's standard catalog product

TAPE AND REEL INFORMATION

REEL DIMENSIONS

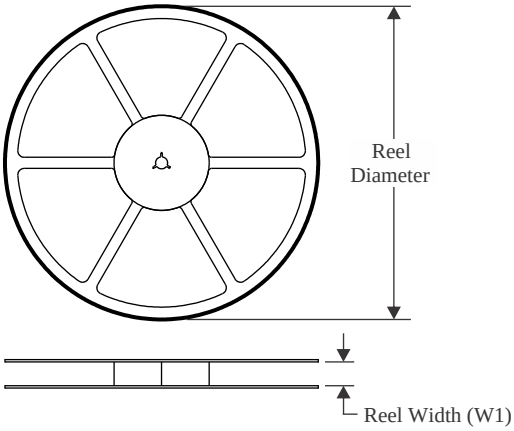

TAPE DIMENSIONS

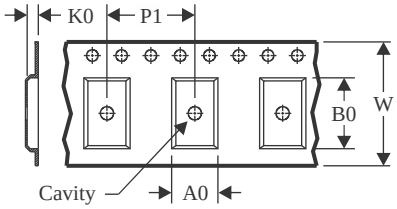

A0	Dimension designed to accommodate the component width
B0	Dimension designed to accommodate the component length
K0	Dimension designed to accommodate the component thickness
W	Overall width of the carrier tape
P1	Pitch between successive cavity centers

QUADRANT ASSIGNMENTS FOR PIN 1 ORIENTATION IN TAPE

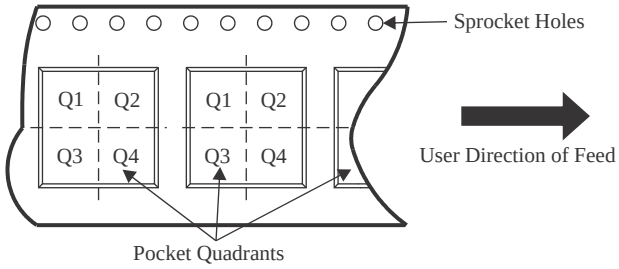

*All dimensions are nominal

Device	Package Type	Package Drawing	Pins	SPQ	Reel Diameter (mm)	Reel Width W1 (mm)	A0 (mm)	B0 (mm)	K0 (mm)	P1 (mm)	W (mm)	Pin1 Quadrant
ISO7740FQDBQRQ1	SSOP	DBQ	16	2500	330.0	12.4	6.4	5.2	2.1	8.0	12.0	Q1
ISO7740FQDWRQ1	SOIC	DW	16	2000	330.0	16.4	10.75	10.7	2.7	12.0	16.0	Q1
ISO7740QDBQRQ1	SSOP	DBQ	16	2500	330.0	12.4	6.4	5.2	2.1	8.0	12.0	Q1
ISO7740QDWRQ1	SOIC	DW	16	2000	330.0	16.4	10.75	10.7	2.7	12.0	16.0	Q1
ISO7740QDWRQ1	SOIC	DW	16	2000	330.0	16.4	10.75	10.7	2.7	12.0	16.0	Q1
ISO7740QDWRQ1	SOIC	DW	16	2000	330.0	16.4	10.75	10.7	2.7	12.0	16.0	Q1
ISO7741FQDBQRQ1	SSOP	DBQ	16	2500	330.0	12.4	6.4	5.2	2.1	8.0	12.0	Q1
ISO7741FQDBQRQ1	SSOP	DBQ	16	2500	330.0	12.4	6.4	5.2	2.1	8.0	12.0	Q1
ISO7741FQDBQRQ1	SSOP	DBQ	16	2500	330.0	12.4	6.4	5.2	2.1	8.0	12.0	Q1
ISO7741FQDWRQ1	SOIC	DW	16	2000	330.0	16.4	10.75	10.7	2.7	12.0	16.0	Q1
ISO7741FQDWRQ1	SOIC	DW	16	2000	330.0	16.4	10.75	10.7	2.7	12.0	16.0	Q1
ISO7741FQDWWRQ1	SOIC	DWW	16	1000	330.0	24.4	18.0	10.0	3.0	20.0	24.0	Q1
ISO7741QDBQRQ1	SSOP	DBQ	16	2500	330.0	12.4	6.4	5.2	2.1	8.0	12.0	Q1
ISO7741QDBQRQ1	SSOP	DBQ	16	2500	330.0	12.4	6.4	5.2	2.1	8.0	12.0	Q1
ISO7741QDBQRQ1	SSOP	DBQ	16	2500	330.0	12.4	6.4	5.2	2.1	8.0	12.0	Q1
ISO7741QDWRQ1	SOIC	DW	16	2000	330.0	16.4	10.75	10.7	2.7	12.0	16.0	Q1

Device	Package Type	Package Drawing	Pins	SPQ	Reel Diameter (mm)	Reel Width W1 (mm)	A0 (mm)	B0 (mm)	K0 (mm)	P1 (mm)	W (mm)	Pin1 Quadrant
ISO7741QDWRQ1	SOIC	DW	16	2000	330.0	16.4	10.75	10.7	2.7	12.0	16.0	Q1
ISO7741QDWWRQ1	SOIC	DWW	16	1000	330.0	24.4	18.0	10.0	3.0	20.0	24.0	Q1
ISO7742FQDBQRQ1	SSOP	DBQ	16	2500	330.0	12.4	6.4	5.2	2.1	8.0	12.0	Q1
ISO7742FQDBQRQ1	SSOP	DBQ	16	2500	330.0	12.4	6.4	5.2	2.1	8.0	12.0	Q1
ISO7742FQDBQRQ1	SSOP	DBQ	16	2500	330.0	12.4	6.4	5.2	2.1	8.0	12.0	Q1
ISO7742FQDWRQ1	SOIC	DW	16	2000	330.0	16.4	10.75	10.7	2.7	12.0	16.0	Q1
ISO7742FQDWRQ1	SOIC	DW	16	2000	330.0	16.4	10.75	10.7	2.7	12.0	16.0	Q1
ISO7742FQDWRQ1	SOIC	DW	16	2000	330.0	16.4	10.75	10.7	2.7	12.0	16.0	Q1
ISO7742QDBQRQ1	SSOP	DBQ	16	2500	330.0	12.4	6.4	5.2	2.1	8.0	12.0	Q1
ISO7742QDWRQ1	SOIC	DW	16	2000	330.0	16.4	10.75	10.7	2.7	12.0	16.0	Q1
ISO7742QDWRQ1	SOIC	DW	16	2000	330.0	16.4	10.75	10.7	2.7	12.0	16.0	Q1

TAPE AND REEL BOX DIMENSIONS

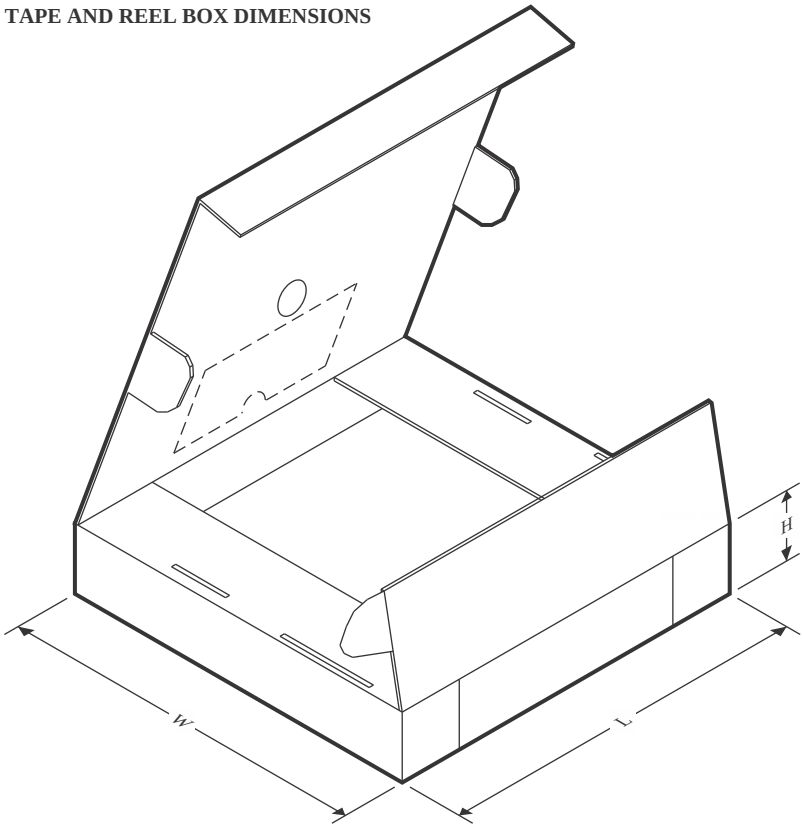

*All dimensions are nominal

Device	Package Type	Package Drawing	Pins	SPQ	Length (mm)	Width (mm)	Height (mm)
ISO7740FQDBQRQ1	SSOP	DBQ	16	2500	353.0	353.0	32.0
ISO7740FQDWRQ1	SOIC	DW	16	2000	353.0	353.0	32.0
ISO7740QDBQRQ1	SSOP	DBQ	16	2500	353.0	353.0	32.0
ISO7740QDWRQ1	SOIC	DW	16	2000	356.0	356.0	45.0
ISO7740QDWRQ1	SOIC	DW	16	2000	356.0	356.0	36.0
ISO7740QDWRQ1	SOIC	DW	16	2000	353.0	353.0	32.0
ISO7741FQDBQRQ1	SSOP	DBQ	16	2500	350.0	350.0	43.0
ISO7741FQDBQRQ1	SSOP	DBQ	16	2500	353.0	353.0	32.0
ISO7741FQDBQRQ1	SSOP	DBQ	16	2500	350.0	350.0	43.0
ISO7741FQDWRQ1	SOIC	DW	16	2000	356.0	356.0	36.0
ISO7741FQDWRQ1	SOIC	DW	16	2000	353.0	353.0	32.0
ISO7741FQDWWRQ1	SOIC	DWW	16	1000	350.0	350.0	43.0
ISO7741QDBQRQ1	SSOP	DBQ	16	2500	353.0	353.0	32.0
ISO7741QDBQRQ1	SSOP	DBQ	16	2500	350.0	350.0	43.0
ISO7741QDBQRQ1	SSOP	DBQ	16	2500	350.0	350.0	43.0
ISO7741QDWRQ1	SOIC	DW	16	2000	356.0	356.0	36.0
ISO7741QDWRQ1	SOIC	DW	16	2000	353.0	353.0	32.0
ISO7741QDWWRQ1	SOIC	DWW	16	1000	350.0	350.0	43.0

Device	Package Type	Package Drawing	Pins	SPQ	Length (mm)	Width (mm)	Height (mm)
ISO7742FQDBQRQ1	SSOP	DBQ	16	2500	353.0	353.0	32.0
ISO7742FQDBQRQ1	SSOP	DBQ	16	2500	350.0	350.0	43.0
ISO7742FQDBQRQ1	SSOP	DBQ	16	2500	350.0	350.0	43.0
ISO7742FQDWRQ1	SOIC	DW	16	2000	353.0	353.0	32.0
ISO7742FQDWRQ1	SOIC	DW	16	2000	356.0	356.0	45.0
ISO7742FQDWRQ1	SOIC	DW	16	2000	356.0	356.0	36.0
ISO7742QDBQRQ1	SSOP	DBQ	16	2500	353.0	353.0	32.0
ISO7742QDWRQ1	SOIC	DW	16	2000	353.0	353.0	32.0
ISO7742QDWRQ1	SOIC	DW	16	2000	356.0	356.0	45.0

PACKAGE OUTLINE

DWW0016A

SOIC - 2.65 mm max height

PLASTIC SMALL OUTLINE

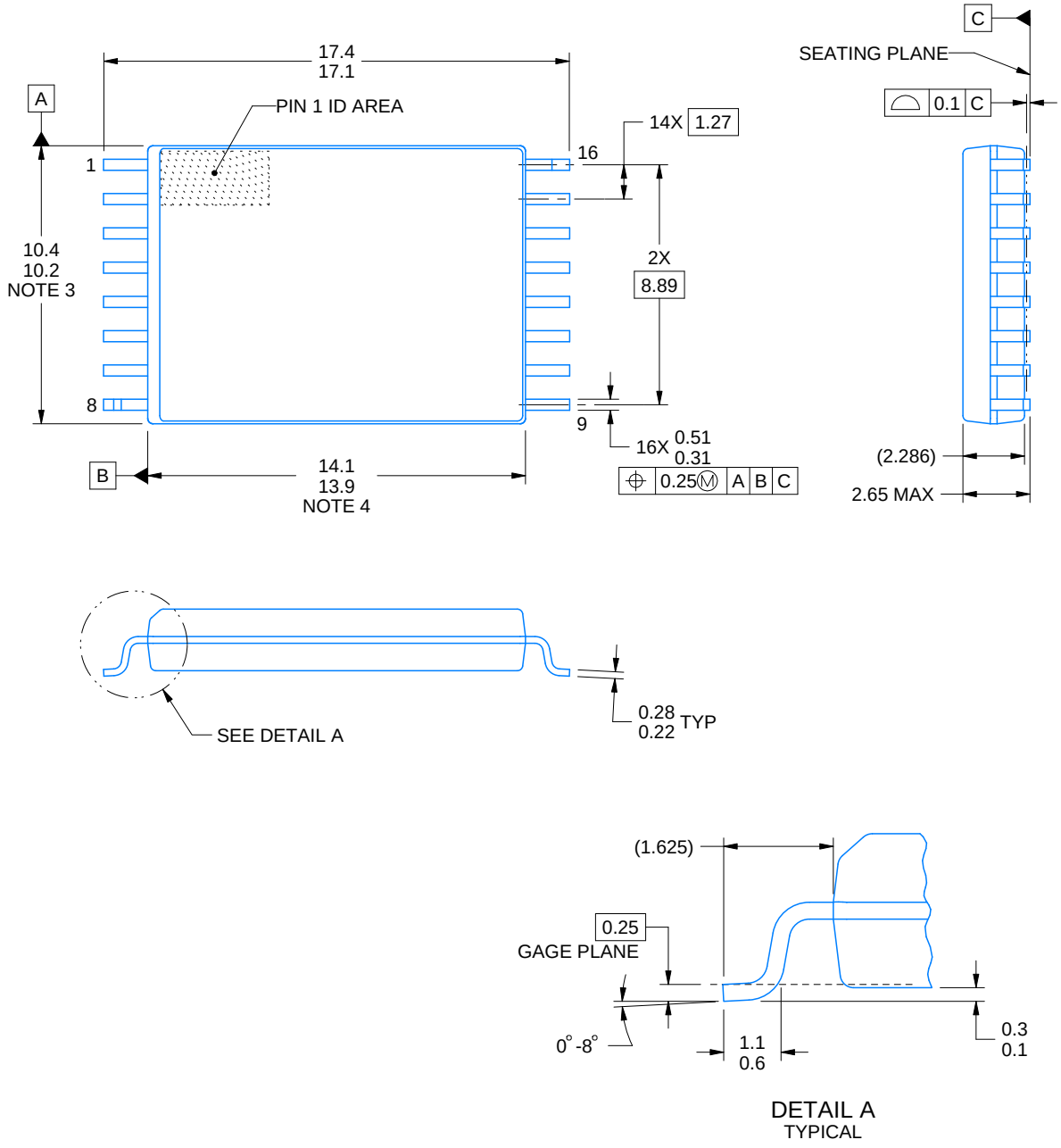

NOTES:

1. All linear dimensions are in millimeters. Any dimensions in parenthesis are for reference only. Dimensioning and tolerancing per ASME Y14.5M.
2. This drawing is subject to change without notice.
3. This dimension does not include mold flash, protrusions, or gate burrs. Mold flash, protrusions, or gate burrs shall not exceed 0,15 mm per side.
4. This dimension does not include interlead flash.

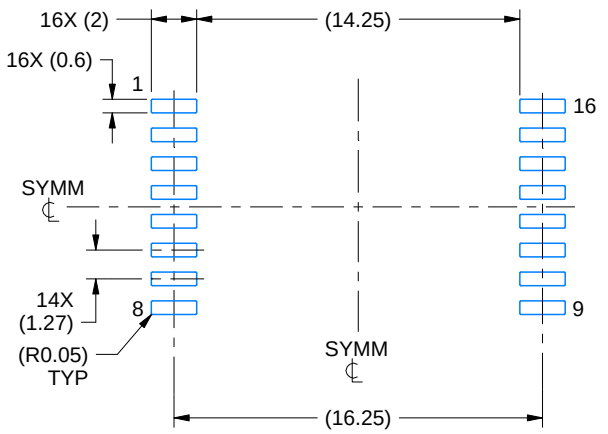

LAND PATTERN EXAMPLE
STANDARD
SCALE:3X

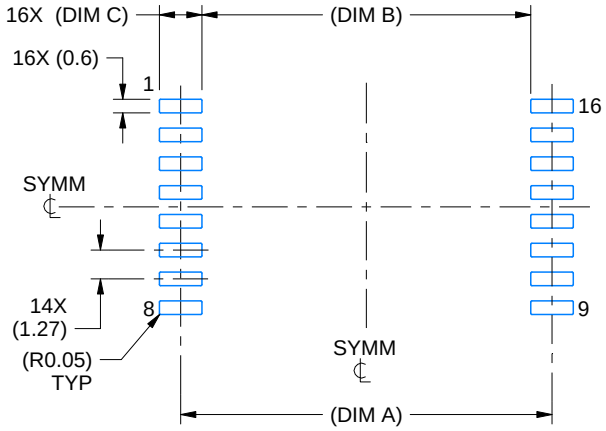

LAND PATTERN EXAMPLE
PCB CLEARANCE & CREEPAGE OPTIMIZED
SCALE:3X

OPTION	DIM A	DIM B	DIM C
01	16.375	14.5	1.875
02	16.625	15	1.625
03	16.725	15.2	1.525

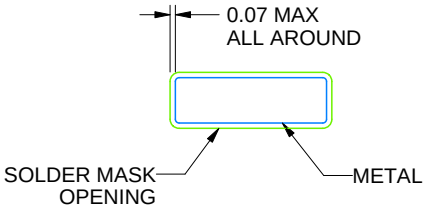

NON SOLDER MASK
DEFINED
(PREFERRED)

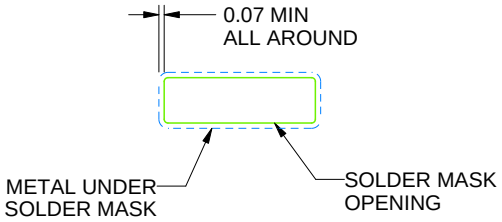

SOLDER MASK
DEFINED

SOLDER MASK DETAILS

4221501/B 10/2024

NOTES: (continued)

5. Publication IPC-7351 may have alternate designs.
6. Solder mask tolerances between and around signal pads can vary based on board fabrication site.

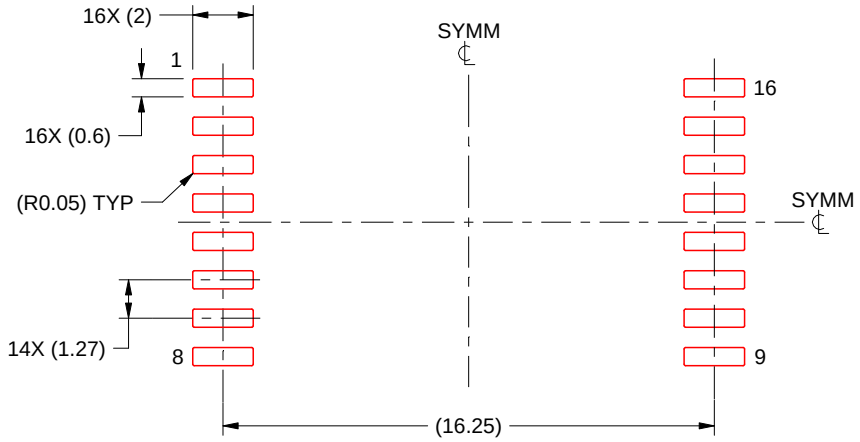

SOLDER PASTE EXAMPLE
STANDARD
BASED ON 0.125 mm THICK STENCIL
SCALE:4X

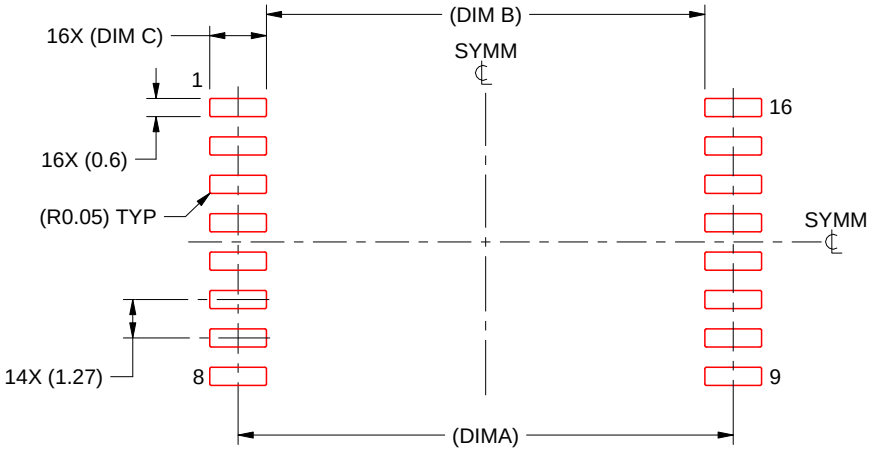

SOLDER PASTE EXAMPLE
PCB CLEARANCE & CREEPAGE OPTIMIZED
BASED ON 0.125 mm THICK STENCIL
SCALE:4X

OPTION	DIM A	DIM B	DIM C
01	16.375	14.5	1.875
02	16.625	15	1.625
03	16.725	15.2	1.525

4221501/B 10/2024

NOTES: (continued)

7. Laser cutting apertures with trapezoidal walls and rounded corners may offer better paste release. IPC-7525 may have alternate design recommendations.
8. Board assembly site may have different recommendations for stencil design.

GENERIC PACKAGE VIEW

DW 16

SOIC - 2.65 mm max height

7.5 x 10.3, 1.27 mm pitch

SMALL OUTLINE INTEGRATED CIRCUIT

This image is a representation of the package family, actual package may vary.
Refer to the product data sheet for package details.

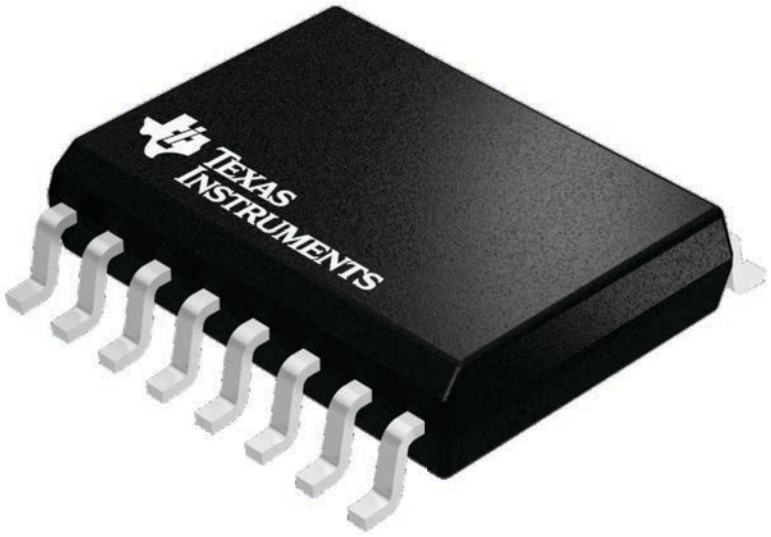

4224780/A

SOIC

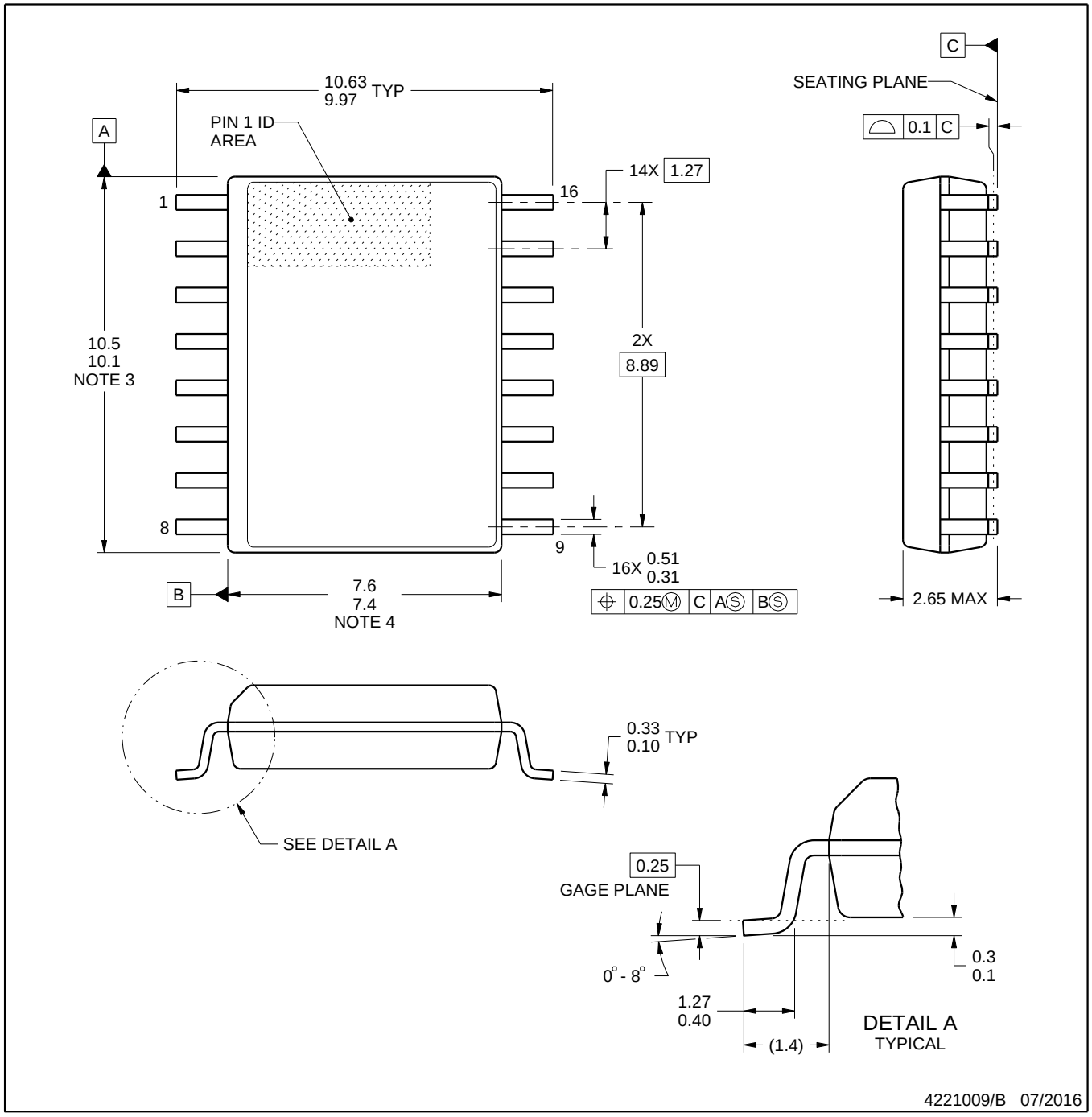

NOTES:

1. All linear dimensions are in millimeters. Dimensions in parenthesis are for reference only. Dimensioning and tolerancing per ASME Y14.5M.
2. This drawing is subject to change without notice.
3. This dimension does not include mold flash, protrusions, or gate burrs. Mold flash, protrusions, or gate burrs shall not exceed 0.15 mm, per side.
4. This dimension does not include interlead flash. Interlead flash shall not exceed 0.25 mm, per side.
5. Reference JEDEC registration MS-013.

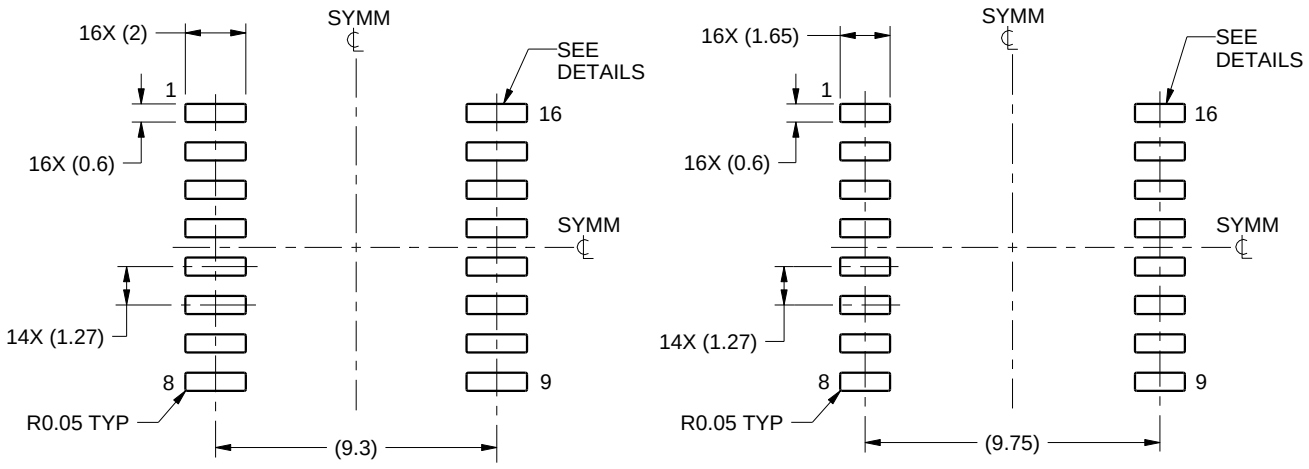

IPC-7351 NOMINAL
7.3 mm CLEARANCE/CREEPAGE

HV / ISOLATION OPTION
8.1 mm CLEARANCE/CREEPAGE

LAND PATTERN EXAMPLE
SCALE:4X

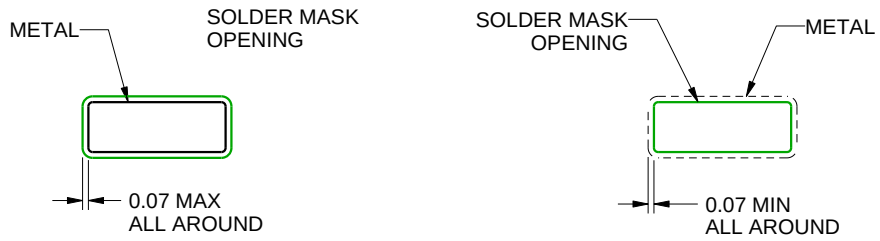

NON SOLDER MASK DEFINED

SOLDER MASK DEFINED

SOLDER MASK DETAILS

4221009/B 07/2016

NOTES: (continued)

6. Publication IPC-7351 may have alternate designs.
7. Solder mask tolerances between and around signal pads can vary based on board fabrication site.

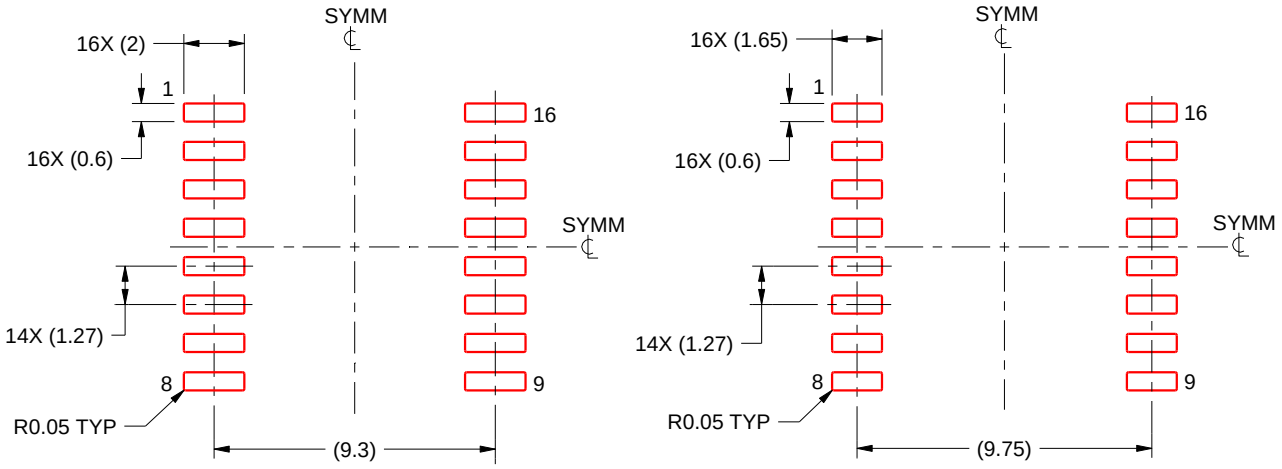

IPC-7351 NOMINAL
7.3 mm CLEARANCE/CREEPAGE

HV / ISOLATION OPTION
8.1 mm CLEARANCE/CREEPAGE

SOLDER PASTE EXAMPLE
BASED ON 0.125 mm THICK STENCIL
SCALE:4X

4221009/B 07/2016

NOTES: (continued)

8. Laser cutting apertures with trapezoidal walls and rounded corners may offer better paste release. IPC-7525 may have alternate design recommendations.
9. Board assembly site may have different recommendations for stencil design.

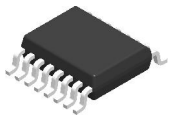

PACKAGE OUTLINE

DBQ0016A

SSOP - 1.75 mm max height

SHRINK SMALL-OUTLINE PACKAGE

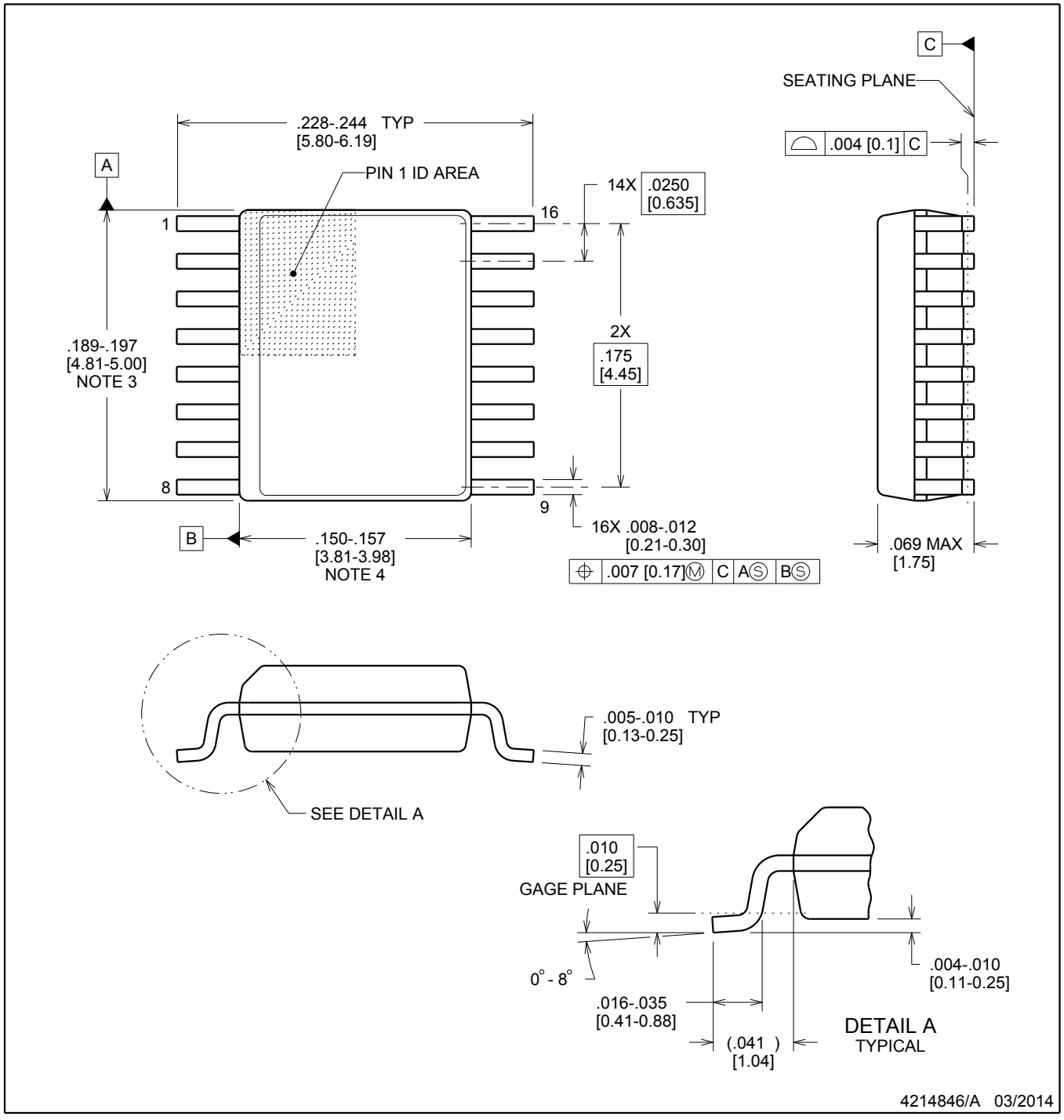

NOTES:

1. Linear dimensions are in inches [millimeters]. Dimensions in parenthesis are for reference only. Controlling dimensions are in inches. Dimensioning and tolerancing per ASME Y14.5M.
2. This drawing is subject to change without notice.
3. This dimension does not include mold flash, protrusions, or gate burrs. Mold flash, protrusions, or gate burrs shall not exceed .006 inch, per side.
4. This dimension does not include interlead flash.
5. Reference JEDEC registration MO-137, variation AB.

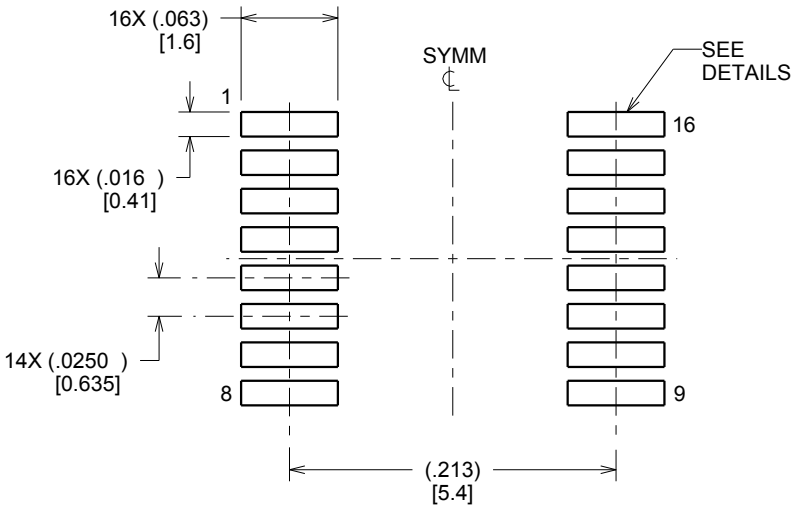

LAND PATTERN EXAMPLE
SCALE:8X

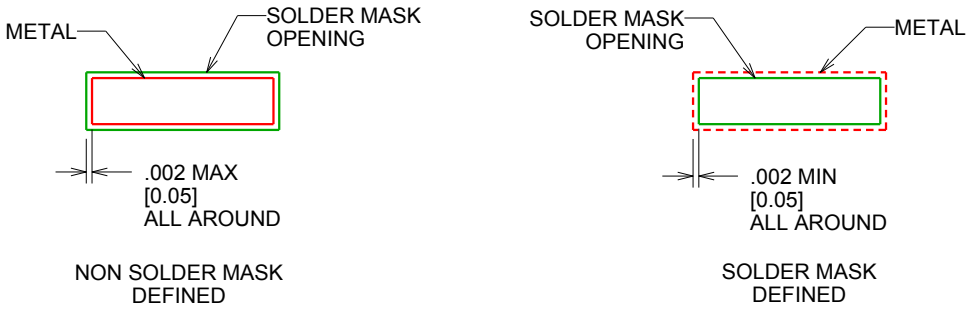

SOLDER MASK DETAILS

4214846/A 03/2014

NOTES: (continued)

6. Publication IPC-7351 may have alternate designs.
7. Solder mask tolerances between and around signal pads can vary based on board fabrication site.

EXAMPLE STENCIL DESIGN

DBQ0016A

SSOP - 1.75 mm max height

SHRINK SMALL-OUTLINE PACKAGE

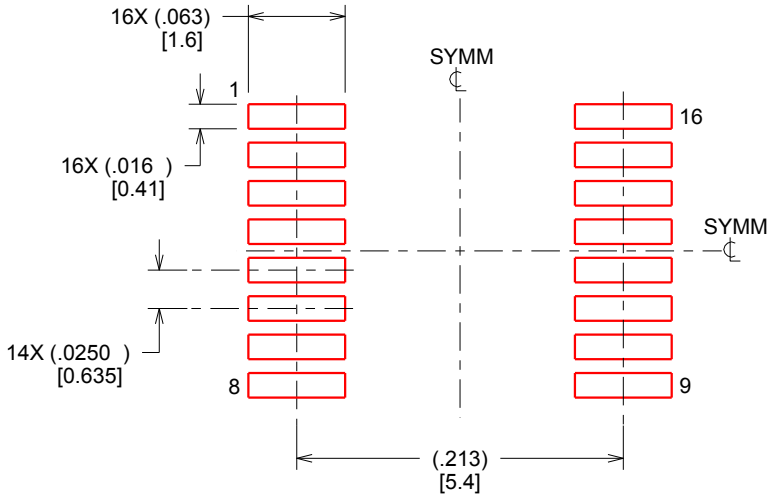

SOLDER PASTE EXAMPLE
BASED ON .005 INCH [0.127 MM] THICK STENCIL
SCALE:8X

4214846/A 03/2014

NOTES: (continued)

8. Laser cutting apertures with trapezoidal walls and rounded corners may offer better paste release. IPC-7525 may have alternate design recommendations.
9. Board assembly site may have different recommendations for stencil design.

IMPORTANT NOTICE AND DISCLAIMER

TI PROVIDES TECHNICAL AND RELIABILITY DATA (INCLUDING DATASHEETS), DESIGN RESOURCES (INCLUDING REFERENCE DESIGNS), APPLICATION OR OTHER DESIGN ADVICE, WEB TOOLS, SAFETY INFORMATION, AND OTHER RESOURCES “AS IS” AND WITH ALL FAULTS, AND DISCLAIMS ALL WARRANTIES, EXPRESS AND IMPLIED, INCLUDING WITHOUT LIMITATION ANY IMPLIED WARRANTIES OF MERCHANTABILITY, FITNESS FOR A PARTICULAR PURPOSE OR NON-INFRINGEMENT OF THIRD PARTY INTELLECTUAL PROPERTY RIGHTS.

These resources are intended for skilled developers designing with TI products. You are solely responsible for (1) selecting the appropriate TI products for your application, (2) designing, validating and testing your application, and (3) ensuring your application meets applicable standards, and any other safety, security, regulatory or other requirements.

These resources are subject to change without notice. TI grants you permission to use these resources only for development of an application that uses the TI products described in the resource. Other reproduction and display of these resources is prohibited. No license is granted to any other TI intellectual property right or to any third party intellectual property right. TI disclaims responsibility for, and you fully indemnify TI and its representatives against any claims, damages, costs, losses, and liabilities arising out of your use of these resources.

TI’s products are provided subject to TI’s Terms of Sale, TI’s General Quality Guidelines, or other applicable terms available either on ti.com or provided in conjunction with such TI products. TI’s provision of these resources does not expand or otherwise alter TI’s applicable warranties or warranty disclaimers for TI products. Unless TI explicitly designates a product as custom or customer-specified, TI products are standard, catalog, general purpose devices.

TI objects to and rejects any additional or different terms you may propose.

Copyright © 2026, Texas Instruments Incorporated

Last updated 10/2025