LM117QML-SP RHA 4.25-V to 41.25-V 3-Terminal Adjustable Regulator

1 Features

- Radiation hardness assured (RHA) up to a total ionizing dose (TID) of 100 krad(Si)
  - High dose rate (HDR) option at 50-300 rad(Si)/s
  - Low dose rate (LDR) option at 10 mrad(Si)/s
- Specified 0.5-A or 1.5-A output current options
- Adjustable output down to 1.2 V
- Current limit constant with temperature
- Output is short-circuit protected

2 Applications

- Satellite electrical power system (EPS)
- Bias supply for PWM controllers

3 Description

The LM117QML-SP 3-terminal positive voltage linear regulator is capable of supplying either 0.5 A or 1.5 A over a 1.2-V to 37-V output range. It is simple to use and requires only two external resistors to set the output voltage.

The regulator is "floating" and sees only the input-to-output differential voltage, thus enabling supplies of several hundred volts to be regulated as long as the maximum input-to-output differential is not exceeded.

The flight-proven LM117QML-SP offers full overload protection such as current limit, thermal overload protection, and safe area protection. It is exceptionally versatile and can also be used as an adjustable switching regulator, a programmable output regulator, a precision current regulator, and more.

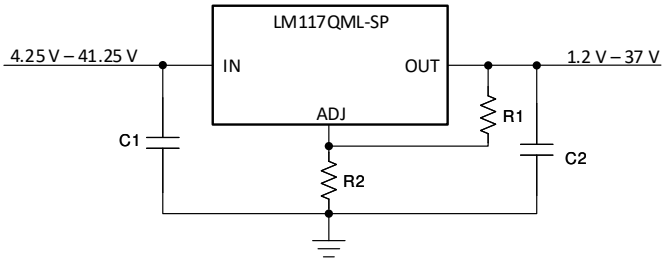

Typical Schematic

For high voltage applications, the LM117HVQML-SP is a pin-to-pin drop-in replacement suitable for up to 60 V. For the negative complement of the LM117QML-SP, see the LM137QML-SP.

Device Information

PART NUMBER(1)	GRADE(2)	PACKAGE(3)
LM117GWRLQMLV	LDR Flight grade QMLV RHA 100 krad(Si)	CFP SOIC (NAC) 16 pin 6.35 mm × 9.91 mm Mass = 0.467 g(5)
5962R9951707VZA		
LM117GWRQMLV	HDR Flight grade QMLV RHA 100 krad(Si)	
5962R9951706VZA		
LM117HRLQMLV	LDR Flight grade QMLV RHA 100 krad(Si)	TO-39 (NDT) 3 pin 8.26 mm × 8.26 mm Mass = 1.036 g(5)
5962R9951705VXA		
LM117HRQMLV	HDR Flight grade QMLV RHA 100 krad(Si)	
5962R9951703VXA		
LM117NDT/EM	Engineering samples(4)	
LM117KRQMLV	HDR Flight grade QMLV RHA 100 krad(Si)	TO-3 (K) 2 pin 25.4 mm × 38.94 mm Mass = 12.291 g(5)
5962R9951704VYA		
LM117K/EM	Engineering samples(4)	
LM117H MDE	LDR Flight grade QMLV RHA 100 krad(Si)	Die 2.18 mm × 2.36 mm
5962R9951705V9A		
LM117H MDR	HDR Flight grade QMLV RHA 100 krad(Si)	
5962R9951703V9A		

(1) For all available packages, see the orderable addendum at the end of the data sheet.
(2) For additional information about part grade, view SLYB235.
(3) The TI Packaging page can be referenced for additional packing details.
(4) These units are intended for engineering evaluation only and are processed to a noncompliant flow. Not suitable for qualification, production, radiation testing, or flight use. Not warranted for performance over full MIL specified temperature range (–55°C to 125°C) or operating life.
(5) Mass is accurate to ±10%.

An IMPORTANT NOTICE at the end of this data sheet addresses availability, warranty, changes, use in safety-critical applications, intellectual property matters and other important disclaimers. PRODUCTION DATA.

Table of Contents

1 Features....1
2 Applications....1
3 Description....1
4 Revision History....2
5 Device Comparison Table....3
6 Pin Configurations and Functions....4
7 Specifications....5
7.1 Absolute Maximum Ratings....5
7.2 ESD Ratings....5
7.3 Recommended Operating Conditions....5
7.4 Thermal Information....5
7.5 Electrical Characteristics: 0.5–A I_{OUT} Devices (LM117H, LM117GW)....6
7.6 Parameter Drift: 0.5–A I_{OUT} Devices (LM117H, LM117GW)....7
7.7 Electrical Characteristics: 1.5–A I_{OUT} Devices (LM117K)....8
7.8 Parameter Drift: 1.5–A I_{OUT} Devices (LM117K)....9
7.9 Quality Conformance Inspection....10
7.10 Typical Characteristics....11
8 Detailed Description....13
8.1 Overview....13
8.2 Functional Block Diagram....13
8.3 Setting Output Voltage....14
8.4 External Capacitors....15
8.5 Load Regulation....15
8.6 Protection Diodes....15
9 Application and Implementation....17
9.1 Typical Applications....17
10 Power Supply Recommendations....26
11 Layout....27
11.1 Layout Guidelines....27
12 Device and Documentation Support....28
12.1 Device Support....28
12.2 Documentation Support....28
12.3 Receiving Notification of Documentation Updates....28
12.4 Support Resources....28
12.5 Trademarks....28
12.6 Electrostatic Discharge Caution....28
12.7 Glossary....28

4 Revision History

NOTE: Page numbers for previous revisions may differ from page numbers in the current version.

DATE	REVISION	NOTES
April 2021	*	Initial Release

Copyright © 2021 Texas Instruments Incorporated

5 Device Comparison Table

PART NUMBER	INPUT VOLTAGE RANGE	I_{OUT}	PART NUMBER SUFFIX	PACKAGE	RADIATION TESTING (1)
LM117QML-SP	4.25 V to 41.25 V	1.5 A	K	TO-3 (K) 2 pin	HDR 100 krad(Si)
		0.5 A	H	TO-39 (NDT) 3 pin	LDR 100 krad(Si)
					HDR 100 krad(Si)
				Die	LDR 100 krad(Si)
					HDR 100 krad(Si)
			GW	CFP SOIC (NAC) 16 pin	LDR 100 krad(Si)
					HDR 100 krad(Si)
LM117HVQML-SP	4.25 V to 60 V	0.5 A	H	TO-39 (NDT) 3 pin	LDR 100 krad(Si)
					HDR 100 krad(Si)
				Die	LDR 100 krad(Si)
					HDR 100 krad(Si)
			GW	CFP SOIC (NAC) 16 pin	LDR 100 krad(Si)
					HDR 100 krad(Si)
LM137QML-SP	–41.25 V to –4.25 V	1.5 A	H	TO-39 (NDT) 3 pin	HDR 30 krad(Si)

(1) The Device Information table can be referenced for information on which part numbers correspond to LDR or HDR options.

Copyright © 2021 Texas Instruments Incorporated

6 Pin Configurations and Functions

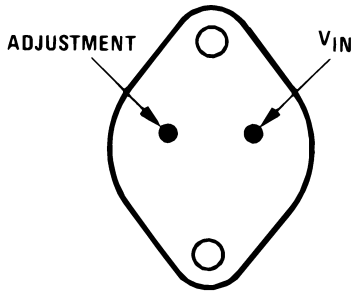

Figure 6-1. LM117K K Package
2-Pin TO-3 (Metal Can)
Bottom View

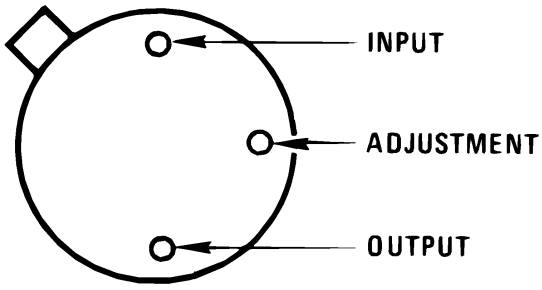

Figure 6-2. LM117H, LM117NDT NDT Package
3-Pin TO-39 (Metal Can)
Bottom View

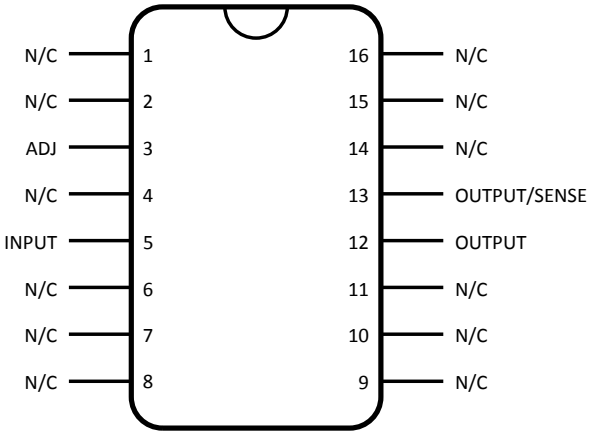

Figure 6-3. LM117GW NAC Package
16-Pin CFP SOIC
Top View

Table 6-1. Pin Functions

PIN				I/O	DESCRIPTION
NAME	TO-3	TO-39	CFP SOIC		
ADJ	1	2	3	—	Adjust pin
V_{IN}	2	1	5	I	Input voltage pin for the regulator
V_{OUT}	CASE	3, CASE	12	O	Output voltage pin for the regulator
OUTPUT/SENSE	—	—	13	—	Used to sense the output voltage. Must be connected to VOUT for proper operation.
N/C	—	—	1, 2, 4, 6, 7, 8, 9, 10, 11, 14, 15, 16	—	No connection. These pins have no internal connections and may be grounded or left floating. They may also be connected to the board heatsink and used for thermal dissipation.

Copyright © 2021 Texas Instruments Incorporated

7 Specifications

7.1 Absolute Maximum Ratings

Over operating free-air temperature range (unless otherwise noted)(1)

		MIN	MAX	UNIT
	Power dissipation(2)	Internally limited		
	Input-output voltage differential	–0.3	40	V
T_{stg}	Storage temperature	–65	150	°C
T_{Jmax}	Maximum junction temperature		150	°C
	Lead temperature metal package		300	°C

(1) Operation outside the Absolute Maximum Ratings may cause permanent device damage. Absolute Maximum Ratings do not imply functional operation of the device at these or any other conditions beyond those listed under Recommended Operating Conditions. If used outside the Recommended Operating Conditions but within the Absolute Maximum Ratings, the device may not be fully functional, and this may affect device reliability, functionality, performance, and shorten the device lifetime.

(2) The maximum power dissipation must be derated at elevated temperatures and is dictated by T_{Jmax} (maximum junction temperature), θ_{JA} (package junction to ambient thermal resistance), and T_A (ambient temperature). The maximum allowable power dissipation at any temperature is $P_{Dmax} = (T_{Jmax} – T_A) / \theta_{JA}$ or the number given in the Absolute Maximum Ratings, whichever is lower. Although power dissipation is internally limited, these specifications are applicable for power dissipations of 2 W for the TO-39 and CFP packages, and 20 W for the TO-3 package.

7.2 ESD Ratings

			VALUE	UNIT
$V_{(ESD)}$	Electrostatic discharge	Human-body model (HBM)(1) (2)	±3000	V

(1) JEDEC document JEP155 states that 500-V HBM allows safe manufacturing with a standard ESD control process.

(2) Human body model, 100 pF discharged through a 1.5-kΩ resistor.

7.3 Recommended Operating Conditions

		MIN	MAX	UNIT
T_A	Operating temperature	–55	125	°C
V_{IN}	Input voltage	4.25	41.25	V

7.4 Thermal Information

THERMAL METRIC(1)			PACKAGE			UNIT
			TO-3 (K) 2 pin (LM117K)	TO-39 (NDT) 3 pin (LM117H)	CFP SOIC (NAC) 16 pin (LM117GW)	
$R_{\theta JA}$	Junction-to-ambient thermal resistance	Still air	39	186	130	°C/W
		500 LF/min air flow	14	64	80	
$R_{\theta JC(bot)}$	Junction-to-case (bottom) thermal resistance		1.9	21	7	°C/W

(1) For more information, see the *Semiconductor and IC package thermal metrics* application report.

Copyright © 2021 Texas Instruments Incorporated

7.5 Electrical Characteristics: 0.5–A I_{OUT} Devices (LM117H, LM117GW)

Over operating temperature range (T = –55°C to 125°C) unless otherwise noted.

PARAMETER		TEST CONDITIONS[1]		SUBGROUP[2]	MIN	MAX	UNIT
V_O	Output voltage	V_I = 4.25 V, I_L = –5 mA		1, 2, 3	1.2	1.3	V
			25°C Post-radiation	1		1.35	
		V_I = 4.25 V, I_L = –500 mA		1, 2, 3	1.2	1.3	
			25°C Post-radiation	1		1.35	
		V_I = 41.25 V, I_L = –5 mA		1, 2, 3	1.2	1.3	
			25°C Post-radiation	1		1.35	
		V_I = 41.25V, I_L = –50mA		1, 2, 3	1.2	1.3	
			25°C Post-radiation	1		1.35	
		V_I = 6.25 V, I_L = –5 mA	125°C	2	1.2	1.3	
V_{RLine}	Line regulation	4.25 V ≤ V_I ≤ 41.25 V, I_L = –5 mA	25°C	1	–9	9	mV
			125°C, –55°C	2, 3	–23	23	
			25°C Post-radiation	1	–25	25	
V_{RLoad}	Load regulation	V_I = 6.25 V, –500 mA ≤ I_L ≤ –5 mA		1, 2, 3	–12	12	mV
		V_I = 41.25 V, –50 mA ≤ I_L ≤ –5 mA		1, 2, 3	–12	12	
V_{RTh}	Thermal regulation	V_I = 14.6 V, I_L = –500 mA	25°C	1	–12	12	mV
I_{Adj}	Adjust pin current	V_I = 4.25 V, I_L = –5 mA		1, 2, 3	–100	–15	µA
		V_I = 41.25 V, I_L = –5 mA		1, 2, 3	–100	–15	
ΔI_{Adj}/ Line	Adjust pin current change	4.25 V ≤ V_I ≤ 41.25 V, I_L = –5 mA		1, 2, 3	–5	5	µA
ΔI_{Adj} / Load	Adjust pin current change	V_I = 6.25 V, –500 mA ≤ I_L ≤ –5 mA		1, 2, 3	–5	5	µA
I_Q	Minimum load current	V_I = 4.25 V, Forced V_O = 1.4 V		1, 2, 3	–3	–0.5	mA
		V_I = 14.25 V, Forced V_O = 1.4 V		1, 2, 3	–3	–0.5	
		V_I = 41.25 V, Forced V_O = 1.4 V		1, 2, 3	–5	–1	
I_{OS}	Output short circuit current	V_I = 4.25 V		1, 2, 3	–1.8	–0.5	A
		V_I = 40 V		1, 2, 3	–0.5	–0.05	
V_O (Recov)	Output voltage recovery	V_I = 4.25 V, R_L = 2.5 Ω, C_L = 20 µF		1, 2, 3	1.2	1.3	V
			25°C Post-radiation	1		1.35	
		V_I = 40 V, R_L = 250 Ω		1, 2, 3	1.2	1.3	
			25°C Post-radiation	1		1.35	
V_{Start}	Voltage start-up	V_I = 4.25 V, R_L = 2.5 Ω, C_L = 20 µF, I_L = –500 mA		1, 2, 3	1.2	1.3	V
V_{NO}	Output noise voltage	V_I = 6.25 V, I_L = –50 mA	25°C	7		120	μV_{RMS}
ΔV_O / ΔV_I	Line transient response	V_I = 6.25 V, ΔV_I = 3 V, I_L = –10 mA	25°C	7		6	mV/V

Copyright © 2021 Texas Instruments Incorporated

7.5 Electrical Characteristics: 0.5–A I_{OUT} Devices (LM117H, LM117GW) (continued)

Over operating temperature range (T = –55°C to 125°C) unless otherwise noted.

PARAMETER		TEST CONDITIONS[1]		SUBGROUP[2]	MIN	MAX	UNIT
$\Delta V_O / \Delta I_L$	Load transient response	V_I = 6.25V, ΔI_L = –200 mA, I_L = –50 mA	25°C	7		0.6	mV/mA
$\Delta V_I / \Delta V_O$	Ripple rejection	V_I = 6.25 V, I_L = –125 mA, E_I = 1 V_{RMS} at f = 2400 Hz	25°C	4	65		dB
			25°C Post-radiation	4	60		

(1) Pre- and post-irradiation limits are identical for the parameters above unless specified by the test conditions.

(2) For subgroup definitions, see Quality Conformance Inspection table.

7.6 Parameter Drift: 0.5–A I_{OUT} Devices (LM117H, LM117GW)

The following deltas are for Group C (Life Test). Data is measured at 25°C.

PARAMETER		TEST CONDITIONS	SUBGROUP [1]	MIN	MAX	UNIT
V_O	Output voltage	V_I = 4.25 V, I_L = –5 mA	1	–0.01	0.01	V
		V_I = 4.25 V, I_L = –500 mA	1	–0.01	0.01	
		V_I = 41.25 V, I_L = –5 mA	1	–0.01	0.01	
		V_I = 41.25 V, I_L = –50 mA	1	–0.01	0.01	
V_{RLine}	Line regulation	4.25 V ≤ V_I ≤ 41.25 V, I_L = –5 mA	1	–4.0	4.0	mV
I_{Adj}	Adjust pin current	V_I = 4.25 V, I_L = –5 mA	1	–10	10	µA
		V_I = 41.25 V, I_L = –5 mA	1	–10	10	
V_O (Recov)	Output voltage recovery	V_I = 4.25 V, R_L = 2.5 Ω, C_L = 20 µF	1	–0.01	0.01	V
		V_I = 40 V, R_L = 250 Ω	1	–0.01	0.01	

(1) For subgroup definitions, see Quality Conformance Inspection table.

Copyright © 2021 Texas Instruments Incorporated

7.7 Electrical Characteristics: 1.5–A I_{OUT} Devices (LM117K)

Over operating temperature range (T = –55°C to 125°C) unless otherwise noted.

PARAMETER		TEST CONDITIONS (1)		SUBGROUP(2)	MIN	MAX	UNIT
V_O	Output voltage	V_I = 4.25 V, I_L = –5 mA		1, 2, 3	1.2	1.3	V
			25°C Post-radiation	1		1.35	
		V_I = 4.25 V, I_L = –1.5 A		1, 2, 3	1.2	1.3	
			25°C Post-radiation	1		1.35	
		V_I = 41.25 V, I_L = –5 mA		1, 2, 3	1.2	1.3	
			25°C Post-radiation	1		1.35	
		V_I = 41.25 V, I_L = –200 mA		1, 2, 3	1.2	1.3	
			25°C Post-radiation	1		1.35	
		V_I = 6.25 V, I_L = –5 mA	125°C	2	1.2	1.3	
V_{RLine}	Line regulation	4.25 V ≤ V_I ≤ 41.25 V, I_L = –5 mA	25°C	1	–9	9	mV
			125°C, –55°C	2, 3	–23	23	
			25°C Post-radiation	1	–25	25	
V_{RLoad}	Load regulation	V_I = 6.25 V, –1.5 A ≤ I_L ≤ –5 mA	25°C	1	–3.5	3.5	mV
			125°C, –55°C	2, 3	–12	12	
			25°C Post-radiation	1	–7	7	
		V_I = 41.25 V, –200 mA ≤ I_L ≤ –5 mA	25°C	1	–3.5	3.5	
			125°C, –55°C	2, 3	–12	12	
			25°C Post-radiation	1	–7	7	
V_{RTh}	Thermal regulation	V_I = 14.6 V, I_L = –1.5 A	25°C	1	–12	12	mV
I_{Adj}	Adjust pin current	V_I = 4.25 V, I_L = –5 mA		1, 2, 3	–100	–15	µA
		V_I = 41.25 V, I_L = –5 mA		1, 2, 3	–100	–15	
ΔI_{Adj}/ Line	Adjust pin current change	4.25 V ≤ V_I ≤ 41.25 V, I_L = –5 mA		1, 2, 3	–5	5	µA
ΔI_{Adj} / Load	Adjust pin current change	V_I = 6.25 V, –1.5 A ≤ I_L ≤ –5 mA		1, 2, 3	–5	5	µA
I_Q	Minimum load current	V_I = 4.25 V, Forced V_O = 1.4 V		1, 2, 3	–3	–0.2	mA
		V_I = 14.25 V, Forced V_O = 1.4 V		1, 2, 3	–3	–0.2	
		V_I = 41.25 V, Forced V_O = 1.4 V		1, 2, 3	–5	–0.2	
I_{OS}	Output short circuit current	V_I = 4.25 V		1, 2, 3	–3.5	–1.5	A
		V_I = 40 V		1, 2, 3	–1	–0.18	

Copyright © 2021 Texas Instruments Incorporated

7.7 Electrical Characteristics: 1.5–A I_{OUT} Devices (LM117K) (continued)

Over operating temperature range (T = –55°C to 125°C) unless otherwise noted.

PARAMETER		TEST CONDITIONS (1)		SUBGROUP(2)	MIN	MAX	UNIT
V_O (Recov)	Output voltage recovery	V_I = 4.25 V, R_L = 0.833 Ω, C_L = 20 µF		1, 2, 3	1.2	1.3	V
			25°C Post-radiation	1		1.35	
		V_I = 40 V, R_L = 250 Ω		1, 2, 3	1.2	1.3	
			25°C Post-radiation	1		1.35	
V_{Start}	Voltage start-up	V_I = 4.25 V, R_L = 0.833 Ω, C_L = 20 µF, I_L = –1.5 A		1, 2, 3	1.2	1.3	V
V_{NO}	Output noise voltage	V_I = 6.25 V, I_L = –100 mA	25°C	7		120	μV_{RMS}
ΔV_O / ΔV_I	Line transient response	V_I = 6.25 V, ΔV_I = 3 V, I_L = –10 mA	25°C	7		18	mV
ΔV_O / ΔI_L	Load transient response	V_I = 6.25 V, ΔI_L = –400 mA, I_L = –100 mA	25°C	7		120	mV
ΔV_I / ΔV_O	Ripple rejection	V_I = 6.25 V, I_L = –500 mA, E_I = 1 V_{RMS} at f = 2400 Hz	25°C	4	65		dB
			25°C Post-radiation	4	60		

(1) Pre- and post-irradiation limits are identical for the parameters above unless specified by the test conditions.

(2) For subgroup definitions, see Quality Conformance Inspection table.

7.8 Parameter Drift: 1.5–A I_{OUT} Devices (LM117K)

The following deltas are for Group C (Life Test). Data is measured at 25°C.

PARAMETER		TEST CONDITIONS	SUBGROUP (1)	MIN	MAX	UNIT
V_O	Output voltage	V_I = 4.25 V, I_L = –5 mA	1	–0.01	0.01	V
		V_I = 4.25 V, I_L = –1.5 A	1	–0.01	0.01	
		V_I = 41.25 V, I_L = –5 mA	1	–0.01	0.01	
		V_I = 41.25 V, I_L = –200 mA	1	–0.01	0.01	
V_{RLine}	Line regulation	4.25 V ≤ V_I ≤ 41.25 V, I_L = –5 mA	1	–4.0	4.0	mV
I_{Adj}	Adjust pin current	V_I = 4.25 V, I_L = –5 mA	1	–10	10	µA
		V_I = 41.25 V, I_L = –5 mA	1	–10	10	
V_O (Recov)	Output voltage recovery	V_I = 4.25 V, R_L = 0.833 Ω, C_L = 20 µF	1	–0.01	0.01	V
		V_I = 40 V, R_L = 250 Ω	1	–0.01	0.01	

(1) For subgroup definitions, see Quality Conformance Inspection table.

Copyright © 2021 Texas Instruments Incorporated

7.9 Quality Conformance Inspection

MIL-STD-883, Method 5005 - Group A

SUBGROUP	DESCRIPTION	TEMP (°C)
1	Static tests at	+25
2	Static tests at	+125
3	Static tests at	–55
4	Dynamic tests at	+25
5	Dynamic tests at	+125
6	Dynamic tests at	–55
7	Functional tests at	+25
8A	Functional tests at	+125
8B	Functional tests at	–55
9	Switching tests at	+25
10	Switching tests at	+125
11	Switching tests at	–55

Copyright © 2021 Texas Instruments Incorporated

7.10 Typical Characteristics

Output capacitor = 0 µF unless otherwise noted

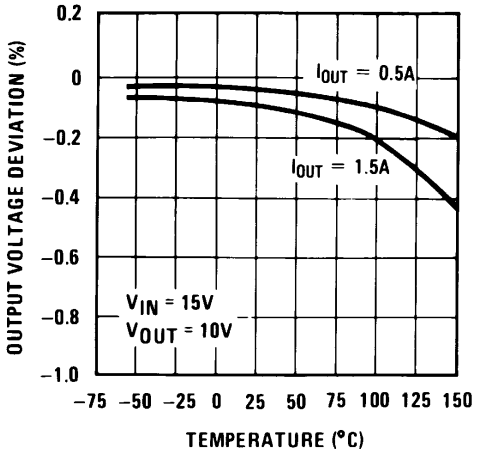

Figure 7-1. Load Regulation

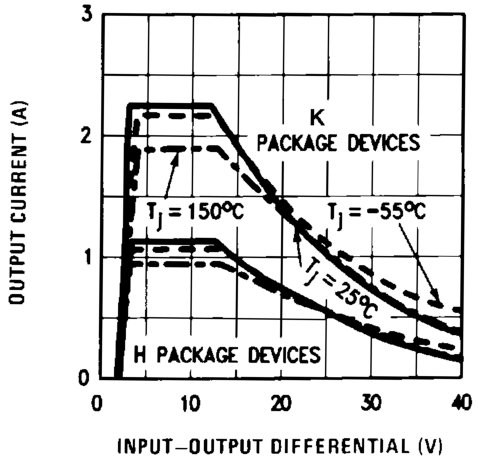

Figure 7-2. Current Limit

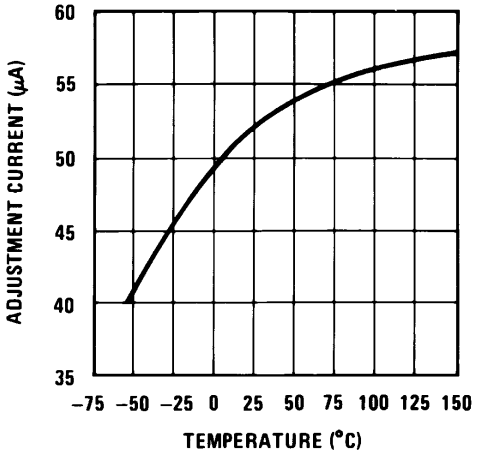

Figure 7-3. Adjustment Current

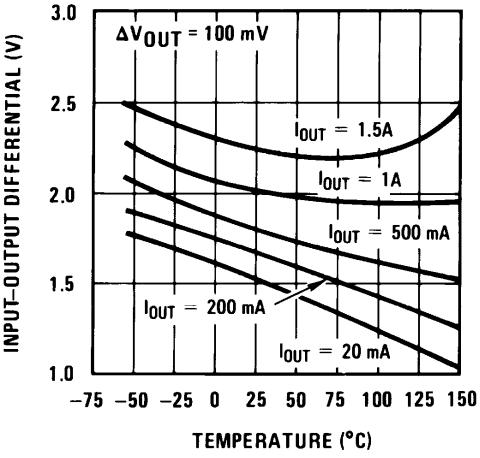

Figure 7-4. Dropout Voltage

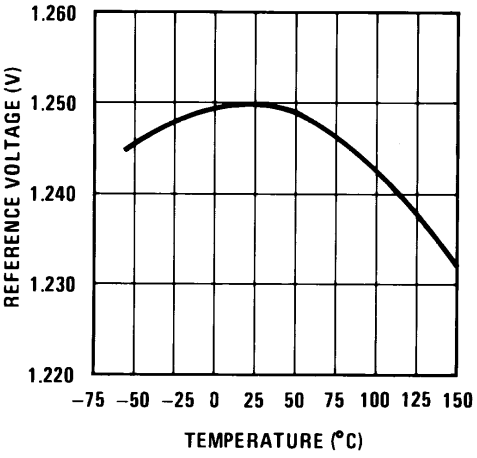

Figure 7-5. Temperature Stability

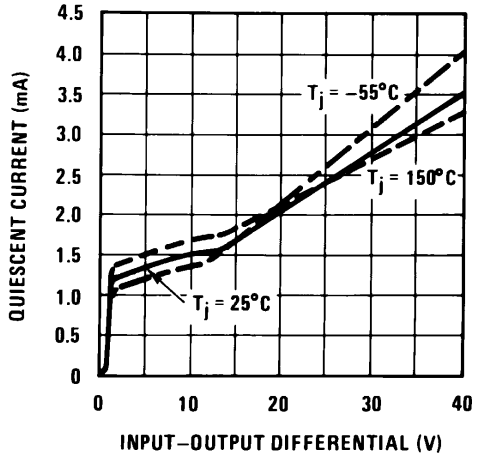

Figure 7-6. Minimum Operating Current

7.10 Typical Characteristics (continued)

Output capacitor = 0 µF unless otherwise noted

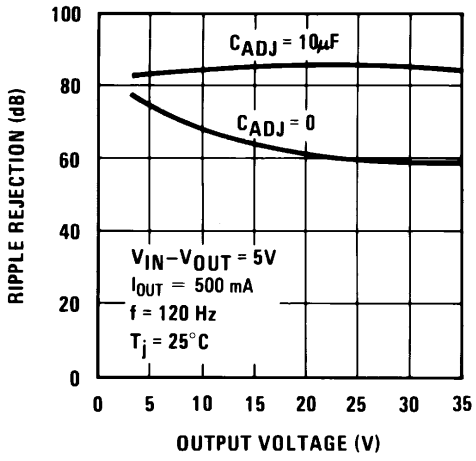

Figure 7-7. Ripple Rejection

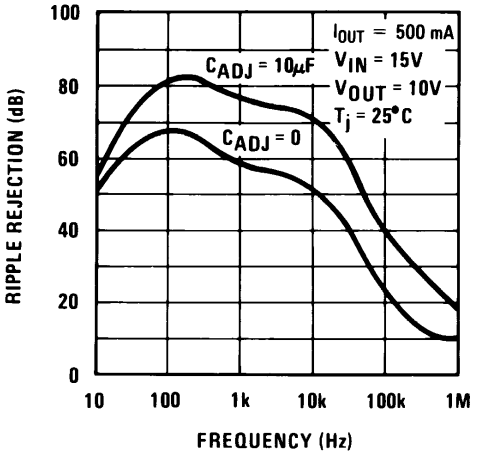

Figure 7-8. Ripple Rejection

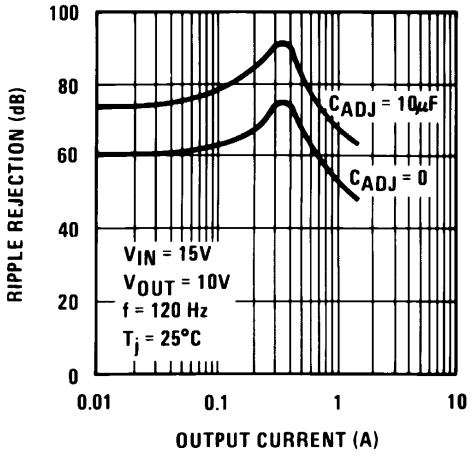

Figure 7-9. Ripple Rejection

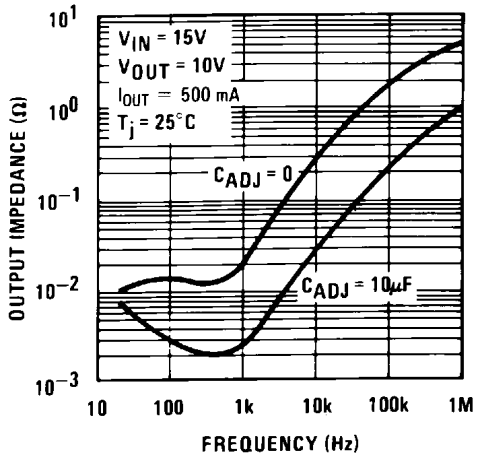

Figure 7-10. Output Impedance

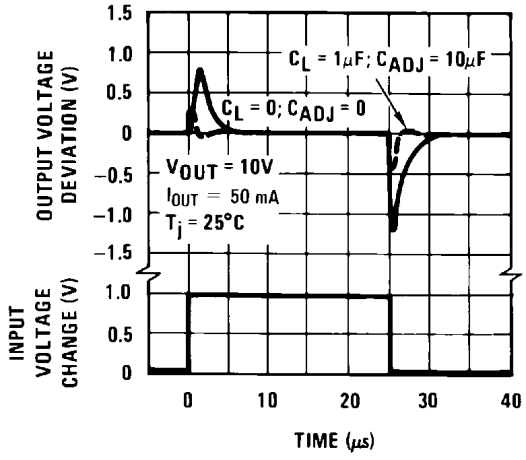

Figure 7-11. Line Transient Response

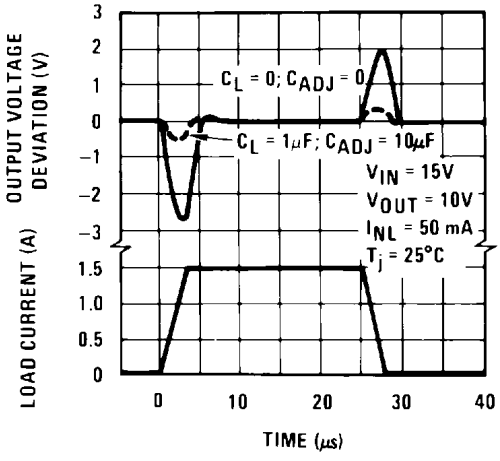

Figure 7-12. Load Transient Response

Copyright © 2021 Texas Instruments Incorporated

8 Detailed Description

8.1 Overview

The LM117QML-SP 3-terminal positive voltage linear regulator is capable of supplying either 0.5 A or 1.5 A over a 1.2-V to 37-V output range. It is simple to use and requires only two external resistors to set the output voltage. Further, both line and load regulation are better than standard fixed regulators.

The regulator is "floating" and sees only the input-to-output differential voltage, thus enabling supplies of several hundred volts to be regulated as long as the maximum input-to-output differential is not exceeded (i.e. don't short circuit the output).

The LM117QML-SP offers full overload protection such as current limit, thermal overload protection, and safe area protection. All overload protection circuitry remains fully functional even if the adjustment terminal is disconnected.

Typically, no capacitors are needed unless the device is situated more than 6 in from the input filter capacitors in which case an input bypass is needed. An optional output capacitor can be added to improve transient response. The adjustment terminal can be bypassed to achieve very high ripple rejection ratios which are difficult to achieve with standard 3-terminal regulators.

This device makes an especially simple adjustable switching regulator, a programmable output regulator, or by connecting a fixed resistor between the adjustment pin and output it can be used as a precision current regulator. Supplies with electronic shutdown can be achieved by clamping the adjustment terminal to ground which programs the output to 1.2 V where most loads draw little current.

8.2 Functional Block Diagram

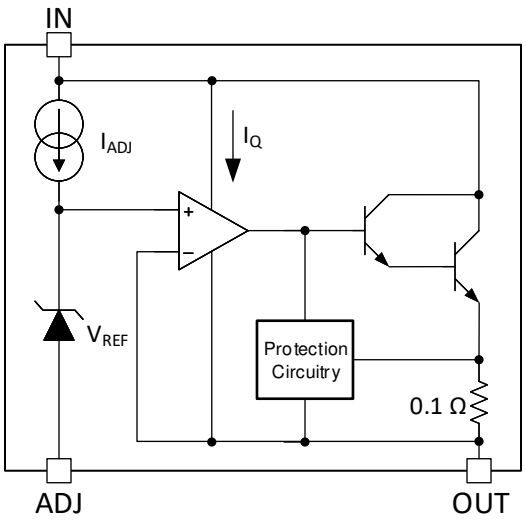

Figure 8-1. Functional Block Diagram

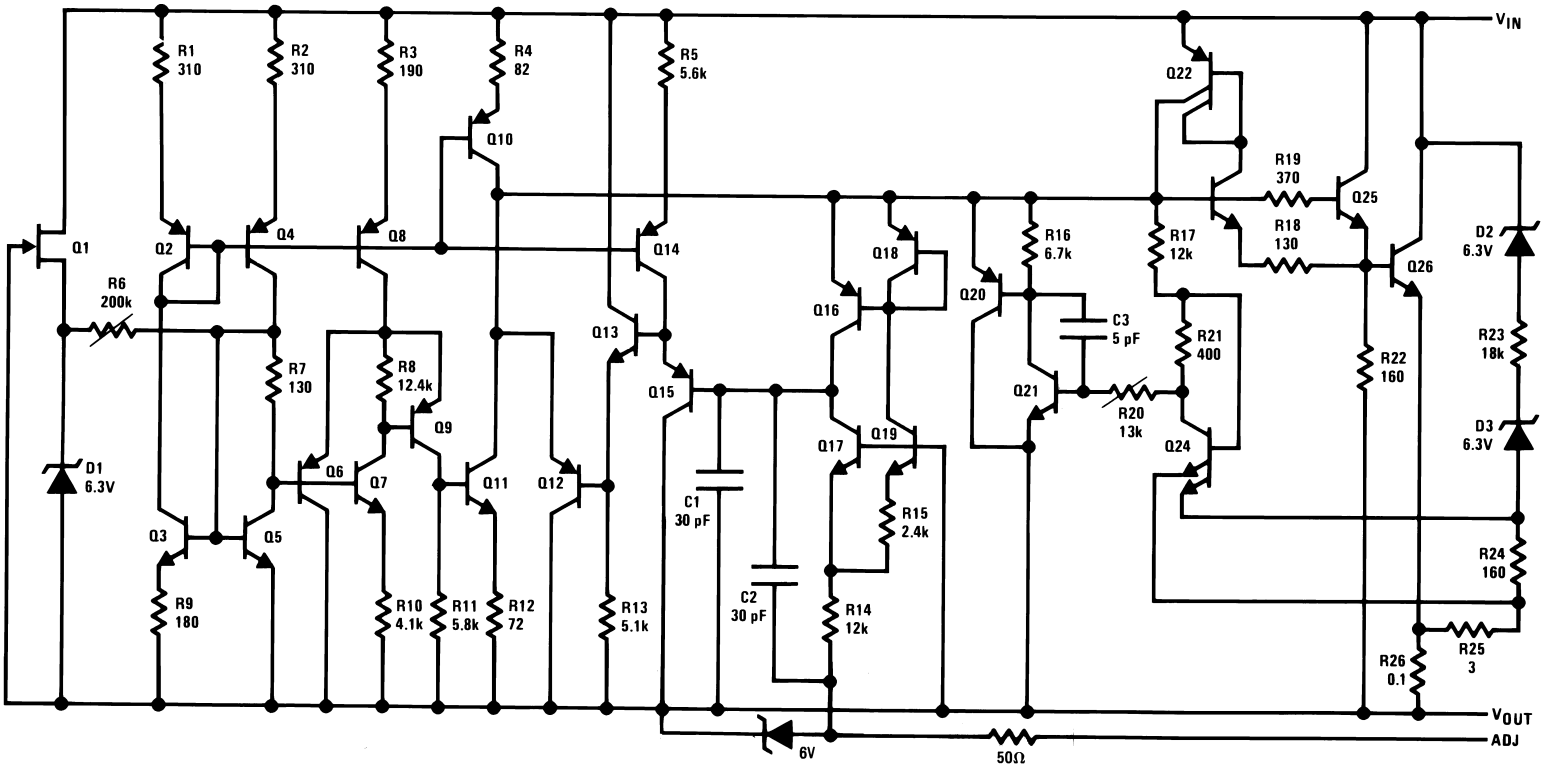

Figure 8-2. Simplified Device Schematic

8.3 Setting Output Voltage

In operation, the LM117 develops a nominal 1.25-V reference voltage, V_{REF}, between the output and adjustment terminal. The reference voltage is expressed across R1 and, since the voltage is constant, a constant current I_1 then flows through R2, giving an output voltage found by using Equation 1.

$$V_{OUT} = V_{REF}\left(1 + \frac{R2}{R1}\right) + I_{ADJ}R2 \tag{1}$$

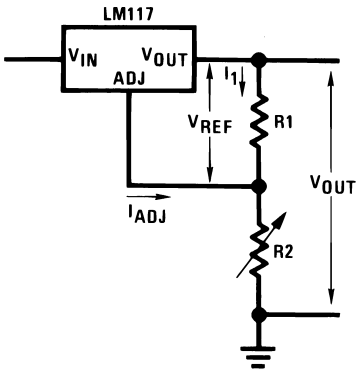

Since the 100-µA current from the adjustment terminal represents an error term, the LM117 was designed to minimize I_{ADJ} and make it relatively constant with line and load changes. To do this, all quiescent operating current is returned to the output establishing a minimum load current requirement. If there is insufficient load on the output, the output will rise.

To mitigate the requirement for an added load to sink the required output current, the resistor divider may be selected so that it alone can sink the largest specified output load current of 5 mA. This has the additional benefit of minimizing the I_{ADJ} error term (which varies over temperature).

Copyright © 2021 Texas Instruments Incorporated

8.4 External Capacitors

An input bypass capacitor is recommended. A 0.1-µF ceramic disc or 1-µF solid tantalum on the input is suitable input bypassing for almost all applications. The device is more sensitive to the absence of input bypassing when adjustment or output capacitors are used but the above values will minimize the possibility of problems.

The adjustment terminal can be bypassed to ground on the LM117 to improve ripple rejection. This bypass capacitor prevents ripple from being amplified as the output voltage is increased. With a 10-µF bypass capacitor 80-dB ripple rejection is obtainable at any output level. Increases over 10 µF do not appreciably improve the ripple rejection at frequencies above 120 Hz. If the bypass capacitor is used, it is sometimes necessary to include protection diodes to prevent the capacitor from discharging through internal low current paths and damaging the device (see Section 8.6).

In general, the best type of capacitors to use are solid tantalum. Solid tantalum capacitors have low impedance even at high frequencies. Depending upon capacitor construction, it takes about 25 µF in aluminum electrolytic to equal 1-µF solid tantalum at high frequencies. Ceramic capacitors are also good at high frequencies; but some types have a large decrease in capacitance at frequencies around 0.5 MHz. For this reason, 0.01-µF disc may seem to work better than a 0.1-µF disc as a bypass.

Although the LM117 is stable with no output capacitors, like any feedback circuit, certain values of external capacitance can cause excessive ringing. This occurs with values between 500 pF and 5000 pF. A 1-µF solid tantalum (or 25-µF aluminum electrolytic) on the output swamps this effect and insures stability. Any increase of the load capacitance larger than 10 µF will merely improve the loop stability and output impedance.

8.5 Load Regulation

The LM117 is capable of providing extremely good load regulation but a few precautions are needed to obtain maximum performance. The current set resistor connected between the adjustment terminal and the output terminal (usually 240 Ω) should be tied directly to the output (case) of the regulator rather than near the load. This eliminates line drops from appearing effectively in series with the reference and degrading regulation. For example, a 15-V regulator with 0.05-Ω resistance between the regulator and load will have a load regulation due to line resistance of 0.05 Ω × I_L. If the set resistor is connected near the load the effective line resistance will be 0.05 Ω (1 + R2 / R1) or in this case, 11.5 times worse.

Figure 8-3 shows the effect of resistance between the regulator and 240-Ω set resistor.

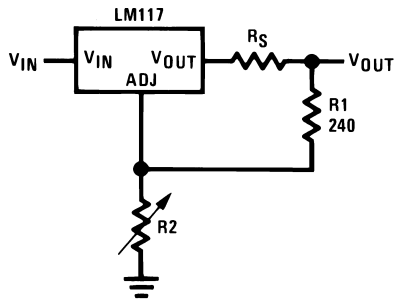

Figure 8-3. Regulator With Line Resistance in Output Lead

With the TO-3 package, it is easy to minimize the resistance from the case to the set resistor, by using two separate leads to the case. However, with the TO-39 package, care should be taken to minimize the wire length of the output lead. The ground of R2 can be returned near the ground of the load to provide remote ground sensing and improve load regulation.

8.6 Protection Diodes

When external capacitors are used with an IC regulator, it is sometimes necessary to add protection diodes to prevent the capacitors from discharging through low current points into the regulator. Most 10-µF capacitors have low enough internal series resistance to deliver 20-A spikes when shorted. Although the surge is short, there is enough energy to damage parts of the IC.

Copyright © 2021 Texas Instruments Incorporated

When an output capacitor is connected to a regulator and the input is shorted, the output capacitor will discharge into the output of the regulator. The discharge current depends on the value of the capacitor, the output voltage of the regulator, and the rate of decrease of V_{IN}. In the LM117, this discharge path is through a large junction that is able to sustain 15-A surge. This is not true of all types of positive regulators. For output capacitors of 25 µF or less, there is generally no need to use diodes.

The bypass capacitor on the adjustment terminal can discharge through a low current junction. Discharge occurs when *either* the input or output is shorted. Internal to the LM117 is a 50-Ω resistor which limits the peak discharge current. No protection is needed for output voltages of 25 V or less and 10-µF capacitance. Figure 8-4 shows an LM117 with protection diodes included for use with outputs greater than 25 V and high values of output capacitance.

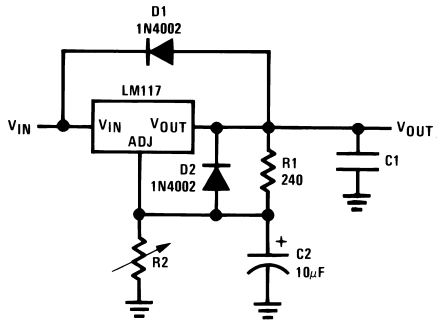

D1 protects against C1 (such as due to a VIN short)
D2 protects against C2 (such as due to a VOUT short)

Figure 8-4. Regulator With Protection Diodes

Copyright © 2021 Texas Instruments Incorporated

9 Application and Implementation

Note

Information in the following applications sections is not part of the TI component specification, and TI does not warrant its accuracy or completeness. TI's customers are responsible for determining suitability of components for their purposes, as well as validating and testing their design implementation to confirm system functionality.

9.1 Typical Applications

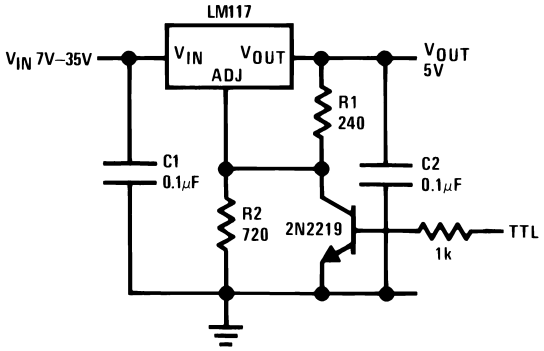

*Min. output ≅ 1.2 V

Figure 9-1. 5-V Logic Regulator With Electronic Shutdown*

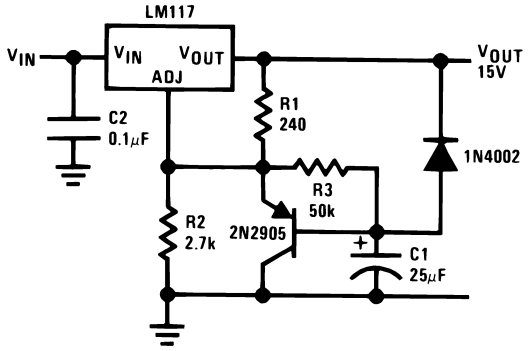

Figure 9-2. Slow Turn-On 15-V Regulator

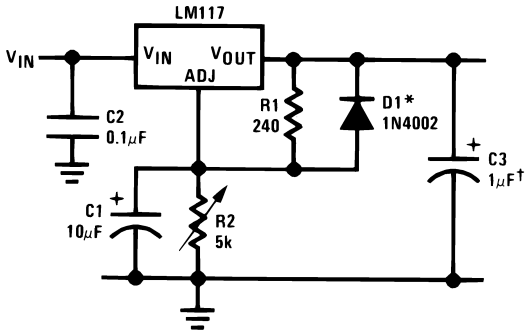

†Solid tantalum

*Discharges C1 if output is shorted to ground

Figure 9-3. Adjustable Regulator With Improved Ripple Rejection

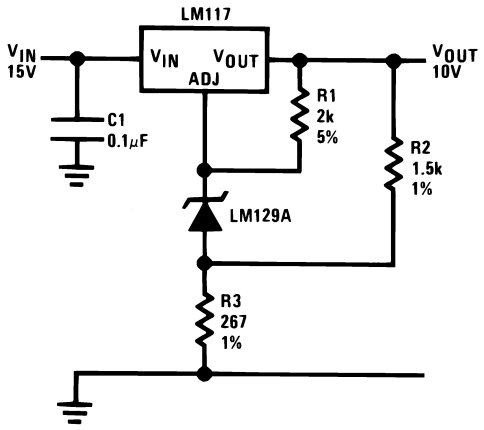

Figure 9-4. High Stability 10-V Regulator

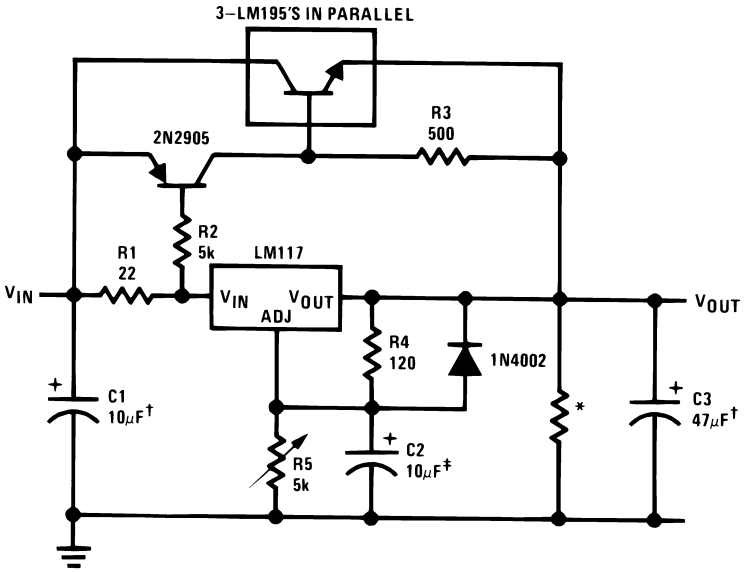

‡Optional, improves ripple rejection

†Solid tantalum

*Minimum load current = 30 mA

Figure 9-5. High Current Adjustable Regulator

Copyright © 2021 Texas Instruments Incorporated

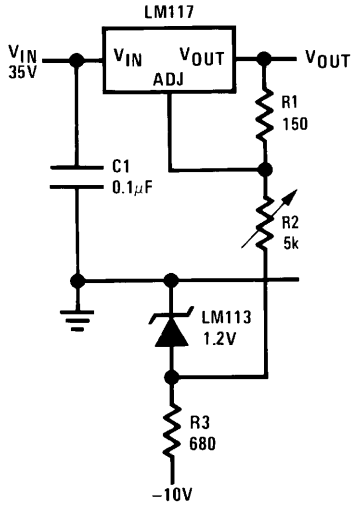

Full output current not available at high input-output voltages

Figure 9-6. 0-V to 30-V Regulator

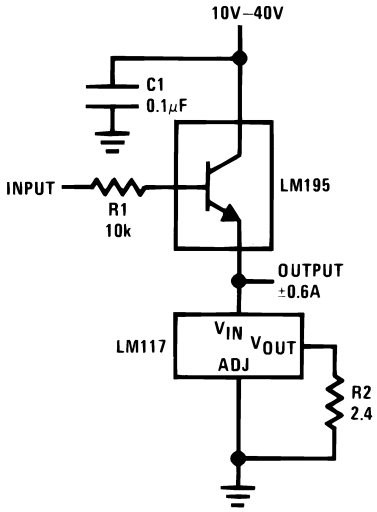

Figure 9-7. Power Follower

Copyright © 2021 Texas Instruments Incorporated

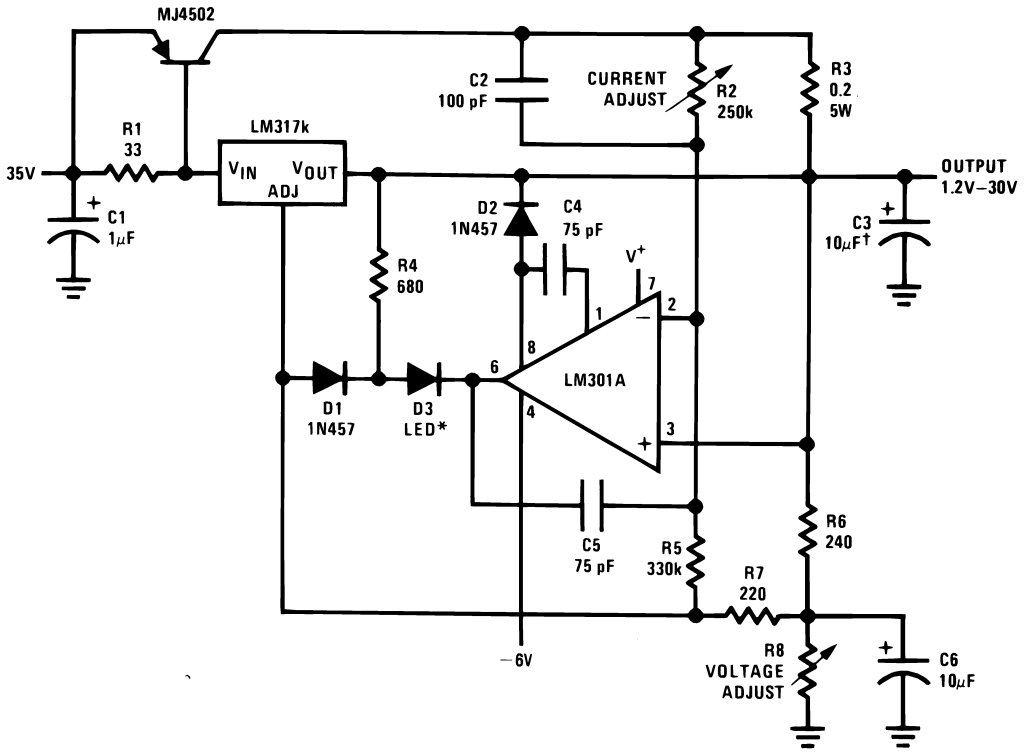

†Solid tantalum

*Lights in constant current mode

Figure 9-8. 5-A Constant Voltage/Constant Current Regulator

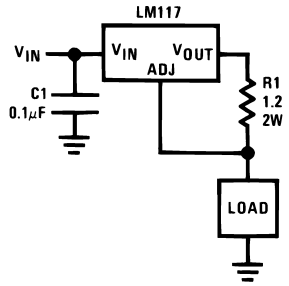

Figure 9-9. 1-A Current Regulator

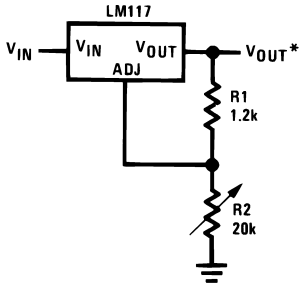

*Specified load current requirement ≅ 5 mA

Figure 9-10. 1.2-V to 20-V Regulator With Minimum Program Current

Copyright © 2021 Texas Instruments Incorporated

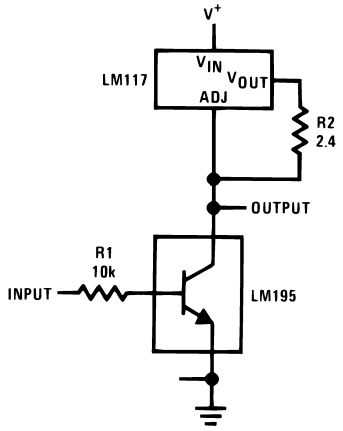

Figure 9-11. High Gain Amplifier

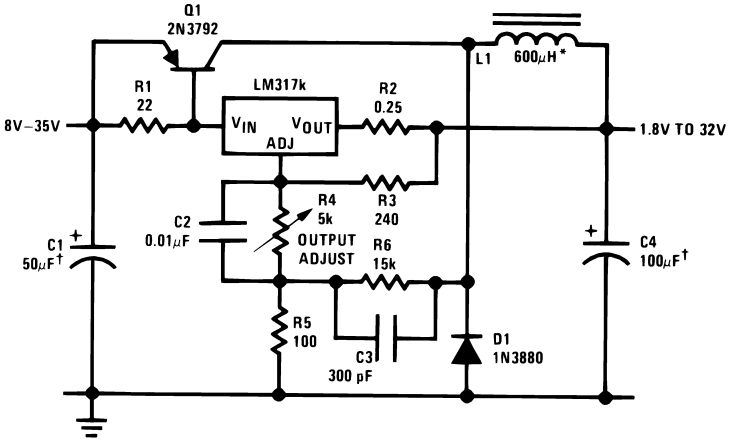

†Solid tantalum

*Core—Arnold A-254168-2 60 turns

Figure 9-12. Low Cost 3-A Switching Regulator

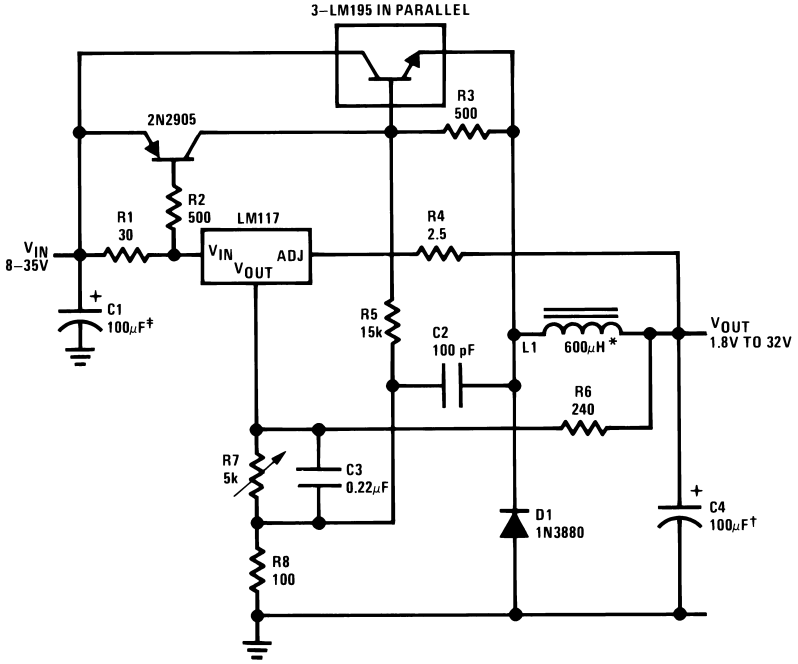

†Solid tantalum

*Core—Arnold A-254168-2 60 turns

Figure 9-13. 4-A Switching Regulator With Overload Protection

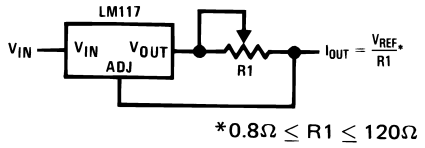

Figure 9-14. Precision Current Limiter

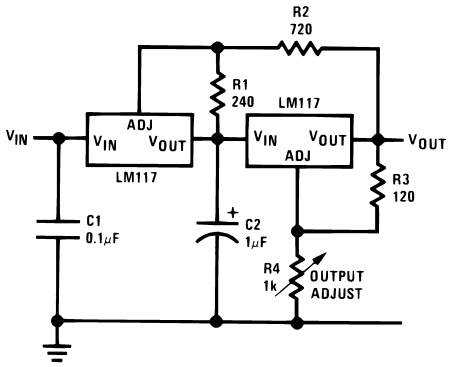

Figure 9-15. Tracking Preregulator

Copyright © 2021 Texas Instruments Incorporated

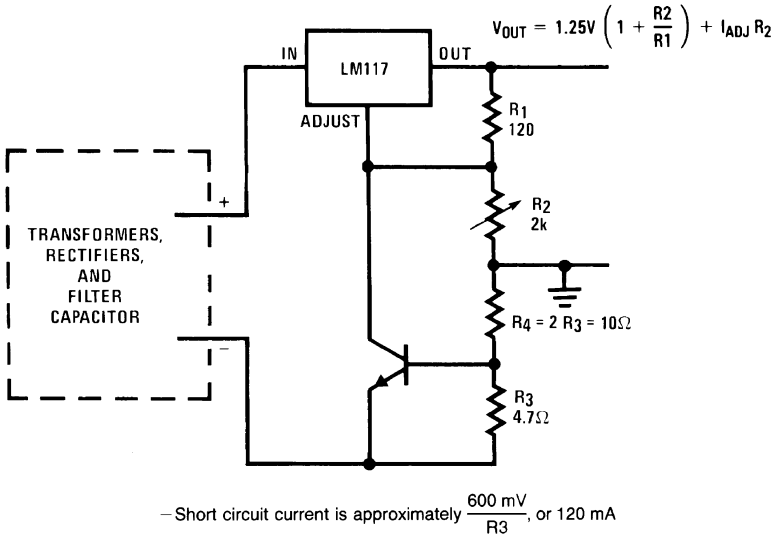

(Compared to LM117's higher current limit)

—At 50 mA output only ¾ volt of drop occurs in R_3 and R_4

Figure 9-16. Current Limited Voltage Regulator

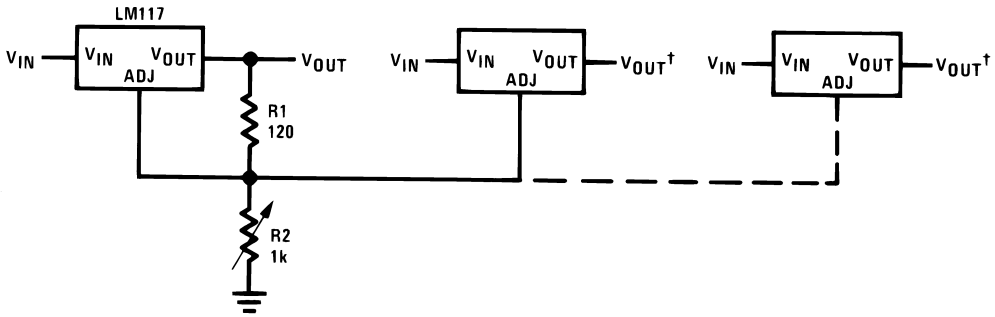

*All outputs within ±100 mV

†Minimum load = 10 mA

Figure 9-17. Adjusting Multiple On-Card Regulators With Single Control*

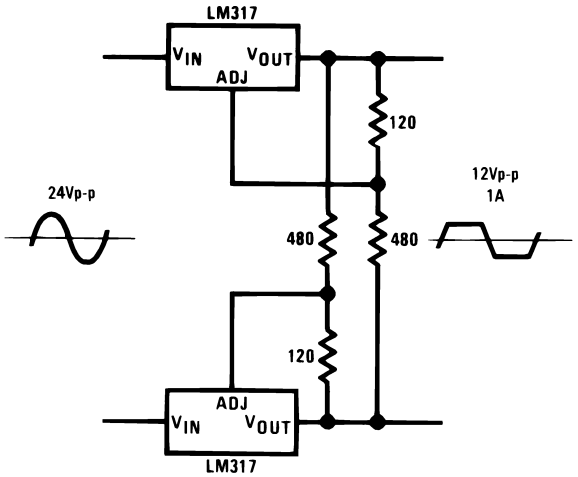

Figure 9-18. AC Voltage Regulator

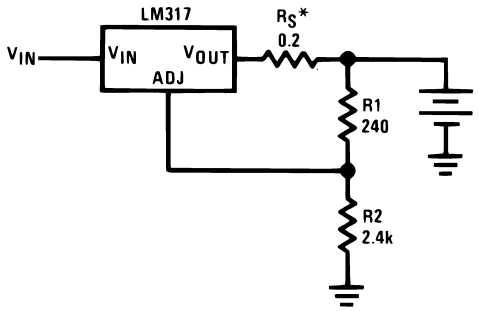

*R_S—sets output impedance of charger: $Z_{OUT} = R_S \left(1 + \frac{R2}{R1}\right)$

Use of R_S allows low charging rates with fully charged battery.

Figure 9-19. 12-V Battery Charger

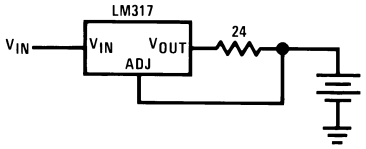

Figure 9-20. 50-mA Constant Current Battery Charger

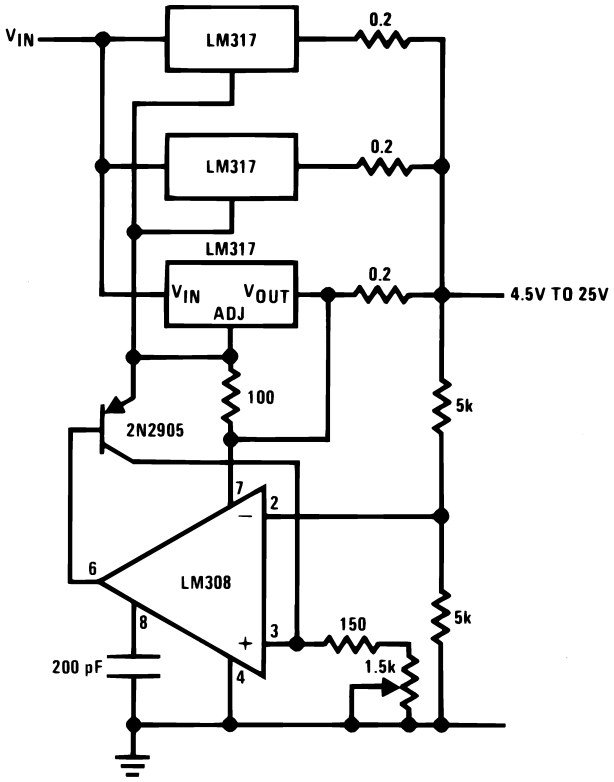

Figure 9-21. Adjustable 4-A Regulator

Copyright © 2021 Texas Instruments Incorporated

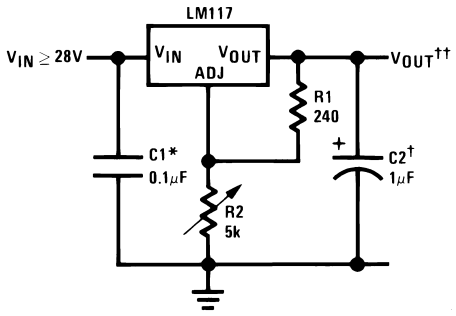

Full output current not available at high input-output voltages

*Needed if device is more than 6 in from filter capacitors.

†Optional, improves transient response. Output capacitors in the range of 1 μF to 1000 μF of aluminum or tantalum electrolytic are commonly used to provide improved output impedance and rejection of transients.

$$\dagger\dagger V_{OUT} = 1.25V \left(1 + \frac{R2}{R1}\right) + I_{ADJ}(R_2)$$

Figure 9-22. 1.2-V to 25-V Adjustable Regulator

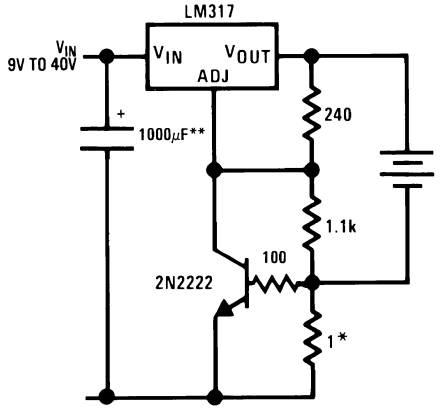

*Sets peak current (0.6 A for 1 Ω)

**The 1000 μF is recommended to filter out input transients

Figure 9-23. Current Limited 6-V Charger

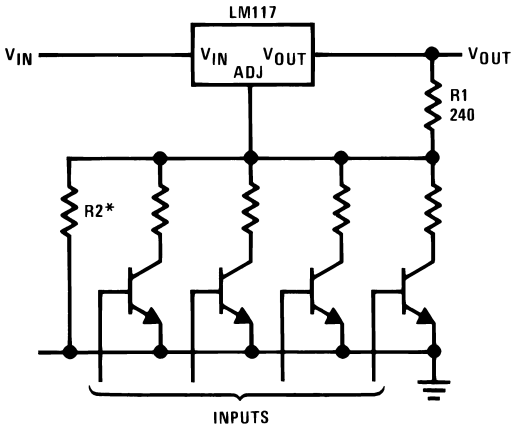

*Sets maximum V_{OUT}

Figure 9-24. Digitally Selected Outputs

10 Power Supply Recommendations

The input supply to the LM117QML-SP must be kept at a voltage level such that its maximum input to output differential voltage is not exceeded. The minimum dropout voltage must also be met with extra headroom when possible to keep the LM117QML-SP in regulation. An input capacitor is recommended, especially when the input pin is located more than 6 in away from the power supply source. For more information regarding capacitor selection, refer to External Capacitors.

Copyright © 2021 Texas Instruments Incorporated

11 Layout

11.1 Layout Guidelines

Ensure wide enough traces for those carrying the load current in order to reduce the amount of parasitic trace inductance. Keep the feedback loop from VOUT to ADJ as short as possible. To improve PSRR, a bypass capacitor can be placed at the ADJ pin and must be located as close as possible to the IC. In cases when VIN shorts to ground, an external diode must be placed from VOUT to VIN to divert the surge current from the output capacitor and protect the IC. Similarly, in cases when a large bypass capacitor is placed at the ADJ pin and VOUT shorts to ground, an external diode must be placed from ADJ to VOUT to provide a path for the bypass capacitor to discharge. These diodes must be placed close to the corresponding LM117QML-SP pins to increase their effectiveness.

Copyright © 2021 Texas Instruments Incorporated

12 Device and Documentation Support

12.1 Device Support

12.1.1 Third-Party Products Disclaimer

TI'S PUBLICATION OF INFORMATION REGARDING THIRD-PARTY PRODUCTS OR SERVICES DOES NOT CONSTITUTE AN ENDORSEMENT REGARDING THE SUITABILITY OF SUCH PRODUCTS OR SERVICES OR A WARRANTY, REPRESENTATION OR ENDORSEMENT OF SUCH PRODUCTS OR SERVICES, EITHER ALONE OR IN COMBINATION WITH ANY TI PRODUCT OR SERVICE.

12.2 Documentation Support

12.2.1 Related Documentation

For related documentation see the following:

1. LM117xRLQMLV ELDRS Report
2. LM117QML-SP SMD 5962R9951707VZA
3. High Reliability Part Numbering System
4. Applications for an Adjustable IC Power Regulator
5. Improving Power Supply Reliability with IC Power Regulators
6. A New Production Technique for Trimming Voltage Regulators
7. LDO basics: capacitor vs. capacitance
8. LDO Basics: Preventing reverse current

12.3 Receiving Notification of Documentation Updates

To receive notification of documentation updates, navigate to the device product folder on ti.com. Click on *Subscribe to updates* to register and receive a weekly digest of any product information that has changed. For change details, review the revision history included in any revised document.

12.4 Support Resources

TI E2E™ support forums are an engineer's go-to source for fast, verified answers and design help — straight from the experts. Search existing answers or ask your own question to get the quick design help you need.

Linked content is provided "AS IS" by the respective contributors. They do not constitute TI specifications and do not necessarily reflect TI's views; see TI's Terms of Use.

12.5 Trademarks

TI E2E™ is a trademark of Texas Instruments.
All trademarks are the property of their respective owners.

12.6 Electrostatic Discharge Caution



This integrated circuit can be damaged by ESD. Texas Instruments recommends that all integrated circuits be handled with appropriate precautions. Failure to observe proper handling and installation procedures can cause damage.

ESD damage can range from subtle performance degradation to complete device failure. Precision integrated circuits may be more susceptible to damage because very small parametric changes could cause the device not to meet its published specifications.

12.7 Glossary

TI Glossary	This glossary lists and explains terms, acronyms, and definitions.

Copyright © 2021 Texas Instruments Incorporated

PACKAGING INFORMATION

Orderable part number	Status (1)	Material type (2)	Package | Pins	Package qty | Carrier	RoHS (3)	Lead finish/ Ball material (4)	MSL rating/ Peak reflow (5)	Op temp (°C)	Part marking (6)
5962R9951703V9A	Active	Production	DIESALE (Y) | 0	42 | NOT REQUIRED	Yes	Call TI	Level-1-NA-UNLIM	-55 to 125	
5962R9951703VXA	Active	Production	TO (NDT) | 3	20 | JEDEC TRAY (5+1)	-	Call TI	Call TI	-55 to 125	LM117HRQMLV 5962R9951703VXA Q ACO 5962R9951703VXA Q >T
5962R9951704VYA	Active	Production	TO (K) | 2	50 | JEDEC TRAY (5+1)	Yes	Call TI	Level-1-NA-UNLIM	-55 to 125	LM117KRQMLV 5962R99517 04VYA Q ACO 04VYA Q >T
5962R9951705V9A	Active	Production	DIESALE (Y) | 0	42 | NOT REQUIRED	Yes	Call TI	Level-1-NA-UNLIM	-55 to 125	
5962R9951705VXA	Active	Production	TO (NDT) | 3	20 | JEDEC TRAY (5+1)	-	Call TI	Call TI	-55 to 125	LM117HRLQMLV 5962R9951705VXA Q ACO 5962R9951705VXA Q >T
5962R9951706VZA	Active	Production	CFP (NAC) | 16	88 | JEDEC TRAY (5+1)	No	SNPB	Level-1-NA-UNLIM	-55 to 125	LM117GWR QMLV Q 5962R99517 06VZA ACO 06VZA >T
5962R9951707VZA	Active	Production	CFP (NAC) | 16	88 | JEDEC TRAY (5+1)	No	SNPB	Level-1-NA-UNLIM	-55 to 125	LM117GWRL QMLV Q 5962R99517 07VZA ACO 07VZA >T
LM117GWRLQMLV	Active	Production	CFP (NAC) | 16	88 | JEDEC TRAY (5+1)	No	SNPB	Level-1-NA-UNLIM	-55 to 125	LM117GWRL QMLV Q 5962R99517 07VZA ACO 07VZA >T
LM117GWRQMLV	Active	Production	CFP (NAC) | 16	88 | JEDEC TRAY (5+1)	No	SNPB	Level-1-NA-UNLIM	-55 to 125	LM117GWR QMLV Q 5962R99517 06VZA ACO 06VZA >T

Orderable part number	Status (1)	Material type (2)	Package | Pins	Package qty | Carrier	RoHS (3)	Lead finish/ Ball material (4)	MSL rating/ Peak reflow (5)	Op temp (°C)	Part marking (6)
LM117GWRQMLV.A	Active	Production	CFP (NAC) | 16	88 | JEDEC TRAY (5+1)	No	SNPB	Level-1-NA-UNLIM	-55 to 125	LM117GWR QMLV Q 5962R99517 06VZA ACO 06VZA >T
LM117H MDE	Active	Production	DIESALE (Y) | 0	42 | NOT REQUIRED	Yes	Call TI	Level-1-NA-UNLIM	-55 to 125	
LM117H MDR	Active	Production	DIESALE (Y) | 0	42 | NOT REQUIRED	Yes	Call TI	Level-1-NA-UNLIM	-55 to 125	
LM117H-MDR.A	Active	Production	DIESALE (Y) | 0	42 | NOT REQUIRED	Yes	Call TI	Level-1-NA-UNLIM	-55 to 125	
LM117HRLQMLV	Active	Production	TO (NDT) | 3	20 | JEDEC TRAY (5+1)	No	Call TI	Level-1-NA-UNLIM	-55 to 125	LM117HRLQMLV 5962R9951705VXA Q ACO 5962R9951705VXA Q >T
LM117HRQMLV	Active	Production	TO (NDT) | 3	20 | JEDEC TRAY (5+1)	No	Call TI	Level-1-NA-UNLIM	-55 to 125	LM117HRQMLV 5962R9951703VXA Q ACO 5962R9951703VXA Q >T
LM117HRQMLV.A	Active	Production	TO (NDT) | 3	20 | JEDEC TRAY (5+1)	-	Call TI	Call TI	-55 to 125	LM117HRQMLV 5962R9951703VXA Q ACO 5962R9951703VXA Q >T
LM117K/EM	Active	Production	TO (K) | 2	50 | JEDEC TRAY (5+1)	Yes	Call TI	Level-1-NA-UNLIM	25 to 25	LM117K/EM EVAL ONLY T
LM117KRQMLV	Active	Production	TO (K) | 2	50 | JEDEC TRAY (5+1)	No	Call TI	Level-1-NA-UNLIM	-55 to 125	LM117KRQMLV 5962R99517 04VYA Q ACO 04VYA Q >T
LM117KRQMLV.A	Active	Production	TO (K) | 2	50 | JEDEC TRAY (5+1)	Yes	Call TI	Level-1-NA-UNLIM	-55 to 125	LM117KRQMLV 5962R99517 04VYA Q ACO 04VYA Q >T
LM117NDT/EM	Active	Production	TO (NDT) | 3	20 | JEDEC TRAY (5+1)	-	Call TI	Call TI	25 to 25	LM117NDT/EM EVAL ONLY

(1) **Status:** For more details on status, see our product life cycle.

(2) **Material type:** When designated, preproduction parts are prototypes/experimental devices, and are not yet approved or released for full production. Testing and final process, including without limitation quality assurance, reliability performance testing, and/or process qualification, may not yet be complete, and this item is subject to further changes or possible discontinuation. If available for ordering, purchases will be subject to an additional waiver at checkout, and are intended for early internal evaluation purposes only. These items are sold without warranties of any kind.

(3) **RoHS values:** Yes, No, RoHS Exempt. See the TI RoHS Statement for additional information and value definition.

(4) **Lead finish/Ball material:** Parts may have multiple material finish options. Finish options are separated by a vertical ruled line. Lead finish/Ball material values may wrap to two lines if the finish value exceeds the maximum column width.

(5) **MSL rating/Peak reflow:** The moisture sensitivity level ratings and peak solder (reflow) temperatures. In the event that a part has multiple moisture sensitivity ratings, only the lowest level per JEDEC standards is shown. Refer to the shipping label for the actual reflow temperature that will be used to mount the part to the printed circuit board.

(6) **Part marking:** There may be an additional marking, which relates to the logo, the lot trace code information, or the environmental category of the part.

Multiple part markings will be inside parentheses. Only one part marking contained in parentheses and separated by a "~" will appear on a part. If a line is indented then it is a continuation of the previous line and the two combined represent the entire part marking for that device.

Important Information and Disclaimer: The information provided on this page represents TI's knowledge and belief as of the date that it is provided. TI bases its knowledge and belief on information provided by third parties, and makes no representation or warranty as to the accuracy of such information. Efforts are underway to better integrate information from third parties. TI has taken and continues to take reasonable steps to provide representative and accurate information but may not have conducted destructive testing or chemical analysis on incoming materials and chemicals. TI and TI suppliers consider certain information to be proprietary, and thus CAS numbers and other limited information may not be available for release.

In no event shall TI's liability arising out of such information exceed the total purchase price of the TI part(s) at issue in this document sold by TI to Customer on an annual basis.

OTHER QUALIFIED VERSIONS OF LM117QML-SP :

- Military : LM117QML

NOTE: Qualified Version Definitions:

- Military - QML certified for Military and Defense Applications

TRAY

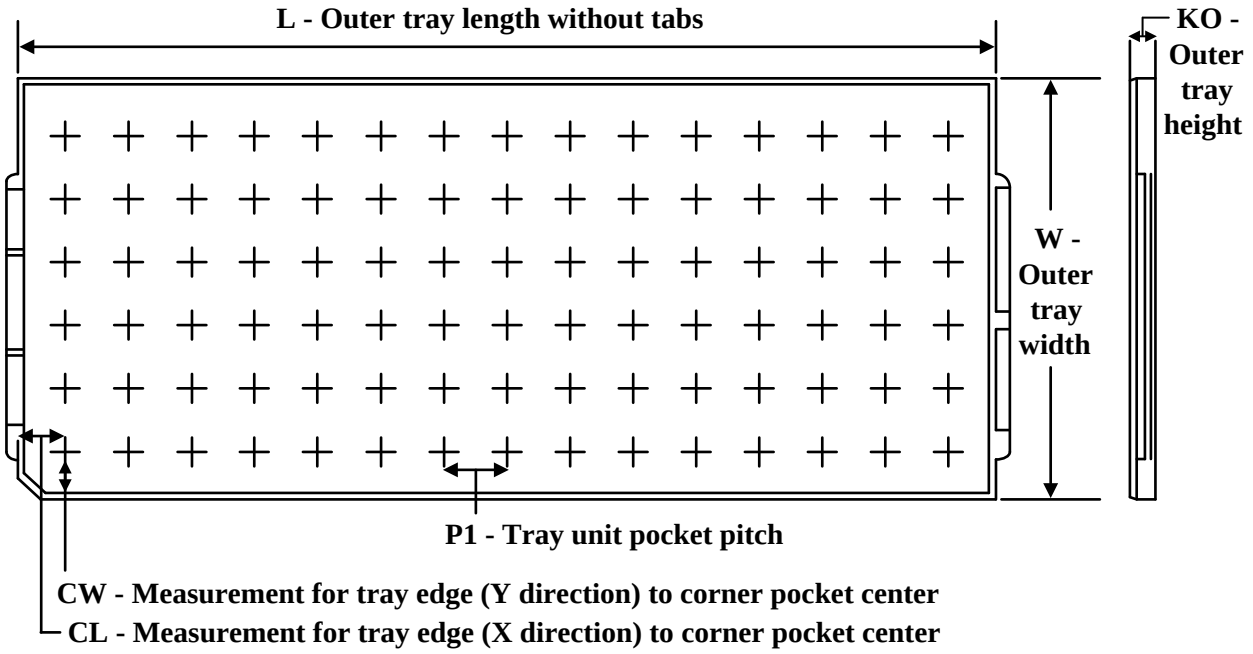

Chamfer on Tray corner indicates Pin 1 orientation of packed units.

*All dimensions are nominal

Device	Package Name	Package Type	Pins	SPQ	Unit array matrix	Max temperature (°C)	L (mm)	W (mm)	K0 (µm)	P1 (mm)	CL (mm)	CW (mm)
5962R9951703VXA	NDT	TO-CAN	3	20	2 X 10	150	126.49	61.98	8890	11.18	12.95	18.54
5962R9951704VYA	K	TO-CAN	2	50	9 X 6	NA	292.1	215.9	25654	3.87	22.3	25.4
5962R9951705VXA	NDT	TO-CAN	3	20	2 X 10	150	126.49	61.98	8890	11.18	12.95	18.54
LM117HRLQMLV	NDT	TO-CAN	3	20	2 X 10	150	126.49	61.98	8890	11.18	12.95	18.54
LM117HRQMLV	NDT	TO-CAN	3	20	2 X 10	150	126.49	61.98	8890	11.18	12.95	18.54
LM117HRQMLV.A	NDT	TO-CAN	3	20	2 X 10	150	126.49	61.98	8890	11.18	12.95	18.54
LM117K/EM	K	TO-CAN	2	50	9 X 6	NA	292.1	215.9	25654	3.87	22.3	25.4
LM117KRQMLV	K	TO-CAN	2	50	9 X 6	NA	292.1	215.9	25654	3.87	22.3	25.4
LM117KRQMLV.A	K	TO-CAN	2	50	9 X 6	NA	292.1	215.9	25654	3.87	22.3	25.4
LM117NDT/EM	NDT	TO-CAN	3	20	2 X 10	150	126.49	61.98	8890	11.18	12.95	18.54

K0002A



PACKAGE OUTLINE

TO-CAN - 7.747 mm max height

TRANSISTOR OUTLINE

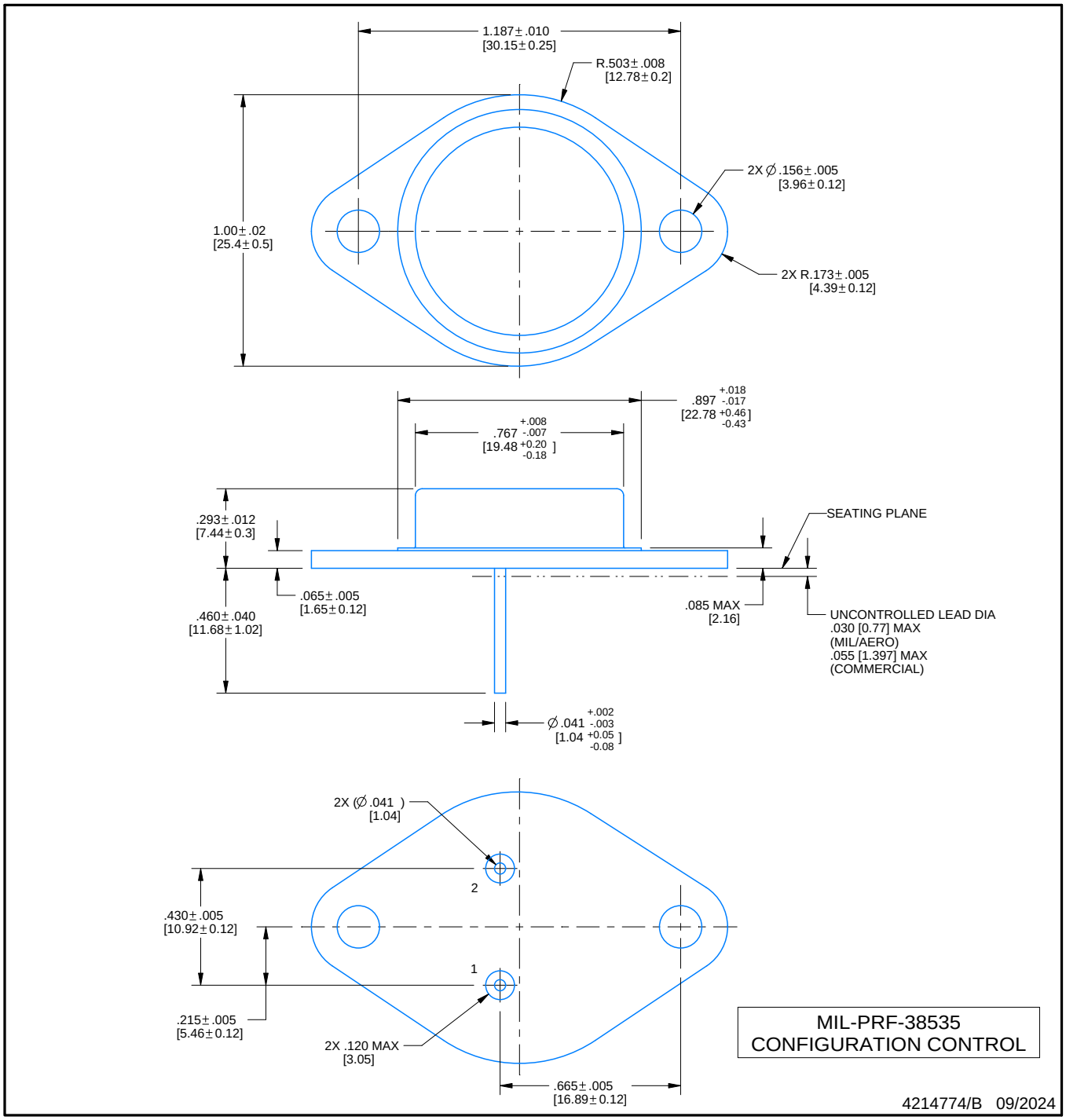

NOTES:

1. Linear dimensions are in inches [millimeters]. Dimensions in parenthesis are for reference only. Controlling dimensions are in inches. Dimensioning and tolerancing per ASME Y14.5M.
2. This drawing is subject to change without notice.
3. Leads not to be bent greater than 15°.

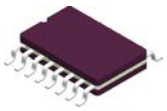

PACKAGE OUTLINE

NAC0016A

CFP - 2.33mm max height

CERAMIC FLATPACK

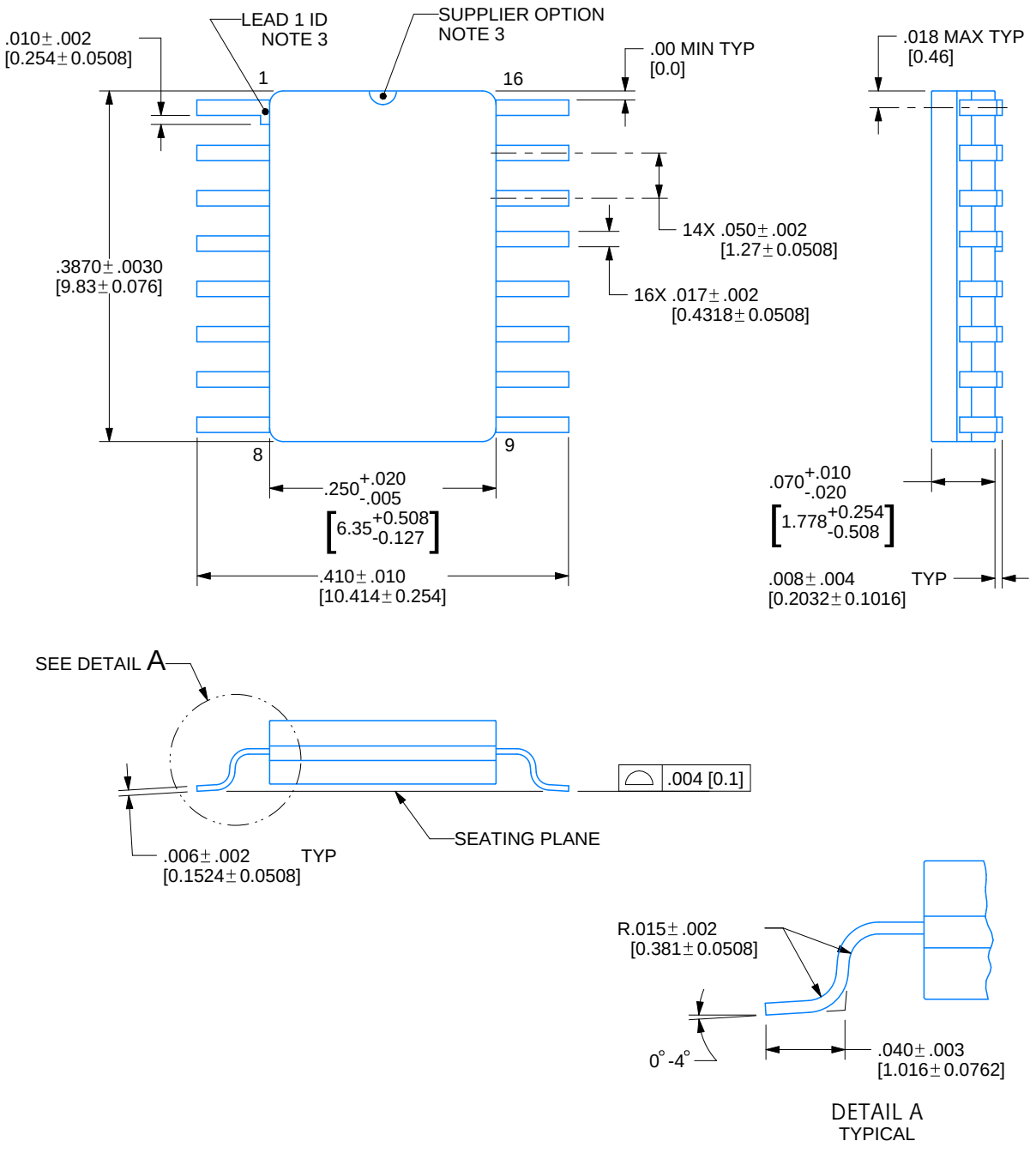

4215198/C 08/2022

NOTES:

1. Controlling dimension is Inch. Values in [ ] are milimeters. Dimensions in ( ) for reference only.
2. For solder thickness and composition, see the "Lead Finish Composition/Thickness" link in the packaging section of the Texas Instruments website
3. Lead 1 identification shall be:
   a) A notch or other mark within this area
   b) A tab on lead 1, either side
4. No JEDEC registration as of December 2021

EXAMPLE BOARD LAYOUT

NAC0016A

CFP - 2.33mm max height

CERAMIC FLATPACK

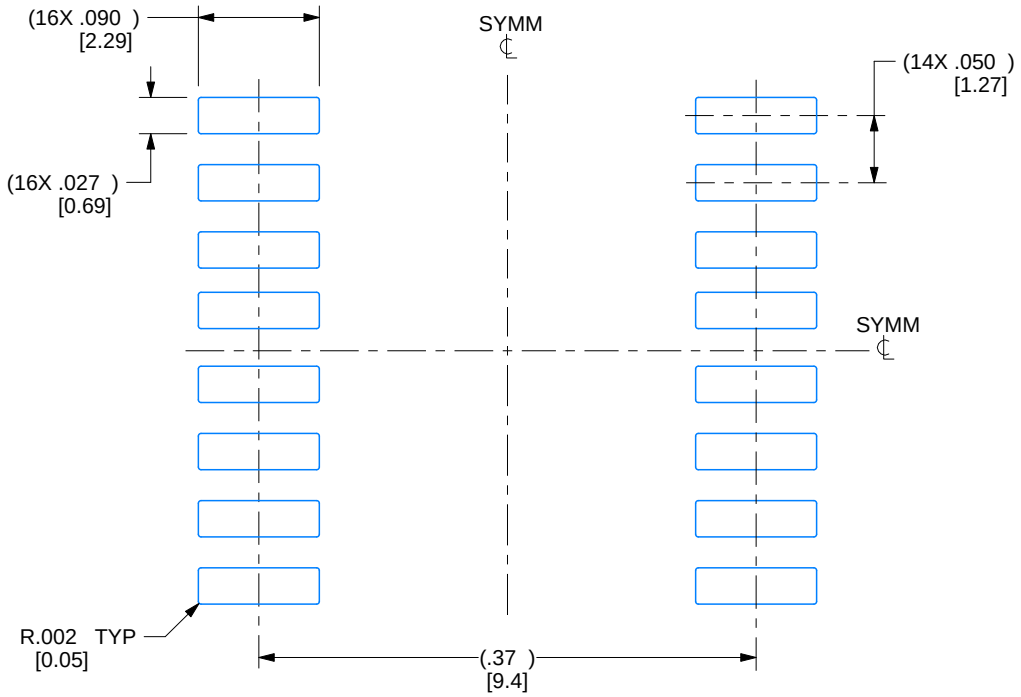

RECOMMENDED LAND PATTERN

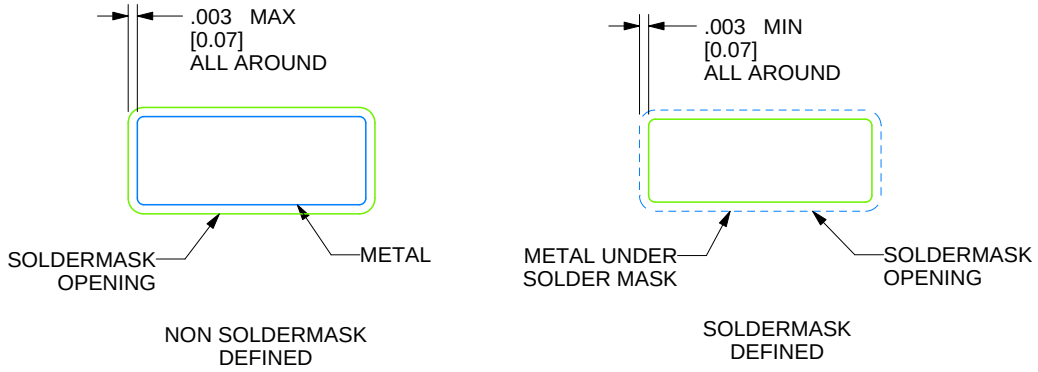

4215198/C 08/2022

REVISIONS

REV	DESCRIPTION	E.C.N.	DATE	BY/APP'D
A	RELEASE TO DOCUMENT CONTROL	2197879	12/30/2021	TINA TRAN / ANIS FAUZI
B	NO CHANGE TO DRAWING; REVISION FOR YODA RELEASE;	2198832	02/15/2022	K. SINCERBOX
C	.387± .003 WAS .39000± .00012;	2200917	08/08/2022	D. CHIN / K. SINCERBOX

NDT0003A

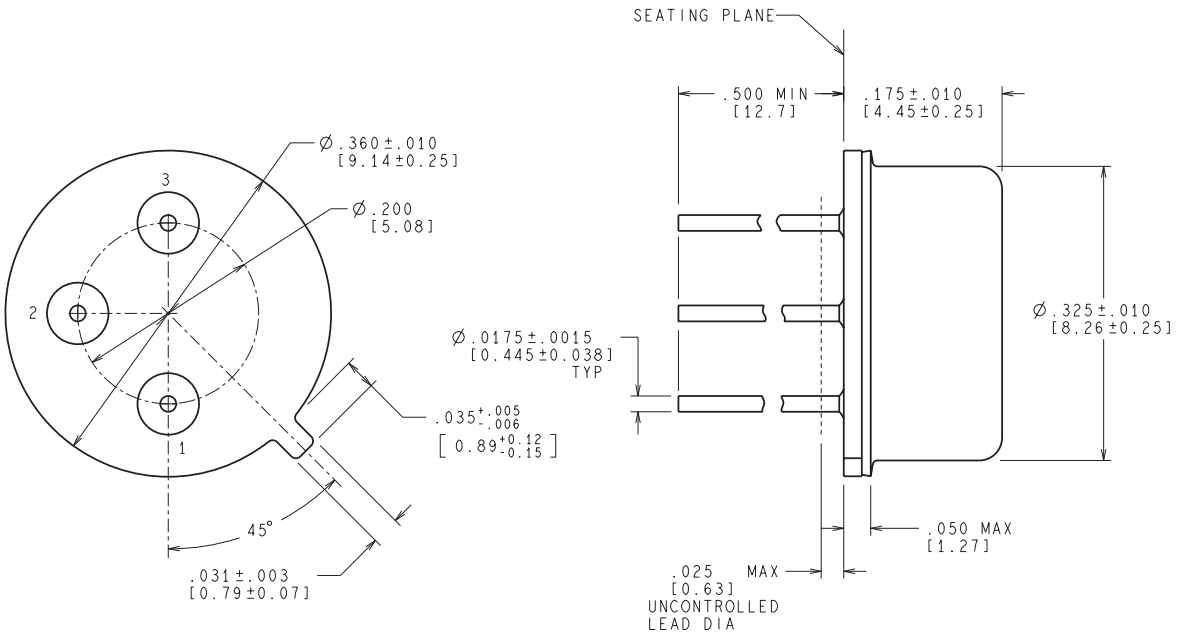

CONTROLLING DIMENSION IS INCH
VALUES IN [ ] ARE MILLIMETERS

MIL-PRF-38535
CONFIGURATION CONTROL

H03A (Rev D)

IMPORTANT NOTICE AND DISCLAIMER

TI PROVIDES TECHNICAL AND RELIABILITY DATA (INCLUDING DATASHEETS), DESIGN RESOURCES (INCLUDING REFERENCE DESIGNS), APPLICATION OR OTHER DESIGN ADVICE, WEB TOOLS, SAFETY INFORMATION, AND OTHER RESOURCES “AS IS” AND WITH ALL FAULTS, AND DISCLAIMS ALL WARRANTIES, EXPRESS AND IMPLIED, INCLUDING WITHOUT LIMITATION ANY IMPLIED WARRANTIES OF MERCHANTABILITY, FITNESS FOR A PARTICULAR PURPOSE OR NON-INFRINGEMENT OF THIRD PARTY INTELLECTUAL PROPERTY RIGHTS.

These resources are intended for skilled developers designing with TI products. You are solely responsible for (1) selecting the appropriate TI products for your application, (2) designing, validating and testing your application, and (3) ensuring your application meets applicable standards, and any other safety, security, regulatory or other requirements.

These resources are subject to change without notice. TI grants you permission to use these resources only for development of an application that uses the TI products described in the resource. Other reproduction and display of these resources is prohibited. No license is granted to any other TI intellectual property right or to any third party intellectual property right. TI disclaims responsibility for, and you fully indemnify TI and its representatives against any claims, damages, costs, losses, and liabilities arising out of your use of these resources.

TI’s products are provided subject to TI’s Terms of Sale, TI’s General Quality Guidelines, or other applicable terms available either on ti.com or provided in conjunction with such TI products. TI’s provision of these resources does not expand or otherwise alter TI’s applicable warranties or warranty disclaimers for TI products. Unless TI explicitly designates a product as custom or customer-specified, TI products are standard, catalog, general purpose devices.

TI objects to and rejects any additional or different terms you may propose.

Copyright © 2026, Texas Instruments Incorporated

Last updated 10/2025