LM140L/LM340L Series 3-Terminal Positive Regulators

Check for Samples: LM140L, LM340L

FEATURES

- **Line Regulation of 0.04%/V**
- **Load Regulation of 0.01%/mA**
- **Output Voltage Tolerances of**
  - **±2% at T_j = 25°C and ±4% Over the Temperature Range (LM140LA)**
  - **±3% Over the Temperature Range (LM340LA)**
- **Output Current of 100 mA**
- **Internal Thermal Overload Protection**
- **Output Transistor Safe Area Protection**
- **Internal Short Circuit Current Limit**
- **Available in**
  - **Metal TO Low Profile Package (LM140LA/LM340LA)**
  - **Plastic TO-92 (LM340LA)**

DESCRIPTION

The LM140L series of three terminal positive regulators is available with several fixed output voltages making them useful in a wide range of applications. The LM140LA is an improved version of the LM78LXX series with a tighter output voltage tolerance (specified over the full military temperature range), higher ripple rejection, better regulation and lower quiescent current. The LM140LA regulators have ±2% V_{OUT} specification, 0.04%/V line regulation, and 0.01%/mA load regulation. When used as a zener diode/resistor combination replacement, the LM140LA usually results in an effective output impedance improvement of two orders of magnitude, and lower quiescent current. These regulators can provide local on card regulation, eliminating the distribution problems associated with single point regulation. The voltages available allow the LM140LA to be used in logic systems, instrumentation, Hi-Fi, and other solid state electronic equipment. Although designed primarily as fixed voltage regulators, these devices can be used with external components to obtain adjustable voltages and currents.

The LM140LA/LM340LA are available in the low profile metal three lead TO (NDT) and the LM340LA are also available in the plastic TO-92 (LP). With adequate heat sinking the regulator can deliver 100 mA output current. Current limiting is included to limit the peak output current to a safe value. Safe area protection for the output transistor is provided to limit internal power dissipation. If internal power dissipation becomes too high for the heat sinking provided, the thermal shut-down circuit takes over, preventing the IC from overheating.

For applications requiring other voltages, see LM117L Data Sheet.

Output Voltage Options

LM140LA-5.0	5V	LM340LA-5.0	5V
LM140LA-12	12V	LM340LA-12	12V
LM140LA-15	15V	LM340LA-15	15V

Connection Diagrams

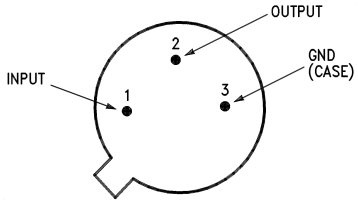

Figure 1. TO Metal Can Package (NDT)
(Bottom View)

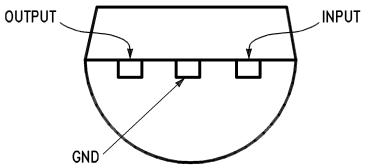

Figure 2. TO-92 Plastic Package (LP)
(Bottom View)

Please be aware that an important notice concerning availability, standard warranty, and use in critical applications of Texas Instruments semiconductor products and disclaimers thereto appears at the end of this data sheet.

All trademarks are the property of their respective owners.

PRODUCTION DATA information is current as of publication date. Products conform to specifications per the terms of the Texas Instruments standard warranty. Production processing does not necessarily include testing of all parameters.

Copyright © 1998–2013, Texas Instruments Incorporated

These devices have limited built-in ESD protection. The leads should be shorted together or the device placed in conductive foam during storage or handling to prevent electrostatic damage to the MOS gates.

Absolute Maximum Ratings (1) (2) (3)

Input Voltage		35V
Internal Power Dissipation (4)		Internally Limited
Operating Temperature Range	LM140LA	−55°C to +125°C
	LM340LA	0°C to +70°C
Maximum Junction Temperature		+150°C
Storage Temperature Range	Metal Can (NDT package)	−65°C to +150°C
	Molded TO-92	−55°C to +150°C
Lead Temperature (Soldering, 10 sec.)	Metal Can	+300°C
	Plastic TO-92	+230°C

(1) Absolute Maximum Ratings indicate limits beyond which damage to the device may occur. Operating Ratings indicate conditions for which the device is functional, but do not ensure specific performance limits.
(2) A military RETS specification is available upon request. At the time of printing, the LM140LA-5.0, -12, and -15 RETS specifications complied with the Min and Max limits in this table. The LM140LAH-5.0, LM140LAH-12, and LM140LAH-15 may also be procured as Standard Military Drawings.
(3) If Military/Aerospace specified devices are required, please contact the Texas Instruments Sales Office/ Distributors for availability and specifications.
(4) Thermal resistance of NDT-package is typically 26°C/W θ_{jC}, 250°C/W θ_{jA} still air, and 94°C/W θ_{jA} 400 lf/min of air. For the LP-package is 60°C/W θ_{jC}, 232°C/W θ_{jA} still air, and 88°C/W θ_{jA} at 400 lf/min of air. The maximum junction temperature shall not exceed 125°C on electrical parameters.

Electrical Characteristics

Test conditions unless otherwise specified. T_A = −55°C to +125°C (LM140LA), T_A = 0°C to +70°C (LM340LA), I_O = 40 mA, C_{IN} = 0.33 µF, C_O = 0.01 µF.

Output Voltage Option				5.0V			12V			15V			Units
Input Voltage (unless otherwise noted)				10V			19V			23V			
Symbol	Parameter	Conditions		Min	Typ	Max	Min	Typ	Max	Min	Typ	Max	
V_O	Output Voltage	T_j = 25°C		4.9	5	5.1	11.75	12	12.25	14.7	15	15.3	V
	Output Voltage Over Temp. (1)	LM140LA	I_O = 1 − 100 mA	4.8		5.2	11.5		12.5	14.4		15.6	
				(7.2–20)			(14.5–27)			(17.6–30)			
		LM340LA	I_O = 1 − 100 mA or I_O = 1 − 40 mA and V_{IN} = ( )V	4.85		5.15	11.65		12.35	14.55		15.45	
				(7–20)			(14.3–27)			(17.5–30)			
ΔV_O	Line Regulation	T_j = 25°C	I_O = 40 mA		18	30		30	65		37	70	mV
			V_{IN} = ( )V		(7–25)			(14.2–30)			(17.3–30)		
			I_O = 100 mA		18	30		30	65		37	70	
			V_{IN} = ( )V		(7.5–25)			(14.5–30)			(17.5–30)		
	Load Regulation	T_j = 25°C	I_O = 1 − 40 mA		5	20		10	40		12	50	
			I_O = 1 − 100 mA		20	40		30	80		35	100	
	Long Term Stability				12			24			30		mV 1000 hrs
I_O	Quiescent Current	T_j = 25°C			3	4.5		3	4.5		3.1	4.5	mA
		T_j = 125°C				4.2			4.2			4.2	
ΔI_Q	Quiescent Current Change	T_j = 25°C	ΔLoad I_O = 1 − 40 mA			0.1			0.1			0.1	mA
			ΔLine V_{IN} = ( )V			0.5			0.5			0.5	
					(7.5–25)			(14.3–30)			(17.5–30)		

(1) The temperature coefficient of V_{OUT} is typically within 0.01% V_O/°C.

Copyright © 1998–2013, Texas Instruments Incorporated

Electrical Characteristics (continued)

Test conditions unless otherwise specified. T_A = −55°C to +125°C (LM140LA), T_A = 0°C to +70°C (LM340LA), I_O = 40 mA, C_{IN} = 0.33 µF, C_O = 0.01 µF.

Output Voltage Option			5.0V			12V			15V			Units
Input Voltage (unless otherwise noted)			10V			19V			23V			
Symbol	Parameter	Conditions	Min	Typ	Max	Min	Typ	Max	Min	Typ	Max	
V_N	Output Noise Voltage	T_j = 25°C[2], f = 10 Hz–10 kHz		40			80			90		µV
$\frac{\Delta V_{IN}}{\Delta Vout}$	Ripple Rejection	f = 120 Hz, V_{IN} = ( )V	55	62		47	54		45	52		dB
			(7.5–18)			(14.5–25)			(17.5–28.5)			
	Input Voltage Required to Maintain Line Regulation	T_j = 25°C, I_O = 40 mA	7			14.2			17.3			V

(2) It is recommended that a minimum load capacitor of 0.01 µF be used to limit the high frequency noise bandwidth.

Copyright © 1998–2013, Texas Instruments Incorporated

Typical Performance Characteristics

Maximum Average Power Dissipation

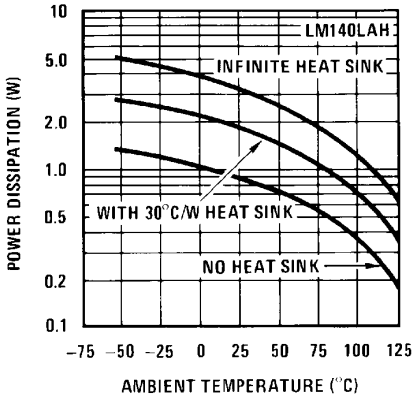

Figure 3.

Maximum Average Power Dissipation (Metal Can Package)

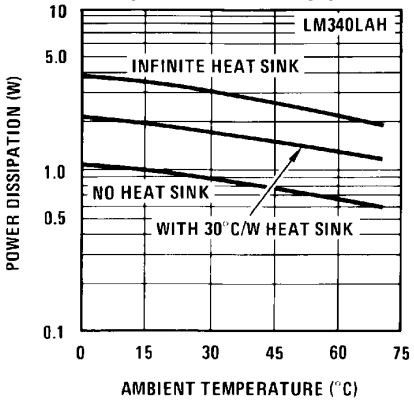

Figure 4.

Maximum Average Power Dissipation (Plastic Package)

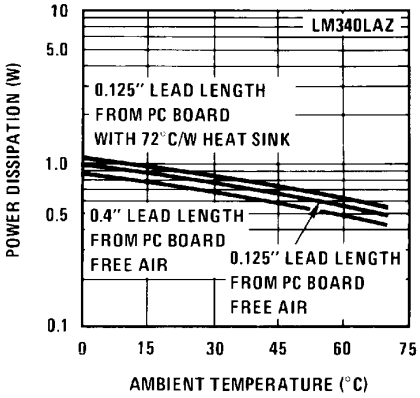

Figure 5.

Peak Output Current

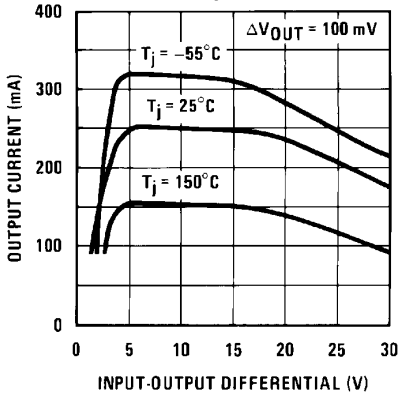

Figure 6.

Dropout Voltage

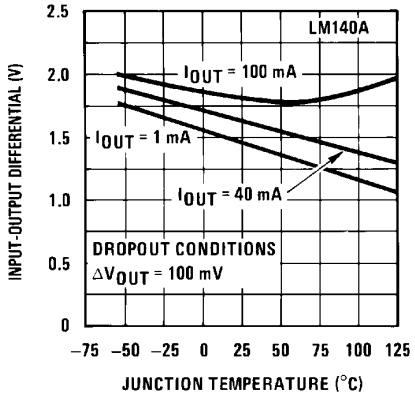

Figure 7.

Output Impedance

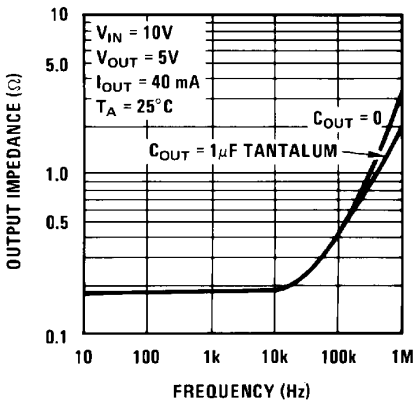

Figure 8.

Copyright © 1998–2013, Texas Instruments Incorporated

Typical Performance Characteristics (continued)

Ripple Rejection

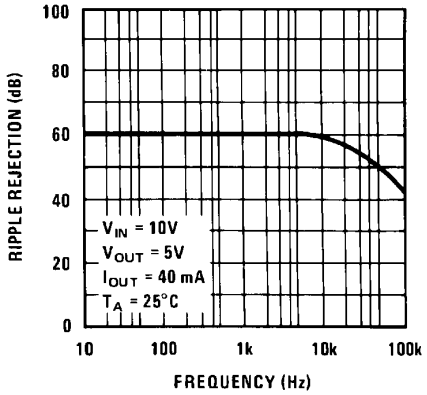

Figure 9.

Quiescent Current

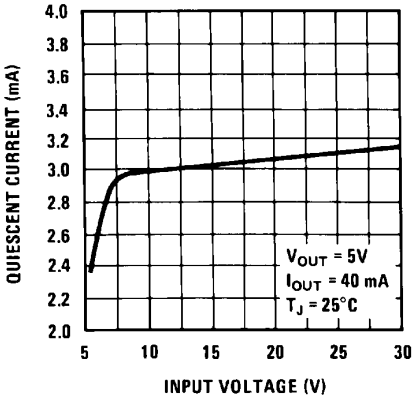

Figure 10.

Quiescent Current

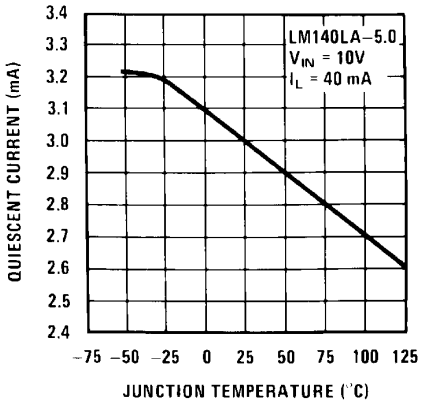

Figure 11.

TYPICAL APPLICATIONS

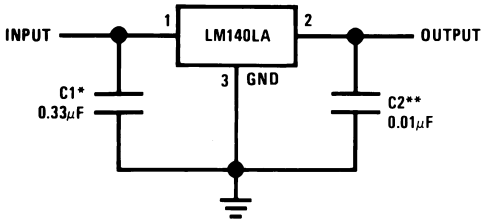

*Required if the regulator is located far from the power supply filter.
**It is recommended that a minimum load capacitor of 0.01 μF be used to limit the high frequency noise bandwidth.

Figure 12. Fixed Output Regulator

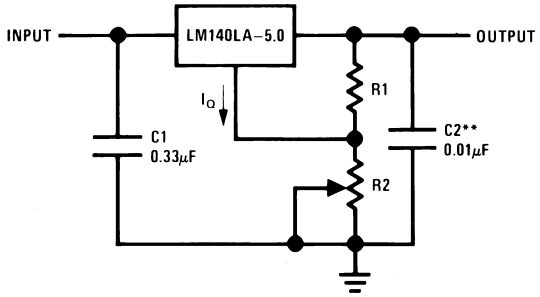

V_{OUT} = 5V + (5V/R1 + I_O) R2
5V/R1 = 3 I_O load regulation (L,) [(R1 + R2)/R1] (L, of LM140LA-5.0)

Figure 13. Adjustable Output Regulator

Copyright © 1998–2013, Texas Instruments Incorporated

Equivalent Circuit

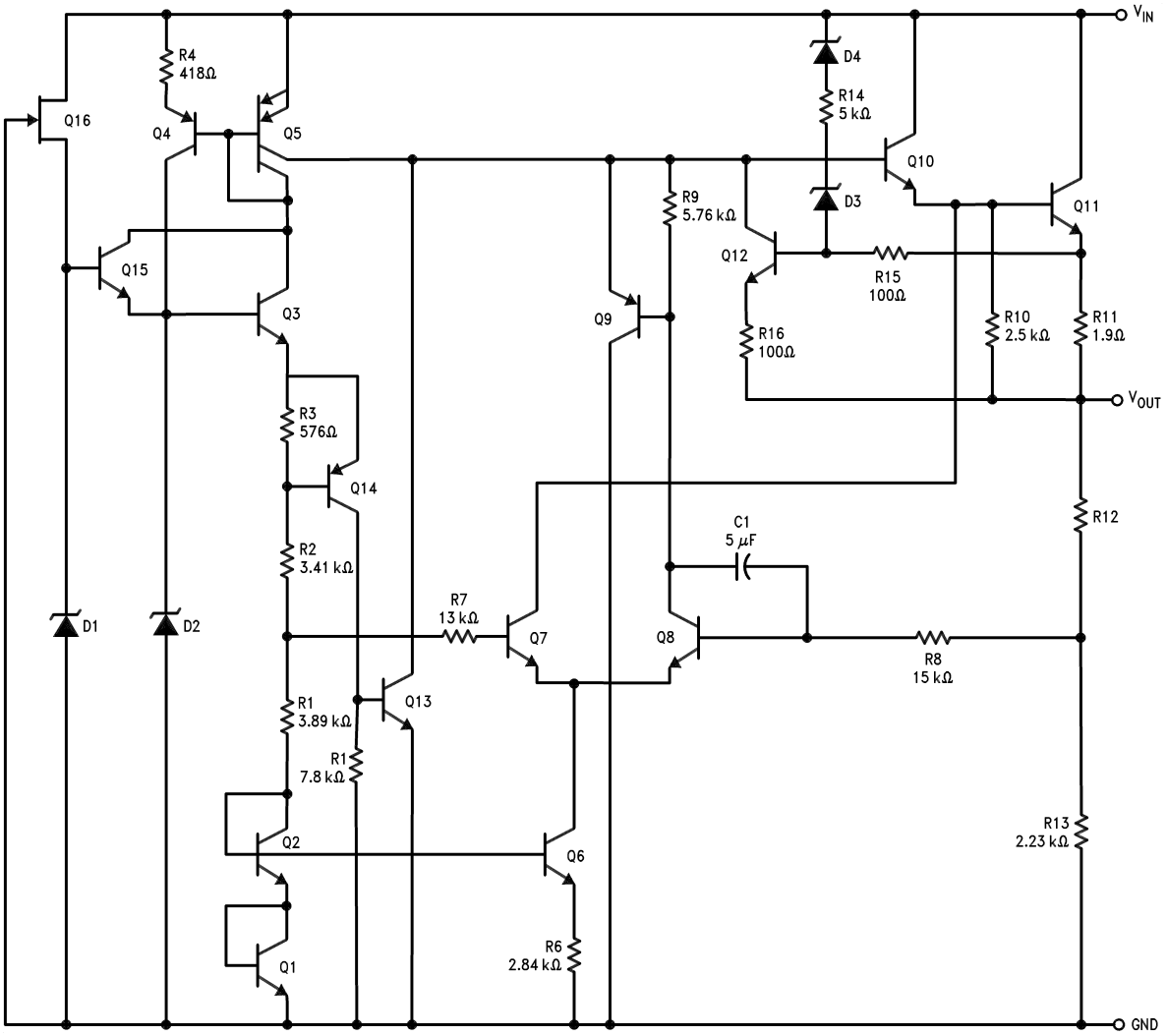

REVISION HISTORY

Changes from Revision A (March 2013) to Revision B	Page
• Changed layout of National Data Sheet to TI format	7

Copyright © 1998–2013, Texas Instruments Incorporated

PACKAGING INFORMATION

Orderable part number	Status (1)	Material type (2)	Package | Pins	Package qty | Carrier	RoHS (3)	Lead finish/ Ball material (4)	MSL rating/ Peak reflow (5)	Op temp (°C)	Part marking (6)
LM140LAH-12	Active	Production	TO (NDT) | 3	500 | BULK	Yes	AU	Level-1-NA-UNLIM	-55 to 125	(LM140LAH-12, LM140LAH-12)
LM140LAH-12/NOPB	Active	Production	TO (NDT) | 3	500 | BULK	Yes	AU	Level-1-NA-UNLIM	-55 to 125	(LM140LAH-12, LM140LAH-12)
LM140LAH-15	Active	Production	TO (NDT) | 3	500 | BULK	Yes	AU	Level-1-NA-UNLIM	-55 to 125	(LM140LAH-15, LM140LAH-15)
LM140LAH-15/NOPB	Active	Production	TO (NDT) | 3	500 | BULK	Yes	AU	Level-1-NA-UNLIM	-55 to 125	(LM140LAH-15, LM140LAH-15)
LM140LAH-5.0	Active	Production	TO (NDT) | 3	500 | BULK	Yes	AU	Level-1-NA-UNLIM	-55 to 125	(LM140LAH-5.0, LM140LAH-5.0)
LM140LAH-5.0/NOPB	Active	Production	TO (NDT) | 3	500 | BULK	Yes	AU	Level-1-NA-UNLIM	-55 to 125	(LM140LAH-5.0, LM140LAH-5.0)
LM340LAZ-5.0/LFT4	Active	Production	TO-92 (LP) | 3	2000 | LARGE T&R	Yes	Call TI	N/A for Pkg Type	-	340LAZ-5.0
LM340LAZ-5.0/LFT4.B	Active	Production	TO-92 (LP) | 3	2000 | LARGE T&R	Yes	Call TI	N/A for Pkg Type	See LM340LAZ-5.0/LFT4	340LAZ-5.0
LM340LAZ-5.0/NOPB	Active	Production	TO-92 (LP) | 3	1800 | BULK	Yes	Call TI	N/A for Pkg Type	0 to 70	340LAZ-5.0
LM340LAZ-5.0/NOPB.B	Active	Production	TO-92 (LP) | 3	1800 | BULK	Yes	Call TI	N/A for Pkg Type	See LM340LAZ-5.0/NOPB	340LAZ-5.0

(1) **Status:** For more details on status, see our product life cycle.

(2) **Material type:** When designated, preproduction parts are prototypes/experimental devices, and are not yet approved or released for full production. Testing and final process, including without limitation quality assurance, reliability performance testing, and/or process qualification, may not yet be complete, and this item is subject to further changes or possible discontinuation. If available for ordering, purchases will be subject to an additional waiver at checkout, and are intended for early internal evaluation purposes only. These items are sold without warranties of any kind.

(3) **RoHS values:** Yes, No, RoHS Exempt. See the TI RoHS Statement for additional information and value definition.

(4) **Lead finish/Ball material:** Parts may have multiple material finish options. Finish options are separated by a vertical ruled line. Lead finish/Ball material values may wrap to two lines if the finish value exceeds the maximum column width.

(5) **MSL rating/Peak reflow:** The moisture sensitivity level ratings and peak solder (reflow) temperatures. In the event that a part has multiple moisture sensitivity ratings, only the lowest level per JEDEC standards is shown. Refer to the shipping label for the actual reflow temperature that will be used to mount the part to the printed circuit board.

(6) **Part marking:** There may be an additional marking, which relates to the logo, the lot trace code information, or the environmental category of the part.

Multiple part markings will be inside parentheses. Only one part marking contained in parentheses and separated by a "~" will appear on a part. If a line is indented then it is a continuation of the previous line and the two combined represent the entire part marking for that device.

Important Information and Disclaimer: The information provided on this page represents TI's knowledge and belief as of the date that it is provided. TI bases its knowledge and belief on information provided by third parties, and makes no representation or warranty as to the accuracy of such information. Efforts are underway to better integrate information from third parties. TI has taken and continues to take reasonable steps to provide representative and accurate information but may not have conducted destructive testing or chemical analysis on incoming materials and chemicals. TI and TI suppliers consider certain information to be proprietary, and thus CAS numbers and other limited information may not be available for release.

In no event shall TI's liability arising out of such information exceed the total purchase price of the TI part(s) at issue in this document sold by TI to Customer on an annual basis.

LP0003A



PACKAGE OUTLINE

TO-92 - 5.34 mm max height

TO-92

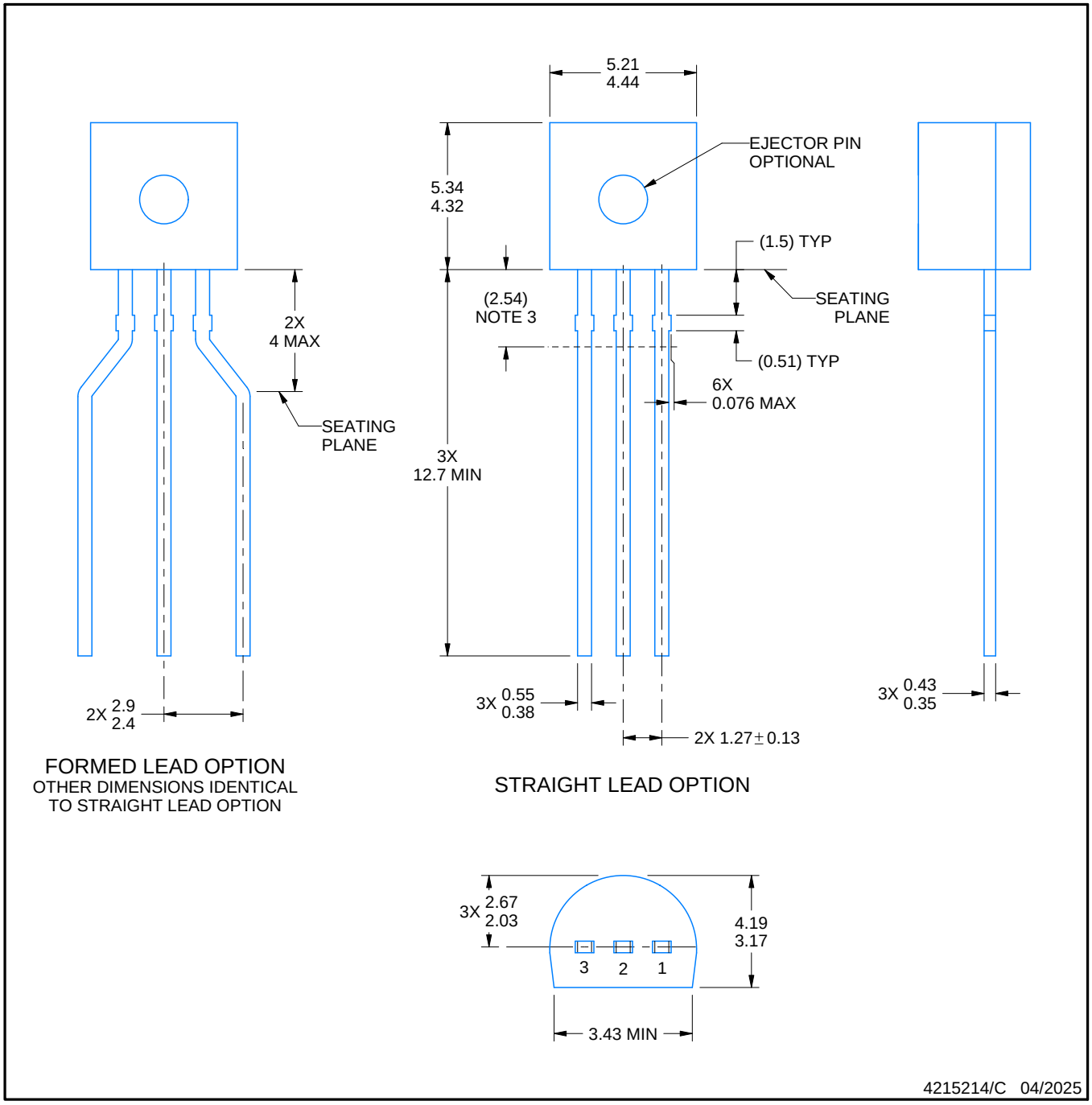

NOTES:

1. All linear dimensions are in millimeters. Any dimensions in parenthesis are for reference only. Dimensioning and tolerancing per ASME Y14.5M.
2. This drawing is subject to change without notice.
3. Lead dimensions are not controlled within this area.
4. Reference JEDEC TO-226, variation AA.
5. Shipping method:
   a. Straight lead option available in bulk pack only.
   b. Formed lead option available in tape and reel or ammo pack.
   c. Specific products can be offered in limited combinations of shipping medium and lead options.
   d. Consult product folder for more information on available options.

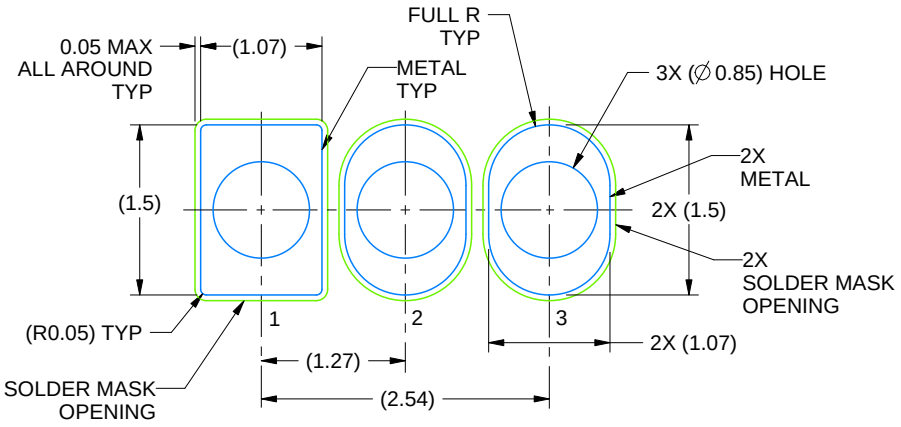

LAND PATTERN EXAMPLE
STRAIGHT LEAD OPTION
NON-SOLDER MASK DEFINED
SCALE:15X

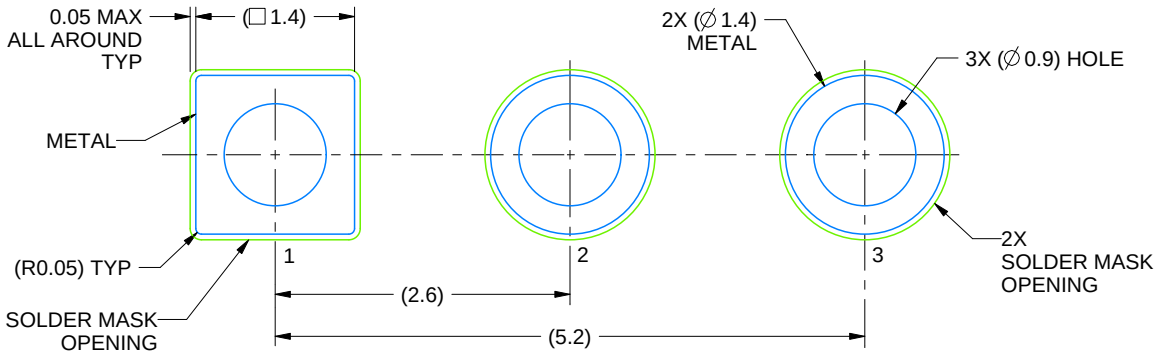

LAND PATTERN EXAMPLE
FORMED LEAD OPTION
NON-SOLDER MASK DEFINED
SCALE:15X

4215214/C 04/2025

LP0003A

TO-92 - 5.34 mm max height

TO-92

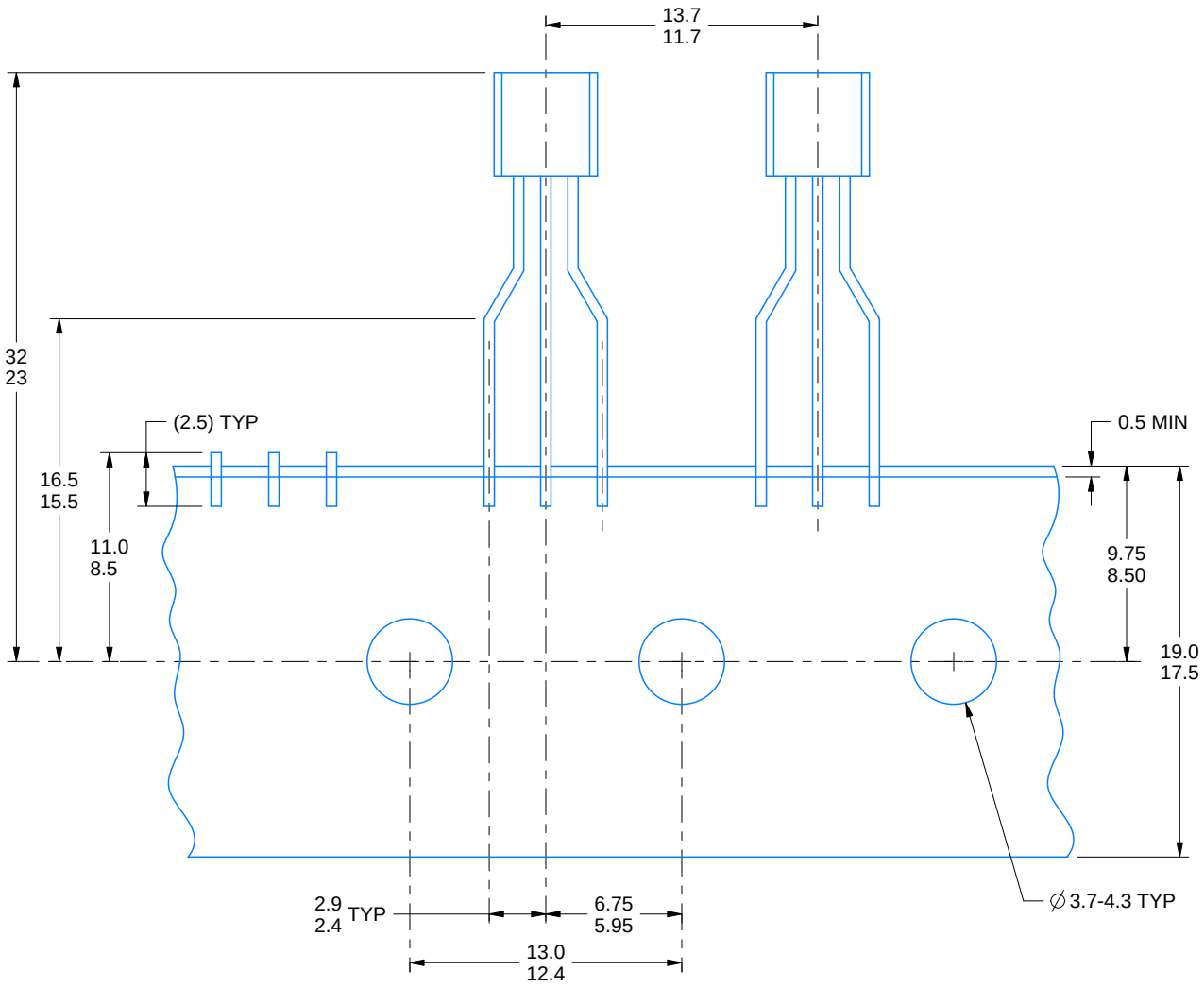

FOR FORMED LEAD OPTION PACKAGE

4215214/C 04/2025

NDT0003A

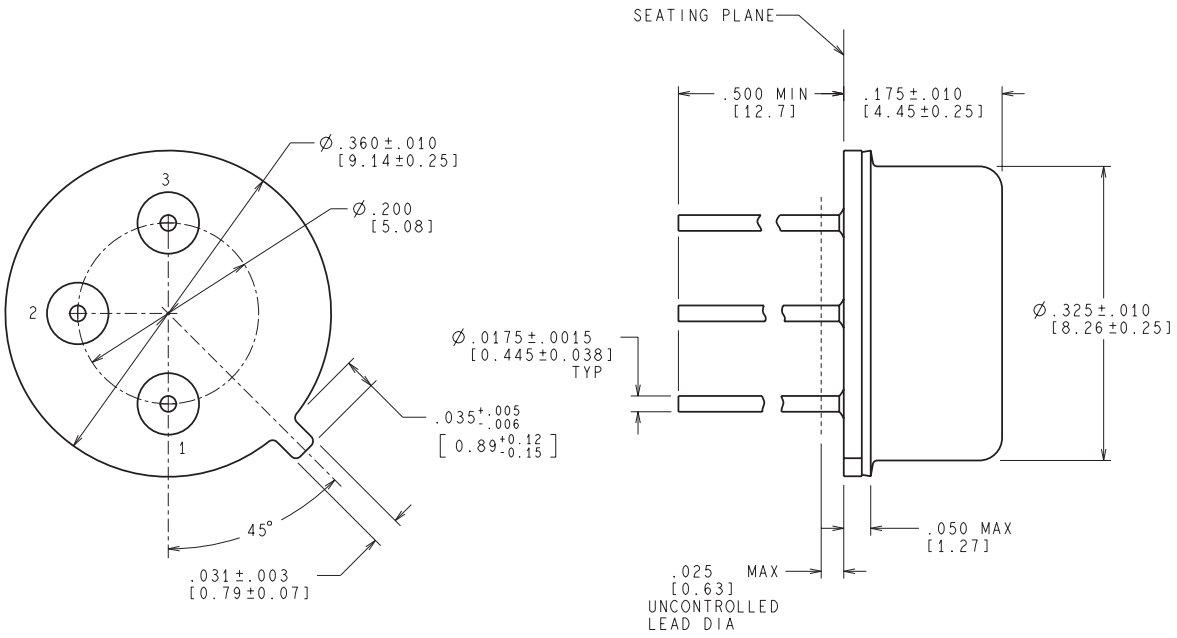

CONTROLLING DIMENSION IS INCH
VALUES IN [ ] ARE MILLIMETERS

MIL-PRF-38535
CONFIGURATION CONTROL

H03A (Rev D)

IMPORTANT NOTICE AND DISCLAIMER

TI PROVIDES TECHNICAL AND RELIABILITY DATA (INCLUDING DATASHEETS), DESIGN RESOURCES (INCLUDING REFERENCE DESIGNS), APPLICATION OR OTHER DESIGN ADVICE, WEB TOOLS, SAFETY INFORMATION, AND OTHER RESOURCES “AS IS” AND WITH ALL FAULTS, AND DISCLAIMS ALL WARRANTIES, EXPRESS AND IMPLIED, INCLUDING WITHOUT LIMITATION ANY IMPLIED WARRANTIES OF MERCHANTABILITY, FITNESS FOR A PARTICULAR PURPOSE OR NON-INFRINGEMENT OF THIRD PARTY INTELLECTUAL PROPERTY RIGHTS.

These resources are intended for skilled developers designing with TI products. You are solely responsible for (1) selecting the appropriate TI products for your application, (2) designing, validating and testing your application, and (3) ensuring your application meets applicable standards, and any other safety, security, regulatory or other requirements.

These resources are subject to change without notice. TI grants you permission to use these resources only for development of an application that uses the TI products described in the resource. Other reproduction and display of these resources is prohibited. No license is granted to any other TI intellectual property right or to any third party intellectual property right. TI disclaims responsibility for, and you fully indemnify TI and its representatives against any claims, damages, costs, losses, and liabilities arising out of your use of these resources.

TI’s products are provided subject to TI’s Terms of Sale, TI’s General Quality Guidelines, or other applicable terms available either on ti.com or provided in conjunction with such TI products. TI’s provision of these resources does not expand or otherwise alter TI’s applicable warranties or warranty disclaimers for TI products. Unless TI explicitly designates a product as custom or customer-specified, TI products are standard, catalog, general purpose devices.

TI objects to and rejects any additional or different terms you may propose.

Copyright © 2026, Texas Instruments Incorporated

Last updated 10/2025