LMG3614 650V 170mΩ GaN FET With Integrated Driver

1 Features

- 650V 170mΩ GaN power FET
- Integrated gate driver with low propagation delays and adjustable turn-on slew-rate control
- Overtemperature protection with $\overline{\text{FLT}}$ pin reporting
- AUX quiescent current: 55µA
- Maximum supply and input logic pin voltage: 26V
- 8mm × 5.3mm QFN package with thermal pad

2 Applications

- AC/DC adapters and chargers
- AC/DC USB wall outlet power supplies
- AC/DC auxiliary power supplies
- Television power supplies
- Mobile wall charger design
- USB wall power outlet
- Auxiliary-power supplies
- SMPS power supply for TV
- LED Power Supply

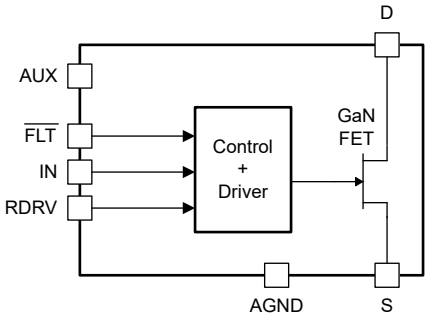

Simplified Block Diagram

3 Description

The LMG3614 is a 650V 170mΩ GaN power FET intended for switch-mode power-supply applications. The LMG3614 simplifies design and reduces component count by integrating the GaN FET and gate driver in a 8mm by 5.3mm QFN package.

Programmable turn-on slew rates provide EMI and ringing control.

The LMG3614 supports converter light-load efficiency requirements and burst-mode operation with low quiescent currents and fast start-up times. Protection features include under-voltage lockout (UVLO) and overtemperature protection. Overtemperature protection is reported with the open-drain $\overline{\text{FLT}}$ pin.

Package Information

PART NUMBER	PACKAGE(1)	PACKAGE SIZE(2)
LMG3614	REQ (VQFN, 38)	8mm × 5.3mm

(1) For more information, see the *Mechanical, Packaging, and Orderable Information* section.
(2) The package size (length × width) is a nominal value and includes pins, where applicable.

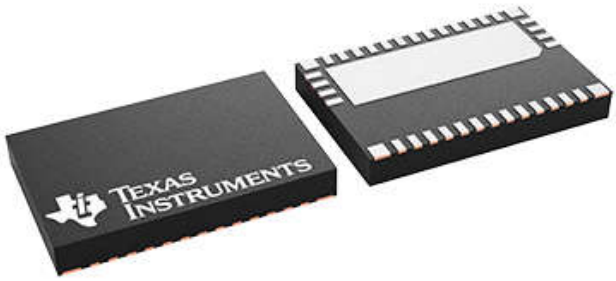

38-Pin VQFN

An IMPORTANT NOTICE at the end of this data sheet addresses availability, warranty, changes, use in safety-critical applications, intellectual property matters and other important disclaimers. PRODUCTION DATA.

Table of Contents

1 Features....1
2 Applications....1
3 Description....1
4 Pin Configuration and Functions....3
5 Specifications....5
5.1 Absolute Maximum Ratings....5
5.2 ESD Ratings....5
5.3 Recommended Operating Conditions....6
5.4 Thermal Information....6
5.5 Electrical Characteristics....7
5.6 Switching Characteristics....9
5.7 Typical Characteristics....10
6 Parameter Measurement Information....11
6.1 GaN Power FET Switching Parameters....11
7 Detailed Description....13
7.1 Overview....13
7.2 Functional Block Diagram....14
7.3 Feature Description....15
7.4 Device Functional Modes....17
8 Application and Implementation....18
8.1 Application Information....18
8.2 Typical Application....19
8.3 Power Supply Recommendations....21
8.4 Layout....21
9 Device and Documentation Support....24
9.1 Documentation Support....24
9.2 Receiving Notification of Documentation Updates....24
9.3 Support Resources....24
9.4 Trademarks....24
9.5 Electrostatic Discharge Caution....24
9.6 Glossary....24
10 Revision History....24
11 Mechanical, Packaging, and Orderable Information....24

Copyright © 2024 Texas Instruments Incorporated

4 Pin Configuration and Functions

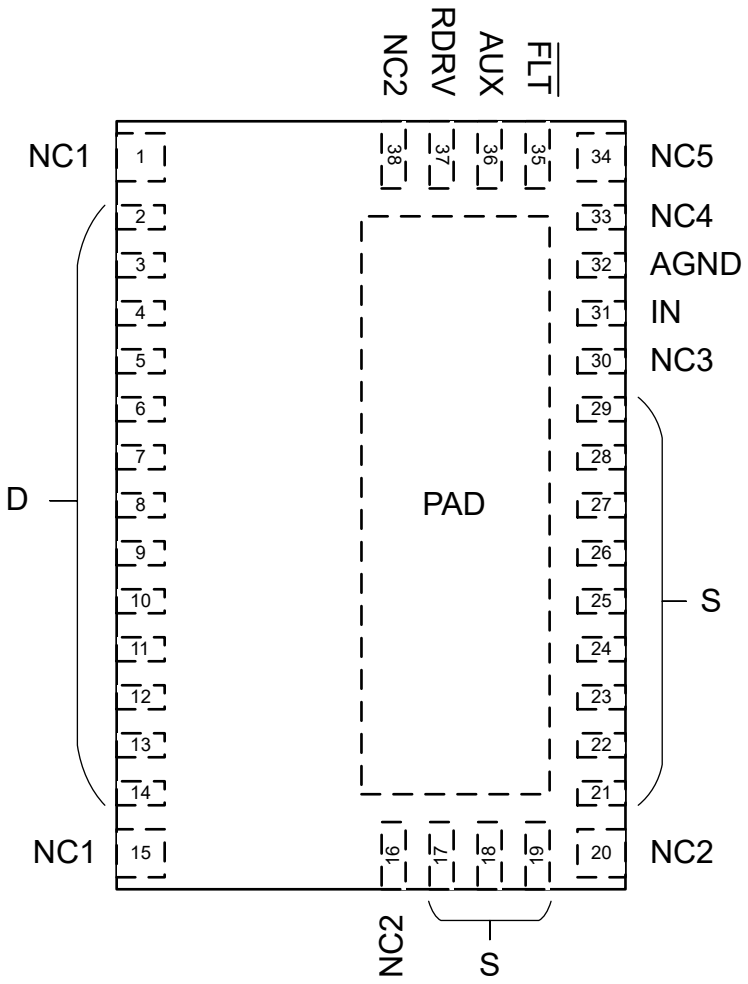

Figure 4-1. REQ Package, 38-Pin VQFN (Top View)

Table 4-1. Pin Functions

PIN		TYPE[1]	DESCRIPTION
NAME	NO.		
NC1	1, 15	NC	Used to anchor QFN package to PCB. Pins must be soldered to PCB landing pads. The PCB landing pads are non-solder mask defined pads and must not be physically connected to any other metal on the PCB. Internally connected to D.
D	2-14	P	GaN FET drain. Internally connected to NC1.
NC2	16, 20, 38	NC	Used to anchor QFN package to PCB. Pins must be soldered to PCB landing pads. The PCB landing pads are non-solder mask defined pads and must not be physically connected to any other metal on the PCB. Internally connected to AGND, S and, PAD.
S	17-19, 21-29	P	GaN FET source. Internally connected to AGND, PAD, and NC2.
NC3	30	NC	Pin is not functional. Do not connect PCB landing pad to other metal. Internally connected to AGND through active impedance.
IN	31	I	Gate-drive control input. There is a forward based ESD diode from IN to AUX so avoid driving IN higher than AUX.
AGND	32	GND	Analog ground. Internally connected to S, PAD, and NC2.
NC4	33	NC	Pin is not functional. Do not connect PCB landing pad to other metal. Internally connected to AGND through active impedance.
NC5	34	NC	Used to anchor QFN package to PCB. Pin must be soldered to a PCB landing pad. The PCB landing pad is non-solder mask defined pads and must not be physically connected to any other metal on the PCB. Pin not connected internally.
$\overline{\text{FLT}}$	35	O	Active-low fault output. Open-drain output that asserts during overtemperature protection.
AUX	36	P	Auxiliary voltage rail. Device supply voltage. Connect a local bypass capacitor between AUX and AGND.
RDRV	37	I	Drive strength control resistor. Set a resistance between RDRV and AGND to program the GaN FET turn-on slew rate.
PAD	—	—	Thermal pad. Internally connected to S, AGND, and NC2. All the S current may be conducted with PAD (PAD = S).

(1) I = input, O = output, I/O = input or output, GND = ground, P = power, NC = no connect.

Copyright © 2024 Texas Instruments Incorporated

5 Specifications

5.1 Absolute Maximum Ratings

Unless otherwise noted: voltages are respect to AGND(1)

			MIN	MAX	UNIT
V_{DS}	Drain-source (D to S) voltage, FET off			650	V
$V_{DS(surge)}$	Drain-source (D to S) voltage, surge condition, FET off(2)			720	V
$V_{DS(tr)(surge)}$	Drain-source (D to S) transient ringing peak voltage, surge condition, FET off(2)			800	V
	Pin voltage	AUX	–0.3	30	V
		IN, $\overline{FLT}$	–0.3	V_{AUX} + 0.3	V
		RDRV	–0.3	4	V
$I_{D(cnts)}$	Drain (D to S) continuous current, FET on		–6.6	6.6	A
$I_{D(pulse)(oc)}$	Drain (D to S) pulsed current, tp < 10 µs, FET on(3)			16	A
$I_{S(cnts)}$	Source (S to D) continuous current, FET off			6.6	A
	Positive sink current	$\overline{FLT}$ (while asserted)		Internally limited	mA
T_J	Operating junction temperature		–40	150	°C
T_{stg}	Storage temperature		–40	150	°C

(1) Operation outside the Absolute Maximum Ratings may cause permanent device damage. Absolute Maximum Ratings do not imply functional operation of the device at these or any other conditions beyond those listed under Recommended Operating Conditions. If used outside the Recommended Operating Conditions but within the Absolute Maximum Ratings, the device may not be fully functional, and this may affect device reliability, functionality, performance, and shorten the device lifetime.
(2) See GaN Power FET Switching Capability for more information on the GaN power FET switching capability.
(3) GaN power FET may self-limit below this value if it enters saturation.

5.2 ESD Ratings

				VALUE	UNIT
$V_{(ESD)}$	Electrostatic discharge	Human body model (HBM), per ANSI/ESDA/JEDEC JS-001(1)	Pins 1 through 15	±1000	V
			Pins 16 through 38	±2000	V
		Charged device model (CDM), per ANSI/ESDA/JEDEC JS-002(2)		±500	V

(1) JEDEC document JEP155 states that 500V HBM allows safe manufacturing with a standard ESD control process.
(2) JEDEC document JEP157 states that 250V CDM allows safe manufacturing with a standard ESD control process.

Copyright © 2024 Texas Instruments Incorporated

5.3 Recommended Operating Conditions

Unless otherwise noted: voltages are respect to AGND

			MIN	NOM	MAX	UNIT
	Supply voltage	AUX	10		26	V
	Input voltage	IN	0		V_{AUX}	V
	Pull-up voltage on open-drain output	$\overline{FLT}$	0		V_{AUX}	V
V_{IH}	High-level input voltage	IN	2.5			V
V_{IL}	Low-level input voltage				0.6	V
$I_{D(cnts)}$	Drain (D to S) continuous current, FET on		–5.4		5.4	A
C_{AUX}	AUX to AGND capacitance from external bypass capacitor		0.030			µF
R_{RDRV}	RDRV to AGND resistance from external slew-rate control resistor to configure below slew rate settings					
	slew rate setting 0 (slowest)		90	120	open	kΩ
	slew rate setting 1		42.5	47	51.5	kΩ
	slew rate setting 2		20	22	24	kΩ
	slew rate setting 3 (fastest)		0	5.6	11	kΩ

5.4 Thermal Information

THERMAL METRIC(1)		LMG3614 REQ (VQFN) 38 PINS	UNIT
$R_{\theta JA}$	Junction-to-ambient thermal resistance	26.5	°C/W
$R_{\theta JC(bot)}$	Junction-to-case (bottom) thermal resistance	1.67	°C/W

(1) For more information about traditional and new thermal metrics, see the Semiconductor and IC Package Thermal Metrics application report.

Copyright © 2024 Texas Instruments Incorporated

5.5 Electrical Characteristics

1) Symbol definitions: I_D = D to S current; I_S = S to D current; 2) Unless otherwise noted: voltage, resistance, and capacitance are respect to AGND; –40°C ≤ T_J ≤ 125°C; V_{DS} = 520V; 10V ≤ V_{AUX} ≤ 26V; V_{IN} = 0V; R_{RDRV} = 0Ω

PARAMETER		TEST CONDITIONS	MIN	TYP	MAX	UNIT
GAN POWER FET						
$R_{DS(on)}$	Drain-source (D to S) on resistance	V_{IN} = 5V, I_D = 3A, T_J = 25°C		170		mΩ
		V_{IN} = 5V, I_D = 3A, T_J = 125°C		303		
I_{DSS}	Drain (D to S) leakage current	V_{DS} = 650V, T_J = 25°C		2		µA
		V_{DS} = 650V, T_J = 125°C		10		
Q_{OSS}	Output (D to S) charge	V_{DS} = 400V		20.0		nC
C_{OSS}	Output (D to S) capacitance			29		pF
E_{OSS}	Output (D to S) capacitance stored energy			2.69		µJ
$C_{OSS,er}$	Energy related effective output (D to S) capacitance			33.3		pF
$C_{OSS,tr}$	Time related effective output (D to S) capacitance	V_{DS} = 0V to 400V		49.3		pF
Q_{RR}	Reverse recovery charge			0		nC
IN						
V_{IT+}	Positive-going input threshold voltage		1.7		2.45	V
$V_{IT–}$	Negative-going input threshold voltage		0.7		1.3	V
	Input threshold voltage hysteresis			1		V
	Pull-down input resistance	0V ≤ V_{PIN} ≤ 3V	200	400	600	kΩ
	Pull-down input current	10V ≤ V_{PIN} ≤ 26V; V_{AUX} = 26V		10		µA

Copyright © 2024 Texas Instruments Incorporated

5.5 Electrical Characteristics (continued)

1) Symbol definitions: I_D = D to S current; I_S = S to D current; 2) Unless otherwise noted: voltage, resistance, and capacitance are respect to AGND; –40°C ≤ T_J ≤ 125°C; V_{DS} = 520V; 10V ≤ V_{AUX} ≤ 26V; V_{IN} = 0V; R_{RDRV} = 0Ω

PARAMETER		TEST CONDITIONS	MIN	TYP	MAX	UNIT
OVERTEMPERATURE PROTECTION						
	Temperature fault – postive-going threshold temperature			165		°C
	Temperature fault – negative-going threshold temperature			145		°C
	Temperature fault – threshold temperature hysteresis			20		°C
$\overline{FLT}$						
	Low-level output voltage	$\overline{FLT}$ sinking 1mA while asserted			200	mV
	Off-state sink current	$V_{\overline{FLT}}$ = V_{AUX} while de-asserted			1	µA
AUX						
$V_{AUX,T+}$ (UVLO)	UVLO – positive-going threshold voltage		8.9	9.3	9.7	V
	UVLO – negative-going threshold voltage		8.6	9.0	9.4	V
	UVLO – threshold voltage hysteresis			250		mV
	Quiescent current			55	120	µA
	Operating current	V_{IN} = 0V or 5V, V_{DS} = 0V, f_{IN} = 500kHz		1.7		mA

Copyright © 2024 Texas Instruments Incorporated

5.6 Switching Characteristics

1) Symbol definitions: I_D = D to S current; I_S = S to D current; 2) Unless otherwise noted: voltage, resistance, and capacitance are respect to AGND; –40°C ≤ T_J ≤ 125°C; V_{DS} = 520V; 10V ≤ V_{AUX} ≤ 26V; V_{IN} = 0V; R_{RDRV} = 0Ω

PARAMETER		TEST CONDITIONS	MIN	TYP	MAX	UNIT
GAN POWER FET						
$t_{d(on)}$ (Idrain)	Drain current turn-on delay time	From V_{IN} > $V_{IN,IT+}$ to I_D > 37.5mA, V_{BUS} = 400V, L_{HB} current = 1.5A, at following slew rate settings, see GaN Power FET Switching Parameters				
		slew rate setting 0 (slowest)		64		ns
		slew rate setting 1		31		
		slew rate setting 2		26		
		slew rate setting 3 (fastest)		23		
$t_{d(on)}$	Turn-on delay time	From V_{IN} > $V_{IN,IT+}$ to V_{DS} < 320V, V_{BUS} = 400V, L_{HB} current = 1.5A, at following slew rate settings, see GaN Power FET Switching Parameters				
		slew rate setting 0 (slowest)		86		ns
		slew rate setting 1		40		
		slew rate setting 2		34		
		slew rate setting 3 (fastest)		27		
$t_{d(off)}$	Turn-off delay time	From V_{IN} < $V_{IN,IT-}$ to V_{DS} > 80V, V_{BUS} = 400V, L_{HB} current = 1.5A, (independent of slew rate setting), see GaN Power FET Switching Parameters		32		ns
$t_{f(off)}$	Turn-off fall time	From V_{DS} > 80V to V_{DS} > 320V, V_{BUS} = 400V, L_{HB} current = 1.5A, (independent of slew rate setting), see GaN Power FET Switching Parameters		22		ns
	Turn-on slew rate	From V_{DS} < 250V to V_{DS} < 150V, T_J = 25°C, V_{BUS} = 400V, L_{HB} current = 1.5A, at following slew rate settings, see GaN Power FET Switching Parameters				
		slew rate setting 0 (slowest)		20		V/ns
		slew rate setting 1		50		
		slew rate setting 2		75		
		slew rate setting 3 (fastest)		150		

Copyright © 2024 Texas Instruments Incorporated

5.7 Typical Characteristics

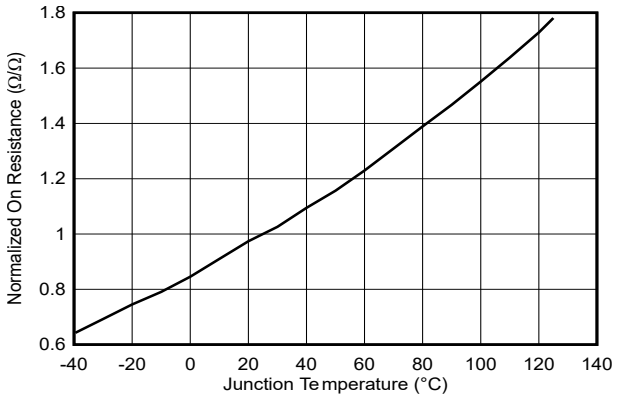

Figure 5-1. Normalized On-Resistance vs Junction Temperature

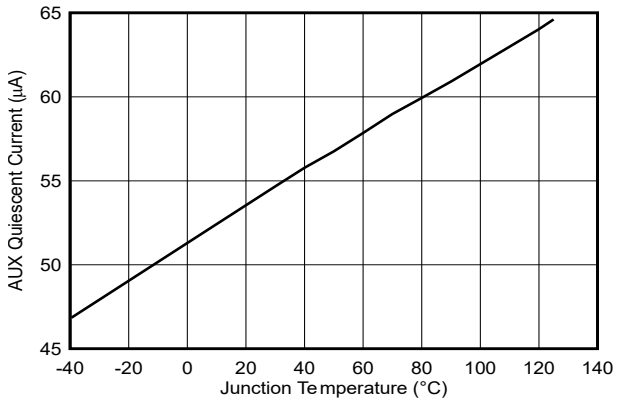

V_{IN} = 0V

Figure 5-2. AUX Quiescent Current vs Junction Temperature

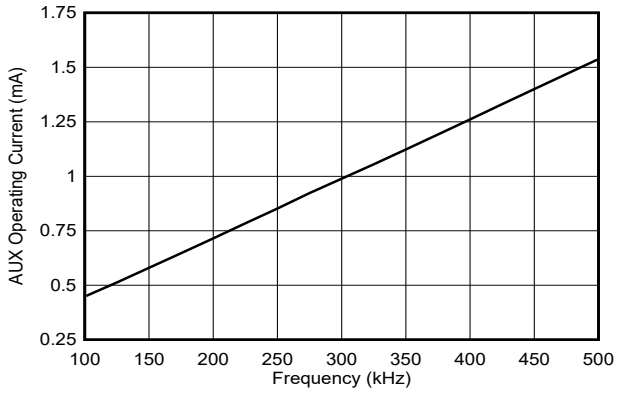

Figure 5-3. AUX Operating Current vs Frequency

Copyright © 2024 Texas Instruments Incorporated

6 Parameter Measurement Information

6.1 GaN Power FET Switching Parameters

Figure 6-1 shows the circuit used to measure the GaN power FET switching parameters. The circuit is operated as a double-pulse tester. Consult external references for double-pulse tester details. The circuit operates in the boost configuration with the low-side LMG3614 being the device under test (DUT). The high-side LMG3614 acts as the double-pulse tester diode and circulates the inductor current in the off-state, third-quadrant conduction mode.

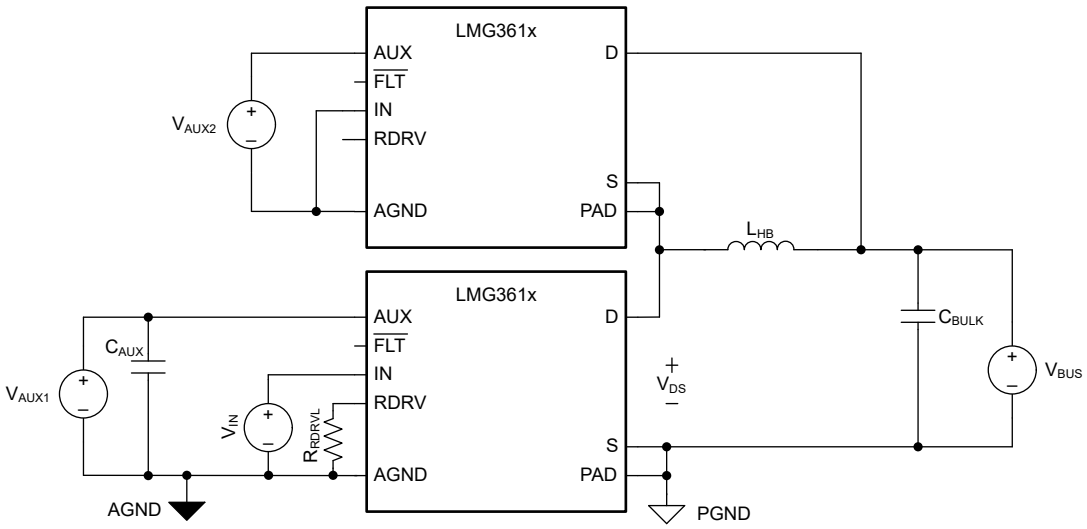

Figure 6-1. GaN Power FET Switching Parameters Test Circuit

Figure 6-2 shows the GaN power FET switching parameters.

The GaN power FET turn-on transition has three timing components: drain-current turn-on delay time, turn-on delay time, and turn-on rise time. Note that the turn-on rise time is the same as the V_{DS} 80% to 20% fall time. All three turn-on timing components are a function of the RDRV pin setting.

The GaN power FET turn-off transition has two timing components: turn-off delay time, and turn-off fall time. Note that the turn-off fall time is the same as the V_{DS} 20% to 80% rise time. The turn-off timing components are independent of the RDRV pin setting, but heavily dependent on the L_{HB} current.

The turn-on slew rate is measured over a smaller voltage delta (100V) compared to the turn-on rise time voltage delta (240V) to obtain a faster slew rate which is useful for EMI design. The RDRV pin is used to program the slew rate.

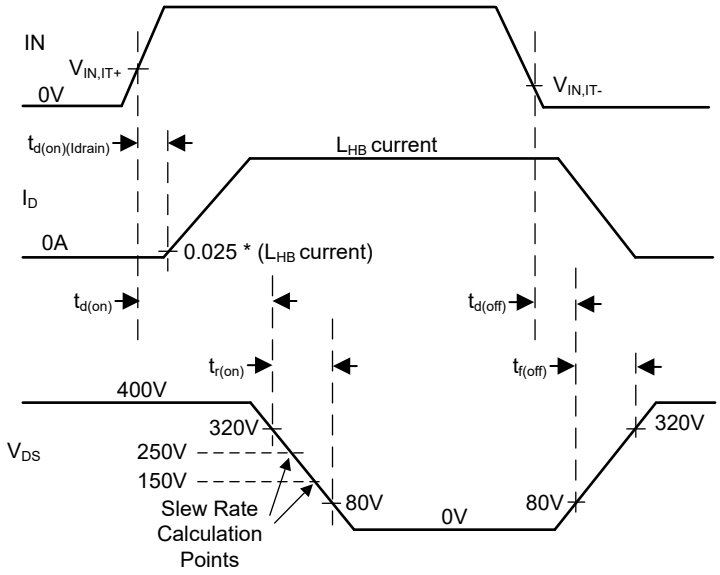

Figure 6-2. GaN Power FET Switching Parameters

Copyright © 2024 Texas Instruments Incorporated

7 Detailed Description

7.1 Overview

The LMG3614 is an integrated 650V 170mΩ GaN power FET intended for use in switching-power converters. The LMG3614 combines the GaN FET, gate driver, and protection features in a 8mm by 5.3mm QFN package.

The 650V rated GaN FET supports the high voltages encountered in off-line power switching applications. The GaN FET low output-capacitive charge reduces both the time and energy needed for power converter switching and is the key characteristic needed to create small, efficient power converters.

The LMG3614 internal gate driver regulates the drive voltage for optimum GaN FET on-resistance. The internal driver reduces total gate inductance and GaN FET common-source inductance for improved switching performance, including common-mode transient immunity (CMTI). The GaN FET turn-on slew rate can be individually programmed to one of four discrete settings for design flexibility with respect to power loss, switching-induced ringing, and EMI.

The AUX input supply wide voltage range is compatible with the corresponding wide range supply rail created by power supply controllers. Low AUX quiescent currents support converter burst-mode operation critical for meeting government light-load efficiency mandates. Further AUX quiescent current reduction is obtained by placing the device in standby mode with the EN pin.

The IN control pin has high input impedance, low input threshold voltage and maximum input voltage equal to the AUX voltage. This allows the pin to support both low voltage and high voltage input signals and be driven with low-power outputs.

The LMG3614 protection features are under-voltage lockout (UVLO) and overtemperature protection. The overtemperature protection is reported on the open drain $\overline{\text{FLT}}$ output.

Copyright © 2024 Texas Instruments Incorporated

7.2 Functional Block Diagram

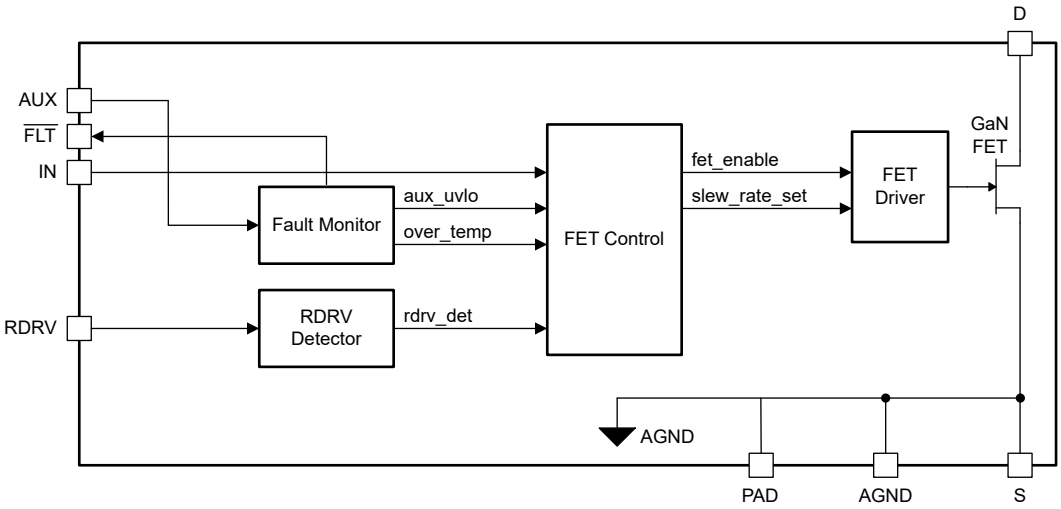

Copyright © 2024 Texas Instruments Incorporated

7.3 Feature Description

7.3.1 GaN Power FET Switching Capability

Due to the silicon FET's long reign as the dominant power-switch technology, many designers are unaware that the nameplate drain-source voltage cannot be used as an equivalent point to compare devices across technologies. The nameplate drain-source voltage of a silicon FET is set by the avalanche breakdown voltage. The nameplate drain-source voltage of a GaN FET is set by the long term compliance to data sheet specifications.

Exceeding the nameplate drain-source voltage of a silicon FET can lead to immediate and permanent damage. Meanwhile, the breakdown voltage of a GaN FET is much higher than the nameplate drain-source voltage. For example, the breakdown drain-source voltage of the LMG3614 GaN power FET is more than 800V which allows the LMG3614 to operate at conditions beyond an identically nameplate rated silicon FET.

The LMG3614 GaN power FET switching capability is explained with the assistance of Figure 7-1. The figure shows the drain-source voltage versus time for the LMG3614 GaN power FET for two distinct switch cycles in a switching application. No claim is made about the switching frequency or duty cycle. The LMG3614 GaN power FETs are intended to be turned on in either zero-voltage switching (ZVS) or discontinuous-conduction mode (DCM) switching conditions.

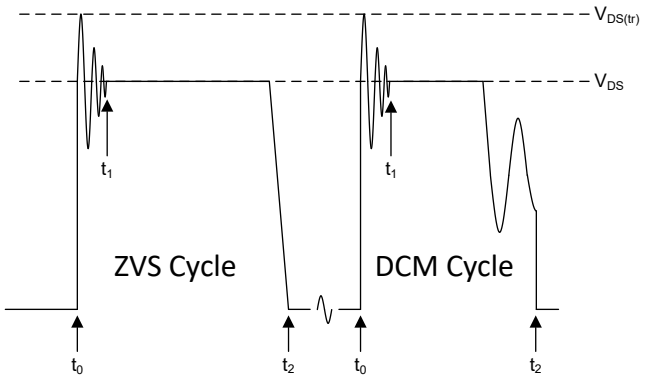

Figure 7-1. GaN Power FET Switching Capability

Each cycle starts before t_0 with the FET in the on state. At t_0 the GaN FET turns off and parasitic elements cause the drain-source voltage to ring at a high frequency. The high frequency ringing has damped out by t_1. Between t_1 and t_2 the FET drain-source voltage is set by the characteristic response of the switching application. The characteristic is shown as a flat line (plateau), but other responses are possible. At t_2 the GaN FET turns on. For rare surge events, the transient ring voltage is limited to 800V and the plateau voltage is limited to 720V.

Copyright © 2024 Texas Instruments Incorporated

7.3.2 Turn-On Slew-Rate Control

The turn-on slew rate of the GaN power FET is programmed to one of four discrete settings by the resistance between the RDRV and AGND pins. The slew-rate setting is determined one time during AUX power up when the AUX voltage goes above the AUX power-on reset voltage. The slew-rate setting determination time is not specified but is around 0.4 µs.

Table 7-1 shows the recommended typical resistance programming value for the four slew rate settings and the typical turn-on slew rate at each setting. As noted in the table, an open-circuit connection is acceptable for programming slew-rate setting 0 and a short-circuit connection (RDRV shorted to AGND) is acceptable for programming slew-rate setting 3.

Table 7-1. Slew-Rate Setting

TURN-ON SLEW RATE SETTING	RECOMMENDED TYPICAL PROGRAMMING RESISTANCE (kΩ)	TYPICAL TURN-ON SLEW RATE (V/ns)	COMMENT
0 (slowest)	120	20	Open-circuit connection for programming resistance is acceptable.
1	47	50	
2	22	75	
3 (fastest)	5.6	150	Short-circuit connection for programming resistance (RDRV shorted to AGND) is acceptable.

7.3.3 Input Control Pin (IN)

The IN pin is used to turn the GaN power FET on and off.

The IN pin has a typical 1V input-voltage-threshold hysteresis for noise immunity. The pin also has a typical 400kΩ pull-down resistance to protect against floating inputs. The 400kΩ saturates for nominal input voltages above 4V to limit the maximum input pull-down current to a typical 10µA.

The IN turn-on action is blocked by the following conditions:

- AUX UVLO
- Overtemperature protection

The AUX UVLO and overtemperature protection are independent of the IN logic state. Figure 7-2 shows the IN independent blocking condition operation.

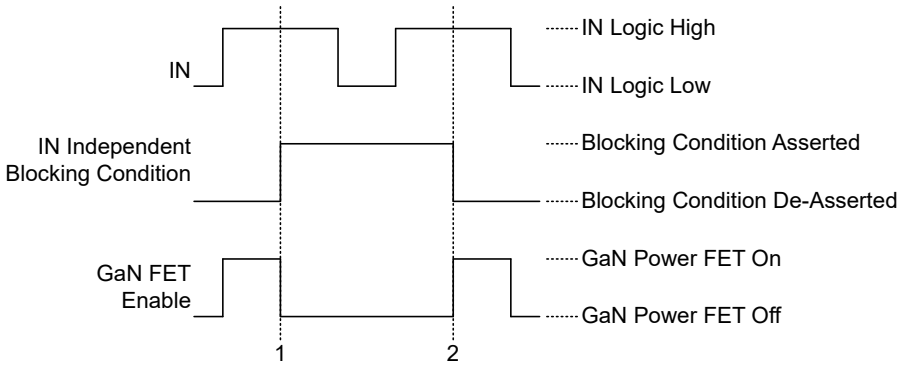

Figure 7-2. IN Independent Blocking Condition Operation

7.3.4 AUX Supply Pin

The AUX pin is the input supply for the internal circuits.

Copyright © 2024 Texas Instruments Incorporated

7.3.4.1 AUX Power-On Reset

The AUX power-on reset disables all low-side functionality if the AUX voltage is below the AUX power-on reset voltage. The AUX power-on reset voltage is not specified but is around 5V. The AUX power-on reset initates the one-time determination of the low-side slew-rate setting programmed on the RDRV pin when the AUX voltage goes above the AUX power-on reset voltage. The AUX power-on reset enables the overtemperature protection function if the AUX voltage is above the AUX power-on reset voltage.

7.3.4.2 AUX Under-Voltage Lockout (UVLO)

The AUX UVLO holds off the GaN power FET if the AUX voltage is below the AUX UVLO voltage. Figure 7-2 shows the AUX UVLO hold-off (blocking) operation. The AUX UVLO voltage hysteresis prevents on-off chatter near the UVLO voltage trip point.

7.3.5 Overtemperature Protection

The overtemperature protection holds off the GaN power FET if the LMG3614 temperature is above the overtemperature protection temperature. Figure 7-2 shows the overtemperature protection hold-off (blocking) operation. The overtemperature protection hysteresis avoids erratic thermal cycling.

An overtemperature fault is reported on the $\overline{\text{FLT}}$ pin when the overtemperature protection is asserted. This is the only fault event reported on the $\overline{\text{FLT}}$ pin. The overtemperature protection is enabled when the AUX voltage is above the AUX power-on reset voltage. The low AUX power-on reset voltage helps the overtemperature protection remain operational when the AUX rail droops during the application cool-down phase.

7.3.6 Fault Reporting

The LMG3614 only reports an overtemperature fault. An overtemperature fault is reported on the $\overline{\text{FLT}}$ pin when the Overtemperature Protection function is asserted. The $\overline{\text{FLT}}$ pin is an active low open-drain output so the pin pulls low when there is an overtemperature fault.

7.4 Device Functional Modes

The LMG3614 has one mode of operation that applies when operated within the recommended operating conditions.

Copyright © 2024 Texas Instruments Incorporated

8 Application and Implementation

Note

Information in the following applications sections is not part of the TI component specification, and TI does not warrant its accuracy or completeness. TI's customers are responsible for determining suitability of components for their purposes, as well as validating and testing their design implementation to confirm system functionality.

8.1 Application Information

The LMG3614 enables the simple adoption of GaN FET technology in switch-mode power-supply applications. The integrated gate driver, low IN input threshold voltage, and wide AUX input-supply voltage allows the LMG3614 to seamlessly pair with common industry power-supply controllers.

Using the LMG3614 only requires setting the desired turn-on slew rate with a programming resistor.

Copyright © 2024 Texas Instruments Incorporated

8.2 Typical Application

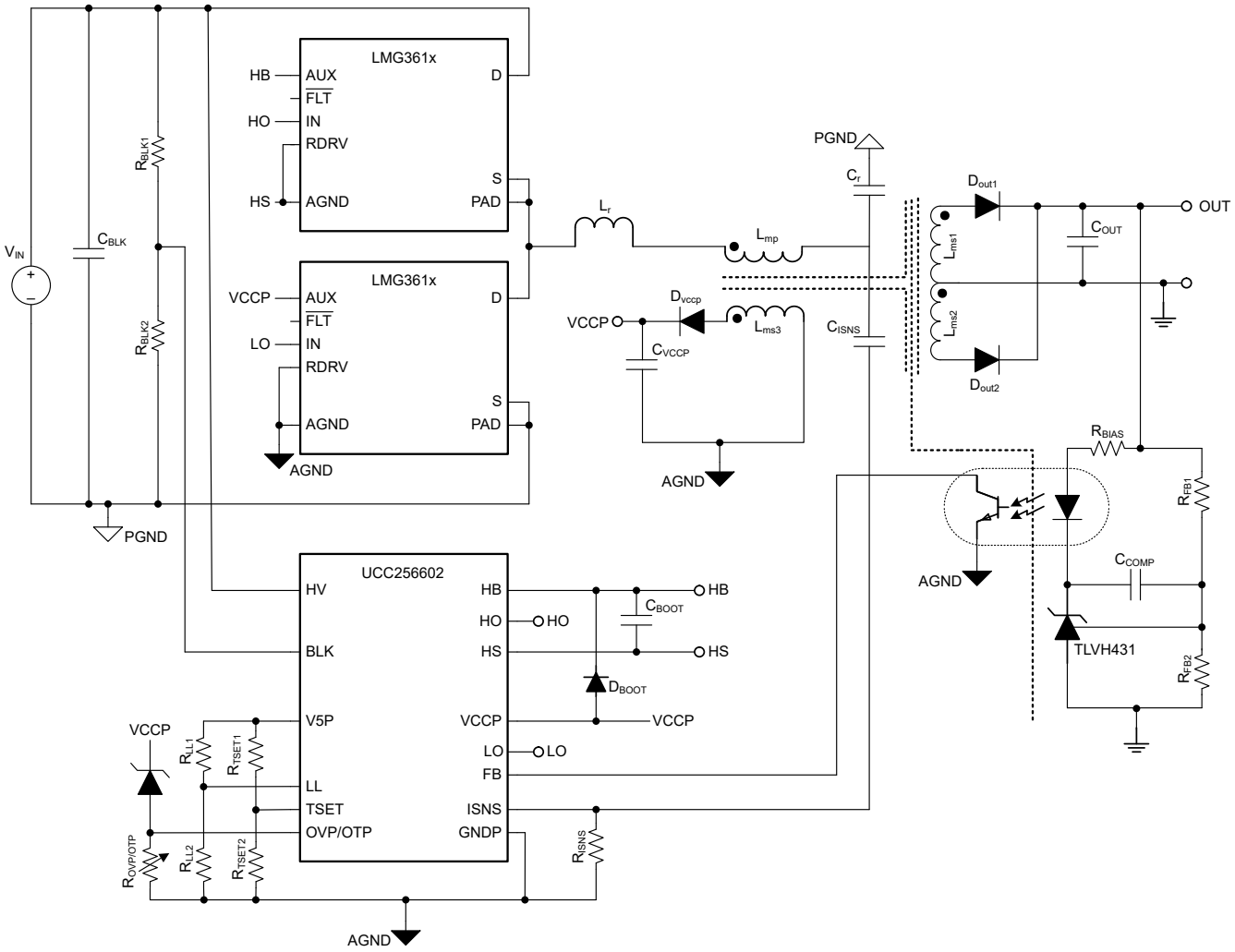

Figure 8-1. 200W LLC Converter Application

8.2.1 Design Requirements

Table 8-1. Design Specification

SPECIFICATION	VALUE
Input DC voltage range	365VDC to 410VDC
Output DC voltage	19.5V
Output rated current	10.25A
Output voltage ripple at 390VDC	195mVpp
Peak efficiency at 390VDC	94%

8.2.2 Detailed Design Procedure

The typical application shows the LMG3614 pairing seamlessly with the Texas Instruments UCC25660 LLC controller to create a high-power-density, high-efficiency, 200W, LLC converter. The 200W LLC converter application is adapted from the typical application found in the UCC25660 data sheet. The UCC25660 data sheet typical application design procedure is not repeated here. Refer to the UCC25660 data sheet for the details in designing the LLC primary power stage and in using the UCC25660 controller. This detailed design procedure focuses on the specifics of using the LMG3614 in the application.

8.2.2.1 Turn-On Slew-Rate Design

The LMG3614 turn-on slew rates are programmed as discussed in the *Turn-On Slew-Rate Control* section. The design consideration is the trade-off between power supply efficiency and EMI / transient ringing. Slower turn-on slew-rates lessen EMI and ringing problems but can increase switching losses and vice versa.

The UCC256602 controller used in the typical application provides for ZVS in all expected converter operation. Since EMI and ringing issues are not seen in ZVS, the turn-on slew rate is programmed to the fastest setting to minimize third-quadrant losses at the beginning of the turn-on event. Third-quadrant losses are not impacted by the slew rate. However, third-quadrant losses are effected by the switch turn-on delay which is also a function of the programmed slew rate. The RDRV pins are shorted to the AGND pin to program the fastest slew rate settings.

8.2.3 Application Curve

The following waveform shows typical switching waveforms. The red trace is the stacked LMG3614 half-bridge switch-node voltage, the green trace is the current-sense voltage across R_{ISNS}, and the blue trace is V_{OUT}.

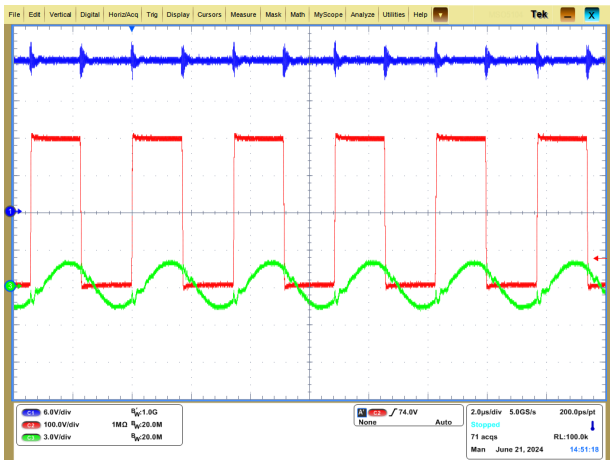

Figure 8-2. V_{IN} = 400VDC

Copyright © 2024 Texas Instruments Incorporated

8.3 Power Supply Recommendations

The LMG3614 operates from a single input supply connected to the AUX pin. The LMG3614 supports being operated from the same supply managed and used by the power supply controller. The wide recommended AUX voltage range of 10V to 26V overlaps common-controller supply-pin turn-on and UVLO voltage limits.

The AUX external capacitance is recommended to be a ceramic capacitor that is at least 0.03µF over operating conditions.

8.4 Layout

8.4.1 Layout Guidelines

8.4.1.1 Solder-Joint Stress Relief

Large QFN packages can experience high solder-joint stress. Several best practices are recommended to provide solder-joint stress relief. First, the instructions for the NC1, NC2, and NC3 anchor pins found in Table 4-1 must be followed. Second, all the board solder pads must be non-solder-mask defined (NSMD) as shown in the land pattern example in the *Mechanical, Packaging, and Orderable Information* section. Finally, any board trace connected to an NSMD pad must be less than two thirds the width of the pad on the pad side where it is connected. The trace must maintain this two-thirds width limit for as long as it is not covered by solder mask. After the trace is under solder mask, there are no limits on the trace dimensions. All these recommendations are followed in the *Layout Example* section.

8.4.1.2 Signal-Ground Connection

Design the power supply with separate signal and power grounds that only connect in one location. Connect the LMG3614 AGND pin to signal ground. Connect the LMG3614 SL pin and PAD thermal pad to power ground. This serves as the single connection point between the signal and power grounds since the AGND pin, S pin, and PAD thermal pad are connected internally. Do not connect the signal and power grounds anywhere else on the board except as recommended in the next sentence. To facillitate board debug with the LMG3614 not installed, connect the AGND pad to the PAD thermal pad as shown in the *Layout Example* section.

Copyright © 2024 Texas Instruments Incorporated

8.4.2 Layout Example

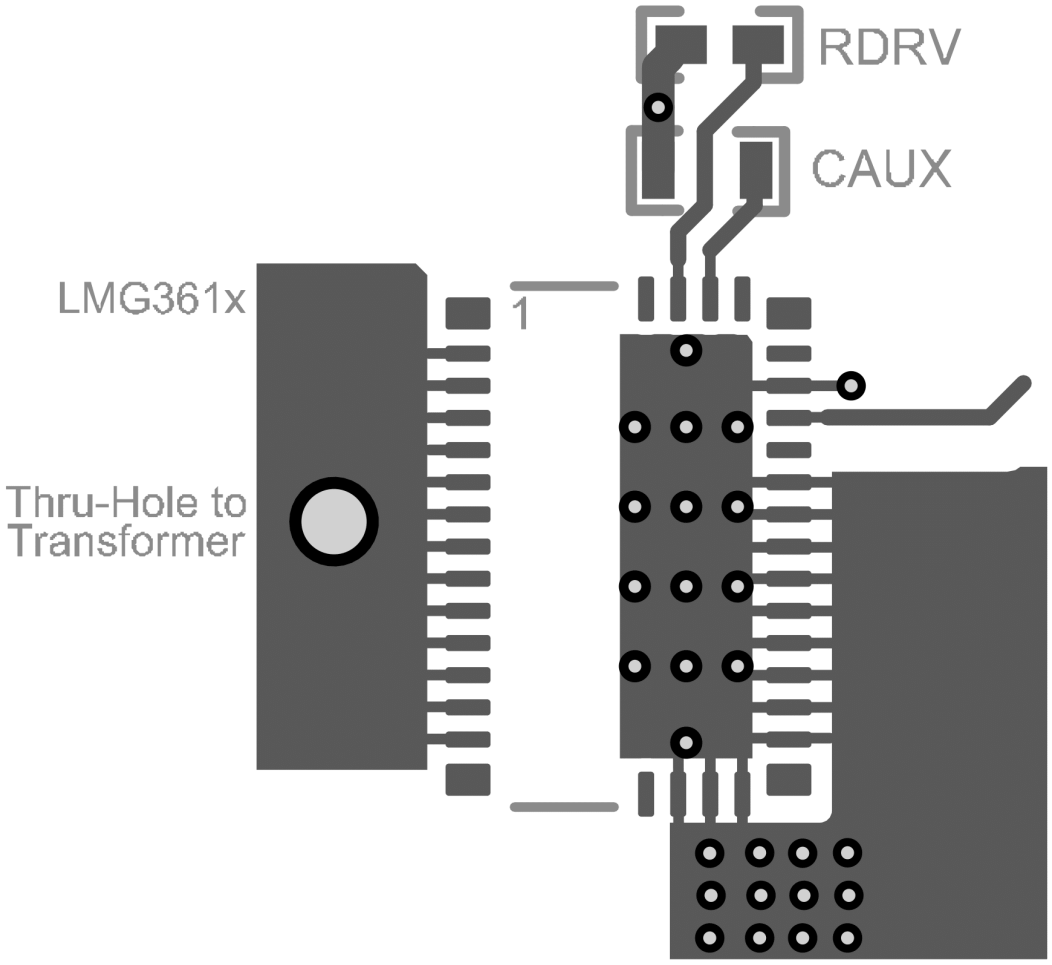

Figure 8-3. PCB Top Layer (First Layer)

Copyright © 2024 Texas Instruments Incorporated

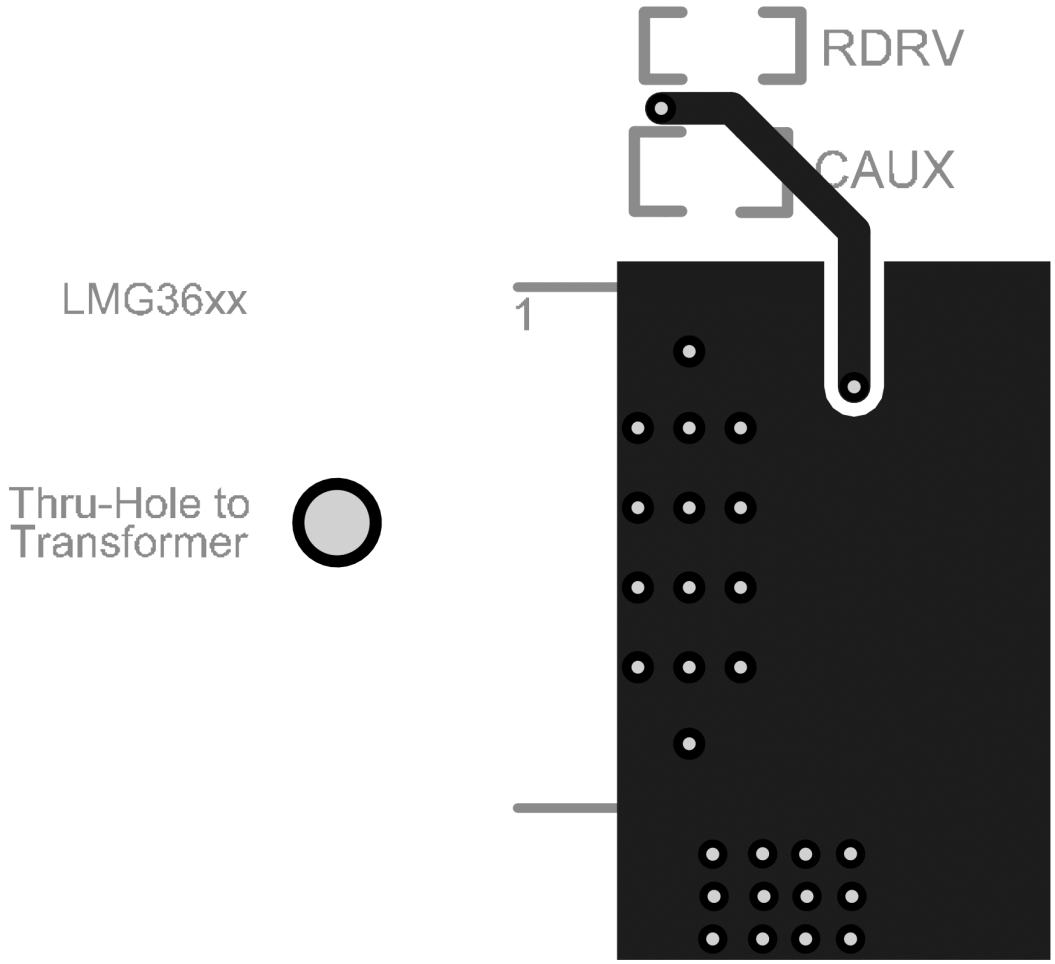

Figure 8-4. PCB Bottom Layer (Second Layer)

Copyright © 2024 Texas Instruments Incorporated

9 Device and Documentation Support

9.1 Documentation Support

9.1.1 Related Documentation

The **UCC25660X Design Calculator** is an Excel-based calculation tool for LLC converter design using the UCC25660 controller.

9.2 Receiving Notification of Documentation Updates

To receive notification of documentation updates, navigate to the device product folder on ti.com. Click on *Notifications* to register and receive a weekly digest of any product information that has changed. For change details, review the revision history included in any revised document.

9.3 Support Resources

TI E2E™ support forums are an engineer's go-to source for fast, verified answers and design help — straight from the experts. Search existing answers or ask your own question to get the quick design help you need.

Linked content is provided "AS IS" by the respective contributors. They do not constitute TI specifications and do not necessarily reflect TI's views; see TI's Terms of Use.

9.4 Trademarks

TI E2E™ is a trademark of Texas Instruments.
All trademarks are the property of their respective owners.

9.5 Electrostatic Discharge Caution



This integrated circuit can be damaged by ESD. Texas Instruments recommends that all integrated circuits be handled with appropriate precautions. Failure to observe proper handling and installation procedures can cause damage.

ESD damage can range from subtle performance degradation to complete device failure. Precision integrated circuits may be more susceptible to damage because very small parametric changes could cause the device not to meet its published specifications.

9.6 Glossary

TI Glossary	This glossary lists and explains terms, acronyms, and definitions.

10 Revision History

NOTE: Page numbers for previous revisions may differ from page numbers in the current version.

DATE	REVISION	NOTES
September 2024	*	Initial Release

11 Mechanical, Packaging, and Orderable Information

The following pages include mechanical, packaging, and orderable information. This information is the most current data available for the designated devices. This data is subject to change without notice and revision of this document. For browser-based versions of this data sheet, refer to the left-hand navigation.

Copyright © 2024 Texas Instruments Incorporated

PACKAGING INFORMATION

Orderable part number	Status (1)	Material type (2)	Package | Pins	Package qty | Carrier	RoHS (3)	Lead finish/ Ball material (4)	MSL rating/ Peak reflow (5)	Op temp (°C)	Part marking (6)
LMG3614REQR	Active	Production	VQFN (REQ) | 38	2000 | LARGE T&R	ROHS Exempt	NIPDAU	Level-3-260C-168HRS	-40 to 125	LMG3614 NNNNC
LMG3614REQR.A	Active	Production	VQFN (REQ) | 38	2000 | LARGE T&R	ROHS Exempt	NIPDAU	Level-3-260C-168HRS	See LMG3614REQR	LMG3614 NNNNC

(1) **Status:** For more details on status, see our product life cycle.

(2) **Material type:** When designated, preproduction parts are prototypes/experimental devices, and are not yet approved or released for full production. Testing and final process, including without limitation quality assurance, reliability performance testing, and/or process qualification, may not yet be complete, and this item is subject to further changes or possible discontinuation. If available for ordering, purchases will be subject to an additional waiver at checkout, and are intended for early internal evaluation purposes only. These items are sold without warranties of any kind.

(3) **RoHS values:** Yes, No, RoHS Exempt. See the TI RoHS Statement for additional information and value definition.

(4) **Lead finish/Ball material:** Parts may have multiple material finish options. Finish options are separated by a vertical ruled line. Lead finish/Ball material values may wrap to two lines if the finish value exceeds the maximum column width.

(5) **MSL rating/Peak reflow:** The moisture sensitivity level ratings and peak solder (reflow) temperatures. In the event that a part has multiple moisture sensitivity ratings, only the lowest level per JEDEC standards is shown. Refer to the shipping label for the actual reflow temperature that will be used to mount the part to the printed circuit board.

(6) **Part marking:** There may be an additional marking, which relates to the logo, the lot trace code information, or the environmental category of the part.

Multiple part markings will be inside parentheses. Only one part marking contained in parentheses and separated by a "~" will appear on a part. If a line is indented then it is a continuation of the previous line and the two combined represent the entire part marking for that device.

Important Information and Disclaimer: The information provided on this page represents TI's knowledge and belief as of the date that it is provided. TI bases its knowledge and belief on information provided by third parties, and makes no representation or warranty as to the accuracy of such information. Efforts are underway to better integrate information from third parties. TI has taken and continues to take reasonable steps to provide representative and accurate information but may not have conducted destructive testing or chemical analysis on incoming materials and chemicals. TI and TI suppliers consider certain information to be proprietary, and thus CAS numbers and other limited information may not be available for release.

In no event shall TI's liability arising out of such information exceed the total purchase price of the TI part(s) at issue in this document sold by TI to Customer on an annual basis.

REQ0038A

PACKAGE OUTLINE

VQFN - 1 mm max height

PLASTIC QUAD FLATPACK - NO LEAD

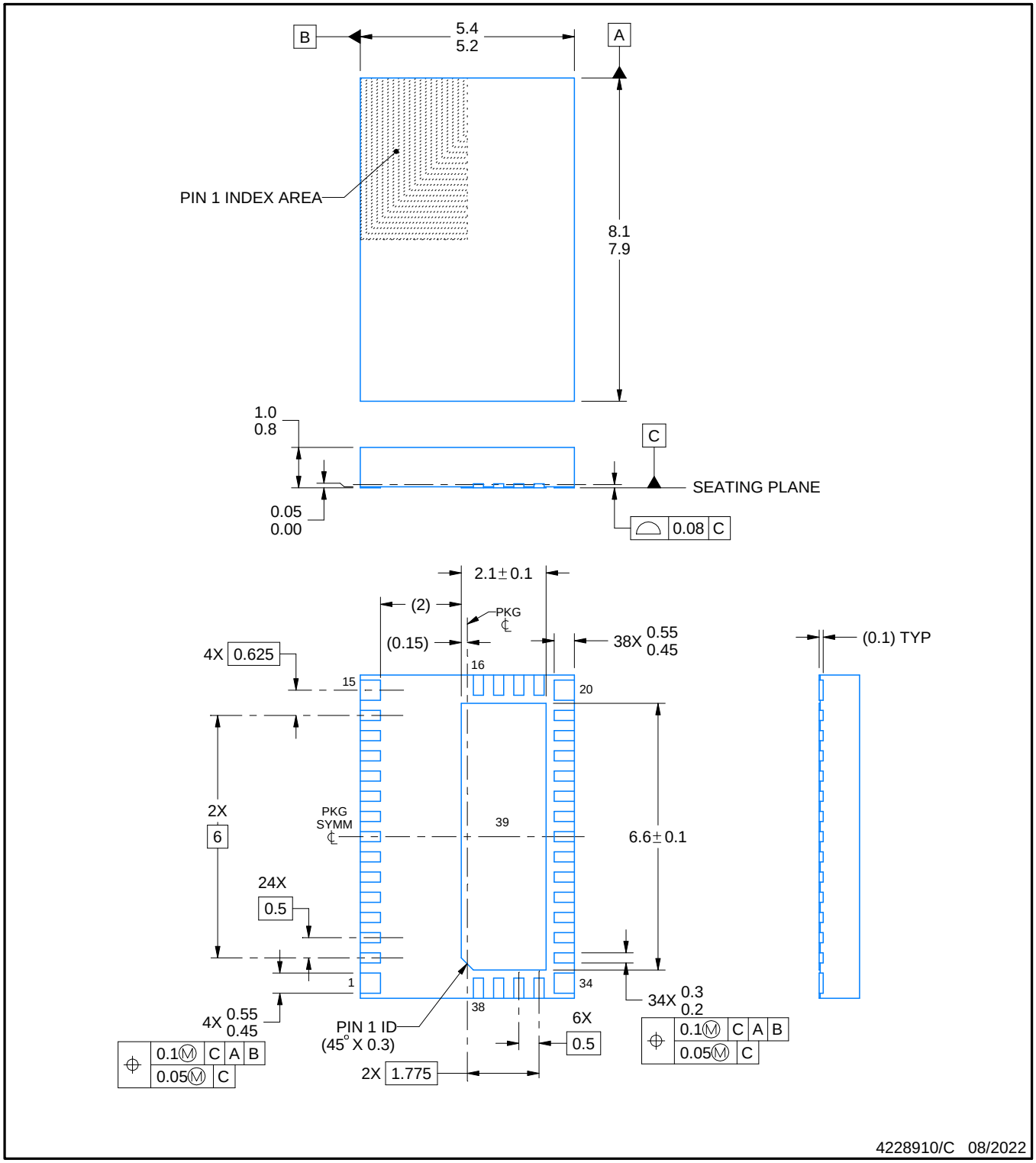

NOTES:

1. All linear dimensions are in millimeters. Any dimensions in parenthesis are for reference only. Dimensioning and tolerancing per ASME Y14.5M.
2. This drawing is subject to change without notice.
3. The package thermal pad must be soldered to the printed circuit board for thermal and mechanical performance.

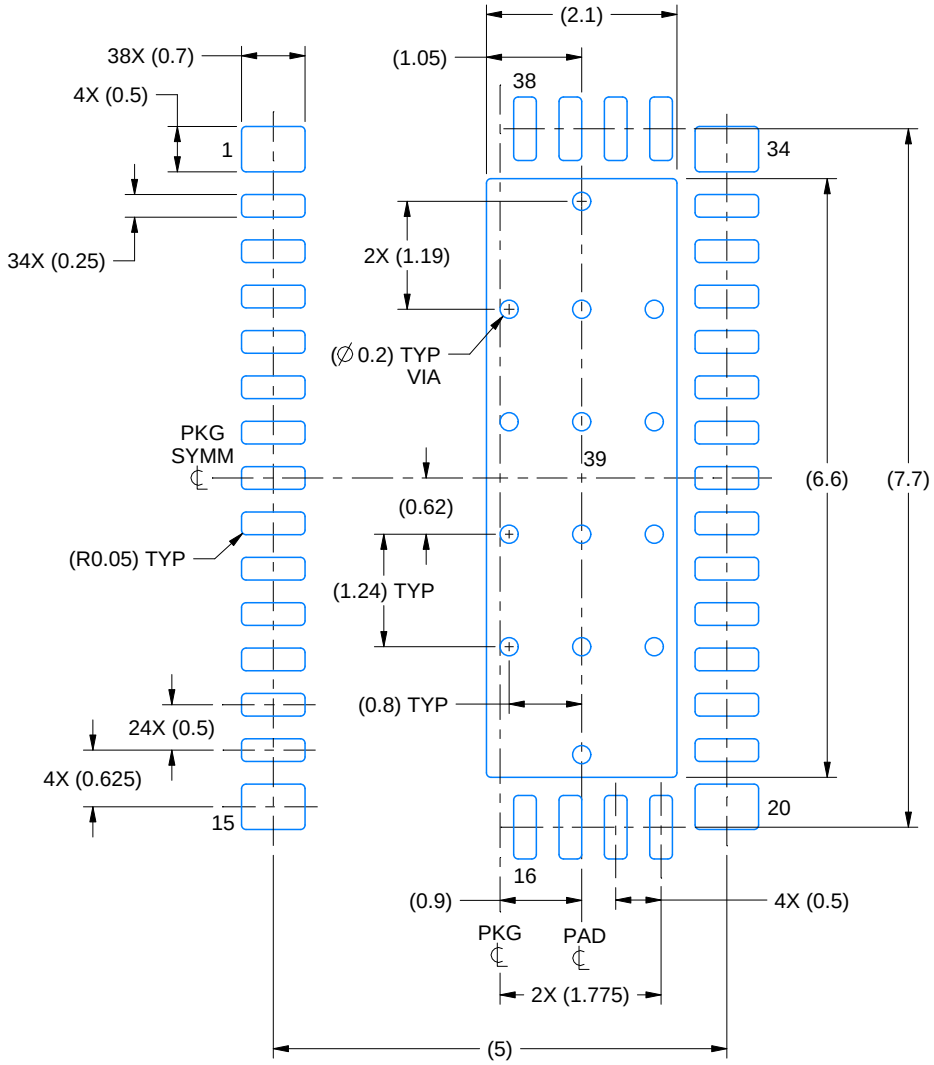

LAND PATTERN EXAMPLE
EXPOSED METAL SHOWN
SCALE:12X



SOLDER MASK DETAILS

4228910/C 08/2022

NOTES: (continued)

4. This package is designed to be soldered to a thermal pad on the board. For more information, see Texas Instruments literature number SLUA271 (www.ti.com/lit/slua271).
5. Vias are optional depending on application, refer to device data sheet. If some or all are implemented, recommended via locations are shown.

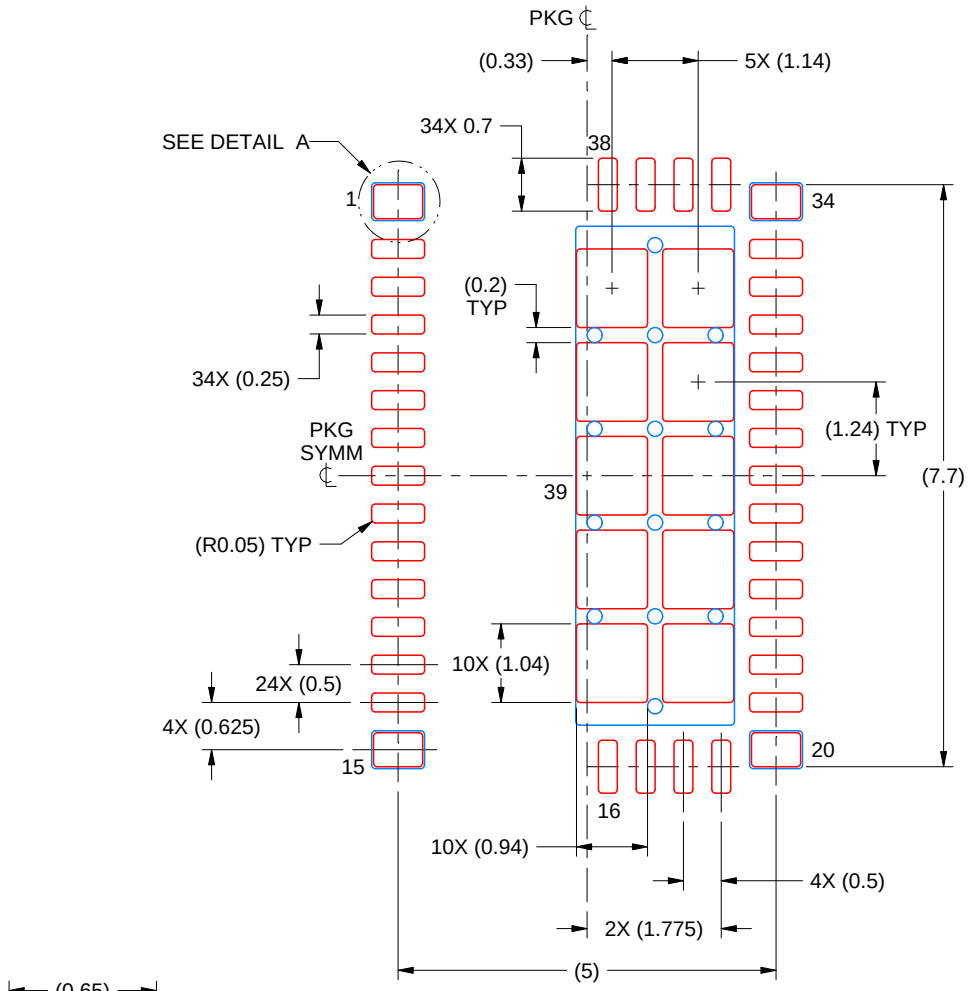

SOLDER PASTE EXAMPLE
BASED ON 0.125 mm THICK STENCIL

EXPOSED PAD 39:
71% PRINTED SOLDER COVERAGE BY AREA UNDER PACKAGE
SCALE:10X

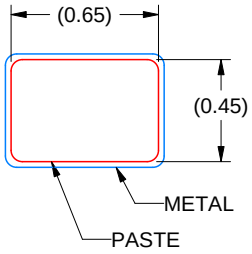

DETAIL A
4X, SCALE: 30X

4228910/C 08/2022

NOTES: (continued)

6. Laser cutting apertures with trapezoidal walls and rounded corners may offer better paste release. IPC-7525 may have alternate design recommendations.

IMPORTANT NOTICE AND DISCLAIMER

TI PROVIDES TECHNICAL AND RELIABILITY DATA (INCLUDING DATASHEETS), DESIGN RESOURCES (INCLUDING REFERENCE DESIGNS), APPLICATION OR OTHER DESIGN ADVICE, WEB TOOLS, SAFETY INFORMATION, AND OTHER RESOURCES “AS IS” AND WITH ALL FAULTS, AND DISCLAIMS ALL WARRANTIES, EXPRESS AND IMPLIED, INCLUDING WITHOUT LIMITATION ANY IMPLIED WARRANTIES OF MERCHANTABILITY, FITNESS FOR A PARTICULAR PURPOSE OR NON-INFRINGEMENT OF THIRD PARTY INTELLECTUAL PROPERTY RIGHTS.

These resources are intended for skilled developers designing with TI products. You are solely responsible for (1) selecting the appropriate TI products for your application, (2) designing, validating and testing your application, and (3) ensuring your application meets applicable standards, and any other safety, security, regulatory or other requirements.

These resources are subject to change without notice. TI grants you permission to use these resources only for development of an application that uses the TI products described in the resource. Other reproduction and display of these resources is prohibited. No license is granted to any other TI intellectual property right or to any third party intellectual property right. TI disclaims responsibility for, and you fully indemnify TI and its representatives against any claims, damages, costs, losses, and liabilities arising out of your use of these resources.

TI’s products are provided subject to TI’s Terms of Sale, TI’s General Quality Guidelines, or other applicable terms available either on ti.com or provided in conjunction with such TI products. TI’s provision of these resources does not expand or otherwise alter TI’s applicable warranties or warranty disclaimers for TI products. Unless TI explicitly designates a product as custom or customer-specified, TI products are standard, catalog, general purpose devices.

TI objects to and rejects any additional or different terms you may propose.

Copyright © 2026, Texas Instruments Incorporated

Last updated 10/2025