LMP91300 Industrial Inductive Proximity Sensor AFE

1 Features

- Post Production Configuration and Calibration
- Programmable Decision Thresholds
- Programmable Hysteresis
- Flexible Overload Protection
- Digital Temperature Compensation
- Integrated LED driver
- Small Form Factor, Supports 4mm Sensors (DSBGA Package)
- Low Power Consumption
- Integrated Voltage Regulator
- 3-Wire Capability
- Supports NPN and PNP Modes
- Normally Open (NO) and Normally Closed (NC) Supported
- 16-bit Resolution Threshold Setting

2 Applications

- Industrial Proximity Detection
- Industrial Production Lines
- Industrial Automation

3 Description

The LMP91300 is a complete analog front end (AFE) optimized for use in industrial inductive proximity sensors. The LMP91300 directly converts the R_P of the external LC tank into a digital value.

Post-manufacturing configuration and calibration is fully supported. The temperature dependence of the sensor is digitally compensated, using an external temperature sensor. The LMP91300 provides programmable thresholds, programmable temperature compensation and programmable oscillation frequency range. Due to its programmability, the LMP91300 can be used with a wide variety of external inductors and its detection thresholds can be adjusted to the desired detection distances.

An internal voltage regulator allows the device to operate with a supply from 6.5V to 40V. The output can be programmed to drive an external transistor in either NPN or PNP mode.

Available in 4mm × 5mm 24-terminal WQFN and 2.05mm × 2.67mm 20-terminal DSBGA packages, the LMP91300 operates from -40°C to +125°C.

Device Information

ORDER NUMBER	PACKAGE	BODY SIZE
LMP91300NHZ	WQFN (24)	4mm x 5mm
LMP91300YZR	DSBGA (20)	2.05mm x 2.67mm

3-Wire PNP Configuration

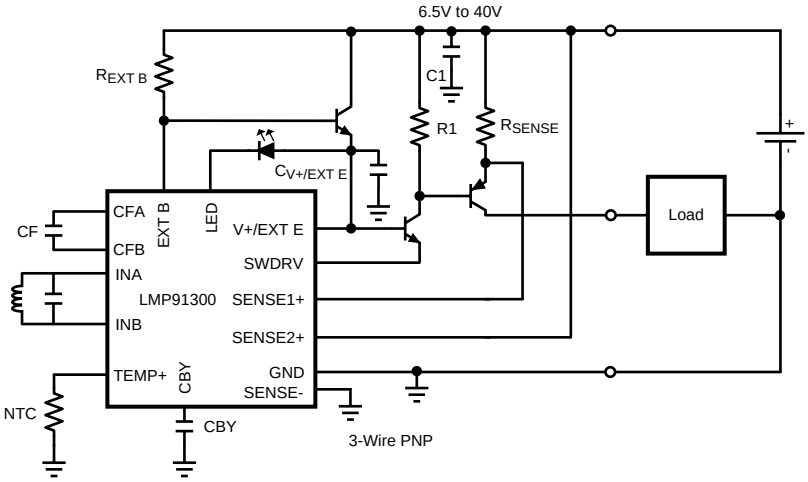

An IMPORTANT NOTICE at the end of this data sheet addresses availability, warranty, changes, use in safety-critical applications, intellectual property matters and other important disclaimers. PRODUCTION DATA.

Table of Contents

1 Features ... 1
2 Applications ... 1
3 Description ... 1
4 Revision History ... 2
5 Terminal Configuration and Functions ... 3
6 Specifications ... 5
6.1 Absolute Maximum Ratings ... 5
6.2 Handling Ratings ... 5
6.3 Recommended Operating Conditions ... 5
6.4 Thermal Information ... 5
6.5 Electrical Characteristics ... 6
6.6 Timing Requirements ... 7
6.7 Typical Characteristics ... 8
7 Detailed Description ... 11
7.1 Overview ... 11
7.2 Functional Block Diagram ... 11
7.3 Feature Description ... 11
7.4 Device Functional Modes ... 14
7.5 Programming ... 14
7.6 Register Maps ... 18
8 Application and Implementation ... 28
8.1 Application Information ... 28
8.2 Typical Application ... 28
9 Power Supply Recommendations ... 35
10 Layout ... 35
10.1 Layout Guidelines ... 35
10.2 Layout Example ... 36
11 Device and Documentation Support ... 37
11.1 Trademarks ... 37
11.2 Electrostatic Discharge Caution ... 37
11.3 Glossary ... 37
12 Mechanical, Packaging, and Orderable Information ... 37

4 Revision History

NOTE: Page numbers for previous revisions may differ from page numbers in the current version.

Changes from Revision A (September 2013) to Revision B	Page
• Changed layout to new datasheet format	1
• Added Burn Current Specification.	6
• Added additional information to Low R_P, Close Target, Under Range Switch Enable section.	12
• Changed typo.	31
• Added additional information to R_{EXTB} section.	31

Changes from Original (September 2013) to Revision A	Page
• Changed to Production Data	1
• Added CSP package	3

Copyright © 2013–2014, Texas Instruments Incorporated

5 Terminal Configuration and Functions

LMP91300 WQFN
Top View

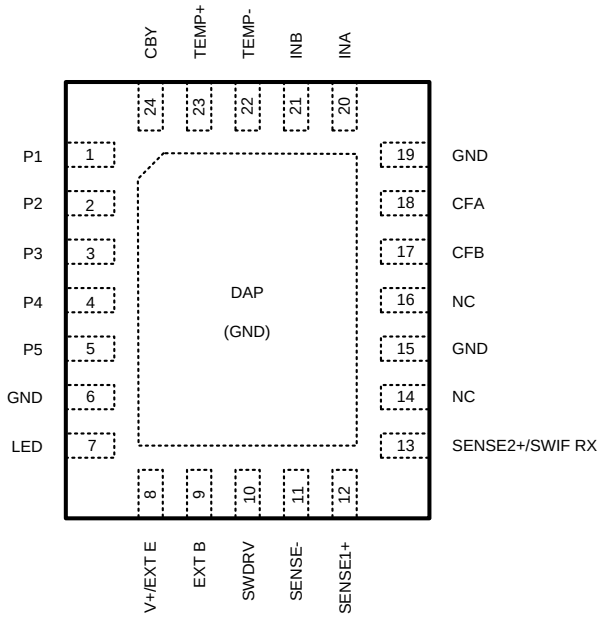

LMP91300 WQFN Terminal Functions

TERMINAL NUMBER	NAME	TYPE	DESCRIPTION
1-5	P1-5	G	Connect to Ground
6	GND	G	Board Ground
7	LED	O	LED Driver Output
8	V+/EXT E	P	Chip V+/External transistor, emitter
9	EXT B	P	External transistor, base
10	SWDRV	O	Drive for external transistor switch
11	SENSE-	I	Negative sense Input
12	SENSE1+	I	Positive sense Input
13	SENSE2+/SWIF RX	I	Positive sense Input and Single Wire Interface receive
14	NC	N/A	No connect
15	GND	G	Board ground
16	NC	N/A	No connect
17	CFB	I	Filter capacitor value based on sensor oscillation frequency
18	CFA	I	Filter capacitor value based on sensor oscillation frequency
19	GND	G	Board ground
20	INA	I	External LC tank
21	INB	I	External LC tank
22	TEMP-	G	NTC ground, connect to board ground
23	TEMP+	I	Analog Temperature Sensor Input
24	CBY	O	Bypass capacitor (56nF)
DAP	DAP	G	Connect to Ground

Copyright © 2013–2014, Texas Instruments Incorporated

LMP91300 DSBGA

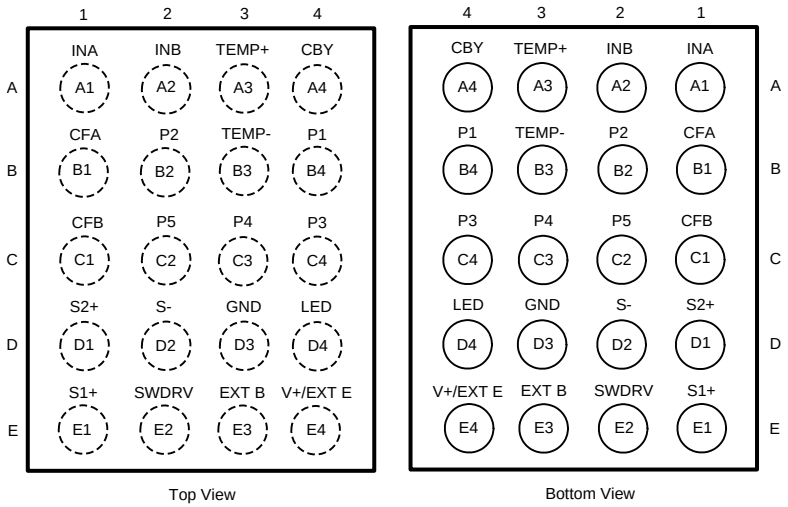

LMP91300 DSBGA Terminal Functions

TERMINAL NUMBER	NAME	TYPE	DESCRIPTION
A1	INA	I	External LC tank
A2	INB	I	External LC tank
A3	TEMP+	I	Analog Temperature Sensor Input
A4	CBY	O	Bypass capacitor (56nF)
B1	CFA	I	Filter capacitor value based on sensor oscillation frequency
B2	P2	G	Connect to Ground
B3	TEMP-	G	NTC ground, connect to board ground
B4	P1	G	Connect to Ground
C1	CFB	I	Filter capacitor value based on sensor oscillation frequency
C2	P5	G	Connect to Ground
C3	P4	G	Connect to Ground
C4	P3	G	Connect to Ground
D1	SENSE2+/SWIF RX	I	Positive sense Input and Single Wire Interface receive
D2	SENSE-	I	Negative sense Input
D3	GND	G	Board ground
D4	LED	O	LED Driver Output
E1	SENSE1+	I	Positive sense Input
E2	SWDRV	O	Drive for external transistor switch
E3	EXT B	P	External transistor, base
E4	V+/EXT E	P	Chip V+/External transistor, emitter

Copyright © 2013–2014, Texas Instruments Incorporated

6 Specifications

6.1 Absolute Maximum Ratings (1)

Over operating free-air temperature range (unless otherwise noted)

	MIN	MAX	UNIT
Voltage at Terminals 1-5, 7, 10, 11, 17, 18 (B1, B2, B4, C1, C2, C3, C4, D2, D4, E2)		(V+) + 0.3	V
Voltage at Terminals 6, 15, 19, 22 (B3, D3)		0.3	V
Voltage at Terminal 8 (E4)		6	V
Voltage at Terminal 9 (E3)		7	V
Voltage at Terminals 12, 13 (D1, E1)		48	V
Current at Terminals 20, 21 (A1, A2)		8	mA
Voltage at Terminals 23, 24 (A3, A4)		1.6	V
Operating Temperature, T_A	−40	+125	°C
Junction Temperature, T_J (2)		+150	°C

(1) Stresses beyond those listed under *Absolute Maximum Ratings* may cause permanent damage to the device. These are stress ratings only, and functional operation of the device at these or any other conditions beyond those indicated under *Recommended Operating Conditions* is not implied. Exposure to absolute-maximum-rated conditions for extended periods may affect device reliability.
(2) The maximum power dissipation is a function of $T_{J(MAX)}$, θ_{JA}, and T_A. The maximum allowable power dissipation at any ambient temperature is $P_D = (T_{J(MAX)} - T_A)/ \theta_{JA}$. All numbers apply for packages soldered directly onto a PC board.

6.2 Handling Ratings

		MIN	MAX	UNIT
T_{STG}	Storage Temperature	−65	+150	°C
HBM (1) (2)	Human Body Model		2000	V
CDM (1) (3)	Charge-Device Model		500	V

(1) Electrostatic discharge (ESD) to measure device sensitivity and immunity to damage caused by assembly line electrostatic discharges in to the device.
(2) Level listed above is the passing level per ANSI, ESDA, and JEDEC JS-001. JEDEC document JEP155 states that 500-V HBM allows safe manufacturing with a standard ESD control process.
(3) Level listed above is the passing level per EIA-JEDEC JESD22-C101. JEDEC document JEP157 states that 250-V CDM allows safe manufacturing with a standard ESD control process.

6.3 Recommended Operating Conditions

Over operating free-air temperature range (unless otherwise noted)

		MIN	NOM	MAX	UNIT
V_{LOOP}	Loop Voltage	6.5		40	V

6.4 Thermal Information (1) (2)

Over operating free-air temperature range (unless otherwise noted)

PARAMETER		TEST CONDITIONS	MIN	TYP	MAX	UNIT
θ_{JA}	Package Thermal Impedance	24-Terminal WQFN		33.2		°C/W
θ_{JA}	Package Thermal Impedance	20-Terminal DSBGA		46		°C/W

(1) The maximum power dissipation is a function of $T_{J(MAX)}$, θ_{JA}, and T_A. The maximum allowable power dissipation at any ambient temperature is $P_D = (T_{J(MAX)} - T_A)/ \theta_{JA}$. All numbers apply for packages soldered directly onto a PC board.
(2) The package thermal impedance is calculated in accordance with JESD 51-7.

Copyright © 2013–2014, Texas Instruments Incorporated

6.5 Electrical Characteristics (1)(2)

Unless otherwise specified, all limits are ensured at $T_A = T_J = 25°C$, Loop Voltage = 24V.(3). **Boldface** limits apply at the temperature extremes.

SYMBOL	PARAMETER	CONDITIONS	MIN (4)	TYP (5)	MAX (4)	UNIT
POWER SUPPLY						
I_{V+}	Supply Current	Does not include external currents such as LED, SWDRV, and LC tank current(6)(3)		3		mA
I_{BURN}	Burn Current	Additional current needed to burn registers		3.6		mA
t_{START}	Power On Start Time	LC Tank oscillation = 1MHz, RESPONSE_TIME = 001b (96), measured time starting from when supply is at 90% of operational value.(7)			**50**	ms
OSCILLATOR						
f_{MIN}	Minimum Oscillation Frequency			0.005		MHz
f_{MAX}	Maximum Oscillation Frequency			5		MHz
OSC_{AMP1V}	Oscillator Amplitude	OSC_AMP = 00b		1		V_{PP}
OSC_{AMP2V}	Oscillator Amplitude	OSC_AMP = 01b		2		V_{PP}
OSC_{AMP4V}	Oscillator Amplitude	OSC_AMP = 10b		4		V_{PP}
t_{rec}	Recovery Time	Oscillation start up time after low R_P is removed.		10		oscillator periods
SENSOR						
R_{PMIN}	Minimum R_P Value of LC Tank	See OSC_CONFIG_2 entry in the Register Maps section.		798		Ω
R_{PMAX}	Maximum R_P Value of LC Tank	See OSC_CONFIG_2 entry in the Register Maps section.		3.93M		Ω
DETECTOR						
t_{RESP}	Response time	Settling time of digital filter to R_P step. See RESPONSE_TIME in registers 0x71 and 0x77.	96		6144	oscillator periods
OUTPUT DRIVER						
$I_{SOURCE, SINK}$	Current source and sink capability on SWDRV Terminal	SWDRV_CURRENT = 00b	2	2.5	3	mA
		SWDRV_CURRENT = 01b	3.25	3.75	4.25	
		SWDRV_CURRENT = 10b	4.5	5	5.5	
		SWDRV_CURRENT = 11b	9	10	11	
OVERLOAD PROTECTION						
	Over Current Detection Threshold	NPN Configuration, Using external SENSE resistor	**279**	310	**341**	mV
	Over Current Detection Threshold	PNP Configuration, Using external SENSE resistor	**248**	310	**376**	mV
	Over Current Limit	NPN Configuration	**432**	480	**528**	mV
	Over Current Limit	PNP Configuration	**413**	480	**547**	mV

(1) Electrical Characteristics Table values apply only for factory testing conditions at the temperature indicated. Factory testing conditions result in very limited self-heating of the device such that $T_J = T_A$. Parametric performance shown in the electrical tables is not ensured under conditions of internal self-heating where $T_J > T_A$.
(2) Electrical Characteristics apply only when SWIF is inactive. Glitches may appear on SWDRV during a SWIF transmission.
(3) There are tradeoffs between power consumption, switching speed, R_P to Digital conversion and oscillation frequency.
(4) Limits are ensured by testing, design, or statistical analysis at 25°C. Limits over the operating temperature range are ensured through correlations using statistical quality control (SQC) method.
(5) Typical values represent the most likely parametric norm as determined at the time of characterization. Actual typical values may vary over time and will also depend on the application and configuration. The typical values are not tested and are not ensured on shipped production material.
(6) Supply current is higher when there is not an LC tank connected to Terminals INA and INB because an internal protection circuit is enabled. See the Supply Current vs Supply Voltage graphs in the Typical Characteristics section.
(7) The loop supply must be able to momentarily supply 30mA.

Copyright © 2013–2014, Texas Instruments Incorporated

Electrical Characteristics [1][2] (continued)

Unless otherwise specified, all limits are ensured at $T_A = T_J = 25°C$, Loop Voltage = 24V.[3]. **Boldface** limits apply at the temperature extremes.

SYMBOL	PARAMETER	CONDITIONS	MIN (4)	TYP (5)	MAX (4)	UNIT
INPUT SHORT CONDITION						
t_{OUT}	Output Switching	Output high time in short condition	**25**	30	**35**	µs
$duty_{0.1\%}$	Output duty cycle during short condition	During short, SHORTCKT_DUTY_CYCLE = 0b		0.1%		
$duty_{0.8\%}$	Output duty cycle during short condition	During short, SHORTCKT_DUTY_CYCLE = 1b		0.8%		
LED_{BLINK}	LED Blinking Rate	Blinking rate of the LED during a short condition or ECC error		2		Hz
LED DRIVER						
	Sink Current	LED_CURRENT = 0b	2	2.5	3	mA
	Sink Current	LED_CURRENT = 1b	4	5	6	mA
TEMPERATURE SENSOR						
	Accuracy	Accuracy of the LMP91300 only, does not include the accuracy of the NTC	**-2.5**	1	**2.5**	°C

6.6 Timing Requirements

SWIF TIMING	MIN	TYP	MAX	UNIT
Communication rate	1		10	kbits/s
“D” symbol duty cycle: THD/TP		½		
“0” symbol duty cycle: TH0/TP		¼		
“1” symbol duty cycle: TH1/TP		¾		

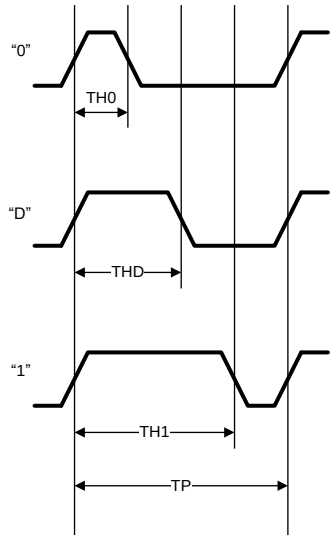

Figure 1. Single-Wire Interface (SWIF) Timing Diagram

6.7 Typical Characteristics

At $T_A = T_J = 25°C$, Loop Voltage = 20V to 36V, unless otherwise specified.

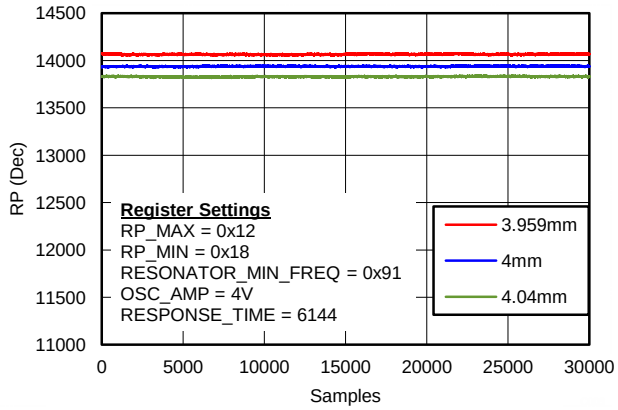

Figure 2. R_P Resolution

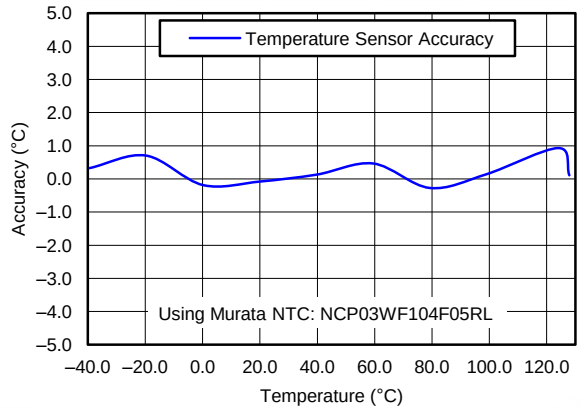

Figure 3. Temperature Accuracy

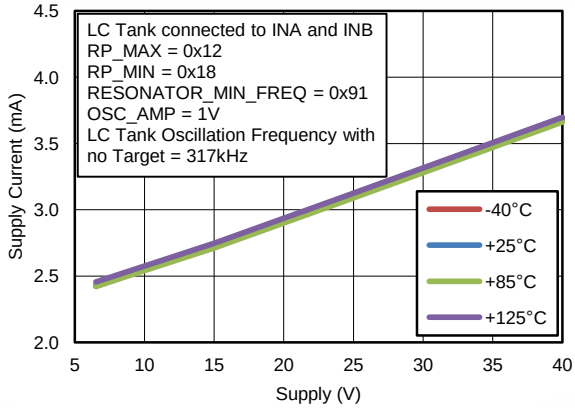

Figure 4. Supply Current vs Supply Voltage

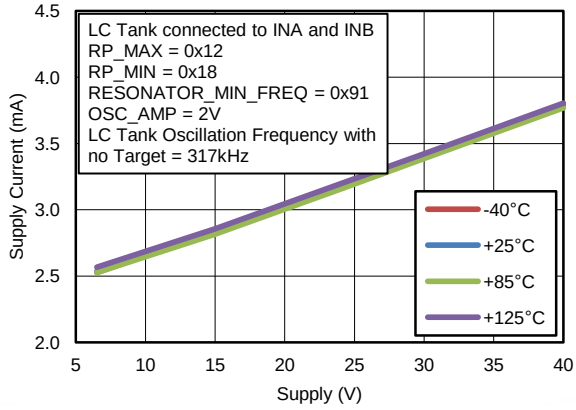

Figure 5. Supply Current vs Supply Voltage

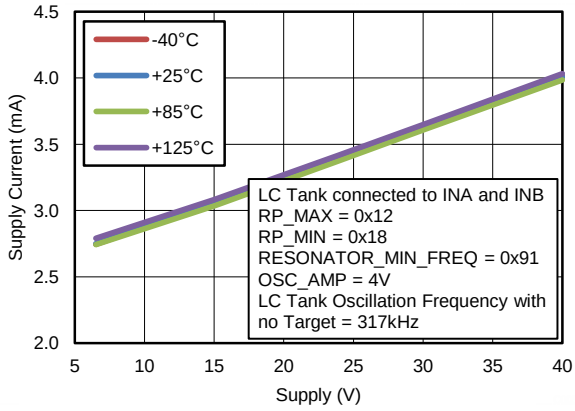

Figure 6. Supply Current vs Supply Voltage

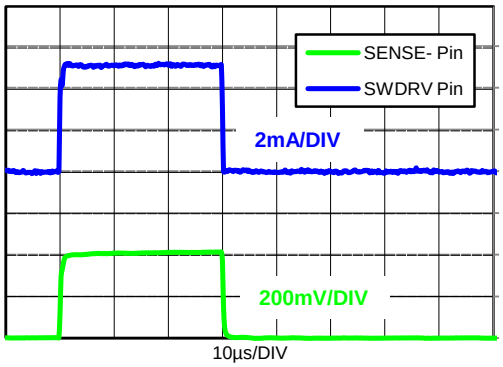

Figure 7. SWDRV and SENSE- Waveforms During Short Condition, SHORTCKT_DUTY_CYCLE = 0.1% Or 0.8%

Copyright © 2013–2014, Texas Instruments Incorporated

Typical Characteristics (continued)

At $T_A = T_J = 25°C$, Loop Voltage = 20V to 36V, unless otherwise specified.

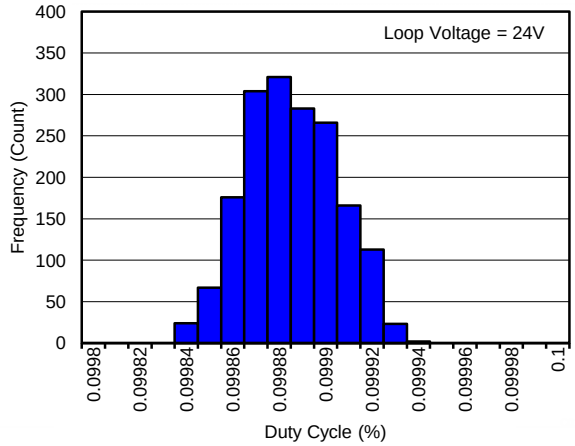

Figure 8. 0.1% Duty Cycle Distribution, PNP Mode

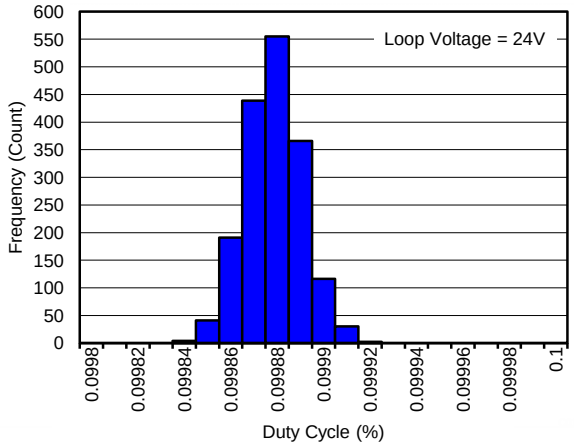

Figure 9. 0.1% Duty Cycle Distribution, NPN Mode

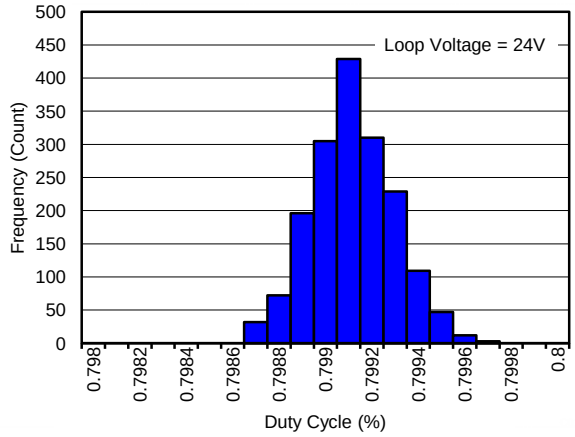

Figure 10. 0.8% Duty Cycle Distribution, PNP Mode

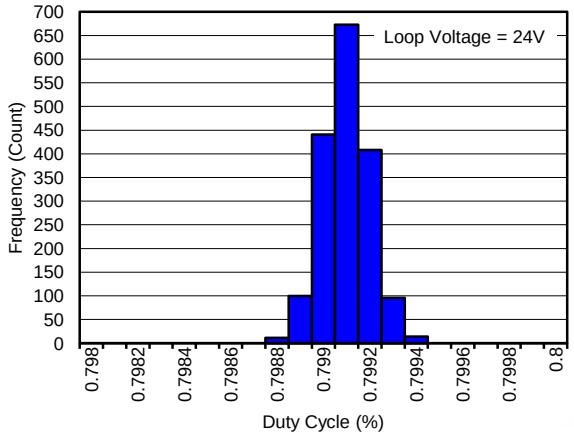

Figure 11. 0.8% Duty Cycle Distribution, NPN Mode

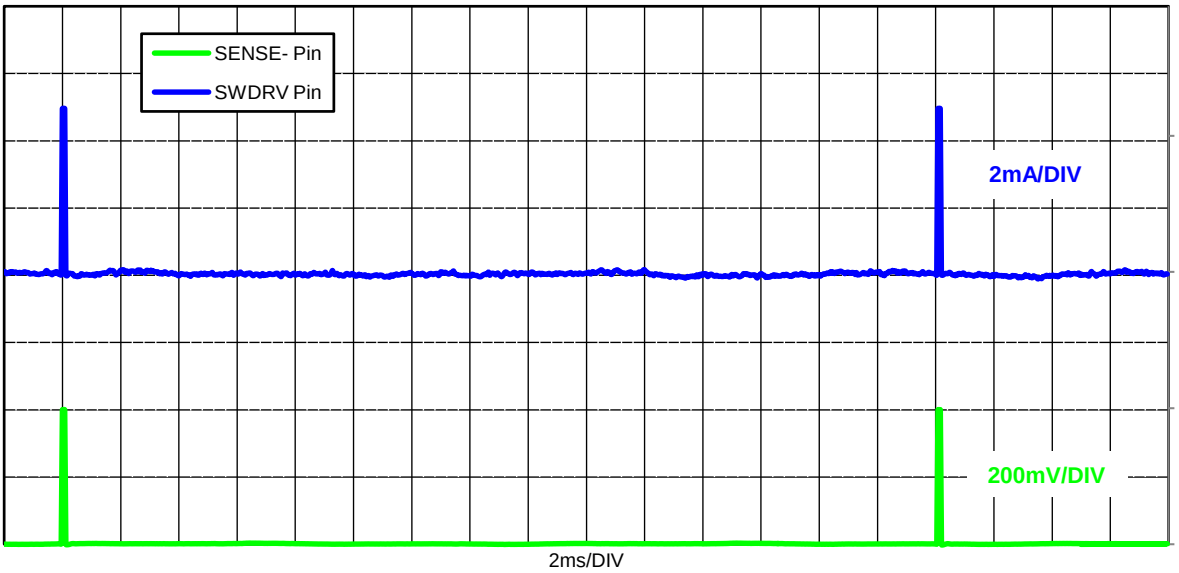

Figure 12. SWDRV and SENSE- Waveforms During Short Condition, SHORTCKT_DUTY_CYCLE = 0.1%

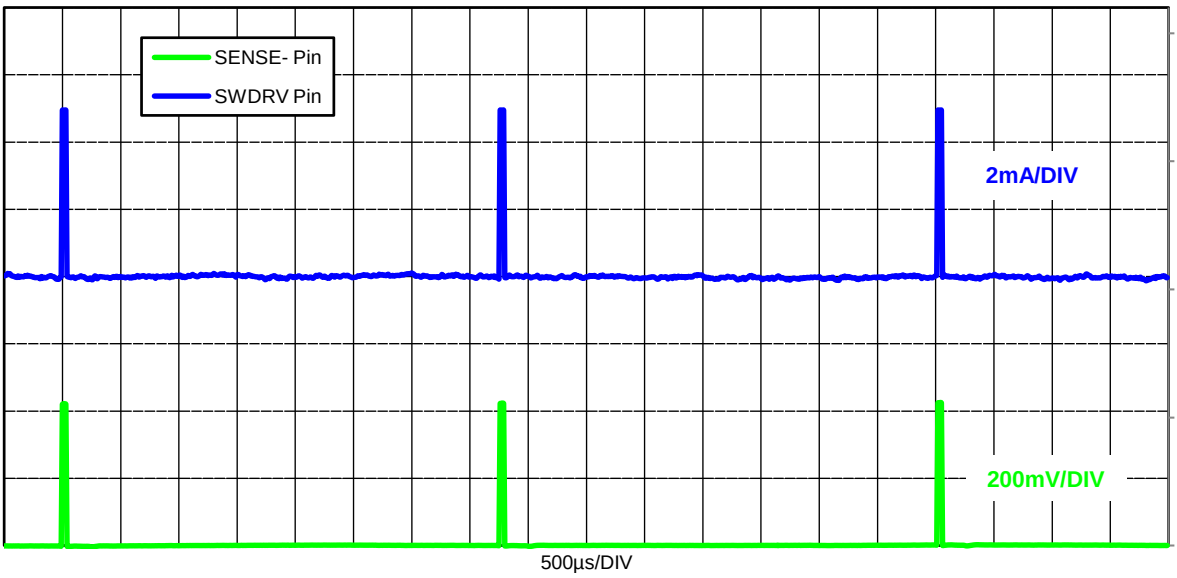

Figure 13. SWDRV and SENSE- Waveforms During Short Condition, SHORTCKT_DUTY_CYCLE = 0.8%

Copyright © 2013–2014, Texas Instruments Incorporated

7 Detailed Description

7.1 Overview

The LMP91300 is a complete analog front end (AFE) optimized for use in inductive proximity sensors. The LMP91300 detects the presence of a metal object based on the R_P change of an LC oscillator, depending on the distance of the metal object.

The LMP91300 is based on a novel architecture that directly converts the R_P of the external LC tank to a digital value. Post manufacturing configuration and calibration is fully supported by the architecture of the LM91300. The temperature dependence of the sensor is digitally compensated, using an external temperature sensor. The LMP91300 provides programmable thresholds, programmable temperature compensation and programmable oscillation frequency range. Due to its programmability, the LMP91300 can be used with a wide variety of external inductors and its detection thresholds can be adjusted to the desired detection distances. The internal LDO has a high input voltage capability, while the architecture enables the use of a low supply as well. The output can be programmed to drive an external transistor in either NPN or PNP mode.

7.2 Functional Block Diagram

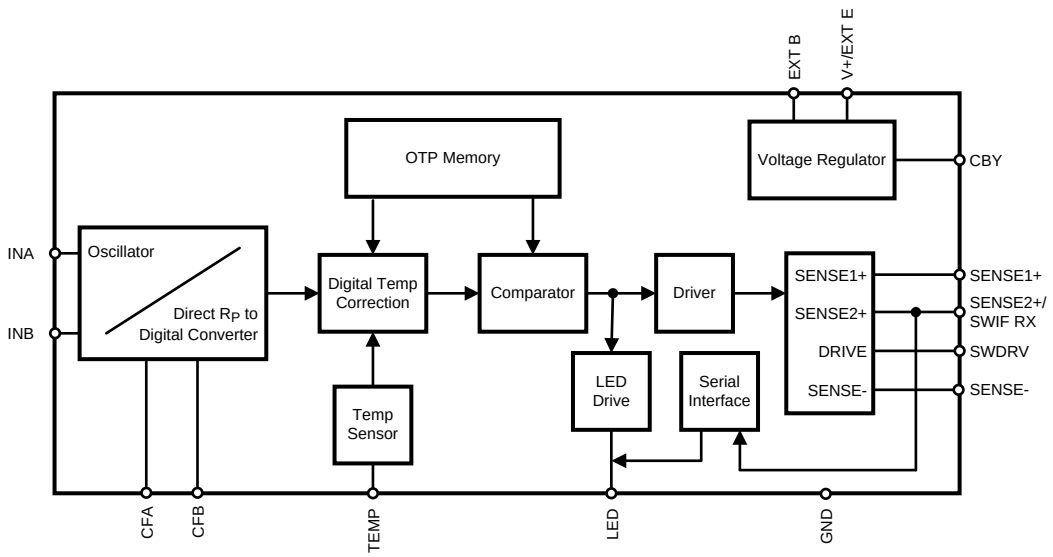

7.3 Feature Description

7.3.1 Oscillator

The oscillator, using an external LC tank (the detector), provides a wide oscillation range from 5kHz to 5MHz. The R_P upper and lower limits are programmable, to support a wide range of LC combinations. Within the R_P range of the LC tank, the oscillator amplitude is kept constant. When the LC tank R_P drops below the lower programmed limit of R_P the LMP91300 detects that the target is too close, the amplitude is reduced and the detector output will rail. See Figure 14.

Feature Description (continued)

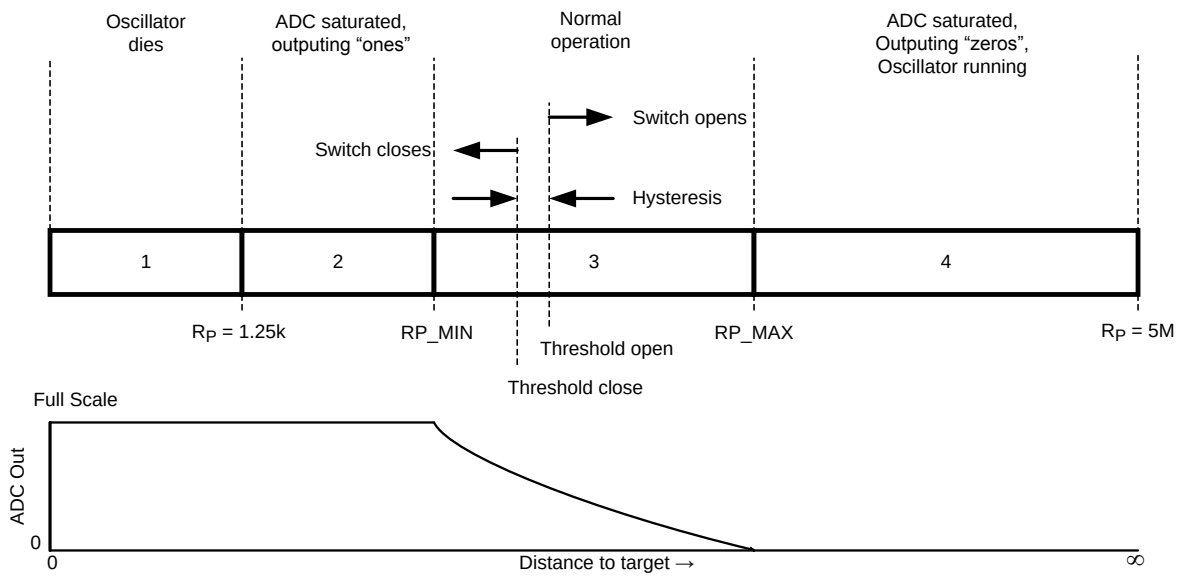

Figure 14. Operating Region

7.3.2 Detection

The R_P of the external LC tank is directly converted to a digital signal. With this approach the only temperature compensation needed is that for R_P, which is done through the Look Up Table (Registers 0x00 to 0x5D).

7.3.3 Comparator

The internal digital comparator accepts the signal from the R_P to digital converter, after temperature compensation, and makes a decision, based on the value written to the DET_H_MSB and DET_H_ LSB registers. Programmable hysteresis is set by the value in the DET_L_MSB and DET_L_ LSB registers. The detection threshold can be set within the programmed R_P range.

7.3.4 Low R_P, Close Target, Under Range Switch Enable

If R_P drops below the detectable range, the LMP91300 remains functional. The following applies if at least one temperature conversion has been completed:

For low R_P start up (for example, if the target is in contact with the sensing coil when the part is powered on) UNDER_RANGE_SWITCH_EN must be set to 1 for the switch to be enabled. If UNDER_RANGE_SWITCH_EN is set to 0, the startup state is undefined when the sensor $R_P < R_{PMIN}$ (for example, if the target is in contact with the sensing coil).

1. If R_P < 798Ω (for example, the metal plate is against the sensor) before the fourth conversion of the R_P to digital converter (after Power On Reset) the switch will be activated regardless of the UNDER_RANGE_SWITCH_EN setting.
2. If R_P < 798Ω after the fourth conversion the switch state depends on the setting of UNDER_RANGE_SWITCH_EN.
   (a) If UNDER_RANGE_SWITCH_EN = 1: The switch will be enabled.
   (b) If UNDER_RANGE_SWITCH_EN = 0: The previous switch state will be held until the oscillation restarts (R_P > 798Ω) and enough time has passed for a conversion to update the switch status.

If a temperature conversion has not been completed the switch state will not be changed.

The LMP91300 oscillator will begin to oscillate in less than 10 oscillator periods once the low R_P condition is removed.

Copyright © 2013–2014, Texas Instruments Incorporated

Feature Description (continued)

7.3.5 Programming The Switching Point And Hysteresis

The typical procedure is that the user puts a target metal at the target distance in front of the manufactured sensor system. The PROXIMITY_MSB and Proximity LSB registers are read and the DET_H_MSB and DET_H_ LSB registers are written with a value that causes the LMP91300 to switch. The metal target is then moved to another distance, farther away than the first distance, the PROXIMITY_MSB and Proximity LSB registers are read and a value is written to the DET_L_MSB and DET_L_ LSB registers that causes the LMP91300 to switch the external transistor off.

7.3.6 Temperature Compensation

As most of the integrated electronics are in the digital domain, close to perfect performance of the LMP91300 over temperature can be expected. As the R_P factor of the external LC tank is measured, only the temperature coefficient of the LC tank losses need to be compensated for. The LMP91300 offers a digital temperature compensation feature that provides an accurate R_P detection of the external LC tank when losses are introduced due to ambient temperature changes in the operating environment. This can be done by calibrating the Temperature Look-Up Table (LUT) located in registers 0x00 to 0x5D. The calibration involves the user generating gain correction factor coefficients (GCF) and is discussed in detail in the Look-Up Table Calibration section. These registers hold 2 bytes of information representing temperatures ranging from -48°C to 136°C in 4°C increments. The LMP91300 uses linear interpolation to provide 1°C temperature steps in between these 4°C points to improve accuracy. After the LUT has been properly programmed, the Detection Threshold registers need to be programmed for the switching distances desired. The external temperature sensor and the temperature coefficients stored in the LUT produce a functional temperature compensation system. The LUT was designed for an NTC with a beta factor β = 4250 such as the Murata NCP03WF104F05RL. Any other NTC used in the design will require additional adjustments which are explained in the Look-Up Table Calibration section.

7.3.7 Power Supply

An internal regulator with an external NPN transistor is used to power the LMP91300 directly from the loop.

7.3.8 LED Drive

An external LED can be driven with the LED terminal. Red and Green LEDs are supported. The LED current can be programmed to 2.5mA or 5 mA. This LED indicates the state of the sensor. Typically the LED is on if the switch is closed, but this is programmable in the OUT_CONFIG_INIT and OUT_CONFIG_FNL registers. This LED will also indicate an output overload condition situation or ECC error.

7.3.9 SWDRV

The LMP91300 drives an external transistor, to implement a NPN or PNP function. During power up the drive terminal (SWDRV) is pulled down using a high resistance to avoid turning on the external transistor, until the LMP91300 is fully functional.

7.3.10 Overload Protection

Short circuit detection and overload protection are implemented in the LMP91300, using an external SENSE resistor, R_{SENSE}. When the voltage drop across R_{SENSE} exceeds about 310 mV the LMP91300 detects a short circuit condition. If this condition persists, the switch is toggled between being open and closed. The switch will be on for about 30µs, with a duty cycle as set in OUT_CONFIG_INIT (0x72) bit 0 (SHORTCKT_DUTY_CYCLE) or OUT_CONFIG_FNL (0x78) bit 0 (SHORTCKT_DUTY_CYCLE) to protect the external BJT. For example, if SHORTCKT_DUTY_CYCLE is set to 0.1% the switch drive will be on for 30µs and off for 29.97ms (t_{OFF} = (30µs/0.1%) - 30µs). During a short circuit event, the load current is limited to I=480mV/R_{SENSE}. The LMP91300 will come out of the overload protection mode once the drop across R_{SENSE} is less than 310mV.

Feature Description (continued)

When designing the overload protection circuitry the user must select the appropriate transistors, SWDRV current setting, R_{SENSE} resistor and short circuit duty cycle. The transistor should be selected to handle the load current and supply voltage both during normal operation and during an overload situation to ensure that it remains in the safe operating region at all times. The R_{SENSE} resistor should be chosen to set the current limit and over current threshold. The SWDRV current should be selected to ensure that during a short circuit condition the SWDRV current is capable of sourcing or sinking the programmed current depending on NPN or PNP configuration. This ensures that the short circuit control loop remains regulated and enforces the current limit and over current threshold. Once overload protection design is complete the user has the option to choose between the two duty cycle options.

7.4 Device Functional Modes

NPN and PNP 3 wire configurations as shown in the Typical Application section are supported by the LMP91300.

7.5 Programming

Through the 2-wire loop connection, all parameters such as the LUT, operation modes, output modes and detection thresholds can be programmed after the sensor manufacturing process is finished. The LMP91300 is one time programmable in a 3 step process. During the manufacturing process the configuration and calibration data will be written to the device and then a special code will be written that disables communication.

7.5.1 Burning Programmed Values Into The Registers

There are three steps to burning values into the registers.

1. Burn the Temperature Look Up Table data (0x00 – 0x5D), initial registers, device information registers, and configuration registers (0x66 – 0x72).
   (a) Use SWIF to program values into these registers (0x00 – 0x72).
   (b) Use SWIF to write 0x08 to register 0x7F to permanently burn the values into the registers.
   (c) Optional: Wait 300ms and read back the status register (0x7E). It should read 0x21 if the registers have been successfully burned.
2. Burn final registers (0x73 – 0x78).
   (a) Use SWIF to program values into these registers (0x73 – 0x78).
   (b) Use SWIF to write 0x10 to register 0x7F to permanently burn the values into the registers.
   (c) Optional: Wait 300ms and read back the status register (0x7E). It should read 0x23 if the registers have been successfully burned.
3. Burn SWIF mode. After the device has been programmed the write function using SWIF needs to be disabled.
   (a) Read Only. The SWIF write function is disabled but registers can still be read back using SWIF. Use SWIF to write 0x40 to address 0x7F. After the device is power cycled it will be read only.
   (b) Disabled. The SWIF is completely disabled, both write and read functions are disabled. Use SWIF to write 0x80 to address 0x7F. After the device is power cycled SWIF will be disabled.
   (c) Optional: Before power cycling the device wait 300ms and read back the status register (0x7E). It should read 0x27 for read only or 0x2F for SWIF disabled.
4. 4. It is possible to combine steps 1 and 2 and burn the Look Up Table, initial registers, device information registers, configuration registers, and final registers (0x00 – 0x78) at one time.
   (a) Use SWIF to program values into these registers (0x00 – 0x78).
   (b) Use SWIF to write 0x20 to register 0x7F to permanently burn the values into the registers.
   (c) Optional: Wait 300ms and read back the status register (0x7E). It should read 0x23 if the registers have been successfully burned.

Copyright © 2013–2014, Texas Instruments Incorporated

Programming (continued)

7.5.2 Single-Wire Interface (SWIF)

The LMP91300 uses a bi-directional Single Wire Interface protocol to program and read registers. To communicate with the LMP91300 (slave) through the SWIF interface, the micro controller (master) must transmit (write) data through the DC loop supply voltage that should be set to +8V during programming or communication. This superimposed signal of pulses transitions between 8V and 12V is on top of the +8V DC loop supply voltage. When the master transmits data into the LMP91300 the signal propagates into the SENSE2+ terminal through the supply. The master receives data from the LMP91300 through the LED terminal in the form of alternating current pulses. These current pulses will be 5mA in amplitude. The LED terminal must be connected to ground, either through an LED or directly connected to ground for the LMP91300 to talk to the master.

The communication scheme utilizes various pulse width waveforms to represent different symbols as shown in Figure 15. The binary representation of a zero bit is represented by a 25% pulse duty cycle, a one bit is represented by a 75% pulse duty cycle, and idle bit is represented by a 50% duty cycle. All pulses transmitted must fall within the pulse width specifications provided within the electrical characteristics table.

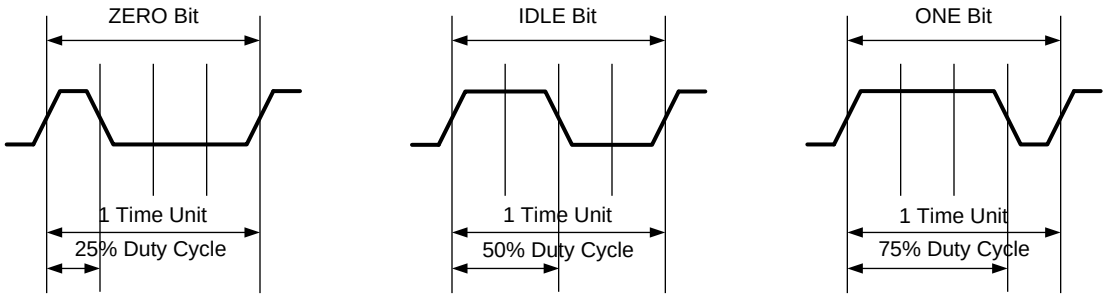

Figure 15. Single Wire Interface (SWIF) Symbol Diagram

The LMP91300 can be programmed at an input transfer bit rate between 1kbps to 10kbps. There is no acknowledge signal during the input data transfer so the master should read back the data to ensure data integrity and a successful data transfer has occurred. A read transaction is executed by the master transmitting data to configure the pointer register resulting in data output transfer by the slave. The LMP91300 transmits read back data at a speed of about 7kbps.

7.5.2.1 Write Operation

A frame begins with a minimum of one IDLE bit. To perform a write operation, the master must send an IDLE bit followed by the R/W bit set to 0 and the 7-bit address of the register that is intended to be programmed. The data to be written into the address location follows with the Most Significant Bit first and the write operation is terminated with an IDLE bit. There are 8 bits in each data byte and the maximum number of data bytes can be up to 8 bytes. Data being transmitted from the master to the slave can be terminated by the master by sending an IDLE bit after any data byte. After communication, to initiate another communication, the master must transmit another IDLE. When an invalid bit that violates the SWIF symbol protocol is transferred, the SWIF will reset and wait for the IDLE bit.

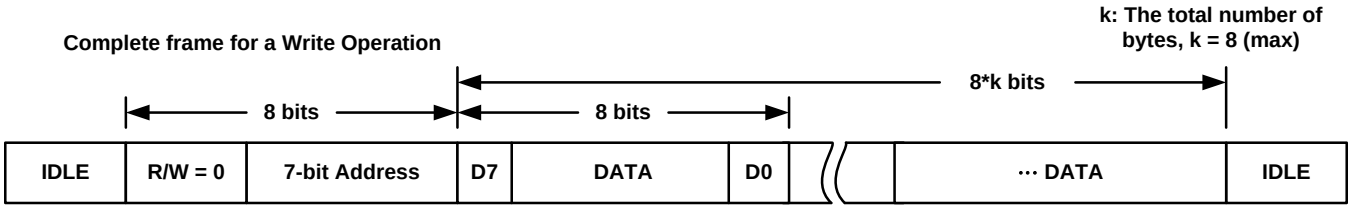

Figure 16. Complete Frame For A Write Command

Programming (continued)

7.5.2.2 Read Operation

The read signal is made by modulating the supply current. This can be read by using a SENSE resistor in the supply line. The LMP91300 modulates the supply current by sinking current into the LED terminal. The V+/EXT and LED terminals need to be connected by either an LED, resistor, or directly shorted for the Read operation to work. To perform a read operation, the master must send an IDLE bit to initiate communication, a R/W bit that should be set to 1, a 7-bit address, and another IDLE bit. Data is written back after the R/W and address byte are received so there must be a 9th rising edge to ensure that this condition is satisfied. After the last bit, A0, of the address is sent there should only be one rising edge to perform the IDLE bit. There are two valid methods of providing one rising edge, (1) a single pulse, or (2) a rising edge with the signal held high. See Figure 17 for a timing example of both cases.

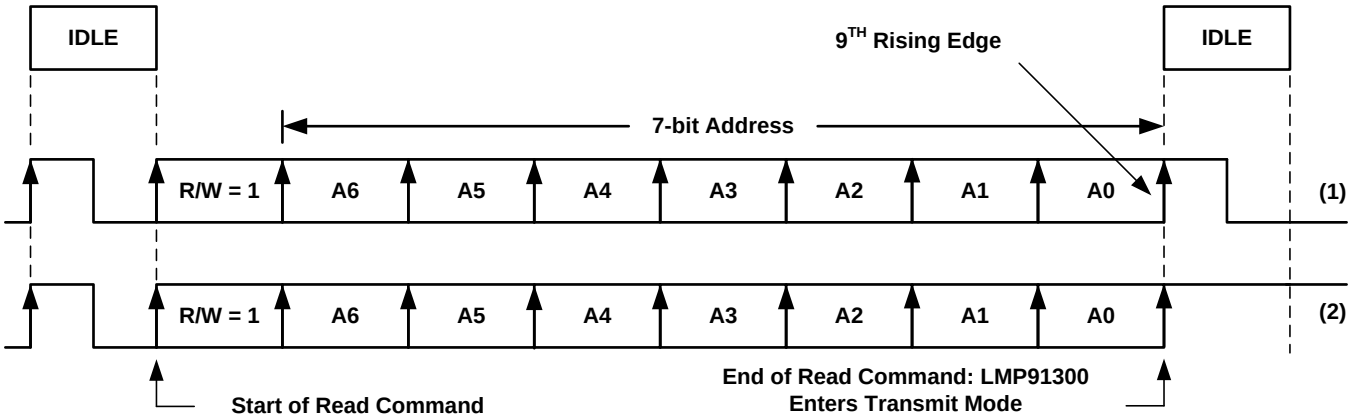

Figure 17. Read Timing Example: (1) Single Pulse, (2) Hold Signal High After Last Rising Edge

The LMP91300 goes into transmit mode 10µs plus a symbol length after the IDLE rising edge and no longer accepts any data until transmission is done. The master is not allowed to send anything until the slave has finished sending the data. Data is always written back on a read command with an IDLE bit, 8 bytes of data, and another IDLE bit. All transmitting is done in 8 byte blocks with the exception that only one byte is transmitted when the STATUS register (0x7E) is read. Since data transfer is always 8 bytes maximum (except for when register 0x7E, STATUS is read), there is a maximum wait time (8 bits*8 bytes + IDLE + IDLE + 10us) that the master must wait before taking ownership of the bus. The amount of time it takes for SWIF to switch from input to output is about one symbol.

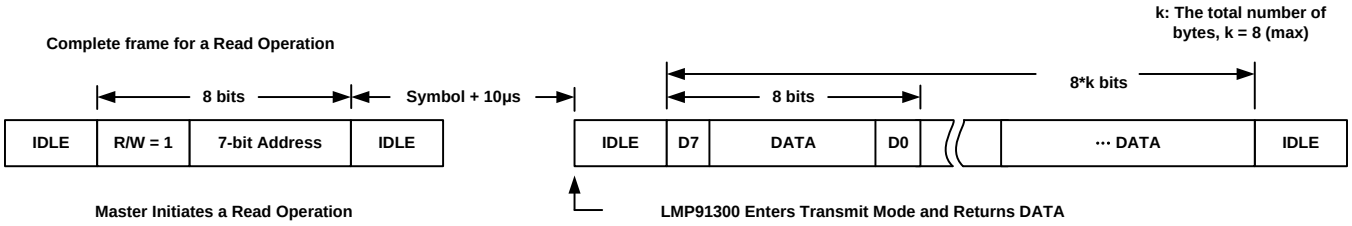

Figure 18. Complete Frame For A Read Command

The user has the option to set the LMP91300 into a read-only mode or SWIF disabled mode. When placed in read-only mode, the SWIF can only be used to read back the registers but all write capability is disabled. When placed in SWIF disabled mode, both read and write capabilities are disabled.

Copyright © 2013–2014, Texas Instruments Incorporated

Programming (continued)

7.5.3 Usage Priority Of Registers

When a LMP91300 is powered on the register values that are used depends on if the LMP91300 has had values burned into the registers. See register 0x7F, BURN_REQ.

1. No values have been burned into registers:
   (a) When powered on the LMP91300 will use the default values in registers 0x00-0x5D and 0x66-0x72.
   (b) If a value is written to any of these registers (0x00-0x5D and 0x66-0x72) the LMP91300 will use the value written instead of the power on default value.
   (c) If a value is written into a FNL register (0x73-0x78) the LMP91300 will continue to use the value in the INIT register instead of the corresponding FNL register. For example, if register OSC_CONFIG_3_FNL (0x77) has a value written to it, the LMP91300 will continue using the OSC_CONFIG_3_INIT (0x71) register and not use the value in the OSC_CONFIG_3_FNL (0x77) register.
   (d) If the LMP91300 is powered off and back on it will use the default values in registers 0x00-0x5D and 0x66-0x72.
2. Values have been burned into the LMP91300 memory using burn request 0x08.
   (a) When powered on the LMP91300 will use the burned values in registers 0x00-0x5D and 0x66-0x72.
   (b) If a value is written to any of these registers (0x00-0x5D and 0x66-0x72) the LMP91300 will use the written value instead of the burned value.
   (c) If a value is written into a FNL register (0x73-0x78) the LMP91300 will continue to use the value in the INIT register instead of the corresponding FNL register. For example, if register OSC_CONFIG_3_FNL (0x77) has a value written to it, the LMP91300 will continue using the OSC_CONFIG_3_INIT (0x71) register and not use the value in the OSC_CONFIG_3_FNL (0x77) register.
   (d) If the LMP91300 is powered off and back on the LMP91300 will use the burned values in registers 0x00-0x5D and 0x66-0x72.
3. Values have been burned into the LMP91300 memory using burn request 0x10 or 0x20.
   (a) When powered on the LMP91300 will use the burned values in registers 0x00-0x5D, 0x6A-0x70 and 0x73-0x78.
   (b) If a value is written to an INIT register (0x66-0x69, 0x71-0x72) it will be ignored and the corresponding FNL register (0x73-0x78) will be used.
   (c) If a value is written to a FNL register (0x73-0x78) the LMP91300 will use the written value instead of the burned value.
   (d) If the LMP91300 is powered off and then back on the LMP91300 will use the burned values in registers 0x00-0x5D, 0x6A-0x70 and 0x73-0x78.

It is important to remember that the LMP91300 will always use the values in the initial registers (either temporary written values or permanently burned values) if the final registers have not had values burned into them. If the final registers have had values burned into them, the LMP91300 will always use the final registers (either the permanently burned value or a value that has been temporally written in a final register).

The burn status of the LMP91300 can be determined by reading the STATUS register (0x7E) as long as a 0x80 burn request has not been issued.

Each register can only have a value burned into it one time. It is not possible to burn a value into a register multiple times.

Copyright © 2013–2014, Texas Instruments Incorporated

7.6 Register Maps

Name	Description	Address	Type	Default
LUT_x_GAIN_MSB, LSB	Temperature Look Up Table, -48°C to +136°C in 4°C steps, 2 bytes - gain	0x00-0x5D	RW	0x40 - even addresses, 0x00 - odd addresses
RESERVED	Reserved	0x5E-0x65	RO	0x00
DET_H_MSB_INIT	Detection High Threshold MSB (Initial)	0x66	RW	0x00
DET_H_LSB_INIT	Detection High Threshold LSB (Initial)	0x67	RW	0x00
DET_L_MSB_INIT	Detection Low Threshold MSB (Initial)	0x68	RW	0x00
DET_L_LSB_INIT	Detection Low Threshold LSB (Initial)	0x69	RW	0x00
INFO0	Device Information 0	0x6A	RW	0x00
INFO1	Device Information 1	0x6B	RW	0x00
INFO2	Device Information 2	0x6C	RW	0x00
INFO3	Device Information 3	0x6D	RW	0x00
OSC_CONFIG_0	Oscillator Configuration 0	0x6E	RW	0x0E
OSC_CONFIG_1	Oscillator Configuration 1	0x6F	RW	0x14
OSC_CONFIG_2	Oscillator Configuration 2	0x70	RW	0x45
OSC_CONFIG_3_INIT	Oscillator Configuration 3 (Initial)	0x71	RW	0x1B
OUT_CONFIG_INIT	Output Configuration (Initial)	0x72	RW	0xA2
DET_H_MSB_FNL	Detection High Threshold MSB (Final)	0x73	RW	0x00
DET_H_LSB_FNL	Detection High Threshold LSB (Final)	0x74	RW	0x00
DET_L_MSB_ FNL	Detection Low Threshold MSB (Final)	0x75	RW	0x00
DET_L_ LSB_ FNL	Detection Low Threshold LSB (Final)	0x76	RW	0x00
OSC_CONFIG_3_FNL	Oscillator Configuration 3 (Final)	0x77	RW	0x1B
OUT_CONFIG_FNL	Output Configuration (Final)	0x78	RW	0xA2
TEMP64	Temperature in °C + 64	0x79	RO	NA
PROXIMITY_MSB	Proximity MSB	0x7A	RO	NA
PROXIMITY_LSB	Proximity LSB	0x7B	RO	NA
RESERVED	Reserved	0x7C-0x7D	RO	0x00
STATUS	Device Status	0x7E	RO	NA
BURN_REQ	Burn Request	0x7F	WO	NA

Copyright © 2013–2014, Texas Instruments Incorporated

Register Maps (continued)

DET_H_MSB_INIT – Detection High Threshold MSB (Initial) (Address 0x66)

Bit	Name	Function (Default values in bold)
[7:0]	DET_H_MSB_INIT	**0x00:** Detection High Threshold MSB (Initial)

See the Usage Priority Of Registers section.

A starting value to put in the DET_H_MSB_INIT and DET_H_LSB_INIT registers can be determined by first setting the correct values in the OSC_CONFIG_0, OSC_CONFIG_1, OSC_CONFIG_2, OSC_CONFIG_3_INIT, OUT_CONFIG_INIT registers, putting the target at the distance away from the target that it is supposed to switch on at, reading the values in the PROXIMITY_MSB and Proximity LSB registers, and writing these values into the DET_H_MSB_INIT and DET_H_LSB_INIT registers. This value can be then adjusted as needed.

DET_H_LSB_INIT – Detection High Threshold LSB (Initial) (Address 0x67)

Bit	Name	Function (Default values in bold)
[7:0]	DET_H_LSB_INIT	**0x00:** Detection High Threshold LSB (Initial)

See the Usage Priority Of Registers section.

DET_L_MSB_INIT – Detection Low Threshold MSB (Initial) (Address 0x68)

Bit	Name	Function (Default values in bold)
[7:0]	DET_L_MSB_INIT	**0x00:** Detection Low Threshold MSB (Initial)

See the Usage Priority Of Registers section.

A starting value to put in the DET_L_MSB_INIT and DET_L_LSB_INIT registers can be determined by first setting the correct values in the OSC_CONFIG_0, OSC_CONFIG_1, OSC_CONFIG_2, OSC_CONFIG_3_INIT, OUT_CONFIG_INIT registers, putting the target at the distance away from the target that it is supposed to switch off at, reading the values in the PROXIMITY_MSB and Proximity LSB registers, and writing these values into the DET_L_MSB_INIT and DET_L_LSB_INIT registers. This value can be then adjusted as needed.

DET_L_LSB_INIT – Detection Low Threshold LSB (Initial) (Address 0x69)

Bit	Name	Function (Default values in bold)
[7:0]	DET_L_LSB_INIT	**0x00:** Detection Low Threshold LSB (Initial)

See the Usage Priority Of Registers section.

INFO0 – Device Information 0 (Address 0x6A)

Bit	Name	Function (Default values in bold)
[7:0]	INFO0	**0x00:** Device Information 0

This register can be used to store information such as assembly date, model number, revision number or any other data.

INFO1 – Device Information 1 (Address 0x6B)

Bit	Name	Function (Default values in bold)
[7:0]	INFO1	**0x00:** Device Information 1

This register can be used to store information such as assembly date, model number, revision number or any other data.

Copyright © 2013–2014, Texas Instruments Incorporated

INFO2 – Device Information 2 (Address 0x6C)

Bit	Name	Function (Default values in bold)
[7:0]	INFO2	**0x00:** Device Information 2

This register can be used to store information such as assembly date, model number, revision number or any other data.

INFO3 – Device Information 3 (Address 0x6D)

Bit	Name	Function (Default values in bold)
[7:0]	INFO3	**0x00:** Device Information 3

This register can be used to store information such as assembly date, model number, revision number or any other data.

OSC_CONFIG_0 – Oscillator Configuration 0 Register (Address 0x6E)

Bit	Name	Function (Default values in bold)
[7:5]	Reserved	**000**
[4:0]	RP_MAX	**01110:** Maximum RP, logarithmic scale

The optimal setting for RP_MAX is the highest value for which the correct amplitude is maintained, with the target set at the maximum switching distance.

1. Determine R_{LCTANK} as shown in the Determining The R_P of an LC Tank section.
2. Multiply $R_{PLCTANK}$ by 2 and use the next higher value from the chart below. For example, if $R_{PLCTANK}$ measured at 4mm is 11113, 11113x2 = 22226, so 12 (27704) would be used for RP_MAX.
3. This value can be adjusted up or down as needed.

Register Setting (Hex)	R_P (Ω)		Register Setting (Hex)	R_P (Ω)		Register Setting (Hex)	R_P (Ω)
0	3926991		B	193926		16	9235
1	3141593		C	145444		17	7182
2	2243995		D	109083		18	5387
3	1745329		E	83111		19	4309
4	1308997		F	64642		1A	3078
5	981748		10	48481		1B	2394
6	747998		11	38785		1C	1796
7	581776		12	27704		1D	1347
8	436332		13	21547		1E	1026
9	349066		14	16160		1F	798
A	249333		15	12120			

Copyright © 2013–2014, Texas Instruments Incorporated

OSC_CONFIG_1 – Oscillator Configuration 1 Register (Address 0x6F)

Bit	Name	Function (Default values in bold)
[7:5]	PADC_TIMEC	**000:** Sensor time constant range
[4:0]	RP_MIN	**10100:** Minimum RP, logarithmic scale

The PADC_TIMEC (time constant), sets the damping of the readout circuitry. The higher this Parameter is set, the more damping it has. If programmed to zero (0), it has no damping, and the system is almost unstable. The oscillation amplitude (envelope) will vary a lot. If this parameter is set to max (7), the damping is maximum, but that also means the response becomes slow. The optimal setting is what in control theory is called "critical damping", that is the least damping required to prevent overshoot in the step response. In most cases set PADC_TIMEC = 1.

The optimal setting for RP_MIN is the highest value for which the correct amplitude is maintained, with the target at the minimum switching distance. Some margin is given to the value.

1. Determine $R_{PLCTANK}$ as shown in the Determining The R_P of an LC Tank section.
2. Divide the $R_{PLCTANK}$ value by 2 and then select the next lower R_P value from the chart above. For example, if the finished Proximity Sensor is to detect at 4mm and the $R_{PLCTANK}$ measured at 4mm is 11113, 11113/2 = 5556.5, so 18 (5387) would be used for RP_MIN.
3. This value can be adjusted up or down as needed.

OSC_CONFIG_2 – Oscillator Configuration 2 Register (Address 0x70)

Bit	Name	Function (Default values in bold)
[7:0]	RESONATOR_MIN_FREQ	**01000101:** Minimum frequency setting, logarithmic scale

Determine the minimum oscillation frequency (f_{MIN}) of the LC tank. This is when there is no target in front of the LC tank. Calculate a value 20% below the minimum oscillation frequency, $f_{80\%} = f_{MIN} \times 0.8$. Use the following formula to calculate the value for RESONATOR_MIN_FREQ:

$$255 \times \frac{\log \frac{f_{80\%}}{2000}}{\log 5000} \tag{1}$$

Take this value, round up to the next integer and convert to hex.

OSC_CONFIG_3_INIT – Oscillator Configuration 3 Register (Initial) (Address 0x71)

Bit	Name	Function (Default values in bold)
[7:6]	RESERVED	**00**
[5]	UNDER_RANGE_SWITCH_EN	**0:** Off 1: On
[4:3]	OSC_AMP	00: 1V 01: 2V 10: 4V **11:** Reserved
[2:0]	RESPONSE_TIME	000: Reserved 001: 96 010: 192 **011:** 384 100: 768 101: 1536 110: 3072 111: 6144

See the Usage Priority Of Registers section.

UNDER_RANGE_SWITCH_EN: The following applies if at least one temperature conversion has been completed:

1. If R_P < 798Ω (for example, the metal plate is against the sensor) before the fourth conversion of the R_P to digital converter (after Power On Reset) the switch will be activated regardless of the UNDER_RANGE_SWITCH_EN setting.
2. If R_P < 798Ω after the fourth conversion the switch state depends on the setting of UNDER_RANGE_SWITCH_EN.
   (a) If UNDER_RANGE_SWITCH_EN = 1: The switch will be enabled.
   (b) If UNDER_RANGE_SWITCH_EN = 0: The previous switch state will be held until the oscillation restarts (R_P > 798Ω) and enough time has passed for a conversion to update the switch status.

If a temperature conversion has not been completed the switch state will not be changed.

OSC_AMP: The oscillation amplitude at terminals INA and INB can be set to 1V, 2V, or 4V. If the LMP91300 has not been burned with user values, the power on value for OSC_AMP is 11: Reserved. This will need to be changed to either 1V, 2V or 4V before the LMP91300 is used.

RESPONSE_TIME: Using a lower response time will shorten the settling time of the digital filter and give faster readings from the R_P to digital converter but will increase the noise in the reading. A higher setting gives the digital filter more time to settle and will decrease the noise in the reading.

Copyright © 2013–2014, Texas Instruments Incorporated

OUT_CONFIG_INIT – Output Configuration Register (Initial) (Address 0x72)

Bit	Name	Function (Default values in bold)
[7:6]	SWDRV_CURRENT	00: 2.5mA 01: 3.75mA **10:** 5mA 11: 10mA
5	OUTPUT_MODE	0: 3-Wire NPN **1:** 3-Wire PNP
4	DRIVE_MODE	**0:** Normally open 1: Normally closed
3	LED_ENABLE	**0:** On 1: Off
2	LED_MODE	**0:** Normally off 1: Normally on
1	LED_CURRENT	0: 2.5mA **1:** 5mA
0	SHORTCKT_DUTY_CYCLE	**0:** 0.1% 1: 0.8%

See the Usage Priority Of Registers section.

SWDRV_CURRENT: Used to set the amplitude of current from the SWDRV terminal used to control the external transistor.

DRIVE_MODE: Normally open and normally closed refer to the external NPN or PNP switch when a target is far away from the inductive sensor. When the switch is normally open the transistor is not conducting when the target is far away from the target (the distance is greater than the value in DET_L_MSB and DET_L_ LSB). The switch is conducting when the target is close to the sensor (the distance is less than the value in DET_H_MSB and DET_H_ LSB). When the switch is normally closed the transistor is conducting when the target is far away from the target (the distance is greater than the value in DET_L_MSB and DET_L_ LSB). The switch is not conducting when the target is close to the sensor (the distance is less than the value in DET_H_MSB and DET_H_ LSB).

LED_ENABLE: When set to On the LED will function as set in Bit 2, LED_MODE. When set to Off the LED will always be off.

LED_MODE: Normally off means that the LED is off when the target is far away from the sensor (the distance is greater than the value in DET_L_MSB and DET_L_ LSB). The LED will turn on when the target is close (the distance is less than the value in DET_H_MSB and DET_H_ LSB). Normally on means that the LED is on when the target is far away from the sensor (the distance is greater than the value in DET_L_MSB and DET_L_ LSB).). The LED will turn off when the target is close (the distance is less than the value in DET_H_MSB and DET_H_ LSB).

LED_CURRENT: Sets the current through the LED.

SHORTCKT_DUTY_CYCLE: When the LMP91300 is in overload protection mode it will test to determine if the overload condition is still present. The switch will be on for about 30µs, with an on to off duty cycle as set by SHORTCKT_DUTY_CYCLE to protect the external BJT. For example, if SHORTCKT_DUTY_CYCLE is set to 0.1% the switch drive will be on for 30µs and off for 29.97ms (tOFF = (30µs/0.1%) - 30µs).

Copyright © 2013–2014, Texas Instruments Incorporated

DET_H_MSB_FNL – Detection High Threshold MSB (Final) (Address 0x73)

Bit	Name	Function (Default values in bold)
[7:0]	DET_H_MSB_FNL	**0x00:** Detection High Threshold MSB (Final)

See the Usage Priority Of Registers section.

A starting value to put in the DET_H_MSB_FNL and DET_H_LSB_FNL registers can be determined by first setting the correct values in the OSC_CONFIG_0, OSC_CONFIG_1, OSC_CONFIG_2, OSC_CONFIG_3_INIT/FNL, OUT_CONFIG_INIT/FNL registers, putting the target at the distance away from the target that it is supposed to switch on at, reading the values in the PROXIMITY_MSB and Proximity LSB registers, and writing these values into the DET_H_MSB_INIT/FNL and DET_H_LSB_INIT/FNL registers. This value can be then adjusted as needed.

DET_H_LSB_FNL – Detection High Threshold LSB (Final) (Address 0x74)

Bit	Name	Function (Default values in bold)
[7:0]	DET_H_LSB_FNL	**0x00:** Detection High Threshold LSB (Final)

See the Usage Priority Of Registers section.

DET_L_MSB_FNL – Detection Low Threshold MSB (Final) (Address 0x75)

Bit	Name	Function (Default values in bold)
[7:0]	DET_L_MSB_FNL	**0x00:** Detection Low Threshold MSB (Final)

See the Usage Priority Of Registers section.

A starting value to put in the DET_L_MSB_FNL and DET_L_LSB_FNL registers can be determined by first setting the correct values in the OSC_CONFIG_0, OSC_CONFIG_1, OSC_CONFIG_2, OSC_CONFIG_3_INIT/FNL, OUT_CONFIG_INIT/FNL registers, putting the target at the distance away from the target that it is supposed to switch off at, reading the values in the PROXIMITY_MSB and Proximity LSB registers, and writing these values into the DET_L_MSB_INIT/FNL and DET_L_LSB_INIT/FNL registers. This value can be then adjusted as needed.

DET_L_LSB_FNL – Detection Low Threshold LSB (Final) (Address 0x76)

Bit	Name	Function (Default values in bold)
[7:0]	DET_L_LSB_FNL	**0x00:** Detection Low Threshold LSB (Final)

See the Usage Priority Of Registers section.

Copyright © 2013–2014, Texas Instruments Incorporated

OSC_CONFIG_3_FNL – Oscillator Configuration 3 Register (Final) (Address 0x77)

Bit	Name	Function (Default values in bold)
[7:6]	RESERVED	**00**
[5]	UNDER_RANGE_SWITCH_EN	**0:** Off 1: On
[4:3]	OSC_AMP	00: 1V 01: 2V 10: 4V **11:** Reserved
[2:0]	RESPONSE_TIME	000: Reserved 001: 96 010: 192 **011:** 384 100: 768 101: 1536 110: 3072 111: 6144

See the Usage Priority Of Registers section.

UNDER_RANGE_SWITCH_EN: The following applies if at least one temperature conversion has been completed:

1. If R_P < 798Ω (for example, the metal plate is against the sensor) before the fourth conversion of the R_P to digital converter (after Power On Reset) the switch will be activated regardless of the UNDER_RANGE_SWITCH_EN setting.
2. If R_P < 798Ω after the fourth conversion the switch state depends on the setting of UNDER_RANGE_SWITCH_EN.
   (a) If UNDER_RANGE_SWITCH_EN = 1: The switch will be enabled.
   (b) If UNDER_RANGE_SWITCH_EN = 0: The previous switch state will be held until the oscillation restarts (R_P > 798Ω) and enough time has passed for a conversion to update the switch status.

If a temperature conversion has not been completed the switch state will not be changed.

OSC_AMP: The oscillation amplitude at terminals INA and INB can be set to 1V, 2V, or 4V. If the LMP91300 has not been burned with user values, the power on value for OSC_AMP is 11: Reserved. This will need to be changed to either 1V, 2V or 4V before the LMP91300 is used.

RESPONSE_TIME: Using a lower response time will shorten the settling time of the digital filter and give faster readings from the R_P to digital converter but will increase the noise in the reading. A higher setting gives the digital filter more time to settle and will decrease the noise in the reading.

OUT_CONFIG_FNL – Output Configuration Register (Final) (Address 0x78)

Bit	Name	Function (Default values in bold)
[7:6]	SWDRV_CURRENT	00: 2.5mA 01: 3.75mA **10:** 5mA 11: 10mA
5	OUTPUT_MODE	0: 3-Wire NPN **1:** 3-Wire PNP
4	DRIVE_MODE	**0:** Normally open 1: Normally closed
3	LED_ENABLE	**0:** On 1: Off
2	LED_MODE	**0:** Normally off 1: Normally on
1	LED_CURRENT	0: 2.5mA **1:** 5mA
0	SHORTCKT_DUTY_CYCLE	**0:** 0.1% 1: 0.8%

See the Usage Priority Of Registers section.

SWDRV_CURRENT: Used to set the amplitude of current from the SWDRV terminal used to control the external transistor.

DRIVE_MODE: Normally open and normally closed refer to the external NPN or PNP switch when a target is far away from the inductive sensor. When the switch is normally open the transistor is not conducting when the target is far away from the target (the distance is greater than the value in DET_L_MSB and DET_L_ LSB). The switch is conducting when the target is close to the sensor (the distance is less than the value in DET_H_MSB and DET_H_ LSB). When the switch is normally closed the transistor is conducting when the target is far away from the target (the distance is greater than the value in DET_L_MSB and DET_L_ LSB). The switch is not conducting when the target is close to the sensor (the distance is less than the value in DET_H_MSB and DET_H_ LSB).

LED_ENABLE: When set to On the LED will function as set in Bit 2, LED_MODE. When set to Off the LED will always be off.

LED_MODE: Normally off means that the LED is off when the target is far away from the sensor (the distance is greater than the value in DET_L_MSB and DET_L_ LSB). The LED will turn on when the target is close (the distance is less than the value in DET_H_MSB and DET_H_ LSB). Normally on means that the LED is on when the target is far away from the sensor (the distance is greater than the value in DET_L_MSB and DET_L_ LSB).). The LED will turn off when the target is close (the distance is less than the value in DET_H_MSB and DET_H_ LSB).

LED_CURRENT: Sets the current through the LED.

SHORTCKT_DUTY_CYCLE: When the LMP91300 is in overload protection mode it will test to determine if the overload condition is still present. The switch will be on for about 30µs, with an on to off duty cycle as set by SHORTCKT_DUTY_CYCLE to protect the external BJT. For example, if SHORTCKT_DUTY_CYCLE is set to 0.1% the switch drive will be on for 30µs and off for 29.97ms (tOFF = (30µs/0.1%) - 30µs).

Copyright © 2013–2014, Texas Instruments Incorporated

TEMP64 – Temperature In °C + 64 (Address 0x79)

Bit	Name	Function (Default values in bold)
[7:0]	TEMP64	Temperature in °C + 64

Convert the value read from this register to decimal and subtract 64 to determine the temperature in °C.

PROXIMITY_MSB – Proximity MSB (Address 0x7A)

Bit	Name	Function (Default values in bold)
[7:0]	PROXIMITY_MSB	Proximity MSB

When a command is issued to read the PROXIMITY_MSB register, values from the R_P to Digital converter are placed in the PROXIMITY_MSB and Proximity LSB registers. The value in the Proximity LSB register will not change until another read command of PROXIMITY_MSB is given. It is recommended that both the PROXIMITY_MSB and Proximity LSB registers be read together.

PROXIMITY_LSB – Proximity LSB (Address 0x7B)

Bit	Name	Function (Default values in bold)
[7:0]	Proximity LSB	Proximity LSB

STATUS – Device Status (Address 0x7E)

Bit	Name	Function (Default values in bold)
7	PADC_TIMEOUT	**0:** No timeout 1: Timeout
6	ECC_ERR	**0:** No error 1: Error
5	BUSY	0: Part is busy **1:** Part is not busy
4	BURN_PROG	**0:** No burn in progress 1: Burn in progress
[3:0]	SWIF_STATUS	**0x0:** No burn has occurred, full SWIF access 0x1: Addresses 0x00 to 0x72 burned, full SWIF access 0x3: Addresses 0x00 to 0x78 burned, full SWIF access 0x7: Addresses 0x00 to 0x78 burned, SWIF is read only 0xF: Addresses 0x00 to 0x78 burned, SWIF is disabled

When register 0x7E is read only one byte of data is transmitted from the LMP91300.

BURN_REQ – Burn Request (Address 0x7F)

Bit	Name	Function (Default values in bold)
[7:0]	BURN_REQ	0x08: Burn Temperature Look Up Table data (0x00 – 0x5D), initial registers, device information registers, and configuration registers (0x66 – 0x72). 0x10: Burn final registers (0x73 – 0x78). 0x20: Burn all registers (0x00 – 0x78). 0x40: Set SWIF to read back mode. 0x80: Disable SWIF.

8 Application and Implementation

8.1 Application Information

The LMP91300 is a complete analog front end (AFE) optimized for use in inductive proximity sensors. The LMP91300 detects the presence of a metal object based on the R_P change of an LC oscillator, depending on the distance of the metal object.

The LMP91300 can be used in 3 wire NPN or PNP inductive sensors.

8.2 Typical Application

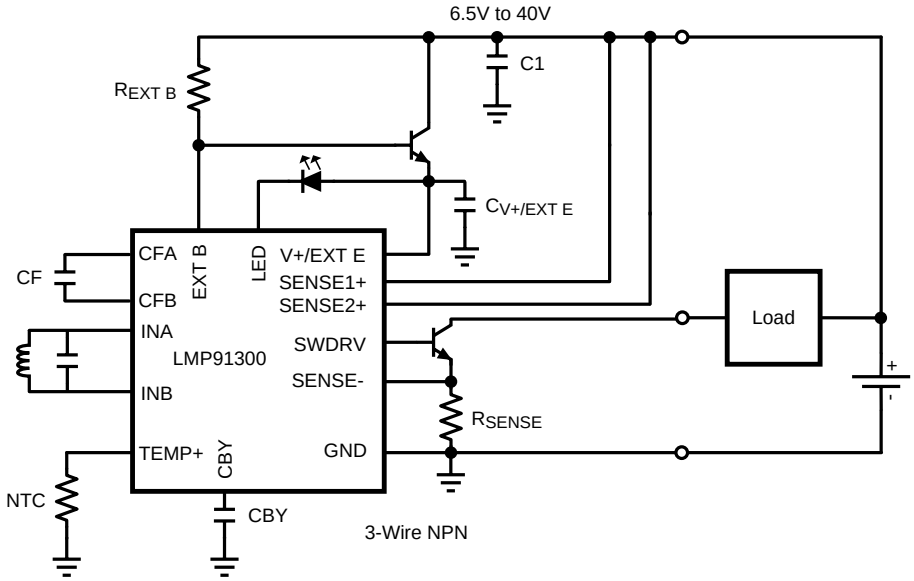

Figure 19. 3-Wire NPN Configuration

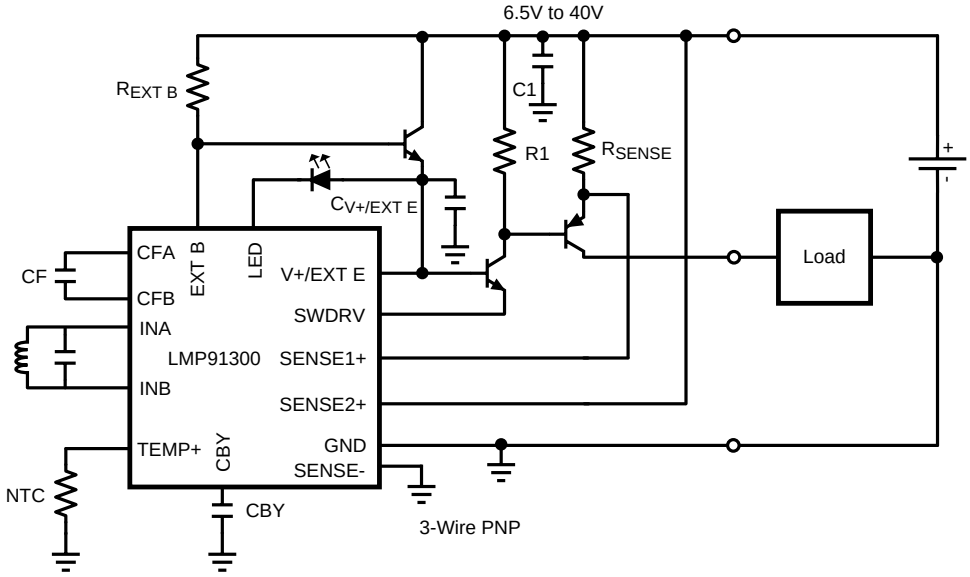

Figure 20. 3-Wire PNP Configuration

For operation above 40V a series resistance must be added to SENSE1+ and SENSE2+. The mismatch in these resistors will affect the overload protection accuracy for the PNP configuration. These resistors must be chosen so that the SENSE1+ and SENSE2+ terminals do not operate above 40V.

Copyright © 2013–2014, Texas Instruments Incorporated

Typical Application (continued)

8.2.1 Design Requirements

1. Loop Voltage: 6.5V to 40V
2. LC Tank Oscillation Frequency: 0.005MHz to 5MHz
3. LC Tank R_P: 798Ω to 3.93MΩ

8.2.2 Detailed Design Procedure

8.2.2.1 Quick Start

When a new sensor is being used the registers should be setup using the following procedure. Instructions on how to determine the value to put in each register are described in the Register Maps section.

1. Set RP_MAX in the OSC_CONFIG_0 register.
2. Set PADC_TIMEC and RP_MIN in the OSC_CONFIG_1 register.
3. Set RESONATOR_MIN_FREQ in the OSC_CONFIG_2 register.
4. Set UNDER_RANGE_SWITCH_EN, OSC_AMP, and RESPONSE_TIME in the OSC_CONFIG_3_INIT and OSC_CONFIG_3_FNL registers. The same values should be written to both registers. Setting OSC_AMP to 4V and RESPONSE_TIME to 6144 should give the most accurate results. Note that the power on default for OSC_AMP is 11:Reserved so OSC_AMP must be changed to either 1V, 2V, or 4V.
5. Select the value of the CF capacitor as described in the CF (CFA and CFB Terminals) section.
6. Set the values in the OUT_CONFIG_INIT and OUT_CONFIG_FNL registers as needed. The same values should be written to both registers.
7. Put the sensor at the target distance that the switch is supposed to turn on. Read the PROXIMITY_MSB and Proximity LSB multiple times. If needed, RP_MAX or RP_MIN can be adjusted up or down one step at a time to determine the combination that gives the most accurate setting for this specific sensor.
8. Put the sensor at the target distance that the switch is supposed to turn on. Read the PROXIMITY_MSB and Proximity LSB multiple times, take an average, and write this value into the DET_H_MSB_INIT and DET_H_LSB_INIT and DET_H_MSB_FNL and DET_H_LSB_FNL registers. This value may need to be adjusted.
9. Put the sensor at the target distance that the switch is supposed to turn off. Read the PROXIMITY_MSB and Proximity LSB multiple times, take an average, and write this value into the DET_L_MSB_INIT and DET_L_LSB_INIT and DET_L_MSB_FNL and DET_L_LSB_FNL registers. This value may need to be adjusted.

8.2.2.2 Determining The R_P of an LC Tank

The method in the Quick Start section for setting the values in the LMP91300 registers requires that the R_P of the LC tank be known at the switching point (the point that the switch is changed from the normal condition to the triggered condition). It is best to use an impedance analyzer to characterize the R_P of the LC tank over distance. If an impedance analyzer is not available the R_P of the LC tank can be determined using the method below.

1. Set the target at the switching distance from the sensor.
2. Set PADC_TIMEC = 1, RESONATOR_MIN_FREQ as described in the Register Maps section, OSC_AMP = 4V, and RESPONSE_TIME = 6144.
3. Put a scope probe on INA or INB.
4. Step RP_MIN up one step at a time until the amplitude of the signal on the oscilloscope becomes variable as shown in Figure 21 and Figure 22. Increase RP_MIN by two, for example if the amplitude becomes variable at 17, set RP_MIN to 19.
5. Step RP_MAX up one step at a time until the amplitude of the signal on the oscilloscope becomes steady. Decrease RP_MAX by two steps, for example if amplitude became steady at 16, set RP_MAX to 14.
6. Set the CF capacitor as described in the CF (CFA and CFB Terminals) section.
7. Read the Proximity value in registers 0x7A and 0x7B and convert this value to decimal.
8. Use the formula $R_{PLCTANK}$ (Ω) = (RP_MAX × RP_MIN) / (RP_MIN × (1-Y) + RP_MAX × Y), where Y = Proximity Data / 2^15 and RP_MAX and RP_MIN are the impedance values shown in Register Maps section.

This value can have a tolerance of ±25% when compared to the value from an impedance analyzer.

Typical Application (continued)

8.2.2.3 Component Selection And Layout

The following PCB layout guidelines and suggested components should be used when designing a PCB.

8.2.2.4 CF (CFA and CFB Terminals)

10pF to 100nF, ≥10V, X7R ceramic capacitor. The traces connecting CFA and CFB to the capacitor should be as short as possible to minimize the parasitic capacitance. The value of this capacitor will be based on the time constant and resonating frequency of the LC tank.

For optimal performance, the value of CF, needs to be as small as possible, but large enough such that the active filter does not saturate. The size of this capacitor depends on the time constant of the SENSE coil, which is given by L/R_S, (L = inductance, R_S = series resistance of the inductor at oscillation frequency). The larger this time constant becomes, the larger the value of filter capacitor that is required. Hence, this time constant reaches its maximum when there is no target present in front of the sensing coil.

The following procedure can be used to determine CF:

1. Start with a default value of 10nF for CF.
2. Set RP_MAX, PADC_TIMEC, RP_MIN, RESONATOR_MIN_FREQ, OSC_AMP, and RESPONSE_TIME to the desired values as described in the Register Maps section.
3. Move the metal target far away from the LC tank.
4. Connect a scope probe to the INB (terminal 21) and CFB (terminal 17) terminals. Since the CFB terminal is very sensitive to capacitive loading, it is recommended to use an active probe. As an alternative, a passive probe with a 1kΩ series resistance between the tip and the CFB terminal can be used.
5. Set the time scale of the oscilloscope so that many periods of the signal on the INA terminal can be seen. See Figure 21.
6. Set the CF capacitor value so that the AC portion of the waveform is about $1V_{PP}$ maximum. Decreasing the capacitor value will make the AC portion of the waveform larger. This signal scales linearly with the reciprocal of the filter capacitance. For example, if a 100pF filter capacitor is used and the signal observed on the CFB terminal has a peak-to-peak value of 200mV, the desired 1V peak-to-peak value is obtained using a 200mV / 1V × 100pF = 20pF filter capacitor. Figure 21 shows the waveforms on CFB and INA and Figure 22 shows the waveforms using a zoomed in horizontal scale. Note that the waveforms on CFB and INA are not a constant amplitude. The waveform on CFB should be adjusted so that the maximum value is $1V_{PP}$.

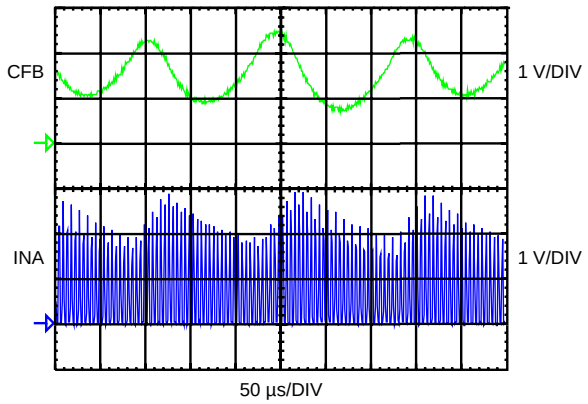

Figure 21. Determining the Value of CF

Copyright © 2013–2014, Texas Instruments Incorporated

Typical Application (continued)

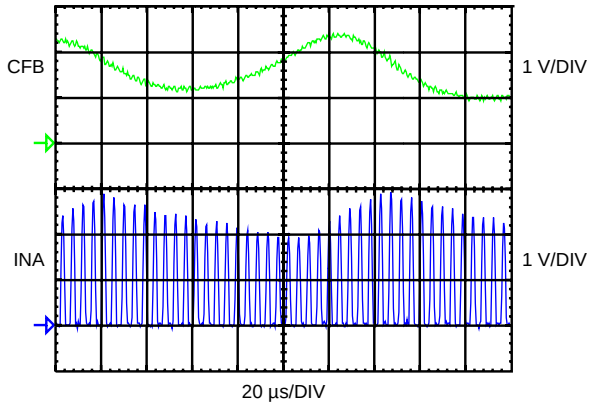

Figure 22. Determining the Value of CF

8.2.2.5 NTC (TEMP+ Terminal)

The thermistor, such as the Murata NCP03WF104F05RL, should be placed as close to the LC tank as possible to minimize error introduced by temperature variation within the operating environment. The NTC should also be close to the LMP91300 to minimize the parasitic capacitance. It is connected between terminals 22 and 23. There should be a ground trace separating the thermistor from the LC tank, to minimize the coupling from the signal on the LC tank. Ideally, the thermistor could be on one side of the PCB and the LC tank on the other side of the PCB with a ground plane between them.

8.2.2.6 C1

0.1µF to 1µF, ≥50V, X7R ceramic capacitor. This is a bypass capacitor for the regulator. The value of this capacitor will also affect the rising and falling edges of the SWIF signal. A good value to start with is 0.1µF.

8.2.2.7 $C_{V+/EXT\ E}$

100nF, ≥10V, X7R ceramic capacitor. If the loop voltage is ≤ 8V, 100nF is the maximum value that can be used.

8.2.2.8 CBY (CBY Terminal)

56nF, ≥5V, X7R ceramic capacitor. Connect between the CBY terminal and ground.

8.2.2.9 R_{SENSE}

The value of this resistor and power rating of the R_{SENSE} resistor depends on the amount of current allowed through the switch transistor. The LMP91300 has an Over Current Detection Threshold of 310mV typical. When the LMP91300 detects ≥ 310mV across the sense resistor it will go into Overload Protection mode. In this mode it will periodically turn on the switch for 30µs to check if the overload condition is still there. If the LMP91300 detects a value ≥ 310mV (typical) across the sense resistor it will limit the current through the switch so that the voltage across R_{SENSE} is ≤ 480mV. See the OVERLOAD PROTECTION entries in the ELECTRICAL CHARACTERISTICS section and Figure 7, Figure 12, and Figure 13.

8.2.2.10 $R_{EXT\ B}$ (EXT B Terminal):

The internal regulator along with the external NPN transistor will develop 5V on the V+/EXT E terminal. The EXT B terminal will be one diode drop above this at about 5.6V. The voltage across $R_{EXT\ B}$ will be the difference between the loop voltage and the 5.6V on the EXT B terminal. The value of $R_{EXT\ B}$ depends on the minimum loop voltage and the minimum temperature that the LMP91300 will be used at. The values shown in Figure 23 show the largest typical value for $R_{EXT\ B}$ that can be used for a specific minimum loop voltage and minimum temperature. For example, if the LMP91300 is being used in a proximity sensor that has a specification of 10V

Typical Application (continued)

minimum for the loop voltage and an operating temperature minimum of 0°C, a value of 26kΩ or smaller can be used for $R_{EXT\ B}$. The data shown in Figure 23 depends on several variables, such as the external transistor used and the value of $C_{V+/EXT\ E}$. A SMBTA06 transistor was used when taking the data in Figure 23. The user must ensure that the resistor has the correct power rating and that the regulated 5V on the V+/EXT E terminal comes up correctly and is stable for the entire loop voltage and temperature range in the intended application.

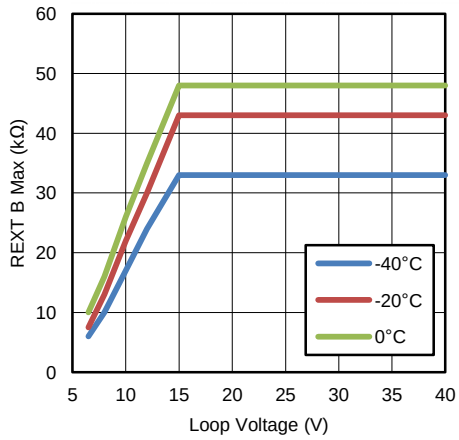

Figure 23. Maximum $R_{EXT\ B}$ Value

8.2.2.11 R1

33kΩ, 1/8W resistor.

8.2.2.12 SENSE1+ And SENSE2+ Terminals ($R_{SENSE1+}$, $R_{SENSE2+}$)

If the supply is ≤ 40V these terminals can be shorted to the supply. If the supply is > 40V resistors must be placed between the SENSE1+ and SENSE2+ terminals and the supply. These resistors must drop enough voltage so that the terminals of the LMP91300 are < 40V. The resistors will have 100µA going through them. For example, if the supply is at 50V, 10V will need to be dropped across these resistors so the resistance will be 10V/100µV = 100kΩ. These resistors must be matched resistors, 0.1% or better. Keep the trace between the LMP91300 and the resistors short.

In NPN mode the SENSE1+ terminal is not used. It should be connected to the supply as described above.

8.2.2.13 NPN

A SMBTA06 or similar transistor.

8.2.2.14 PNP

A FMMT593 or similar transistor.

8.2.2.15 LED

The LMP91300 can be programmed to supply 2.5 or 5mA. The LED chosen should have a voltage drop of less than 3V. If an LED is not needed the LED terminal can be connected directly to the V+/EXT E terminal. The LMP91300 uses the LED terminal to talk back to the device controlling the SWIF interface by sinking current into the LED terminal.

Copyright © 2013–2014, Texas Instruments Incorporated

Typical Application (continued)

8.2.2.16 LC Tank and INA and INB Terminals

There should be a ground trace between the INA and INB terminals and the rest of the terminals of the LMP91300 to decrease the coupling of the signal on the INA and INB terminals to the other terminals of the LMP91300. The trace between the LC tank and the INA and INB terminals should be as short as possible as shown in part A of Figure 24. Longer traces between the LC tank and the INA and INB terminals can cause ringing at the INA and INB terminals which can produce very noisy proximity readings. If longer traces need to be used split the LC tank so that the capacitor is close to the LMP91300 as shown in part B of Figure 24. If both the L an C have to be located a longer distance away from the LMP91300 small capacitors (15 to 22pF) can be connected between INA and ground and INB and ground as shown in part C of Figure 24.

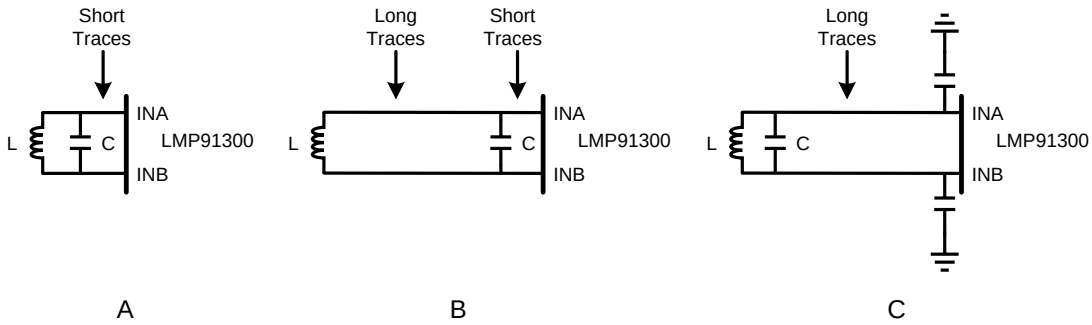

Figure 24. LC Tank Traces

8.2.2.17 SWDRV Terminal

Keep the trace between the SWDRV terminal and the transistor short.

8.2.2.18 P1 To P5 Terminals

Connect to ground using short traces.

8.2.2.19 GND Terminals

Connect to ground using short traces.

8.2.2.20 NC Terminals

These terminals do not connect to the silicon and can be left unconnected.

8.2.2.21 Exposed DAP

Connect to ground. The DAP area on the PCB can be used as the center of a star ground with all other ground terminals connecting to it.

8.2.2.22 SENSE-

In PNP mode the SENSE- terminal is not used. It should be connected to ground.

8.2.3 Look-Up Table Calibration

1. **R_P Measurement:** Take R_P measurements by reading the Proximity registers 0x7A and 0x7B from the lowest temperature of interest to the highest temperature within the predefined LUT values. The temperature range should fall within the LUT preset values of -48°C to 136°C in 4°C increments. Convert all the measured values from hex to decimal.
   (a) Proximity measurements at all temperatures between -48°C to 136°C will give the most accurate results. If the proximity measurement at some temperatures are skipped a value will need to be interpolated from the measured values. This is described in step 4.
   (b) To avoid uncertain conditions outside the temperature range of interest the user should duplicate the same value of R_P for the temperature below and above those limits. For example, if the lowest temperature that a proximity measurement was made was -28°C, this value should be used for all lower temperatures. The same applies at the high temperature range of the LUT.

Typical Application (continued)

2. **Temperature Correlation:** For every R_P measurement the temperature register TEMP64 (0x79) should be read to ensure that the ambient temperature correlates to the intended LUT preset temperature. The TEMP64 register is an 8 bit unsigned register that contains the temperature (in °C) + 64. Any discrepancy between ambient temperature and preset LUT temperature during calibration will result in a temperature calibration error.
3. **Normalizing R_P:** Once all R_P values have been read and logged for the whole LUT temperature range as illustrated in Figure 25 the data must be normalized to the intended ambient operating temperature T_0. This is done by dividing each R_P data point by R_0, the measured R_P at the ambient operating temperature for each temperature of the LUT register. This ratio provides the gain correction factor coefficients (GCF) as shown in Figure 26. If the ambient operating temperature T_0 does not fall on one of the 4°C incremental points of the LUT then R_0 will need to be interpolated.

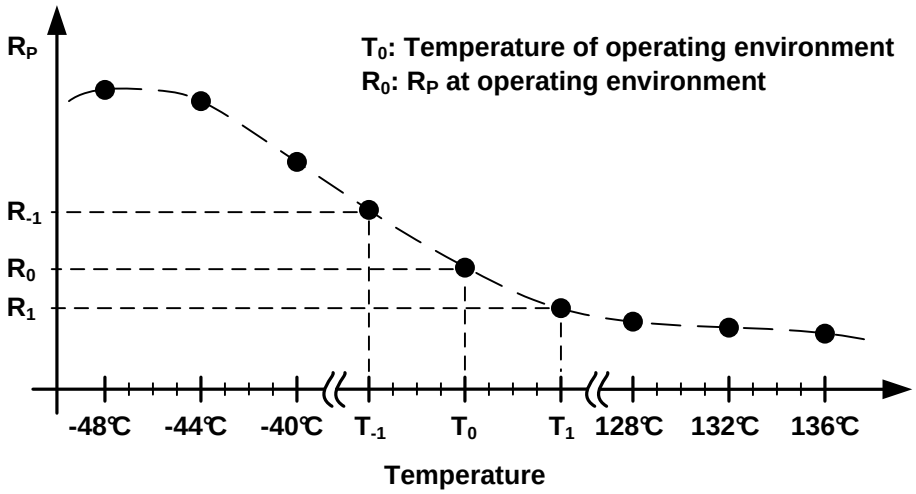

Figure 25. R_P Measurement Example

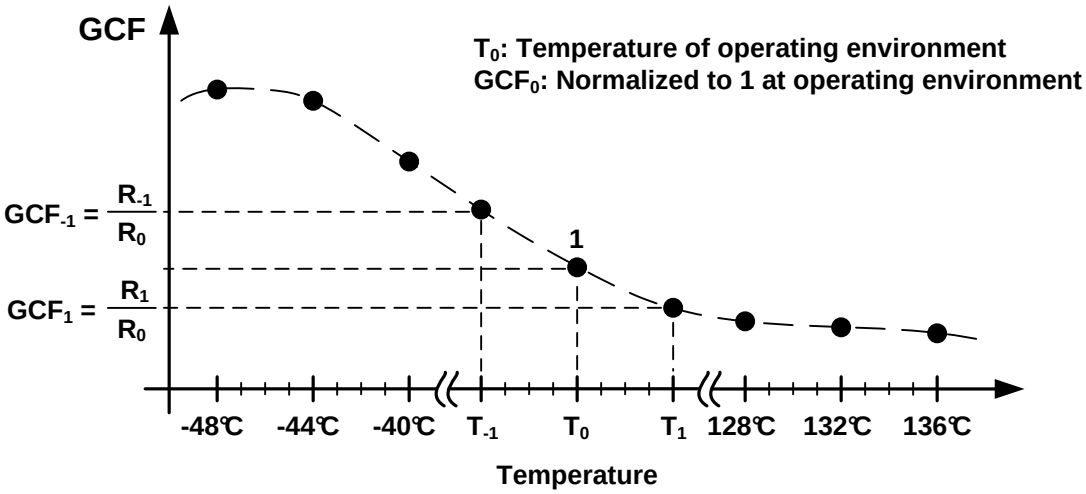

Figure 26. GCF Normalized Example

4. **Interpolating GCF values that have not been measured:** Plot the measured GCF values vs temperature and then make a polynomial trend line of the data. Use the formula of the trend line to determine the GCF values for all temperatures that were not measured.
5. **LUT Data Entry:** Each GCF needs to be converted from decimal to a 16 bit binary word representing a decimal number between 0 and 4. An example illustrating this binary representation of the decimal number is shown in Figure 27. The conversion equation that scales the GCF into the 16 bit binary GCF_{BINARY} is shown in Equation 2. Once the conversion has been calculated for each temperature the values are programmed

Copyright © 2013–2014, Texas Instruments Incorporated

Typical Application (continued)

into the appropriate registers in the LUT. The MSB of the LUT value consists of bits D15 to D8 as shown in Figure 27, the LSB are bits D7 to D0.

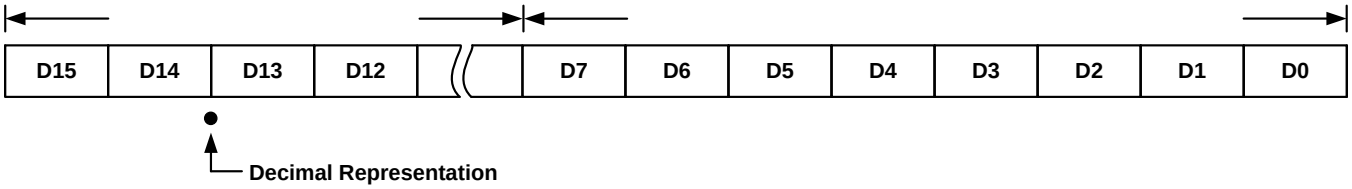

Figure 27. Binary Representation Of Gain Correction Factor

$$GCF_{BINARY} = GCF \times \frac{2^{16}}{4} \quad (2)$$

6. **NTCs with a β ≠ 4250:** The temperature LUT has been internally hard coded based on a specific NTC with a β factor of 4250 (Murata NCP03WF104F05RL). The user must recalibrate the LUT when an NTC with a β factor other than 4250 is used. The LUT temperature range is extended past the LMP91300 operating range to facilitate recalibrating the LUT if using other off the shelf NTC components. The process for using a NTC that has β ≠ 4250 is as follows:
   (a) Put the finished system including the LC tank, NTC and LMP91300 into a temperature chamber.
   (b) Set the temperature of the chamber to a value, for this example we will use -40°C.
   (c) Read the temperature from register 0x79. For this example we will use -44°C.
   (d) Follow the process above to determine the gain.
   (e) The gain value will go into the -44°C position of the LUT.
   (f) Connect terminals P1 - P5 to ground using short traces.
   (g) Connect the Ground terminal to the main ground point using short traces.

9 Power Supply Recommendations

An internal voltage regulator allows the LMP91300 to operate with a supply from 6.5V to 40V. The values of C1 and $C_{V+/EXT\ E}$ must be chosen as described in the Detailed Design Procedure section.

10 Layout

10.1 Layout Guidelines

- The traces connecting pins CFA and CFB to the CF capacitor should be as short as possible to minimize the parasitic capacitance.
- The NTC should be placed as close to the LC tank as possible to minimize error introduced by temperature variation within the operating environment. The NTC should also be close to the LMP91300 to minimize the parasitic capacitance. There should be a ground trace separating the thermistor from the LC tank, to minimize the coupling from the signal on the LC tank. Ideally, the thermistor could be on one side of the PCB and the LC tank on the other side of the PCB with a ground plane between them.
- There should be a ground trace between the INA and INB terminals and the rest of the terminals of the LMP91300 to decrease the coupling of the signal on the INA and INB terminals to the other terminals of the LMP91300. The trace between the LC tank and the INA and INB terminals should be as short as possible as shown in part A of Figure 24. Longer traces between the LC tank and the INA and INB terminals can cause ringing at the INA and INB terminals which can produce very noisy proximity readings. If longer traces need to be used split the LC tank so that the capacitor is close to the LMP91300 as shown in part B of Figure 24. If both the L an C have to be located a longer distance away from the LMP91300 small capacitors (15 to 22pF) can be connected between INA and ground and INB and ground as shown in part C of Figure 24.
- Keep the trace between the SWDRV terminal and the transistor short.
- The DAP area on the PCB can be used as the center of a star ground with all other ground terminals connecting to it.

10.2 Layout Example

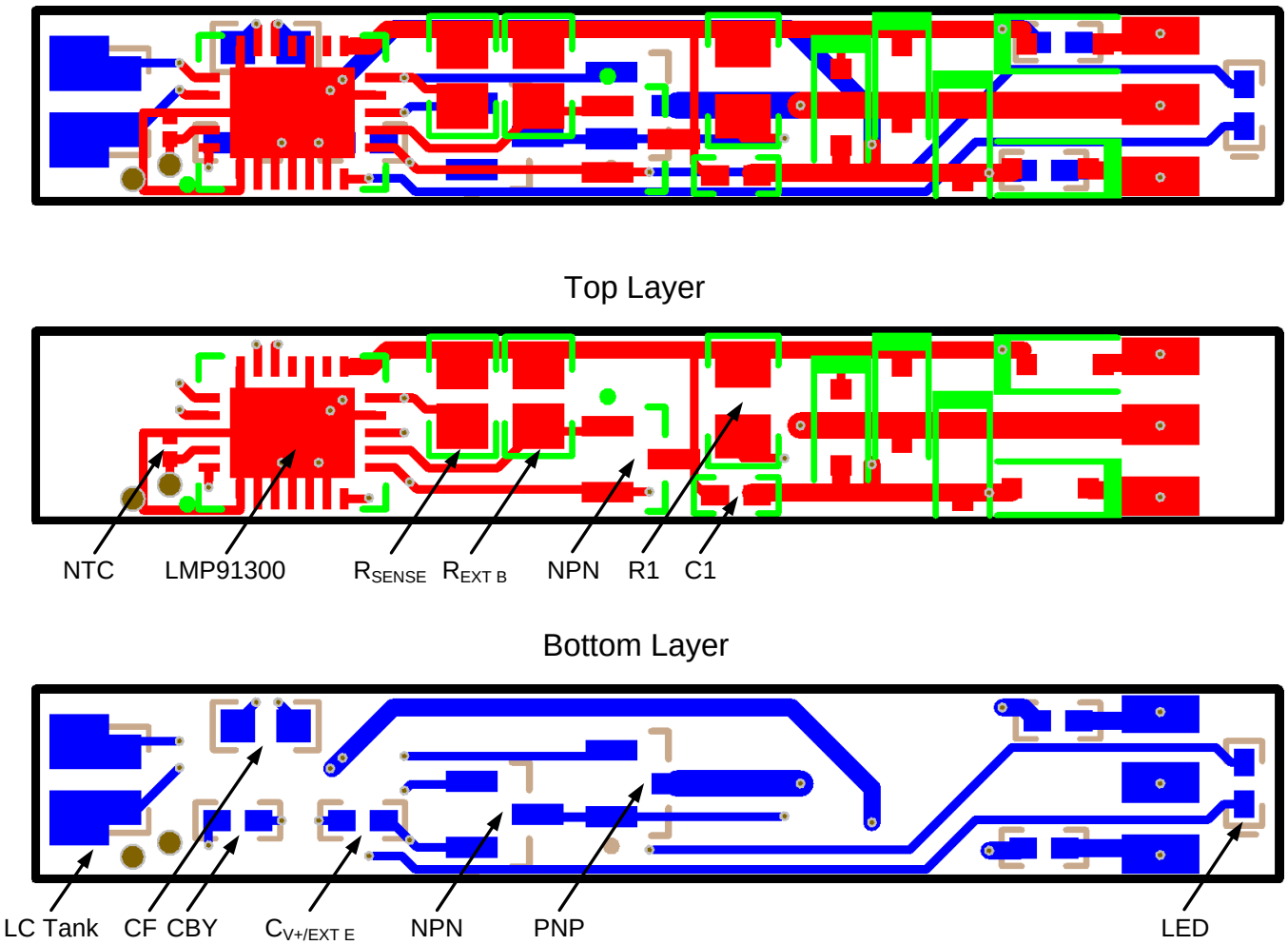

Figure 28. LMP91300 PNP Layout Example

Copyright © 2013–2014, Texas Instruments Incorporated

11 Device and Documentation Support

11.1 Trademarks

All trademarks are the property of their respective owners.

11.2 Electrostatic Discharge Caution

These devices have limited built-in ESD protection. The leads should be shorted together or the device placed in conductive foam during storage or handling to prevent electrostatic damage to the MOS gates.

11.3 Glossary

SLYZ022 — *TI Glossary*.

This glossary lists and explains terms, acronyms and definitions.

12 Mechanical, Packaging, and Orderable Information

The following pages include mechanical packaging and orderable information. This information is the most current data available for the designated devices. This data is subject to change without notice and revision of this document. For browser-based versions of this data sheet, refer to the left-hand navigation.

PACKAGING INFORMATION

Orderable part number	Status (1)	Material type (2)	Package | Pins	Package qty | Carrier	RoHS (3)	Lead finish/ Ball material (4)	MSL rating/ Peak reflow (5)	Op temp (°C)	Part marking (6)
LMP91300NHZJ	Active	Production	WQFN (NHZ) | 24	4500 | LARGE T&R	Yes	SN	Level-3-260C-168 HR	-40 to 125	L91300
LMP91300NHZJ.A	Active	Production	WQFN (NHZ) | 24	4500 | LARGE T&R	Yes	SN	Level-3-260C-168 HR	-40 to 125	L91300
LMP91300NHZR	Active	Production	WQFN (NHZ) | 24	1000 | LARGE T&R	Yes	SN	Level-3-260C-168 HR	-40 to 125	L91300
LMP91300NHZR.A	Active	Production	WQFN (NHZ) | 24	1000 | LARGE T&R	Yes	SN	Level-3-260C-168 HR	-40 to 125	L91300
LMP91300NHZT	Obsolete	Production	WQFN (NHZ) | 24	-	-	Call TI	Call TI	-40 to 125	L91300
LMP91300YZRR	Active	Production	DSBGA (YZR) | 20	3000 | LARGE T&R	Yes	SNAGCU	Level-1-260C-UNLIM	-40 to 125	ATAA
LMP91300YZRR.A	Active	Production	DSBGA (YZR) | 20	3000 | LARGE T&R	Yes	SNAGCU	Level-1-260C-UNLIM	-40 to 125	ATAA
LMP91300YZRT	Obsolete	Production	DSBGA (YZR) | 20	-	-	Call TI	Call TI	-40 to 125	ATAA

(1) **Status:** For more details on status, see our product life cycle.

(2) **Material type:** When designated, preproduction parts are prototypes/experimental devices, and are not yet approved or released for full production. Testing and final process, including without limitation quality assurance, reliability performance testing, and/or process qualification, may not yet be complete, and this item is subject to further changes or possible discontinuation. If available for ordering, purchases will be subject to an additional waiver at checkout, and are intended for early internal evaluation purposes only. These items are sold without warranties of any kind.

(3) **RoHS values:** Yes, No, RoHS Exempt. See the TI RoHS Statement for additional information and value definition.

(4) **Lead finish/Ball material:** Parts may have multiple material finish options. Finish options are separated by a vertical ruled line. Lead finish/Ball material values may wrap to two lines if the finish value exceeds the maximum column width.

(5) **MSL rating/Peak reflow:** The moisture sensitivity level ratings and peak solder (reflow) temperatures. In the event that a part has multiple moisture sensitivity ratings, only the lowest level per JEDEC standards is shown. Refer to the shipping label for the actual reflow temperature that will be used to mount the part to the printed circuit board.

(6) **Part marking:** There may be an additional marking, which relates to the logo, the lot trace code information, or the environmental category of the part.

Multiple part markings will be inside parentheses. Only one part marking contained in parentheses and separated by a "~" will appear on a part. If a line is indented then it is a continuation of the previous line and the two combined represent the entire part marking for that device.

Important Information and Disclaimer: The information provided on this page represents TI's knowledge and belief as of the date that it is provided. TI bases its knowledge and belief on information provided by third parties, and makes no representation or warranty as to the accuracy of such information. Efforts are underway to better integrate information from third parties. TI has taken and continues to take reasonable steps to provide representative and accurate information but may not have conducted destructive testing or chemical analysis on incoming materials and chemicals. TI and TI suppliers consider certain information to be proprietary, and thus CAS numbers and other limited information may not be available for release.

In no event shall TI's liability arising out of such information exceed the total purchase price of the TI part(s) at issue in this document sold by TI to Customer on an annual basis.

TAPE AND REEL INFORMATION

REEL DIMENSIONS

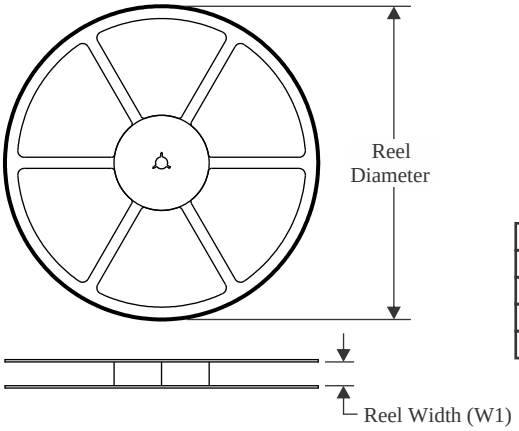

TAPE DIMENSIONS

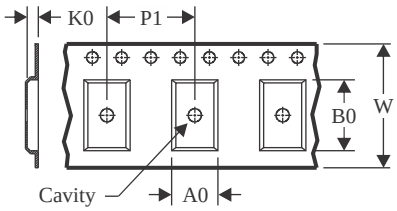

A0	Dimension designed to accommodate the component width
B0	Dimension designed to accommodate the component length
K0	Dimension designed to accommodate the component thickness
W	Overall width of the carrier tape
P1	Pitch between successive cavity centers

QUADRANT ASSIGNMENTS FOR PIN 1 ORIENTATION IN TAPE

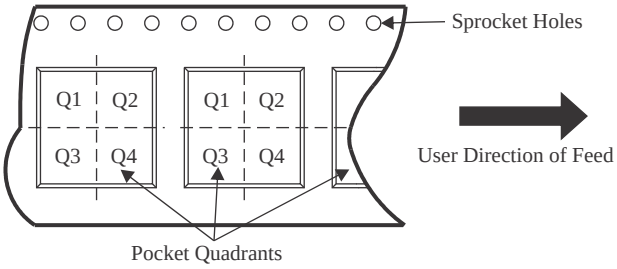

*All dimensions are nominal

Device	Package Type	Package Drawing	Pins	SPQ	Reel Diameter (mm)	Reel Width W1 (mm)	A0 (mm)	B0 (mm)	K0 (mm)	P1 (mm)	W (mm)	Pin1 Quadrant
LMP91300NHZJ	WQFN	NHZ	24	4500	330.0	12.4	4.3	5.3	1.3	8.0	12.0	Q1
LMP91300NHZR	WQFN	NHZ	24	1000	177.8	12.4	4.3	5.3	1.3	8.0	12.0	Q1
LMP91300YZRR	DSBGA	YZR	20	3000	178.0	8.4	2.31	2.88	0.76	4.0	8.0	Q1

TAPE AND REEL BOX DIMENSIONS

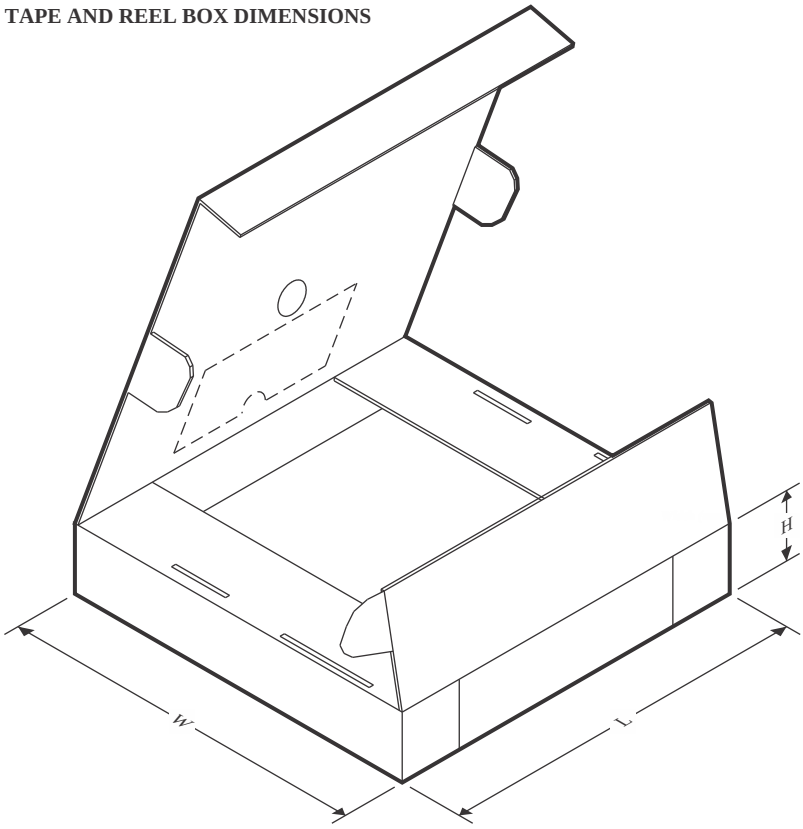

*All dimensions are nominal

Device	Package Type	Package Drawing	Pins	SPQ	Length (mm)	Width (mm)	Height (mm)
LMP91300NHZJ	WQFN	NHZ	24	4500	356.0	356.0	36.0
LMP91300NHZR	WQFN	NHZ	24	1000	208.0	191.0	35.0
LMP91300YZRR	DSBGA	YZR	20	3000	208.0	191.0	35.0

YZR0020

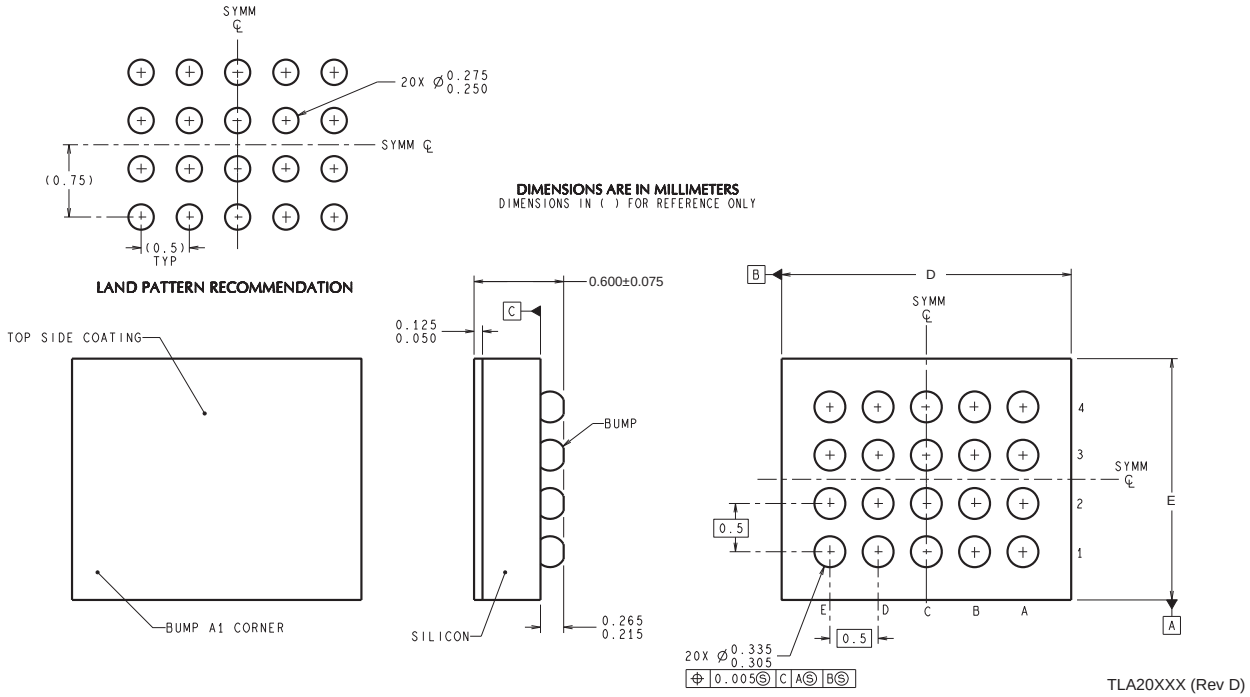

D: Max = 2.706 mm, Min =2.646 mm

E: Max = 2.084 mm, Min =2.024 mm

4215053/A 12/12

NOTES: A. All linear dimensions are in millimeters. Dimensioning and tolerancing per ASME Y14.5M-1994.
B. This drawing is subject to change without notice.

NHZ0024B

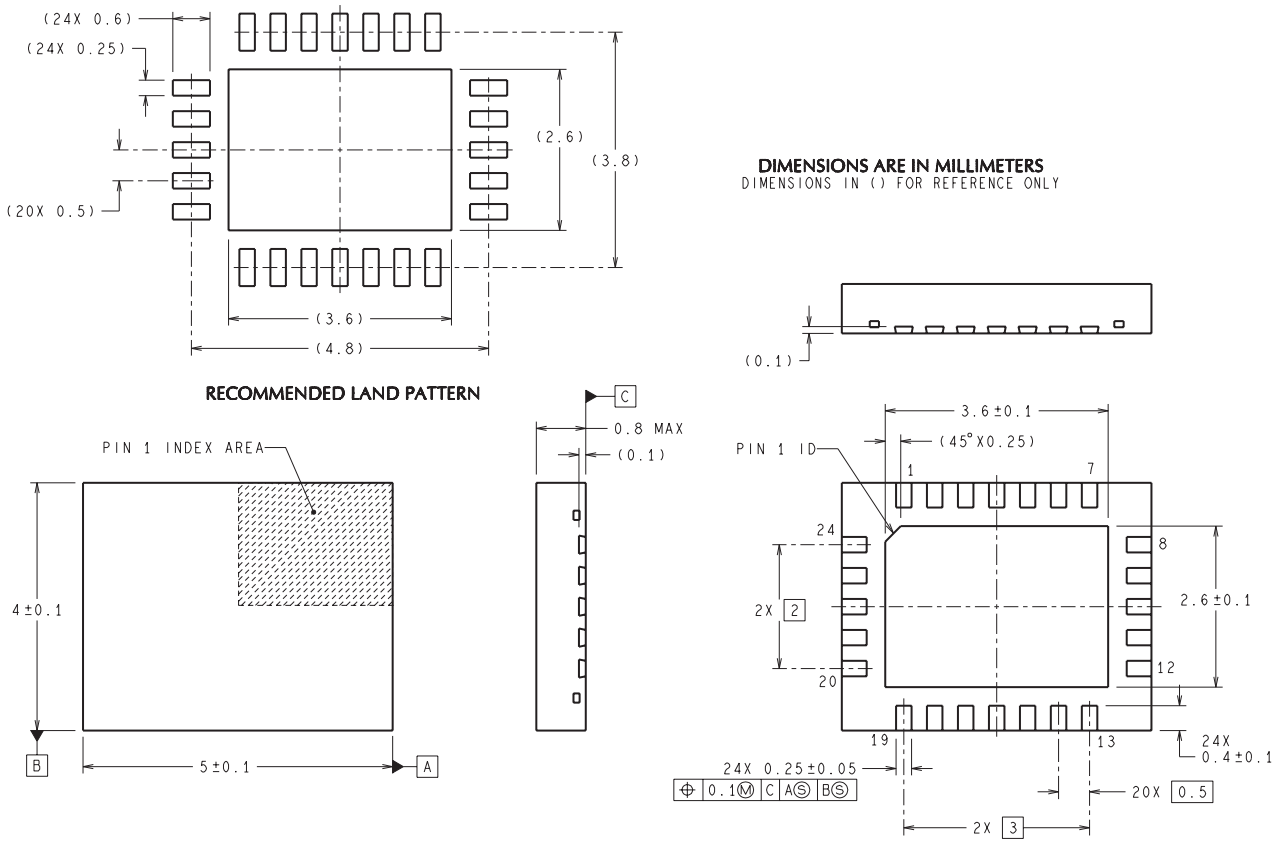

SQA24B (Rev A)

IMPORTANT NOTICE AND DISCLAIMER

TI PROVIDES TECHNICAL AND RELIABILITY DATA (INCLUDING DATASHEETS), DESIGN RESOURCES (INCLUDING REFERENCE DESIGNS), APPLICATION OR OTHER DESIGN ADVICE, WEB TOOLS, SAFETY INFORMATION, AND OTHER RESOURCES “AS IS” AND WITH ALL FAULTS, AND DISCLAIMS ALL WARRANTIES, EXPRESS AND IMPLIED, INCLUDING WITHOUT LIMITATION ANY IMPLIED WARRANTIES OF MERCHANTABILITY, FITNESS FOR A PARTICULAR PURPOSE OR NON-INFRINGEMENT OF THIRD PARTY INTELLECTUAL PROPERTY RIGHTS.

These resources are intended for skilled developers designing with TI products. You are solely responsible for (1) selecting the appropriate TI products for your application, (2) designing, validating and testing your application, and (3) ensuring your application meets applicable standards, and any other safety, security, regulatory or other requirements.

These resources are subject to change without notice. TI grants you permission to use these resources only for development of an application that uses the TI products described in the resource. Other reproduction and display of these resources is prohibited. No license is granted to any other TI intellectual property right or to any third party intellectual property right. TI disclaims responsibility for, and you fully indemnify TI and its representatives against any claims, damages, costs, losses, and liabilities arising out of your use of these resources.

TI’s products are provided subject to TI’s Terms of Sale, TI’s General Quality Guidelines, or other applicable terms available either on ti.com or provided in conjunction with such TI products. TI’s provision of these resources does not expand or otherwise alter TI’s applicable warranties or warranty disclaimers for TI products. Unless TI explicitly designates a product as custom or customer-specified, TI products are standard, catalog, general purpose devices.

TI objects to and rejects any additional or different terms you may propose.

Copyright © 2025, Texas Instruments Incorporated

Last updated 10/2025