LMR16020 SIMPLE SWITCHER® 60 V, 2 A Step-Down Converter With 40 µA I_Q

1 Features

- 4.3 V to 60 V Input Range
- 2 A Continuous Output Current
- Ultra-low 40 µA Operating Quiescent Current
- 155 mΩ High-Side MOSFET
- Current Mode Control
- Adjustable Switching Frequency from 200 kHz to 2.5 MHz
- Frequency Synchronization to External Clock
- Internal Compensation for Ease of Use
- High Duty Cycle Operation Supported
- Precision Enable Input
- Power-Good Flag
- 1 µA Shutdown Current
- Thermal, Overvoltage and Short Protection
- 8-Pin HSOIC with PowerPAD™ Package

2 Applications

- Automotive Battery Regulation
- Industrial Power Supplies
- Telecom and Datacom Systems
- General Purpose Wide Vin Regulation

3 Description

The LMR16020 is a 60 V, 2 A SIMPLE SWITCHER® step down regulator with an integrated high-side MOSFET. With a wide input range from 4.3 V to 60 V, it's suitable for various applications from industrial to automotive for power conditioning from unregulated sources. The regulator's quiescent current is 40 µA in Sleep-mode, which is suitable for battery powered systems. An ultra-low 1 µA current in shutdown mode can further prolong battery life. A wide adjustable switching frequency range allows either efficiency or external component size to be optimized. Internal loop compensation means that the user is free from the tedious task of loop compensation design. This also minimizes the external components of the device. A precision enable input allows simplification of regulator control and system power sequencing. The device also has built-in protection features such as cycle-by-cycle current limit, thermal sensing and shutdown due to excessive power dissipation, and output overvoltage protection.

The LMR16020 is available in an 8-pin HSOIC package with exposed pad for low thermal resistance.

Device Information (1)

PART NUMBER	PACKAGE	BODY SIZE (NOM)
LMR16020PDDAR	HSOIC (8)	4.89 mm x 3.90 mm

(1) For all available packages, see the orderable addendum at the end of the datasheet.

Simplified Schematic

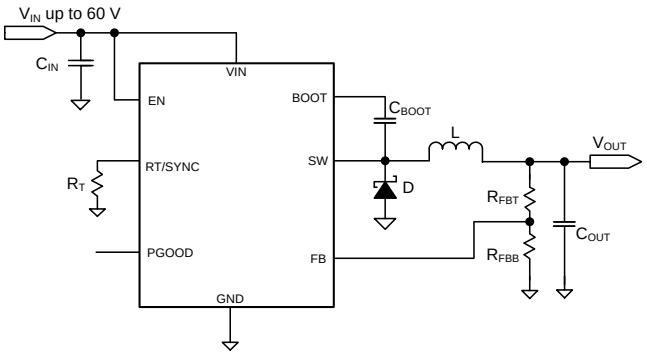

Copyright © 2016, Texas Instruments Incorporated

Efficiency vs Output Current
Vout = 5 V, fsw = 500 kHz

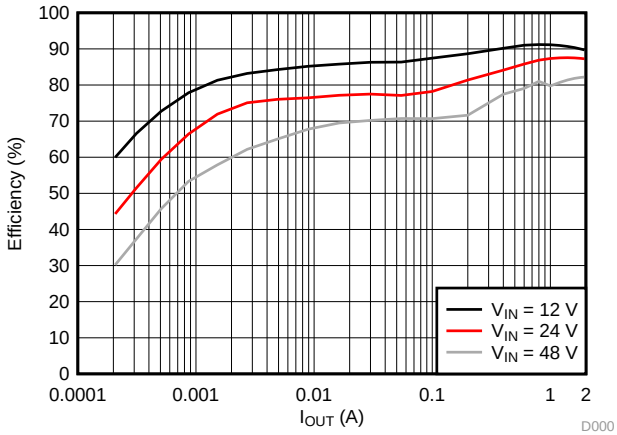

An IMPORTANT NOTICE at the end of this data sheet addresses availability, warranty, changes, use in safety-critical applications, intellectual property matters and other important disclaimers. PRODUCTION DATA.

Table of Contents

1 Features ... 1
2 Applications ... 1
3 Description ... 1
4 Revision History ... 2
5 Pin Configuration and Functions ... 3
6 Specifications ... 4
6.1 Absolute Maximum Ratings ... 4
6.2 ESD Ratings ... 4
6.3 Recommended Operating Conditions ... 4
6.4 Thermal Information ... 5
6.5 Electrical Characteristics ... 5
6.6 Switching Characteristics ... 7
6.7 Typical Characteristics ... 8
7 Detailed Description ... 10
7.1 Overview ... 10
7.2 Functional Block Diagram ... 11
7.3 Feature Description ... 11
7.4 Device Functional Modes ... 18
8 Application and Implementation ... 19
8.1 Application Information ... 19
8.2 Typical Application ... 19
9 Power Supply Recommendations ... 24
10 Layout ... 24
10.1 Layout Guidelines ... 24
10.2 Layout Example ... 25
11 Device and Documentation Support ... 26
11.1 Device Support ... 26
11.2 Community Resources ... 26
11.3 Trademarks ... 26
11.4 Electrostatic Discharge Caution ... 26
11.5 Glossary ... 26
12 Mechanical, Packaging, and Orderable Information ... 26

4 Revision History

Changes from Original (December 2015) to Revision A	Page
• Changed from Product Preview to Production Data with full version of the datasheet	1

Copyright © 2015–2016, Texas Instruments Incorporated

5 Pin Configuration and Functions

DDA Package
8-Pin (HSOIC)
Top View

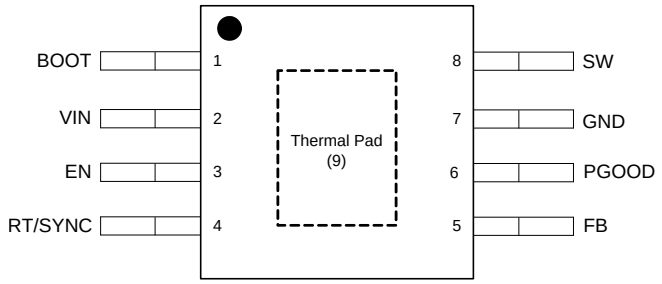

Pin Functions

PIN		TYPE (1)	DESCRIPTION
NAME	NO.		
BOOT	1	P	Bootstrap capacitor connection for high-side MOSFET driver. Connect a high quality 0.1 µF capacitor from BOOT to SW.
VIN	2	P	Connect to power supply and bypass capacitors C_{IN}. Path from VIN pin to high frequency bypass C_{IN} and GND must be as short as possible.
EN	3	A	Enable pin, with internal pull-up current source. Pull below 1.2 V to disable. Float or connect to VIN to enable. Adjust the input under voltage lockout with two resistors. See the Enable and Adjusting Under voltage lockout section.
RT/SYNC	4	A	Resistor Timing or External Clock input. An internal amplifier holds this pin at a fixed voltage when using an external resistor to ground to set the switching frequency. If the pin is pulled above the PLL upper threshold, a mode change occurs and the pin becomes a synchronization input. The internal amplifier is disabled and the pin is a high impedance clock input to the internal PLL. If clocking edges stop, the internal amplifier is re-enabled and the operating mode returns to frequency programming by resistor.
FB	5	A	Feedback input pin, connect to the feedback divider to set V_{OUT}. Do not short this pin to ground during operation.
PGOOD	6	A	Power-Good pin, open drain output for power-good flag, use a 10 kΩ to 100 kΩ pull-up resistor to logic rail or other DC voltage no higher than 7 V.
GND	7	G	System ground pin.
SW	8	P	Switching output of the regulator. Internally connected to high-side power MOSFET. Connect to power inductor.
Thermal Pad	9	G	Major heat dissipation path of the die. Must be connected to ground plane on PCB.

(1) A = Analog, P = Power, G = Ground

6 Specifications

6.1 Absolute Maximum Ratings

Over the recommended operating junction temperature range of -40 °C to 125 °C (unless otherwise noted) (1)

		MIN	MAX	UNIT
Input Voltages	VIN, EN to GND	-0.3	65	V
	BOOT to GND	-0.3	71	
	FB to GND	-0.3	7	
	RT/SYNC to GND	-0.3	3.6	
	PGOOD to GND	-0.3	7	
Output Voltages	BOOT to SW		6.5	V
	SW to GND	-3	65	
T_J	Junction temperature	-40	150	°C
T_{stg}	Storage temperature	-65	150	°C

(1) Stresses beyond those listed under *Absolute Maximum Ratings* may cause permanent damage to the device. These are stress ratings only, which do not imply functional operation of the device at these or any other conditions beyond those indicated under *Recommended Operating Conditions*. Exposure to absolute-maximum-rated conditions for extended periods may affect device reliability.

6.2 ESD Ratings

		VALUE	UNIT
$V_{(ESD)}$ Electrostatic discharge	Human-body model (HBM) (1)	±2000	V
	Charged-device model (CDM) (2)	±500	

(1) JEDEC document JEP155 states that 500-V HBM allows safe manufacturing with a standard ESD control process.
(2) JEDEC document JEP157 states that 250-V CDM allows safe manufacturing with a standard ESD control process.

6.3 Recommended Operating Conditions

Over the recommended operating junction temperature range of -40 °C to 125 °C (unless otherwise noted) (1)

		MIN	MAX	UNIT
Buck Regulator	VIN	4.3	60	V
	VOUT	0.8	50	
	BOOT		66	
	SW	-1	60	
	FB	0	5	
Control	EN	0	60	V
	RT/SYNC	0	3.3	
	PGOOD to GND	0	5	
Frequency	Switching frequency range at RT mode	200	2500	kHz
	Switching frequency range at SYNC mode	250	2300	
Temperature	Operating junction temperature, T_J	-40	125	°C

(1) Operating Ratings indicate conditions for which the device is intended to be functional, but do not guarantee specific performance limits. For guaranteed specifications, see *Electrical Characteristics* .

Copyright © 2015–2016, Texas Instruments Incorporated

6.4 Thermal Information

THERMAL METRIC (1) (2)		LMR16020 DDA (HSOIC) 8 PINS	UNIT
$R_{\theta JA}$	Junction-to-ambient thermal resistance	42.5	°C/W
ψ_{JT}	Junction-to-top characterization parameter	9.9	°C/W
ψ_{JB}	Junction-to-board characterization parameter	25.4	°C/W
$R_{\theta JC(top)}$	Junction-to-case (top) thermal resistance	56.1	°C/W
$R_{\theta JC(bot)}$	Junction-to-case (bottom) thermal resistance	3.8	°C/W
$R_{\theta JB}$	Junction-to-board thermal resistance	25.5	°C/W

(1) For more information about traditional and new thermal metrics, see the *Semiconductor and IC Package Thermal Metrics* application report, SPRA953.
(2) Power rating at a specific ambient temperature T_A should be determined with a maximum junction temperature (T_J) of 125 °C, which is illustrated in *Recommended Operating Conditions* section.

6.5 Electrical Characteristics

Limits apply over the recommended operating junction temperature (T_J) range of -40 °C to +125 °C, unless otherwise stated. Minimum and Maximum limits are specified through test, design or statistical correlation. Typical values represent the most likely parametric norm at T_J = 25 °C, and are provided for reference purposes only. Unless otherwise specified, the following conditions apply: V_{IN} = 4.3 V to 60 V

PARAMETER		TEST CONDITIONS	MIN	TYP	MAX	UNIT
POWER SUPPLY (VIN PIN)						
V_{IN}	Operation input voltage		4.3		60	V
UVLO	Under voltage lockout thresholds	Rising threshold	3.8	4.0	4.2	V
		Hysteresis		285		mV
I_{SHDN}	Shutdown supply current	V_{EN} = 0 V, T_A = 25 °C, 4.3 V ≤ V_{IN} ≤ 60 V		1.0	3.0	µA
I_Q	Operating quiescent current (non-switching)	V_{FB} = 1.0 V, T_A = 25 °C		40		µA
ENABLE (EN PIN)						
V_{EN_TH}	EN Threshold Voltage		1.05	1.20	1.38	V
I_{EN_PIN}	EN PIN current	Enable threshold +50 mV		-4.6		µA
		Enable threshold -50 mV		-1.0		
I_{EN_HYS}	EN hysteresis current			-3.6		µA
SOFT-START						
t_{SS}	Internal soft-start time	10% to 90% of FB voltage		4.0		ms
POWER GOOD (PGOOD PIN)						
V_{PG_UV}	Power-good flag under voltage tripping threshold	POWER GOOD (% of FB voltage)		94		%
		POWER BAD (% of FB voltage)		92		%
V_{PG_OV}	Power-good flag over voltage tripping threshold	POWER BAD (% of FB voltage)		109		%
		POWER GOOD (% of FB voltage)		107		%
V_{PG_HYS}	Power-good flag recovery hysteresis	% of FB voltage		2		%
I_{PG}	PGOOD leakage current at high level output	$V_{Pull\text{-}Up}$ = 5 V		10	200	nA
V_{PG_LOW}	PGOOD low level output voltage	$I_{Pull\text{-}Up}$ = 1 mA		0.1		V
$V_{IN_PG_MIN}$	Minimum VIN for valid PGOOD output	$V_{Pull\text{-}Up}$ < 5 V at $I_{Pull\text{-}Up}$ = 100 µA		1.6	1.95	V
VOLTAGE REFERENCE (FB PIN)						
V_{FB}	Feedback voltage	T_J = 25 °C	0.746	0.750	0.754	V
		T_J = -40 °C to 125 °C	0.735	0.750	0.765	V

Copyright © 2015–2016, Texas Instruments Incorporated

Electrical Characteristics (continued)

Limits apply over the recommended operating junction temperature (T_J) range of -40 °C to +125 °C, unless otherwise stated. Minimum and Maximum limits are specified through test, design or statistical correlation. Typical values represent the most likely parametric norm at T_J = 25 °C, and are provided for reference purposes only. Unless otherwise specified, the following conditions apply: V_{IN} = 4.3 V to 60 V

PARAMETER		TEST CONDITIONS	MIN	TYP	MAX	UNIT
HIGH-SIDE MOSFET						
R_{DS_ON}	On-resistance	V_{IN} = 12 V, BOOT to SW = 5.8 V		155	320	mΩ
High-side MOSFET CURRENT LIMIT						
I_{LIMT}	Current limit	V_{IN} = 12 V, T_A = 25 °C, Open Loop	2.5	3.15	3.8	A
THERMAL PERFORMANCE						
T_{SHDN}	Thermal shutdown threshold			170		°C
T_{HYS}	Hysteresis			12		

Copyright © 2015–2016, Texas Instruments Incorporated

6.6 Switching Characteristics

Over the recommended operating junction temperature range of -40 °C to 125 °C (unless otherwise noted)

PARAMETER		TEST CONDITIONS	MIN	TYP	MAX	UNIT
f_{SW}	Switching frequency	R_T = 11.5 kΩ	1758	1912	2066	kHz
	Switching frequency range at SYNC mode		250		2300	
V_{SYNC_HI}	SYNC clock high level threshold		1.7			V
V_{SYNC_LO}	SYNC clock low level threshold				0.5	
T_{SYNC_MIN}	Minimum SYNC input pulse width	Measured at 500 kHz, V_{SYNC_HI} > 3 V, V_{SYNC_LO} < 0.3 V		30		ns
T_{LOCK_IN}	PLL lock in time	Measured at 500 kHz		100		µs
T_{ON_MIN}	Minimum controllable on time	V_{IN} = 12 V, BOOT to SW = 5.8 V, I_{Load} = 1 A		90		ns
D_{MAX}	Maximum duty cycle	f_{SW} = 200 kHz		97%		

6.7 Typical Characteristics

Unless otherwise specified the following conditions apply: V_{IN} = 24 V, f_{SW} = 500 KHz, L = 10 µH, C_{OUT} = 2 × 47 µF, T_A = 25 °C.

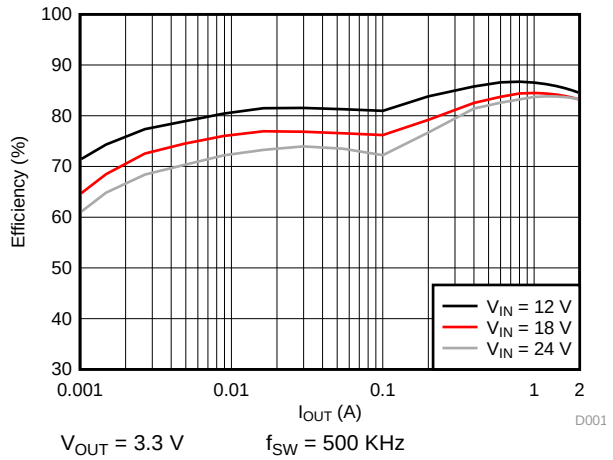

Figure 1. Efficiency vs. Load Current

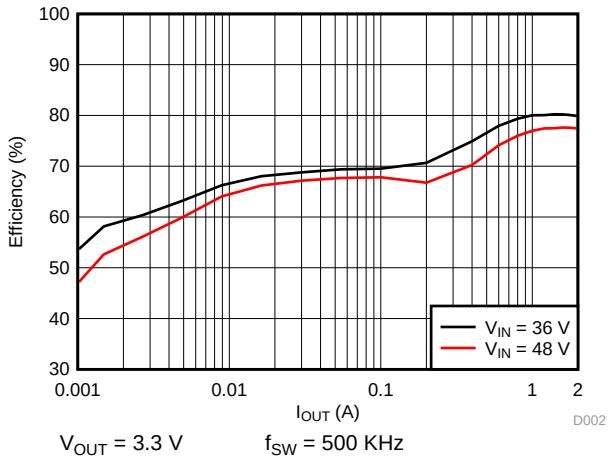

Figure 2. Efficiency vs. Load Current

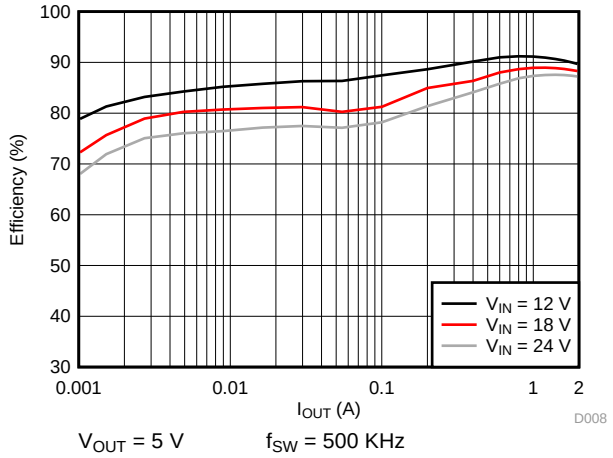

Figure 3. Efficiency vs. Load Current

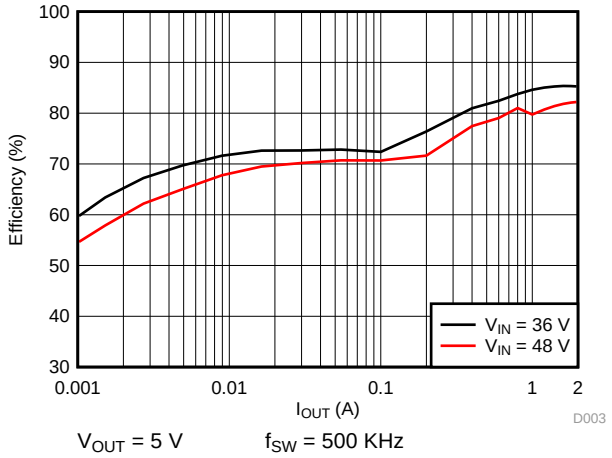

Figure 4. Efficiency vs. Load Current

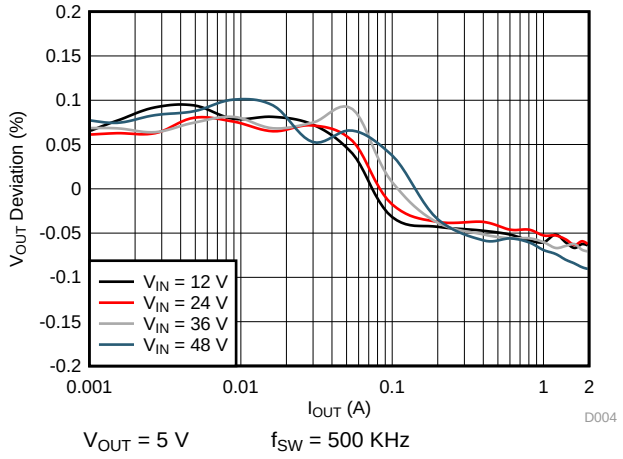

Figure 5. Load Regulation

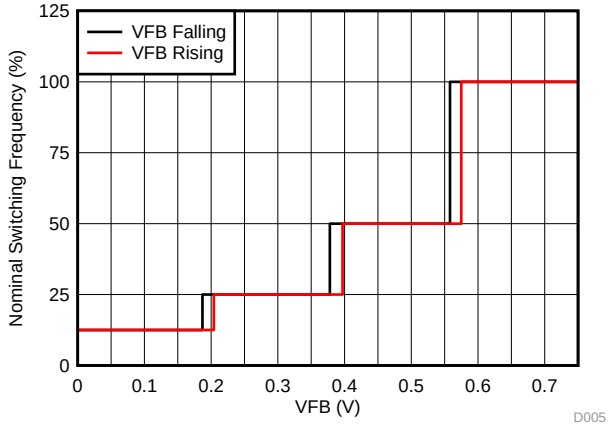

Figure 6. Frequency vs V_{FB}

Copyright © 2015–2016, Texas Instruments Incorporated

Typical Characteristics (continued)

Unless otherwise specified the following conditions apply: V_{IN} = 24 V, f_{SW} = 500 KHz, L = 10 µH, C_{OUT} = 2 × 47 µF, T_A = 25 °C.

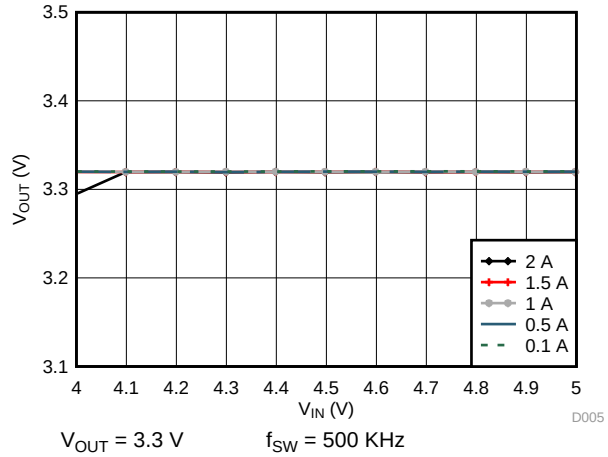

Figure 7. Dropout Curve

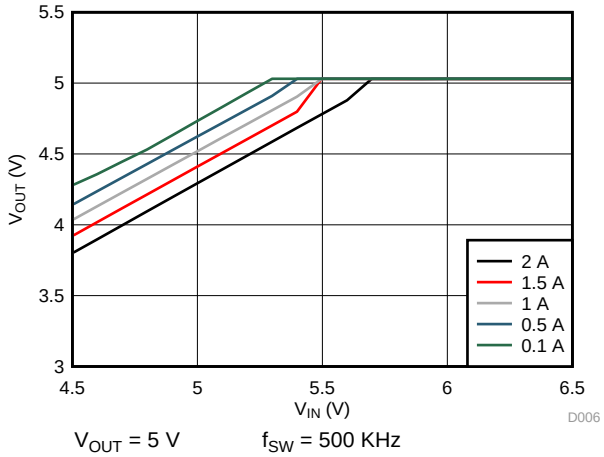

Figure 8. Dropout Curve

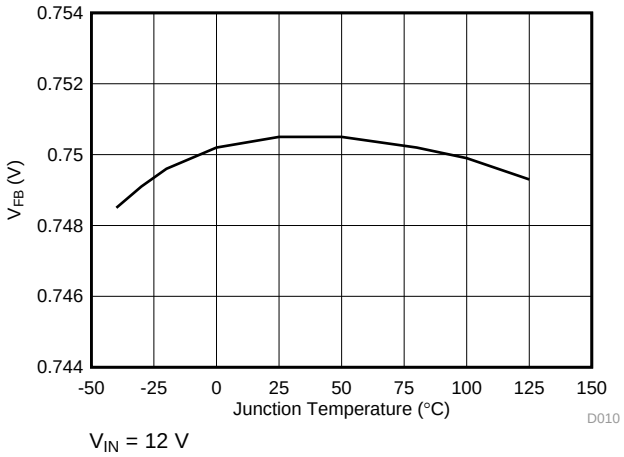

Figure 9. Voltage Reference vs Junction Temperature

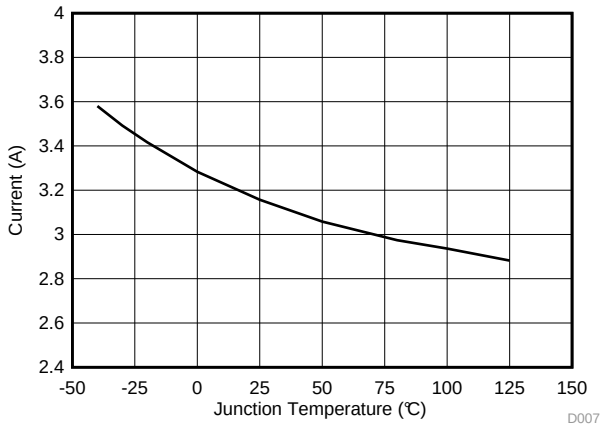

Figure 10. High-Side Current Limit vs Junction Temperature

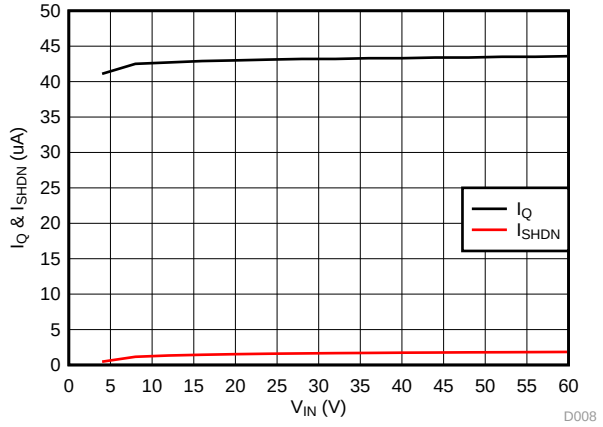

Figure 11. Shut-down Current and Quiescent Current

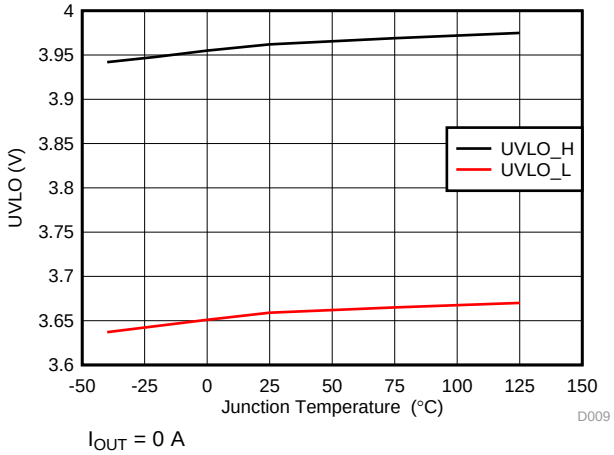

Figure 12. UVLO Threshold

7 Detailed Description

7.1 Overview

The LMR16020 SIMPLE SWITCHER® regulator is an easy to use step-down DC-DC converter that operates from a 4.3 V to 60 V supply voltage. It integrates a 155 mΩ (typical) high-side MOSFET, and is capable of delivering up to 2 A DC load current with exceptional efficiency and thermal performance in a very small solution size. The operating current is typically 40 µA under no load condition (not switching). When the device is disabled, the supply current is typically 1 µA. An extended family is available in 1 A and 3 A load options in pin to pin compatible packages.

The LMR16020 implements constant frequency peak current mode control with Sleep-mode at light load to achieve high efficiency. The device is internally compensated, which reduces design time, and requires fewer external components. The switching frequency is programmable from 200 kHz to 2.5 MHz by an external resistor R_T. The LMR16020 is also capable of synchronization to an external clock within the 250 kHz to 2.3 MHz frequency range, which allows the device to be optimized to fit small board space at higher frequency, or high efficient power conversion at lower frequency.

Other features are included for more comprehensive system requirements, including precision enable, and approximate 97% duty cycle by BOOT capacitor recharge circuit. These features provide a flexible and easy to use platform for a wide range of applications. Protection features include over temperature shutdown, V_{OUT} over voltage protection (OVP), V_{IN} under-voltage lockout (UVLO), cycle-by-cycle current limit, and short-circuit protection with frequency fold-back.

Copyright © 2015–2016, Texas Instruments Incorporated

7.2 Functional Block Diagram

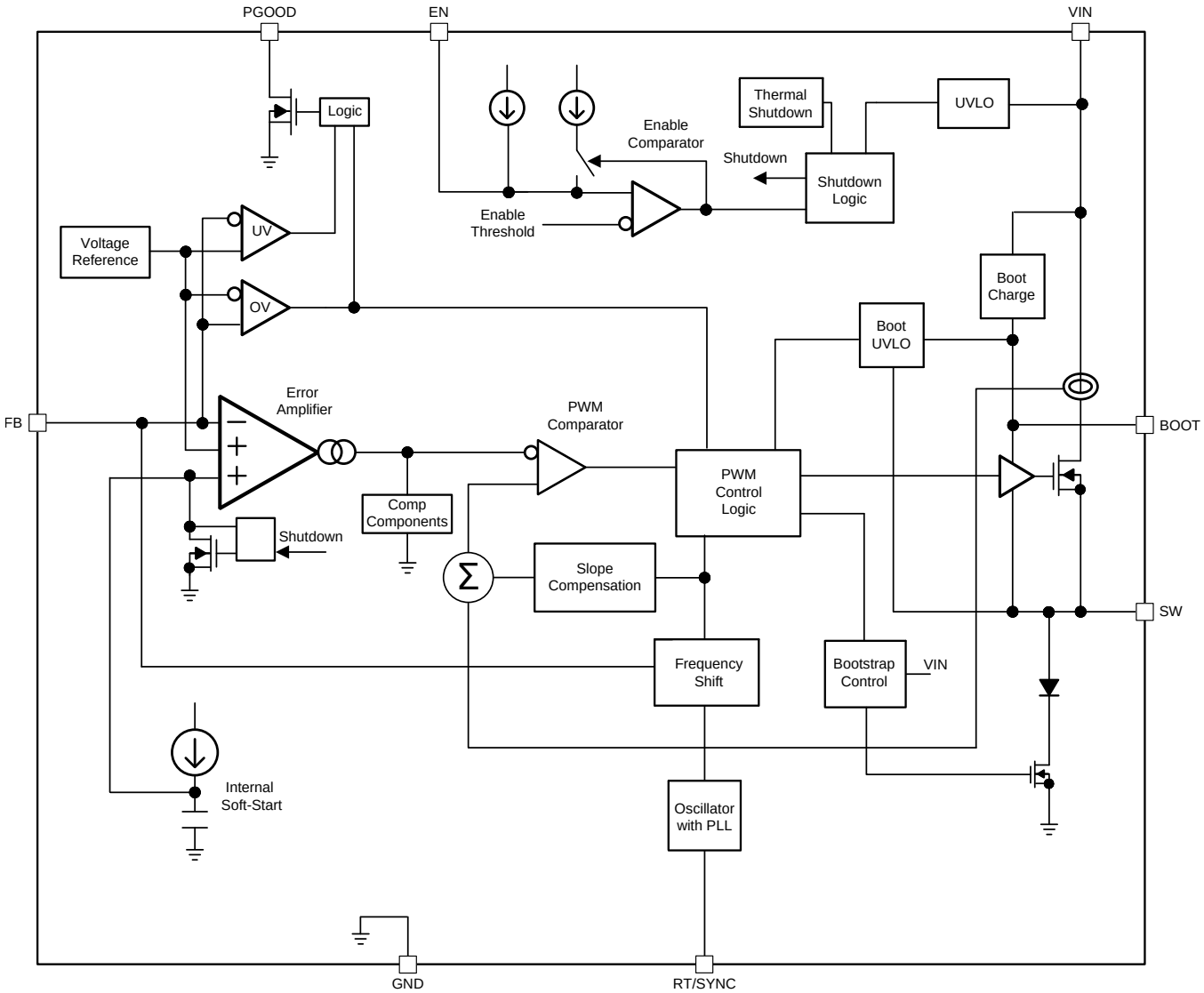

Copyright © 2016, Texas Instruments Incorporated

7.3 Feature Description

7.3.1 Fixed Frequency Peak Current Mode Control

The following operating description of the LMR16020 will refer to the *Functional Block Diagram* and to the waveforms in Figure 13. LMR16020 output voltage is regulated by turning on the high-side N-MOSFET with controlled ON time. During high-side switch ON time, the SW pin voltage swings up to approximately V_{IN}, and the inductor current i_L increase with linear slope (V_{IN} – V_{OUT}) / L. When high-side switch is off, inductor current discharges through freewheel diode with a slope of –V_{OUT} / L. The control parameter of Buck converter is defined as Duty Cycle D = t_{ON} / T_{SW}, where t_{ON} is the high-side switch ON time and T_{SW} is the switching period. The regulator control loop maintains a constant output voltage by adjusting the duty cycle D. In an ideal Buck converter, where losses are ignored, D is proportional to the output voltage and inversely proportional to the input voltage: D = V_{OUT} / V_{IN}.

Feature Description (continued)

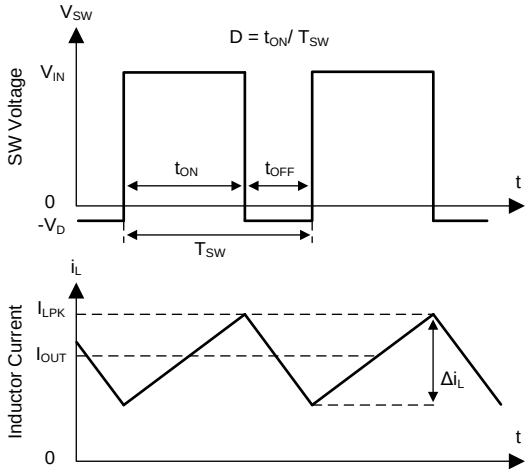

Figure 13. SW Node and Inductor Current Waveforms in Continuous Conduction Mode (CCM)

The LMR16020 employs fixed frequency peak current mode control. A voltage feedback loop is used to get accurate DC voltage regulation by adjusting the peak current command based on voltage offset. The peak inductor current is sensed from the high-side switch and compared to the peak current to control the ON time of the high-side switch. The voltage feedback loop is internally compensated, which allows for fewer external components, makes it easy to design, and provides stable operation with almost any combination of output capacitors. The regulator operates with fixed switching frequency at normal load condition. At very light load, the LMR16020 will operate in Sleep-mode to maintain high efficiency and the switching frequency will decrease with reduced load current.

7.3.2 Slope Compensation

The LMR16020 adds a compensating ramp to the MOSFET switch current sense signal. This slope compensation prevents sub-harmonic oscillations at duty cycles greater than 50%. The peak current limit of the high-side switch is not affected by the slope compensation and remains constant over the full duty cycle range.

7.3.3 Sleep-mode

The LMR16020 operates in Sleep-mode at light load currents to improve efficiency by reducing switching and gate drive losses. If the output voltage is within regulation and the peak switch current at the end of any switching cycle is below the current threshold of 300 mA, the device enters Sleep-mode. The Sleep-mode current threshold is the peak switch current level corresponding to a nominal internal COMP voltage of 400 mV.

When in Sleep-mode, the internal COMP voltage is clamped at 400 mV and the high-side MOSFET is inhibited, and the device draws only 40 µA (typical) input quiescent current. Since the device is not switching, the output voltage begins to decay. The voltage control loop responds to the falling output voltage by increasing the internal COMP voltage. The high-side MOSFET is enabled and switching resumes when the error amplifier lifts internal COMP voltage above 400 mV. The output voltage recovers to the regulated value, and internal COMP voltage eventually falls below the Sleep-mode threshold at which time the device again enters Sleep-mode.

7.3.4 Low Dropout Operation and Bootstrap Voltage (BOOT)

The LMR16020 provides an integrated bootstrap voltage regulator. A small capacitor between the BOOT and SW pins provides the gate drive voltage for the high-side MOSFET. The BOOT capacitor is refreshed when the high-side MOSFET is off and the external low side diode conducts. The recommended value of the BOOT capacitor is 0.1 µF. A ceramic capacitor with an X7R or X5R grade dielectric with a voltage rating of 16 V or greater is recommended for stable performance over temperature and voltage.

Copyright © 2015–2016, Texas Instruments Incorporated

Feature Description (continued)

When operating with a low voltage difference from input to output, the high-side MOSFET of the LMR16020 will operate at approximate 97% duty cycle. When the high-side MOSFET is continuously on for 5 or 6 switching cycles (5 or 6 switching cycles for frequency lower than 1 MHz, and 10 or 11 switching cycles for frequency higher than 1 MHz) and the voltage from BOOT to SW drops below 3.2 V, the high-side MOSFET is turned off and an integrated low side MOSFET pulls SW low to recharge the BOOT capacitor.

Since the gate drive current sourced from the BOOT capacitor is small, the high-side MOSFET can remain on for many switching cycles before the MOSFET is turned off to refresh the capacitor. Thus the effective duty cycle of the switching regulator can be high, approaching 97%. The effective duty cycle of the converter during dropout is mainly influenced by the voltage drops across the power MOSFET, the inductor resistance, the low side diode voltage and the printed circuit board resistance.

7.3.5 Adjustable Output Voltage

The internal voltage reference produces a precise 0.75 V (typical) voltage reference over the operating temperature range. The output voltage is set by a resistor divider from output voltage to the FB pin. It is recommended to use 1% tolerance or better and temperature coefficient of 100 ppm or less divider resistors. Select the low side resistor R_{FBB} for the desired divider current and use Equation 1 to calculate high-side R_{FBT}. Larger value divider resistors are good for efficiency at light load. However, if the values are too high, the regulator will be more susceptible to noise and voltage errors from the FB input current may become noticeable. R_{FBB} in the range from 10 kΩ to 100 kΩ is recommended for most applications.

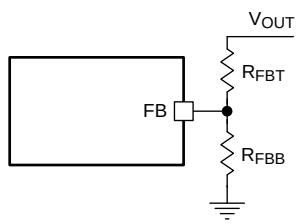

Figure 14. Output Voltage Setting

$$R_{FBT} = \frac{V_{OUT} - 0.75}{0.75} \times R_{FBB} \tag{1}$$

7.3.6 Enable and Adjustable Under-voltage Lockout

The LMR16020 is enabled when the VIN pin voltage rises above 4.0 V (typical) and the EN pin voltage exceeds the enable threshold of 1.2 V (typical). The LMR16020 is disabled when the VIN pin voltage falls below 3.715 V (typical) or when the EN pin voltage is below 1.2 V. The EN pin has an internal pull-up current source (typically I_{EN} = 1 µA) that enables operation of the LMR16020 when the EN pin is floating.

Many applications will benefit from the employment of an enable divider R_{ENT} and R_{ENB} in Figure 15 to establish a precision system UVLO level for the stage. System UVLO can be used for supplies operating from utility power as well as battery power. It can be used for sequencing, ensuring reliable operation, or supply protection, such as a battery. An external logic signal can also be used to drive EN input for system sequencing and protection.

When EN terminal voltage exceeds 1.2 V, an additional hysteresis current (typically I_{HYS} = 3.6 µA) is sourced out of EN terminal. When the EN terminal is pulled below 1.2 V, I_{HYS} current is removed. This additional current facilitates adjustable input voltage UVLO hysteresis. Use Equation 2 and Equation 3 to calculate R_{ENT} and R_{ENB} for desired UVLO hysteresis voltage.

Feature Description (continued)

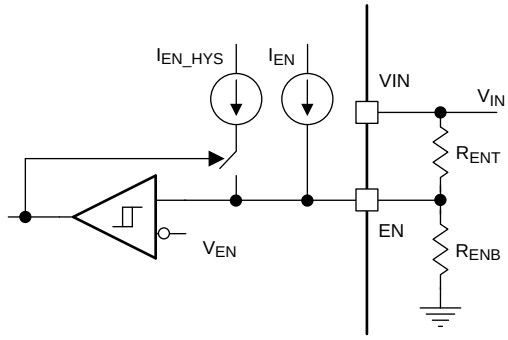

Figure 15. System UVLO By Enable Dividers

$$R_{ENT} = \frac{V_{START} - V_{STOP}}{I_{HYS}} \tag{2}$$

$$R_{ENB} = \frac{V_{EN}}{\frac{V_{START} - V_{EN}}{R_{ENT}} + I_{EN}} \tag{3}$$

where V_{START} is the desired voltage threshold to enable LMR16020, V_{STOP} is the desired voltage threshold to disable device, I_{EN} = 1 µA and I_{HYS} = 3.6 µA typically.

7.3.7 Switching Frequency and Synchronization (RT/SYNC)

The switching frequency of the LMR16020 can be programmed by the resistor RT from the RT/SYNC pin and GND pin. The RT/SYNC pin can't be left floating or shorted to ground. To determine the timing resistance for a given switching frequency, use Equation 4 or the curve in Figure 16. Table 1 gives typical R_T values for a given f_{SW}.

$$R_T(k\Omega) = 42904 \times f_{SW}(kHz)^{-1.088} \tag{4}$$

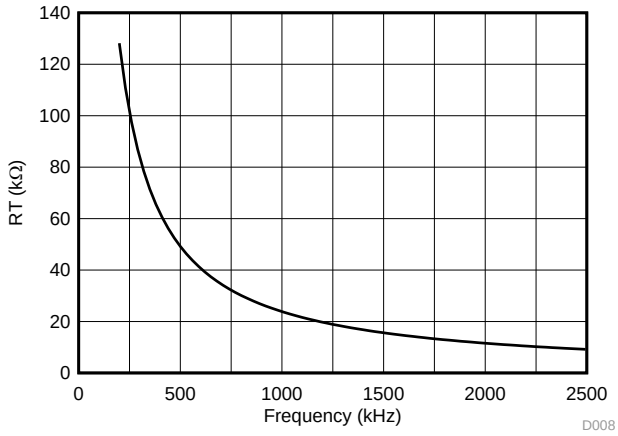

Figure 16. RT vs Frequency Curve

Table 1. Typical Frequency Setting RT Resistance

f_{SW} (kHz)	R_T (kΩ)
200	133
350	73.2
500	49.9

Copyright © 2015–2016, Texas Instruments Incorporated

Feature Description (continued)

Table 1. Typical Frequency Setting RT Resistance (continued)

f_{SW} (kHz)	R_T (kΩ)
750	32.4
1000	23.2
1500	15.0
1912	11.5
2200	9.76

The LMR16020 switching action can also be synchronized to an external clock from 250 kHz to 2.3 MHz. Connect a square wave to the RT/SYNC pin through either circuit network shown in Figure 17. Internal oscillator is synchronized by the falling edge of external clock. The recommendations for the external clock include: high level no lower than 1.7 V, low level no higher than 0.5 V and have a pulse width greater than 30 ns. When using a low impedance signal source, the frequency setting resistor R_T is connected in parallel with an AC coupling capacitor C_{COUP} to a termination resistor R_{TERM} (e.g., 50 Ω). The two resistors in series provide the default frequency setting resistance when the signal source is turned off. A 10 pF ceramic capacitor can be used for C_{COUP}. Figure 18, Figure 19 and Figure 20 show the device synchronized to an external system clock.

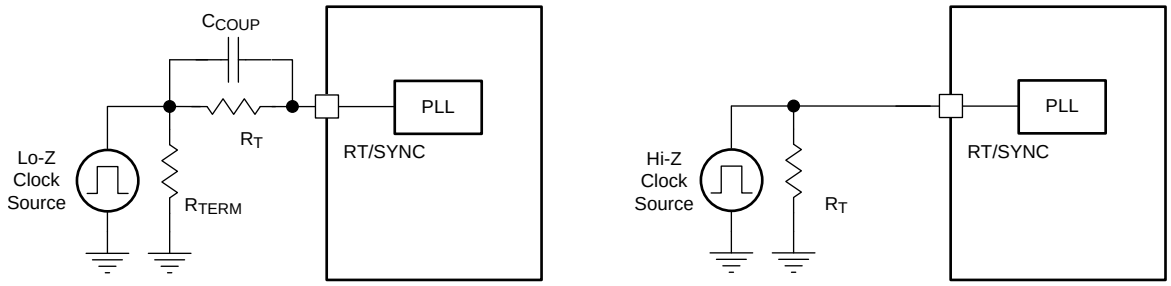

Figure 17. Synchronizing to an External Clock

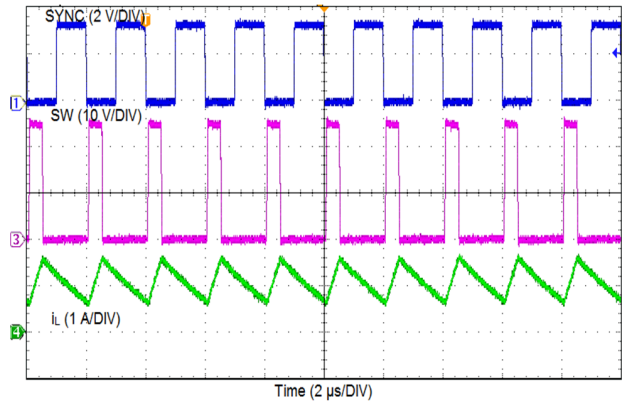

Figure 18. Synchronizing in CCM

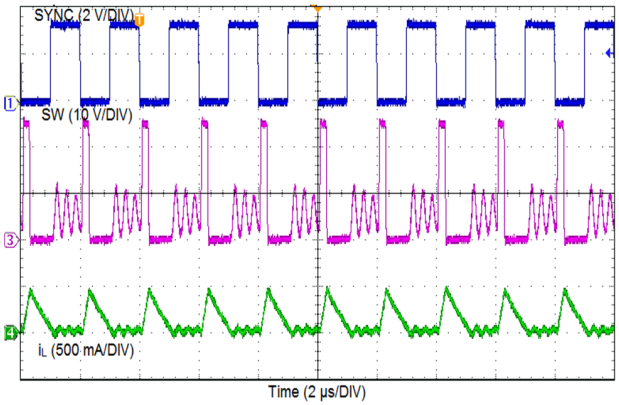

Figure 19. Synchronizing in DCM

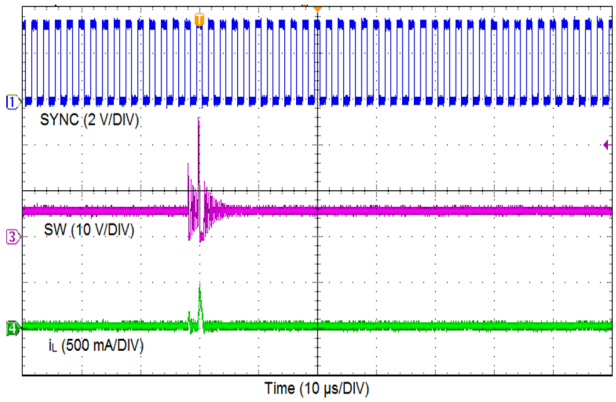

Figure 20. Synchronizing in Sleep-mode Mode

Equation 5 calculates the maximum switching frequency limitation set by the minimum controllable on time and the input to output step down ratio. Setting the switching frequency above this value will cause the regulator to skip switching pulses to achieve the low duty cycle required at maximum input voltage.

$$f_{SW(max)} = \frac{1}{t_{ON}} \times \left(\frac{I_{OUT} \times R_{IND} + V_{OUT} + V_D}{V_{IN_MAX} - I_{OUT} \times R_{DS_ON} + V_D} \right) \tag{5}$$

where

- I_{OUT} = Output current
- R_{IND} = Inductor series resistance
- V_{IN_MAX} = Maximum input voltage
- V_{OUT} = Output voltage
- V_D = Diode voltage drop
- R_{DS_ON} = High-side MOSFET switch on resistance
- t_{ON} = Minimum on time

7.3.8 Power Good (PGOOD)

The LMR16020 has a built in power-good flag shown on PGOOD pin to indicate whether the output voltage is within its regulation level. The PGOOD signal can be used for start-up sequencing of multiple rails or fault protection. The PGOOD pin is an open-drain output that requires a pull-up resistor to an appropriate DC voltage. Voltage seen by the PGOOD pin should never exceed 7 V. A resistor divider pair can be used to divide the voltage down from a higher potential. A typical range of pull-up resistor value is 10 kΩ to 100 kΩ.

Refer to Figure 21. When the FB voltage is within the power-good band, +7% above and -6% below the internal reference V_{REF} typically, the PGOOD switch will be turned off and the PGOOD voltage will be pulled up to the voltage level defined by the pull-up resistor or divider. When the FB voltage is outside of the tolerance band, +9% above or -8% below V_{REF} typically, the PGOOD switch will be turned on and the PGOOD pin voltage will be pulled low to indicate power bad.

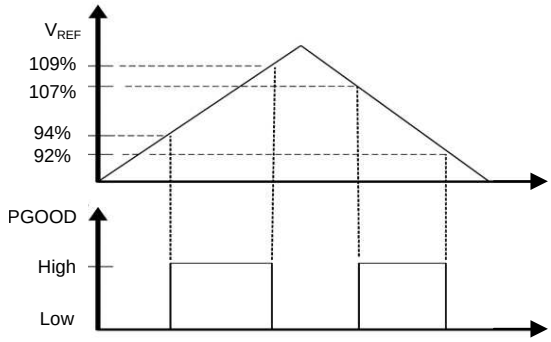

Figure 21. Power-Good Flag

Copyright © 2015–2016, Texas Instruments Incorporated

7.3.9 Over Current and Short Circuit Protection

The LMR16020 is protected from over current condition by cycle-by-cycle current limiting on the peak current of the high-side MOSFET. High-side MOSFET over-current protection is implemented by the nature of the Peak Current Mode control. The high-side switch current is compared to the output of the Error Amplifier (EA) minus slope compensation every switching cycle. Please refer to Functional Block Diagram for more details. The peak current of high-side switch is limited by a clamped maximum peak current threshold which is constant. So the peak current limit of the high-side switch is not affected by the slope compensation and remains constant over the full duty cycle range.

The LMR16020 also implements a frequency fold-back to protect the converter in severe over-current or short conditions. The oscillator frequency is divided by 2, 4, and 8 as the FB pin voltage decrease to 75%, 50%, 25% of V_{REF}. The frequency fold-back increases the off time by increasing the period of the switching cycle, so that it provides more time for the inductor current to ramp down and leads to a lower average inductor current. Lower frequency also means lower switching loss. Frequency fold-back reduces power dissipation and prevents overheating and potential damage to the device.

7.3.10 Overvoltage Protection

The LMR16020 employs an output overvoltage protection (OVP) circuit to minimize voltage overshoot when recovering from output fault conditions or strong unload transients in designs with low output capacitance. The OVP feature minimizes output overshoot by turning off high-side switch immediately when FB voltage reaches to the rising OVP threshold which is nominally 109% of the internal voltage reference V_{REF}. When the FB voltage drops below the falling OVP threshold which is nominally 107% of V_{REF}, the high-side MOSFET resumes normal operation.

7.3.11 Thermal Shutdown

The LMR16020 provides an internal thermal shutdown to protect the device when the junction temperature exceeds 170 °C (typical). The high-side MOSFET stops switching when thermal shundown activates. Once the die temperature falls below 158 °C (typical), the device reinitiates the power up sequence controlled by the internal soft-start circuitry.

7.4 Device Functional Modes

7.4.1 Shutdown Mode

The EN pin provides electrical ON and OFF control for the LMR16020. When V_{EN} is below 1.0 V, the device is in shutdown mode. The switching regulator is turned off and the quiescent current drops to 1.0 µA typically. The LMR16020 also employs under voltage lock out protection. If V_{IN} voltage is below the UVLO level, the regulator will be turned off.

7.4.2 Active Mode

The LMR16020 is in Active Mode when V_{EN} is above the precision enable threshold and V_{IN} is above its UVLO level. The simplest way to enable the LMR16020 is to connect the EN pin to VIN pin. This allows self startup when the input voltage is in the operation range: 4.3 V to 60 V. Please refer to *Enable and Adjustable Under-voltage Lockout* for details on setting these operating levels.

In Active Mode, depending on the load current, the LMR16020 will be in one of three modes:

1. Continuous conduction mode (CCM) with fixed switching frequency when load current is above half of the peak-to-peak inductor current ripple.
2. Discontinuous conduction mode (DCM) with fixed switching frequency when load current is lower than half of the peak-to-peak inductor current ripple in CCM operation.
3. Sleep-mode when internal COMP voltage drop to 400 mV at very light load.

7.4.3 CCM Mode

CCM operation is employed in the LMR16020 when the load current is higher than half of the peak-to-peak inductor current. In CCM operation, the frequency of operation is fixed, output voltage ripple will be at a minimum in this mode and the maximum output current of 2 A can be supplied by the LMR16020.

7.4.4 Light Load Operation

When the load current is lower than half of the peak-to-peak inductor current in CCM, the LMR16020 will operate in DCM. At even lighter current loads, Sleep-mode is activated to maintain high efficiency operation by reducing switching and gate drive losses.

Copyright © 2015–2016, Texas Instruments Incorporated

8 Application and Implementation

NOTE

Information in the following applications sections is not part of the TI component specification, and TI does not warrant its accuracy or completeness. TI's customers are responsible for determining suitability of components for their purposes. Customers should validate and test their design implementation to confirm system functionality.

8.1 Application Information

The LMR16020 is a step down DC-to-DC regulator. It is typically used to convert a higher DC voltage to a lower DC voltage with a maximum output current of 2 A. The following design procedure can be used to select components for the LMR16020. This section presents a simplified discussion of the design process.

8.2 Typical Application

The LMR16020 only requires a few external components to convert from wide voltage range supply to a fixed output voltage. A schematic of 5 V / 2 A application circuit is shown in Figure 22. The external components have to fulfill the needs of the application, but also the stability criteria of the device's control loop.

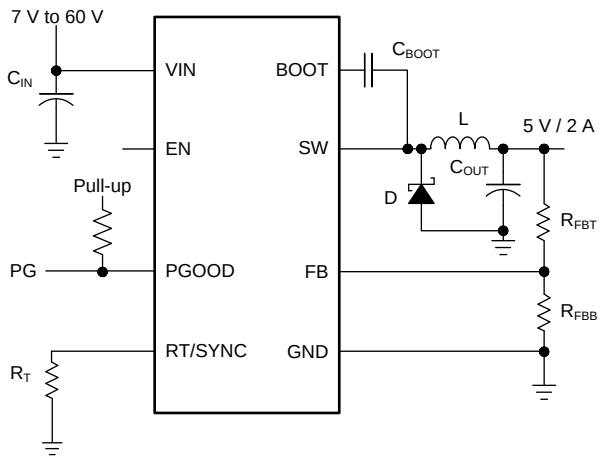

Figure 22. Application Circuit, 5V Output

8.2.1 Design Requirements

This example details the design of a high frequency switching regulator using ceramic output capacitors. A few parameters must be known in order to start the design process. These parameters are typically determined at the system level:

Table 2. Design Parameters

Input Voltage, V_{IN}	7 V to 60 V, Typical 24 V
Output Voltage, V_{OUT}	5.0 V
Maximum Output Current I_{O_MAX}	2 A
Transient Response 0.2 A to 2 A	5%
Output Voltage Ripple	50 mV
Input Voltage Ripple	400 mV
Switching Frequency f_{SW}	600 KHz

8.2.2 Detailed Design Procedure

8.2.2.1 Output Voltage Set-Point

The output voltage of LMR16020 is externally adjustable using a resistor divider network. The divider network is comprised of top feedback resistor R_{FBT} and bottom feedback resistor R_{FBB}. Equation 6 is used to determine the output voltage:

$$R_{FBT} = \frac{V_{OUT} - 0.75}{0.75} \times R_{FBB} \tag{6}$$

Choose the value of R_{FBT} to be 100 kΩ. With the desired output voltage set to 5 V and the V_{FB} = 0.75 V, the R_{FBB} value can then be calculated using Equation 6. The formula yields to a value 17.65 kΩ. Choose the closest available value of 17.8 kΩ for R_{FBB}.

8.2.2.2 Switching Frequency

For desired frequency, use Equation 7 to calculate the required value for R_T.

$$R_T(k\Omega) = 42904 \times f_{SW}(kHz)^{-1.088} \tag{7}$$

For 600 KHz, the calculated R_T is 40.72 kΩ and standard value 41.2 kΩ can be used to set the switching frequency at 600 KHz.

8.2.2.3 Output Inductor Selection

The most critical parameters for the inductor are the inductance, saturation current and the RMS current. The inductance is based on the desired peak-to-peak ripple current Δi_L. Since the ripple current increases with the input voltage, the maximum input voltage is always used to calculate the minimum inductance L_{MIN}. Use Equation 8 to calculate the minimum value of the output inductor. K_{IND} is a coefficient that represents the amount of inductor ripple current relative to the maximum output current. A reasonable value of K_{IND} should be 20%-40%. During an instantaneous short or over current operation event, the RMS and peak inductor current can be high. The inductor current rating should be higher than current limit.

$$\Delta i_L = \frac{V_{OUT} \times (V_{IN_MAX} - V_{OUT})}{V_{IN_MAX} \times L \times f_{SW}} \tag{8}$$

$$L_{MIN} = \frac{V_{IN_MAX} - V_{OUT}}{I_{OUT} \times K_{IND}} \times \frac{V_{OUT}}{V_{IN_MAX} \times f_{SW}} \tag{9}$$

In general, it is preferable to choose lower inductance in switching power supplies, because it usually corresponds to faster transient response, smaller DCR, and reduced size for more compact designs. But too low of an inductance can generate too large of an inductor current ripple such that over current protection at the full load could be falsely triggered. It also generates more conduction loss since the RMS current is slightly higher. Larger inductor current ripple also implies larger output voltage ripple with same output capacitors. With peak current mode control, it is not recommended to have too small of an inductor current ripple. A larger peak current ripple improves the comparator signal to noise ratio.

For this design example, choose K_{IND} = 0.4, the minimum inductor value is calculated to be 9.55 µH, and a nearest standard value is chosen: 10 µH. A standard 10 µH ferrite inductor with a capability of 2 A RMS current and 4 A saturation current can be used.

8.2.2.4 Output Capacitor Selection

The output capacitor(s), C_{OUT}, should be chosen with care since it directly affects the steady state output voltage ripple, loop stability and the voltage over/undershoot during load current transients.

The output ripple is essentially composed of two parts. One is caused by the inductor current ripple going through the Equivalent Series Resistance (ESR) of the output capacitors:

$$\Delta V_{OUT_ESR} = \Delta i_L \times ESR = K_{IND} \times I_{OUT} \times ESR \tag{10}$$

The other is caused by the inductor current ripple charging and discharging the output capacitors:

$$\Delta V_{OUT_C} = \frac{\Delta i_L}{8 \times f_{SW} \times C_{OUT}} = \frac{K_{IND} \times I_{OUT}}{8 \times f_{SW} \times C_{OUT}} \tag{11}$$

Copyright © 2015–2016, Texas Instruments Incorporated

The two components in the voltage ripple are not in phase, so the actual peak-to-peak ripple is smaller than the sum of two peaks.

Output capacitance is usually limited by transient performance specifications if the system requires tight voltage regulation with presence of large current steps and fast slew rate. When a fast large load increase happens, output capacitors provide the required charge before the inductor current can slew up to the appropriate level. The regulator's control loop usually needs three or more clock cycles to respond to the output voltage droop. The output capacitance must be large enough to supply the current difference for three clock cycles to maintain the output voltage within the specified range. Equation 12 shows the minimum output capacitance needed for specified output undershoot. When a sudden large load decrease happens, the output capacitors absorb energy stored in the inductor. The catch diode can't sink current so the energy stored in the inductor results in an output voltage overshoot. Equation 13 calculates the minimum capacitance required to keep the voltage overshoot within a specified range.

$$C_{OUT} > \frac{3 \times (I_{OH} - I_{OL})}{f_{SW} \times V_{US}} \tag{12}$$

$$C_{OUT} > \frac{I_{OH}^2 - I_{OL}^2}{(V_{OUT} + V_{OS})^2 - V_{OUT}^2} \times L \tag{13}$$

where

- K_{IND} = Ripple ratio of the inductor ripple current (Δi_L / I_{OUT})
- I_{OL} = Low level output current during load transient
- I_{OH} = High level output current during load transient
- V_{US} = Target output voltage undershoot
- V_{OS} = Target output voltage overshoot

For this design example, the target output ripple is 50 mV. Presuppose $\Delta V_{OUT_ESR} = \Delta V_{OUT_C}$ = 50 mV, and chose K_{IND} = 0.4. Equation 10 yields ESR no larger than 62.5 mΩ and Equation 11 yields C_{OUT} no smaller than 3.3 µF. For the target over/undershoot range of this design, $V_{US} = V_{OS}$ = 5% × V_{OUT} = 250 mV. The C_{OUT} can be calculated to be no smaller than 36 µF and 7.7 µF by Equation 12 and Equation 13 respectively. In summary, the most stringent criteria for the output capacitor is 47 µF. For this design example, two 33 µF, 16 V, X7R ceramic capacitors with 5 mΩ ESR are used in parallel.

8.2.2.5 Schottky Diode Selection

The breakdown voltage rating of the diode is preferred to be 25% higher than the maximum input voltage. The current rating for the diode should be equal to the maximum output current for best reliability in most applications. In cases where the input voltage is much greater than the output voltage the average diode current is lower. In this case it is possible to use a diode with a lower average current rating, approximately (1-D) × I_{OUT} however the peak current rating should be higher than the maximum load current. A 2 A rated diode is a good starting point.

8.2.2.6 Input Capacitor Selection

The LMR16020 device requires high frequency input decoupling capacitor(s) and a bulk input capacitor, depending on the application. The typical recommended value for the high frequency decoupling capacitor is 4.7 µF to 10 µF. A high-quality ceramic capacitor type X5R or X7R with sufficiency voltage rating is recommended. To compensate the derating of ceramic capacitors, a voltage rating of twice the maximum input voltage is recommended. Additionally, some bulk capacitance can be required, especially if the LMR16020 circuit is not located within approximately 5 cm from the input voltage source. This capacitor is used to provide damping to the voltage spike due to the lead inductance of the cable or the trace. For this design, two 2.2 µF, X7R ceramic capacitors rated for 100 V are used. A 0.1 µF for high-frequency filtering and place it as close as possible to the device pins.

8.2.2.7 Bootstrap Capacitor Selection

Every LMR16020 design requires a bootstrap capacitor (C_{BOOT}). The recommended capacitor is 0.1 µF and rated 16 V or higher. The bootstrap capacitor is located between the SW pin and the BOOT pin. The bootstrap capacitor must be a high-quality ceramic type with an X7R or X5R grade dielectric for temperature stability.

Copyright © 2015–2016, Texas Instruments Incorporated

8.2.3 Application Curves

Unless otherwise specified the following conditions apply: V_{IN} = 24 V, f_{SW} = 600 KHz, L = 10 µH, C_{OUT} = 2 × 47 µF, T_A = 25 °C.

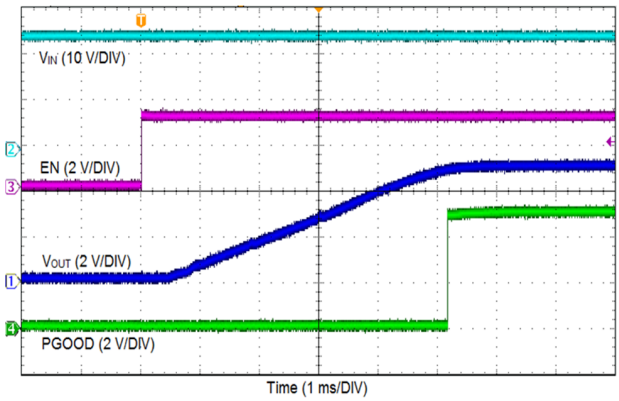

V_{IN} = 24 V V_{OUT} = 5 V I_{OUT} = 1 A

Figure 23. Start-up By EN

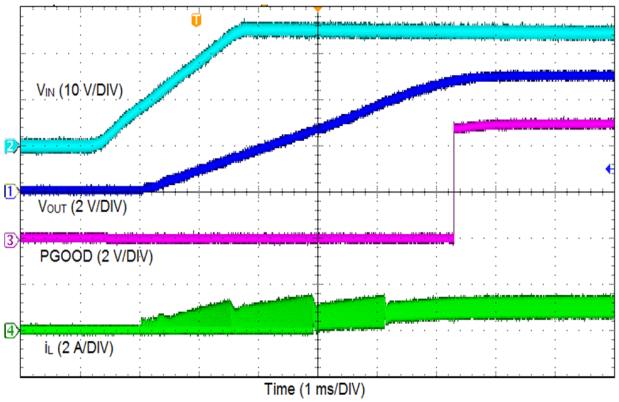

V_{IN} = 24 V V_{OUT} = 5 V I_{OUT} = 1 A

Figure 24. Start-up By V_{IN}

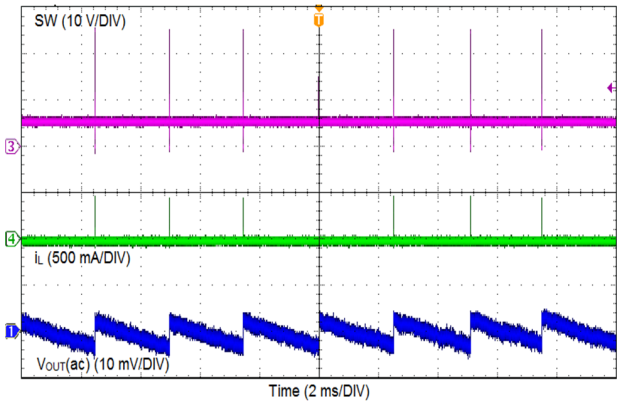

V_{IN} = 24 V V_{OUT} = 5 V I_{OUT} = 0 A

Figure 25. Sleep-mode

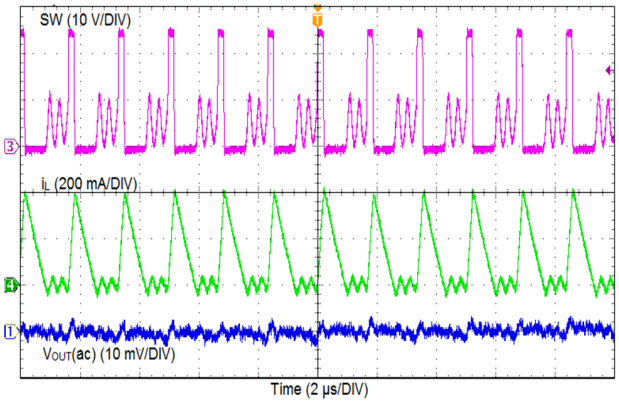

V_{IN} = 12 V V_{OUT} = 5 V I_{OUT} = 100 mA

Figure 26. DCM Mode

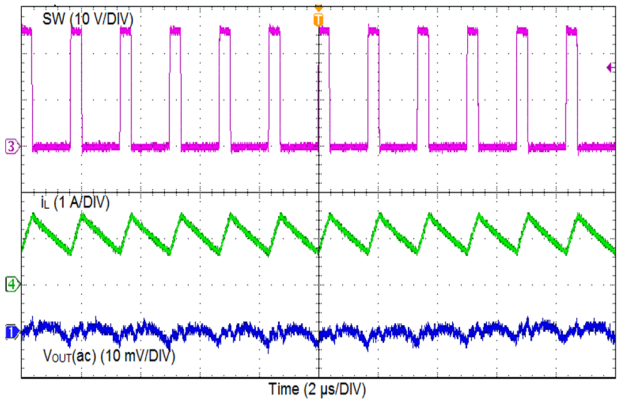

V_{IN} = 24 V V_{OUT} = 5 V I_{OUT} = 1 A

Figure 27. CCM Mode

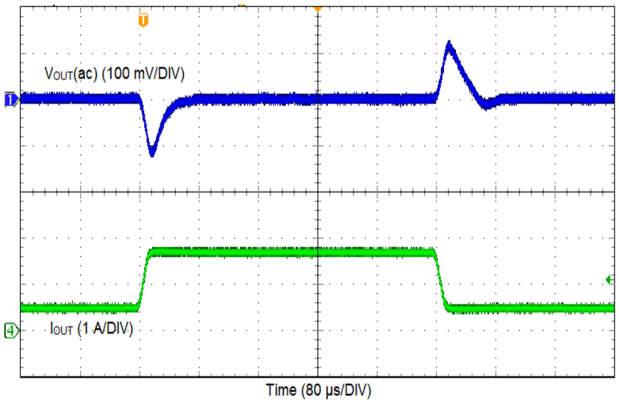

I_{OUT}: 20% → 80% of 2 A Slew rate = 100 mA/µs

Figure 28. Load Transient

Copyright © 2015–2016, Texas Instruments Incorporated

Unless otherwise specified the following conditions apply: V_{IN} = 24 V, f_{SW} = 600 KHz, L = 10 µH, C_{OUT} = 2 × 47 µF, T_A = 25 °C.

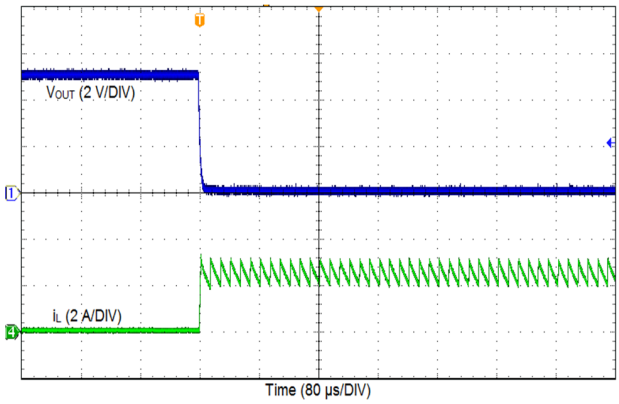

V_{IN} = 24 V V_{OUT} = 5 V

Figure 29. Output Short

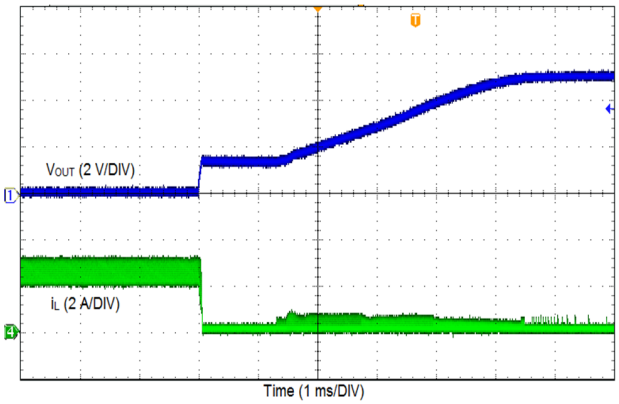

V_{IN} = 24 V V_{OUT} = 5 V

Figure 30. Output Short Recovery

9 Power Supply Recommendations

The LMR16020 is designed to operate from an input voltage supply range between 4.3 V and 60 V. This input supply should be able to withstand the maximum input current and maintain a stable voltage. The resistance of the input supply rail should be low enough that an input current transient does not cause a high enough drop at the LMR16020 supply voltage that can cause a false UVLO fault triggering and system reset. If the input supply is located more than a few inches from the LMR16020, additional bulk capacitance may be required in addition to the ceramic input capacitors. The amount of bulk capacitance is not critical, but a 47 µF or 68 µF electrolytic capacitor is a typical choice .

10 Layout

10.1 Layout Guidelines

Layout is a critical portion of good power supply design. The following guidelines will help users design a PCB with the best power conversion performance, thermal performance, and minimized generation of unwanted EMI.

1. The feedback network, resistor R_{FBT} and R_{FBB}, should be kept close to the FB pin. V_{OUT} sense path away from noisy nodes and preferably through a layer on the other side of a shielding layer.
2. The input bypass capacitor C_{IN} must be placed as close as possible to the VIN pin and ground. Grounding for both the input and output capacitors should consist of localized top side planes that connect to the GND pin and PAD.
3. The inductor L should be placed close to the SW pin to reduce magnetic and electrostatic noise.
4. The output capacitor, C_{OUT} should be placed close to the junction of L and the diode D. The L, D, and C_{OUT} trace should be as short as possible to reduce conducted and radiated noise and increase overall efficiency.
5. The ground connection for the diode, C_{IN}, and C_{OUT} should be as small as possible and tied to the system ground plane in only one spot (preferably at the C_{OUT} ground point) to minimize conducted noise in the system ground plane.
6. For more detail on switching power supply layout considerations see SNVA021 Application Note AN-1149.

Copyright © 2015–2016, Texas Instruments Incorporated

10.2 Layout Example

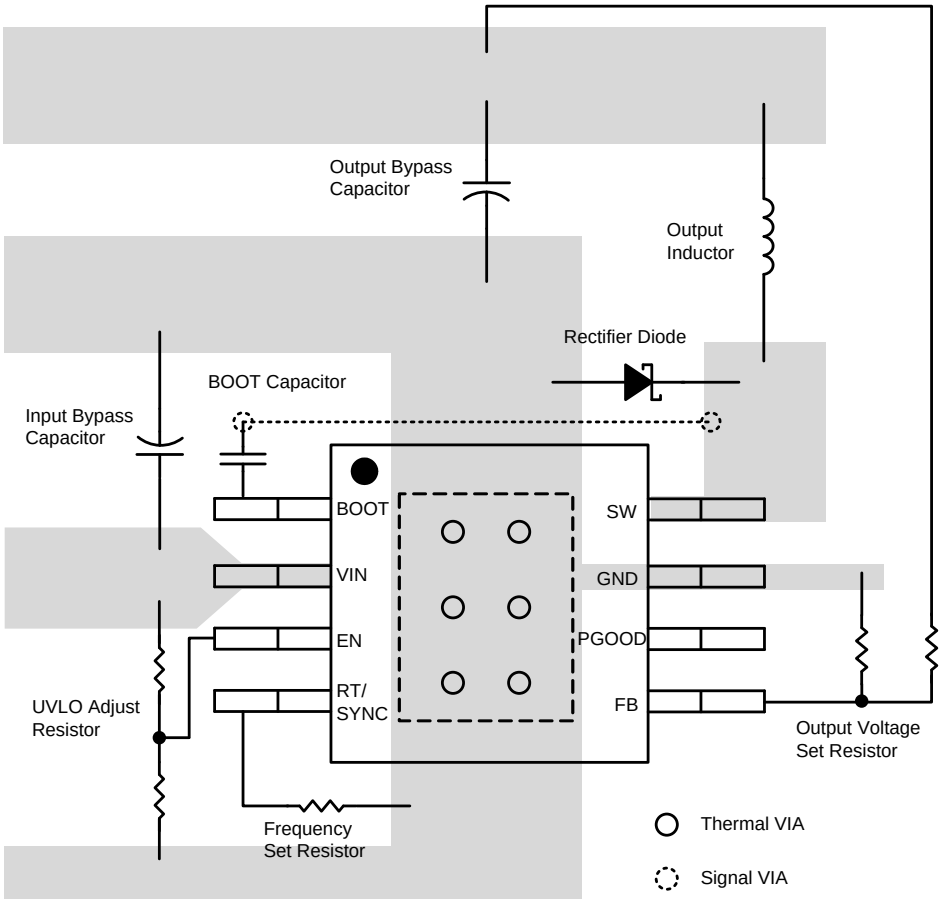

Figure 31. Layout

11 Device and Documentation Support

11.1 Device Support

11.1.1 Third-Party Products Disclaimer

TI'S PUBLICATION OF INFORMATION REGARDING THIRD-PARTY PRODUCTS OR SERVICES DOES NOT CONSTITUTE AN ENDORSEMENT REGARDING THE SUITABILITY OF SUCH PRODUCTS OR SERVICES OR A WARRANTY, REPRESENTATION OR ENDORSEMENT OF SUCH PRODUCTS OR SERVICES, EITHER ALONE OR IN COMBINATION WITH ANY TI PRODUCT OR SERVICE.

11.2 Community Resources

The following links connect to TI community resources. Linked contents are provided "AS IS" by the respective contributors. They do not constitute TI specifications and do not necessarily reflect TI's views; see TI's Terms of Use.

TI E2E™ Online Community ***TI's Engineer-to-Engineer (E2E) Community.*** Created to foster collaboration among engineers. At e2e.ti.com, you can ask questions, share knowledge, explore ideas and help solve problems with fellow engineers.

Design Support ***TI's Design Support*** Quickly find helpful E2E forums along with design support tools and contact information for technical support.

11.3 Trademarks

PowerPAD, E2E are trademarks of Texas Instruments.
SIMPLE SWITCHER is a registered trademark of Texas Instruments.
All other trademarks are the property of their respective owners.

11.4 Electrostatic Discharge Caution

These devices have limited built-in ESD protection. The leads should be shorted together or the device placed in conductive foam during storage or handling to prevent electrostatic damage to the MOS gates.

11.5 Glossary

SLYZ022 — *TI Glossary*.

This glossary lists and explains terms, acronyms, and definitions.

12 Mechanical, Packaging, and Orderable Information

The following pages include mechanical, packaging, and orderable information. This information is the most current data available for the designated devices. This data is subject to change without notice and revision of this document. For browser-based versions of this data sheet, refer to the left-hand navigation.

Copyright © 2015–2016, Texas Instruments Incorporated

MECHANICAL DATA

DDA (R–PDSO–G8) PowerPAD™ PLASTIC SMALL–OUTLINE

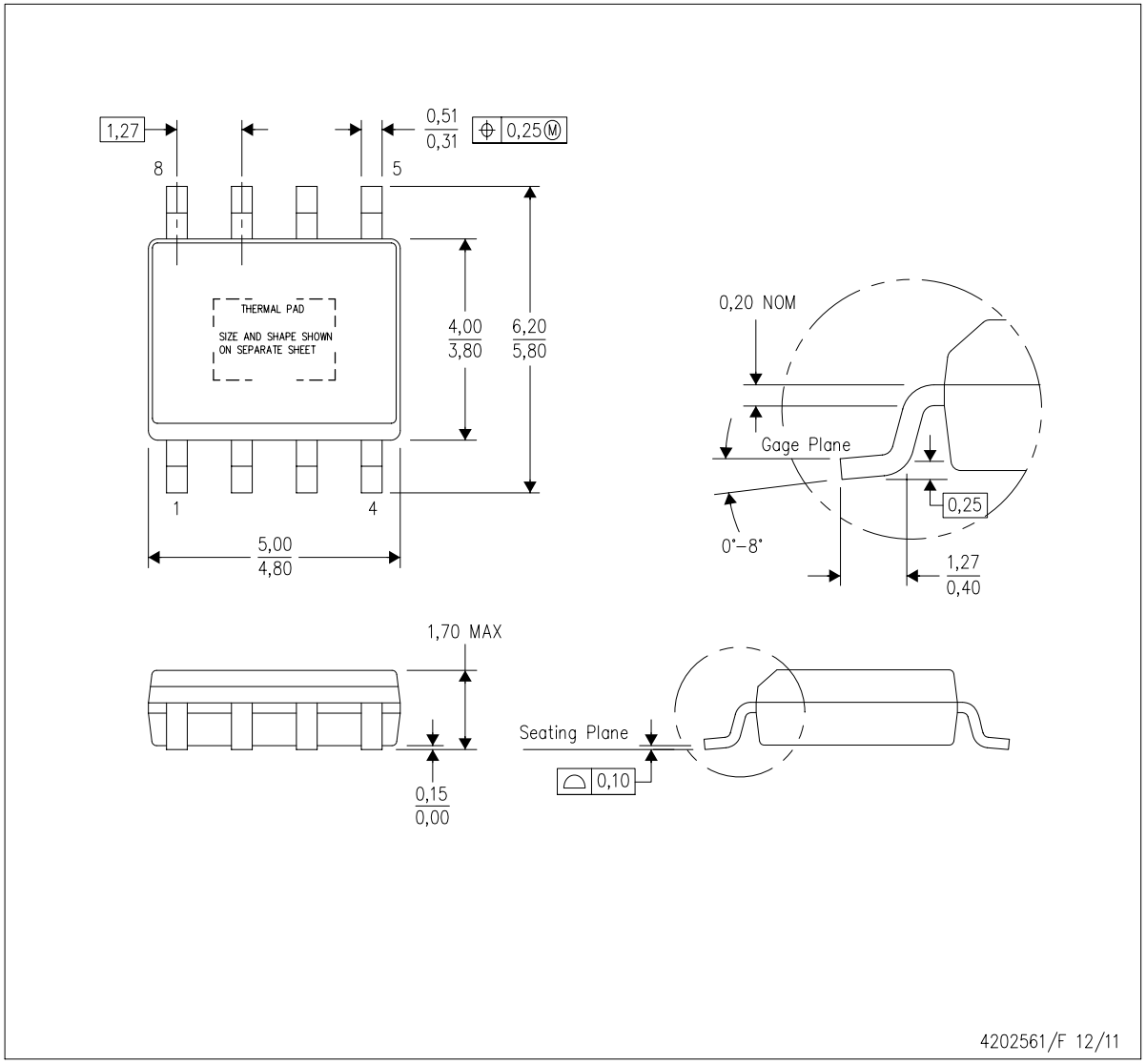

NOTES:
A. All linear dimensions are in millimeters. Dimensioning and tolerancing per ASME Y14.5–1994.
B. This drawing is subject to change without notice.
C. Body dimensions do not include mold flash or protrusion not to exceed 0,15.
D. This package is designed to be soldered to a thermal pad on the board. Refer to Technical Brief, PowerPad Thermally Enhanced Package, Texas Instruments Literature No. SLMA002 for information regarding recommended board layout. This document is available at www.ti.com <http://www.ti.com>.
E. See the additional figure in the Product Data Sheet for details regarding the exposed thermal pad features and dimensions.
F. This package complies to JEDEC MS–012 variation BA

PowerPAD is a trademark of Texas Instruments.

Copyright © 2015–2016, Texas Instruments Incorporated

PACKAGING INFORMATION

Orderable part number	Status (1)	Material type (2)	Package | Pins	Package qty | Carrier	RoHS (3)	Lead finish/ Ball material (4)	MSL rating/ Peak reflow (5)	Op temp (°C)	Part marking (6)
LMR16020PDDA	Active	Production	SO PowerPAD (DDA) | 8	75 | TUBE	Yes	NIPDAU | NIPDAUAG	Level-2-260C-1 YEAR	-40 to 125	SB2P
LMR16020PDDA.B	Active	Production	SO PowerPAD (DDA) | 8	75 | TUBE	Yes	NIPDAU	Level-2-260C-1 YEAR	-40 to 125	SB2P
LMR16020PDDAR	Active	Production	SO PowerPAD (DDA) | 8	2500 | LARGE T&R	Yes	NIPDAU | NIPDAUAG	Level-2-260C-1 YEAR	-40 to 125	SB2P
LMR16020PDDAR.B	Active	Production	SO PowerPAD (DDA) | 8	2500 | LARGE T&R	Yes	NIPDAU	Level-2-260C-1 YEAR	-40 to 125	SB2P
LMR16020PDDARG4	Active	Production	SO PowerPAD (DDA) | 8	2500 | LARGE T&R	Yes	NIPDAU	Level-2-260C-1 YEAR	-40 to 125	SB2P
LMR16020PDDARG4.B	Active	Production	SO PowerPAD (DDA) | 8	2500 | LARGE T&R	Yes	NIPDAU	Level-2-260C-1 YEAR	-40 to 125	SB2P

(1) **Status:** For more details on status, see our product life cycle.

(2) **Material type:** When designated, preproduction parts are prototypes/experimental devices, and are not yet approved or released for full production. Testing and final process, including without limitation quality assurance, reliability performance testing, and/or process qualification, may not yet be complete, and this item is subject to further changes or possible discontinuation. If available for ordering, purchases will be subject to an additional waiver at checkout, and are intended for early internal evaluation purposes only. These items are sold without warranties of any kind.

(3) **RoHS values:** Yes, No, RoHS Exempt. See the TI RoHS Statement for additional information and value definition.

(4) **Lead finish/Ball material:** Parts may have multiple material finish options. Finish options are separated by a vertical ruled line. Lead finish/Ball material values may wrap to two lines if the finish value exceeds the maximum column width.

(5) **MSL rating/Peak reflow:** The moisture sensitivity level ratings and peak solder (reflow) temperatures. In the event that a part has multiple moisture sensitivity ratings, only the lowest level per JEDEC standards is shown. Refer to the shipping label for the actual reflow temperature that will be used to mount the part to the printed circuit board.

(6) **Part marking:** There may be an additional marking, which relates to the logo, the lot trace code information, or the environmental category of the part.

Multiple part markings will be inside parentheses. Only one part marking contained in parentheses and separated by a "~" will appear on a part. If a line is indented then it is a continuation of the previous line and the two combined represent the entire part marking for that device.

Important Information and Disclaimer: The information provided on this page represents TI's knowledge and belief as of the date that it is provided. TI bases its knowledge and belief on information provided by third parties, and makes no representation or warranty as to the accuracy of such information. Efforts are underway to better integrate information from third parties. TI has taken and continues to take reasonable steps to provide representative and accurate information but may not have conducted destructive testing or chemical analysis on incoming materials and chemicals. TI and TI suppliers consider certain information to be proprietary, and thus CAS numbers and other limited information may not be available for release.

In no event shall TI's liability arising out of such information exceed the total purchase price of the TI part(s) at issue in this document sold by TI to Customer on an annual basis.

TUBE

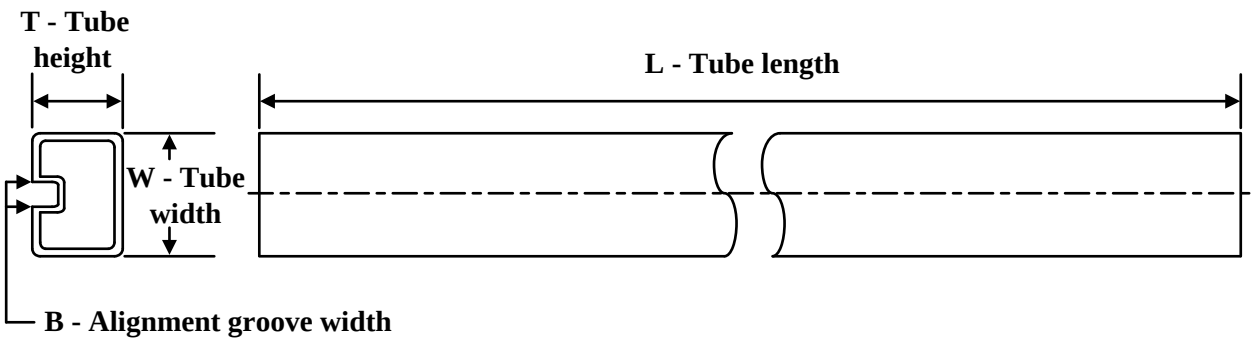

*All dimensions are nominal

Device	Package Name	Package Type	Pins	SPQ	L (mm)	W (mm)	T (µm)	B (mm)
LMR16020PDDA	DDA	HSOIC	8	75	517	7.87	635	4.25
LMR16020PDDA	DDA	HSOIC	8	75	507	8	3940	4.32
LMR16020PDDA.B	DDA	HSOIC	8	75	507	8	3940	4.32
LMR16020PDDA.B	DDA	HSOIC	8	75	517	7.87	635	4.25

DDA (R-PDSO-G8) PowerPAD™ PLASTIC SMALL-OUTLINE

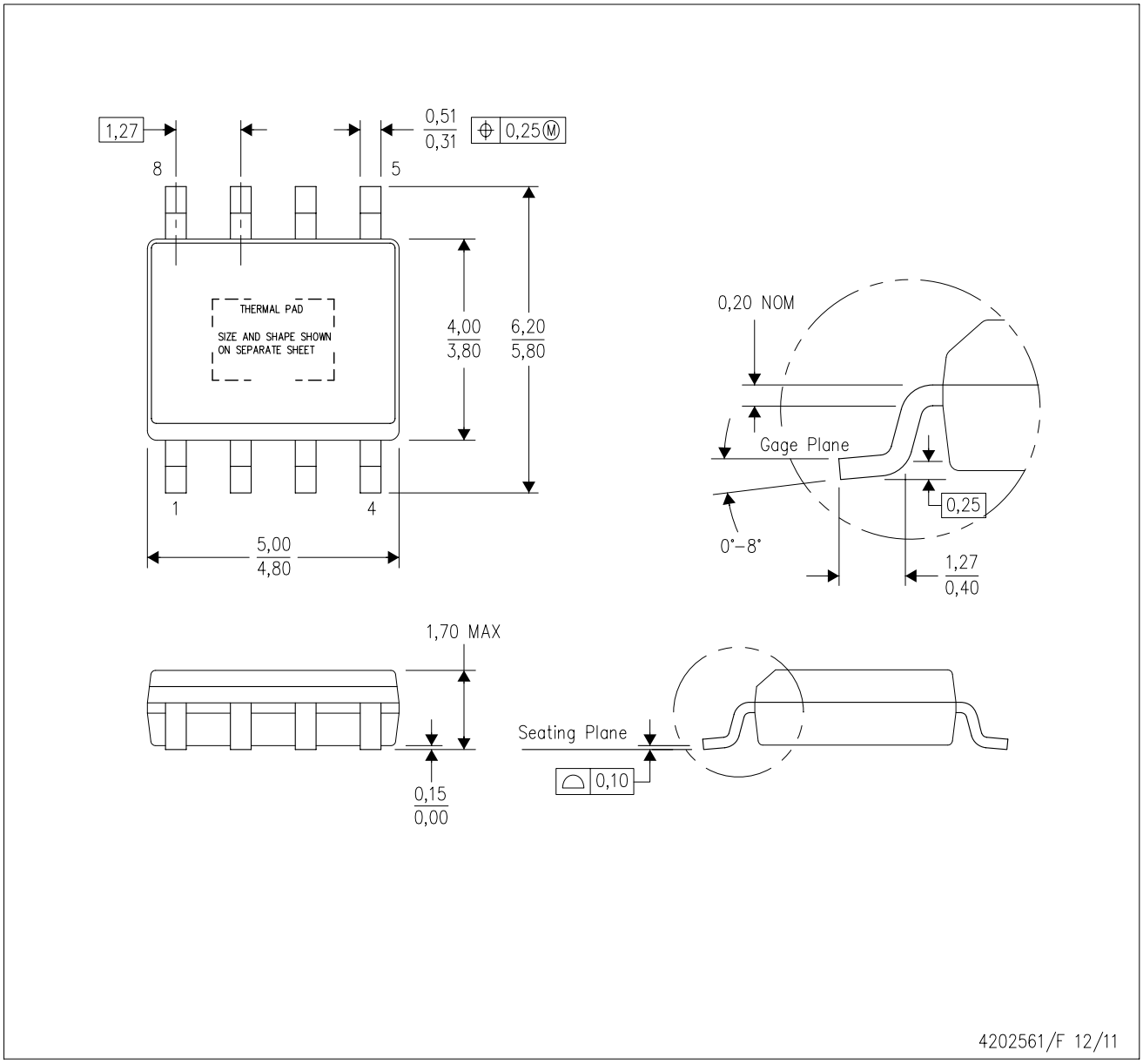

NOTES:
A. All linear dimensions are in millimeters. Dimensioning and tolerancing per ASME Y14.5–1994.
B. This drawing is subject to change without notice.
C. Body dimensions do not include mold flash or protrusion not to exceed 0,15.
D. This package is designed to be soldered to a thermal pad on the board. Refer to Technical Brief, PowerPad Thermally Enhanced Package, Texas Instruments Literature No. SLMA002 for information regarding recommended board layout. This document is available at www.ti.com <http://www.ti.com>.
E. See the additional figure in the Product Data Sheet for details regarding the exposed thermal pad features and dimensions.
F. This package complies to JEDEC MS-012 variation BA

PowerPAD is a trademark of Texas Instruments.

DDA (R-PDSO-G8) PowerPAD™ PLASTIC SMALL OUTLINE

THERMAL INFORMATION

This PowerPAD™ package incorporates an exposed thermal pad that is designed to be attached to a printed circuit board (PCB). The thermal pad must be soldered directly to the PCB. After soldering, the PCB can be used as a heatsink. In addition, through the use of thermal vias, the thermal pad can be attached directly to the appropriate copper plane shown in the electrical schematic for the device, or alternatively, can be attached to a special heatsink structure designed into the PCB. This design optimizes the heat transfer from the integrated circuit (IC).

For additional information on the PowerPAD package and how to take advantage of its heat dissipating abilities, refer to Technical Brief, PowerPAD Thermally Enhanced Package, Texas Instruments Literature No. SLMA002 and Application Brief, PowerPAD Made Easy, Texas Instruments Literature No. SLMA004. Both documents are available at www.ti.com.

The exposed thermal pad dimensions for this package are shown in the following illustration.

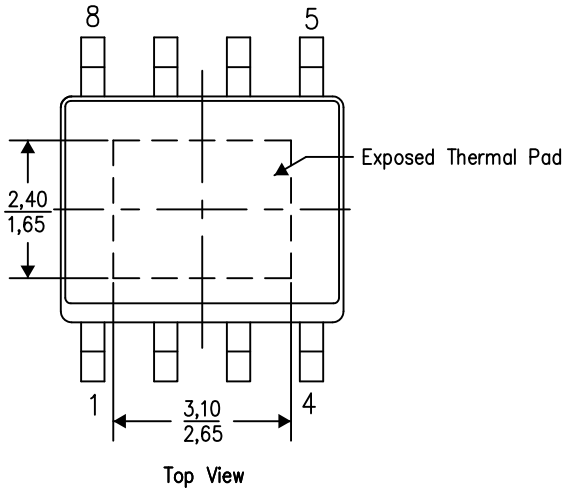

Exposed Thermal Pad Dimensions

4206322-6/L 05/12

NOTE: A. All linear dimensions are in millimeters

PowerPAD is a trademark of Texas Instruments

DDA (R–PDSO–G8) PowerPAD™ PLASTIC SMALL OUTLINE

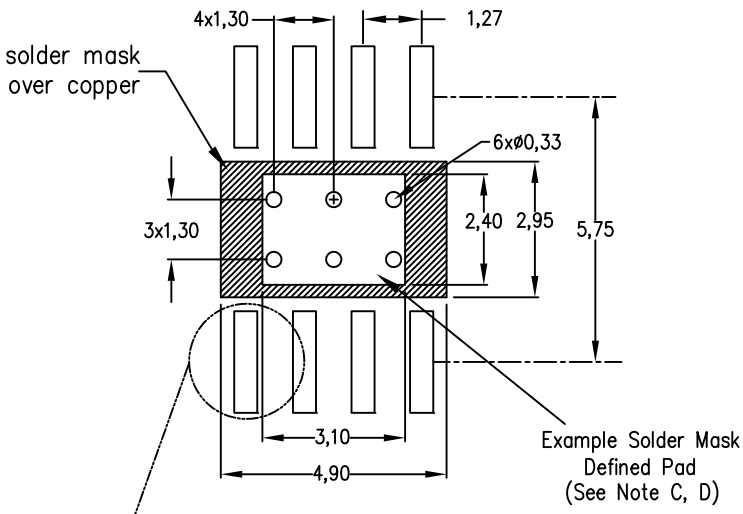

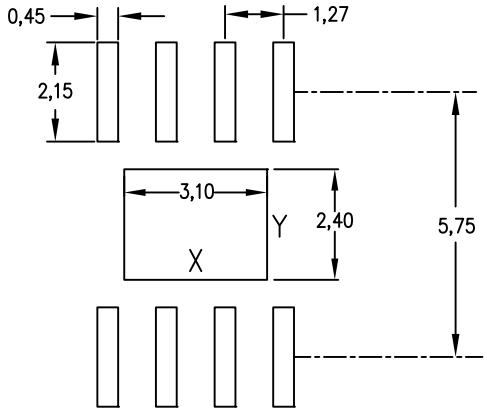

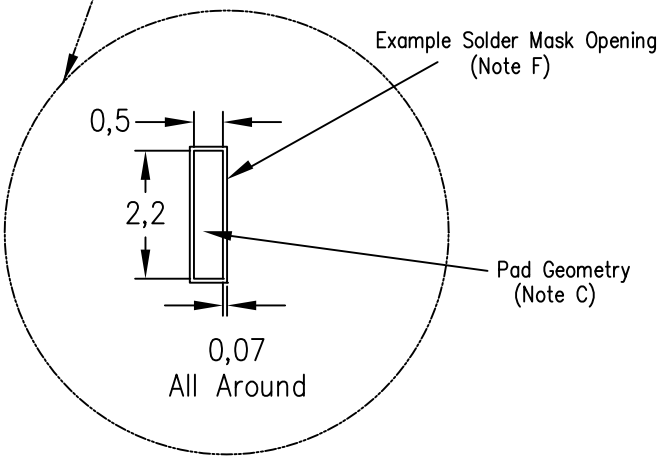

Center Power Pad Solder Stencil Opening		
Stencil Thickness	X	Y
0.1mm	3.3	2.6
0.127mm	3.1	2.4
0.152mm	2.9	2.2
0.178mm	2.8	2.1

4208951–6/D 04/12

NOTES:
A. All linear dimensions are in millimeters.
B. This drawing is subject to change without notice.
C. Publication IPC–7351 is recommended for alternate designs.
D. This package is designed to be soldered to a thermal pad on the board. Refer to Technical Brief, PowerPad Thermally Enhanced Package, Texas Instruments Literature No. SLMA002, SLMA004, and also the Product Data Sheets for specific thermal information, via requirements, and recommended board layout. These documents are available at www.ti.com <http://www.ti.com>. Publication IPC–7351 is recommended for alternate designs.
E. Laser cutting apertures with trapezoidal walls and also rounding corners will offer better paste release. Customers should contact their board assembly site for stencil design recommendations. Example stencil design based on a 50% volumetric metal load solder paste. Refer to IPC–7525 for other stencil recommendations.
F. Customers should contact their board fabrication site for solder mask tolerances between and around signal pads.

PowerPAD is a trademark of Texas Instruments.

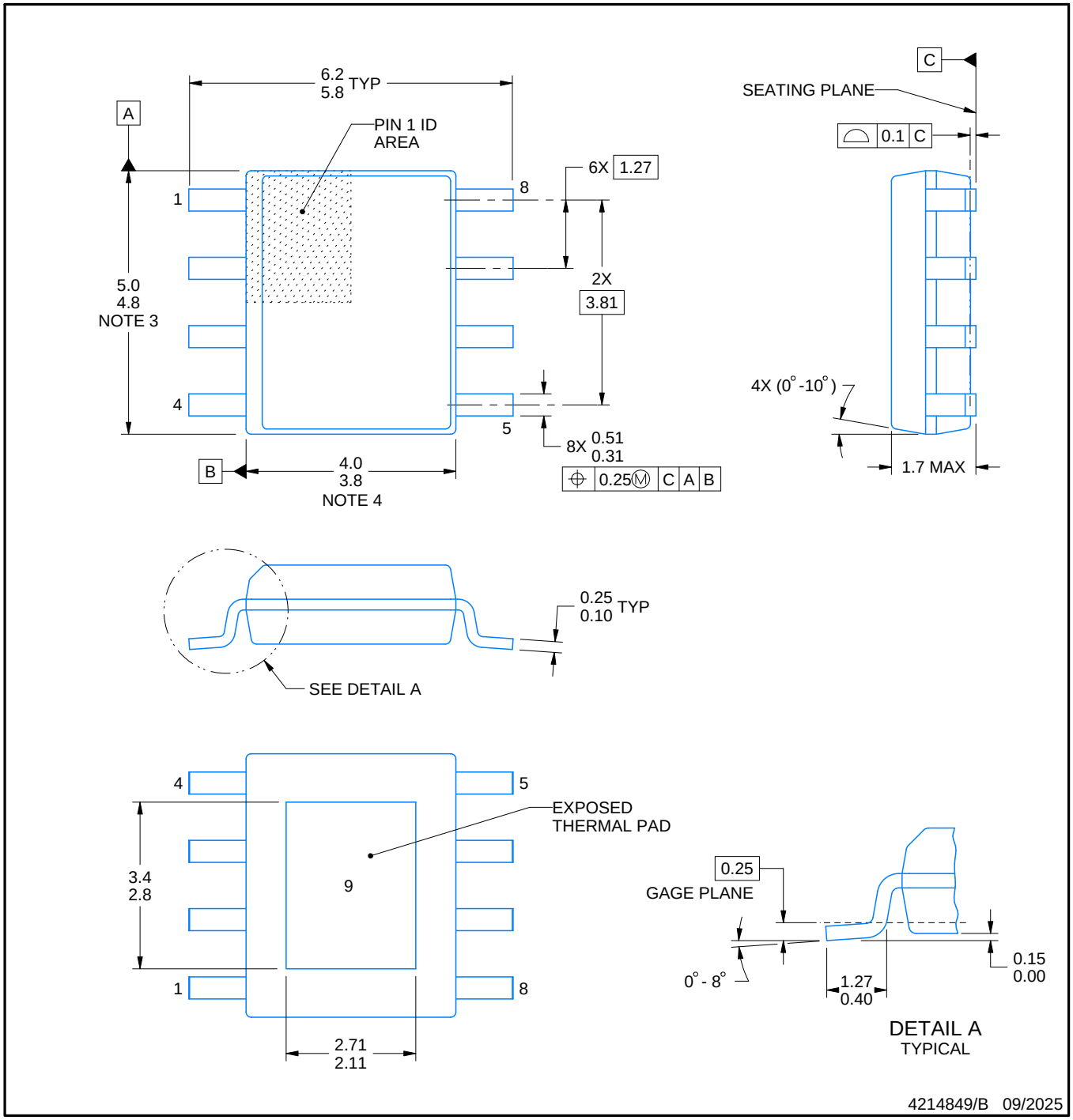

PowerPAD is a trademark of Texas Instruments.

NOTES:

1. All linear dimensions are in millimeters. Any dimensions in parenthesis are for reference only. Dimensioning and tolerancing per ASME Y14.5M.
2. This drawing is subject to change without notice.
3. This dimension does not include mold flash, protrusions, or gate burrs. Mold flash, protrusions, or gate burrs shall not exceed 0.15 mm per side.
4. This dimension does not include interlead flash. Interlead flash shall not exceed 0.25 mm per side.
5. Reference JEDEC registration MS-012.

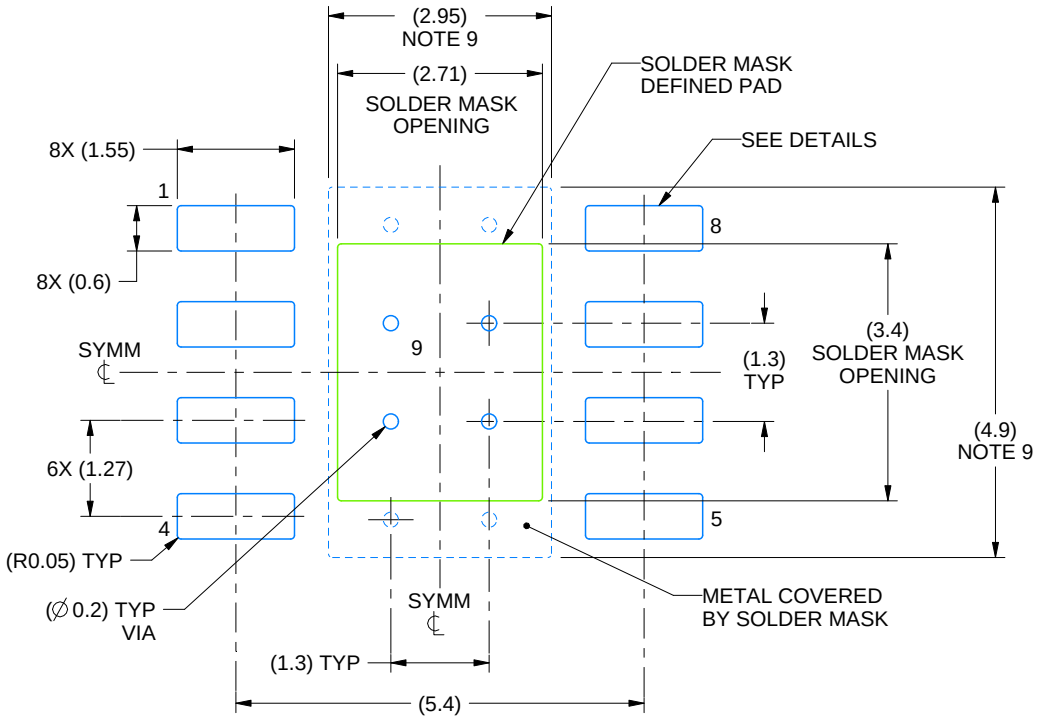

LAND PATTERN EXAMPLE
SCALE:10X

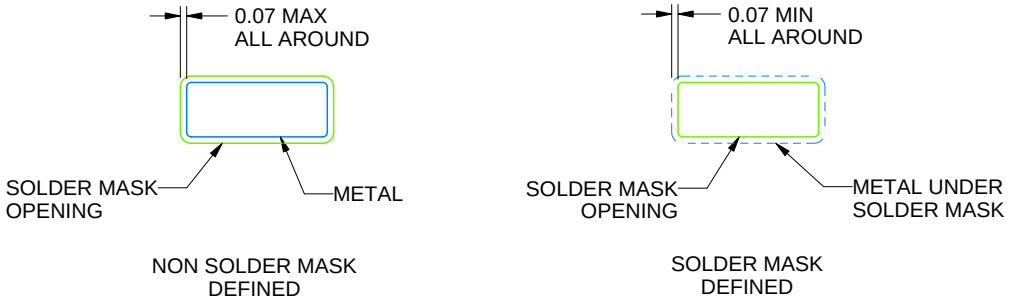

SOLDER MASK DETAILS
PADS 1-8

4214849/B 09/2025

NOTES: (continued)

6. Publication IPC-7351 may have alternate designs.
7. Solder mask tolerances between and around signal pads can vary based on board fabrication site.
8. This package is designed to be soldered to a thermal pad on the board. For more information, see Texas Instruments literature numbers SLMA002 (www.ti.com/lit/slma002) and SLMA004 (www.ti.com/lit/slma004).
9. Size of metal pad may vary due to creepage requirement.
10. Vias are optional depending on application, refer to device data sheet. If any vias are implemented, refer to their locations shown on this view. It is recommended that vias under paste be filled, plugged or tented.

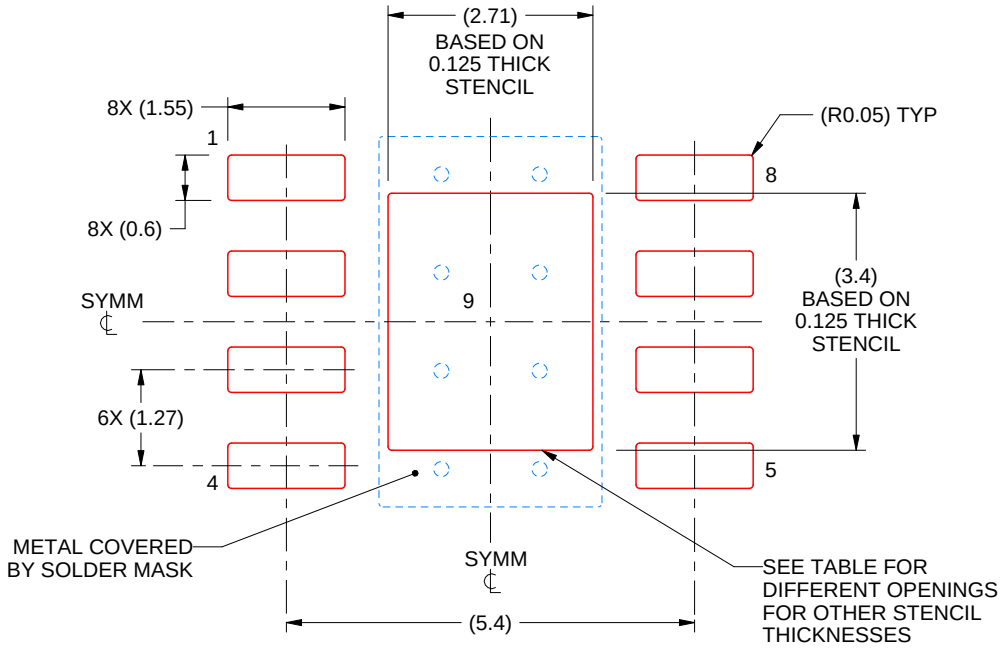

SOLDER PASTE EXAMPLE
EXPOSED PAD
100% PRINTED SOLDER COVERAGE BY AREA
SCALE:10X

STENCIL THICKNESS	SOLDER STENCIL OPENING
0.1	3.03 X 3.80
0.125	2.71 X 3.40 (SHOWN)
0.150	2.47 X 3.10
0.175	2.29 X 2.87

4214849/B 09/2025

NOTES: (continued)

11. Laser cutting apertures with trapezoidal walls and rounded corners may offer better paste release. IPC-7525 may have alternate design recommendations.
12. Board assembly site may have different recommendations for stencil design.

IMPORTANT NOTICE AND DISCLAIMER

TI PROVIDES TECHNICAL AND RELIABILITY DATA (INCLUDING DATASHEETS), DESIGN RESOURCES (INCLUDING REFERENCE DESIGNS), APPLICATION OR OTHER DESIGN ADVICE, WEB TOOLS, SAFETY INFORMATION, AND OTHER RESOURCES “AS IS” AND WITH ALL FAULTS, AND DISCLAIMS ALL WARRANTIES, EXPRESS AND IMPLIED, INCLUDING WITHOUT LIMITATION ANY IMPLIED WARRANTIES OF MERCHANTABILITY, FITNESS FOR A PARTICULAR PURPOSE OR NON-INFRINGEMENT OF THIRD PARTY INTELLECTUAL PROPERTY RIGHTS.

These resources are intended for skilled developers designing with TI products. You are solely responsible for (1) selecting the appropriate TI products for your application, (2) designing, validating and testing your application, and (3) ensuring your application meets applicable standards, and any other safety, security, regulatory or other requirements.

These resources are subject to change without notice. TI grants you permission to use these resources only for development of an application that uses the TI products described in the resource. Other reproduction and display of these resources is prohibited. No license is granted to any other TI intellectual property right or to any third party intellectual property right. TI disclaims responsibility for, and you fully indemnify TI and its representatives against any claims, damages, costs, losses, and liabilities arising out of your use of these resources.

TI’s products are provided subject to TI’s Terms of Sale, TI’s General Quality Guidelines, or other applicable terms available either on ti.com or provided in conjunction with such TI products. TI’s provision of these resources does not expand or otherwise alter TI’s applicable warranties or warranty disclaimers for TI products. Unless TI explicitly designates a product as custom or customer-specified, TI products are standard, catalog, general purpose devices.

TI objects to and rejects any additional or different terms you may propose.

Copyright © 2025, Texas Instruments Incorporated

Last updated 10/2025