MIXED SIGNAL MICROCONTROLLER

FEATURES

- Low Supply Voltage Range: 1.8 V to 3.6 V
- Ultra-Low Power Consumption
  - Active Mode: 270 µA at 1 MHz, 2.2 V
  - Standby Mode: 0.7 µA
  - Off Mode (RAM Retention): 0.1 µA
- Ultra-Fast Wake-Up From Standby Mode in Less Than 1 µs
- 16-Bit RISC Architecture, 62.5-ns Instruction Cycle Time
- Basic Clock Module Configurations
  - Internal Frequencies up to 16 MHz With Four Calibrated Frequencies to ±1%
  - Internal Very-Low-Power Low-Frequency Oscillator
  - 32-kHz Crystal
  - High-Frequency (HF) Crystal up to 16 MHz
  - Resonator
  - External Digital Clock Source
  - External Resistor
- 16-Bit Timer_A With Three Capture/Compare Registers
- 16-Bit Timer_B With Three Capture/Compare Registers
- Universal Serial Communication Interface
  - Enhanced UART Supporting Auto-Baudrate Detection (LIN)
  - IrDA Encoder and Decoder
  - Synchronous SPI
  - I2C™
- 10-Bit 200-ksps Analog-to-Digital (A/D) Converter With Internal Reference, Sample-and-Hold, Autoscan, and Data Transfer Controller
- Two Configurable Operational Amplifiers (MSP430F22x4 Only)
- Brownout Detector
- Serial Onboard Programming, No External Programming Voltage Needed, Programmable Code Protection by Security Fuse
- Bootstrap Loader
- On-Chip Emulation Module
- Family Members Include:
  - MSP430F2232
    - 8KB + 256B Flash Memory
    - 512B RAM
  - MSP430F2252
    - 16KB + 256B Flash Memory
    - 512B RAM
  - MSP430F2272
    - 32KB + 256B Flash Memory
    - 1KB RAM
  - MSP430F2234
    - 8KB + 256B Flash Memory
    - 512B RAM
  - MSP430F2254
    - 16KB + 256B Flash Memory
    - 512B RAM
  - MSP430F2274
    - 32KB + 256B Flash Memory
    - 1KB RAM
- Available in a 38-Pin Thin Shrink Small-Outline Package (TSSOP) (DA), 40-Pin QFN Package (RHA), and 49-Pin Ball Grid Array Package (YFF) (See Table 1)
- For Complete Module Descriptions, See the *MSP430x2xx Family User's Guide* (SLAU144)

Please be aware that an important notice concerning availability, standard warranty, and use in critical applications of Texas Instruments semiconductor products and disclaimers thereto appears at the end of this data sheet.

MSP430 is a trademark of Texas Instruments.
All other trademarks are the property of their respective owners.

PRODUCTION DATA information is current as of publication date. Products conform to specifications per the terms of the Texas Instruments standard warranty. Production processing does not necessarily include testing of all parameters.

Copyright © 2006–2012, Texas Instruments Incorporated

This integrated circuit can be damaged by ESD. Texas Instruments recommends that all integrated circuits be handled with appropriate precautions. Failure to observe proper handling and installation procedures can cause damage.

ESD damage can range from subtle performance degradation to complete device failure. Precision integrated circuits may be more susceptible to damage because very small parametric changes could cause the device not to meet its published specifications.

DESCRIPTION

The Texas Instruments MSP430™ family of ultra-low-power microcontrollers consist of several devices featuring different sets of peripherals targeted for various applications. The architecture, combined with five low-power modes is optimized to achieve extended battery life in portable measurement applications. The device features a powerful 16-bit RISC CPU, 16-bit registers, and constant generators that contribute to maximum code efficiency. The digitally controlled oscillator (DCO) allows wake-up from low-power modes to active mode in less than 1 µs.

The MSP430F22x4/MSP430F22x2 series is an ultra-low-power mixed signal microcontroller with two built-in 16-bit timers, a universal serial communication interface, 10-bit A/D converter with integrated reference and data transfer controller (DTC), two general-purpose operational amplifiers in the MSP430F22x4 devices, and 32 I/O pins.

Typical applications include sensor systems that capture analog signals, convert them to digital values, and then process the data for display or for transmission to a host system. Stand-alone radio-frequency (RF) sensor front ends are another area of application.

Table 1. Available Options

T_A	PACKAGED DEVICES(1)(2)		
	PLASTIC 49-PIN BGA (YFF)	PLASTIC 38-PIN TSSOP (DA)	PLASTIC 40-PIN QFN (RHA)
-40°C to 85°C	MSP430F2232IYFF	MSP430F2232IDA	MSP430F2232IRHA
	MSP430F2252IYFF	MSP430F2252IDA	MSP430F2252IRHA
	MSP430F2272IYFF	MSP430F2272IDA	MSP430F2272IRHA
	MSP430F2234IYFF	MSP430F2234IDA	MSP430F2234IRHA
	MSP430F2254IYFF	MSP430F2254IDA	MSP430F2254IRHA
	MSP430F2274IYFF	MSP430F2274IDA	MSP430F2274IRHA
-40°C to 105°C		MSP430F2232TDA	MSP430F2232TRHA
		MSP430F2252TDA	MSP430F2252TRHA
		MSP430F2272TDA	MSP430F2272TRHA
		MSP430F2234TDA	MSP430F2234TRHA
		MSP430F2254TDA	MSP430F2254TRHA
		MSP430F2274TDA	MSP430F2274TRHA

(1) For the most current package and ordering information, see the Package Option Addendum at the end of this document, or see the TI web site at www.ti.com.
(2) Package drawings, thermal data, and symbolization are available at www.ti.com/packaging.

Development Tool Support

All MSP430™ microcontrollers include an Embedded Emulation Module (EEM) that allows advanced debugging and programming through easy-to-use development tools. Recommended hardware options include:

- Debugging and Programming Interface
  - MSP-FET430UIF (USB)
  - MSP-FET430PIF (Parallel Port)
- Debugging and Programming Interface with Target Board
  - MSP-FET430U38 (DA package)
- Production Programmer
  - MSP-GANG430

Copyright © 2006–2012, Texas Instruments Incorporated

MSP430F22x2 Device Pinout, DA Package

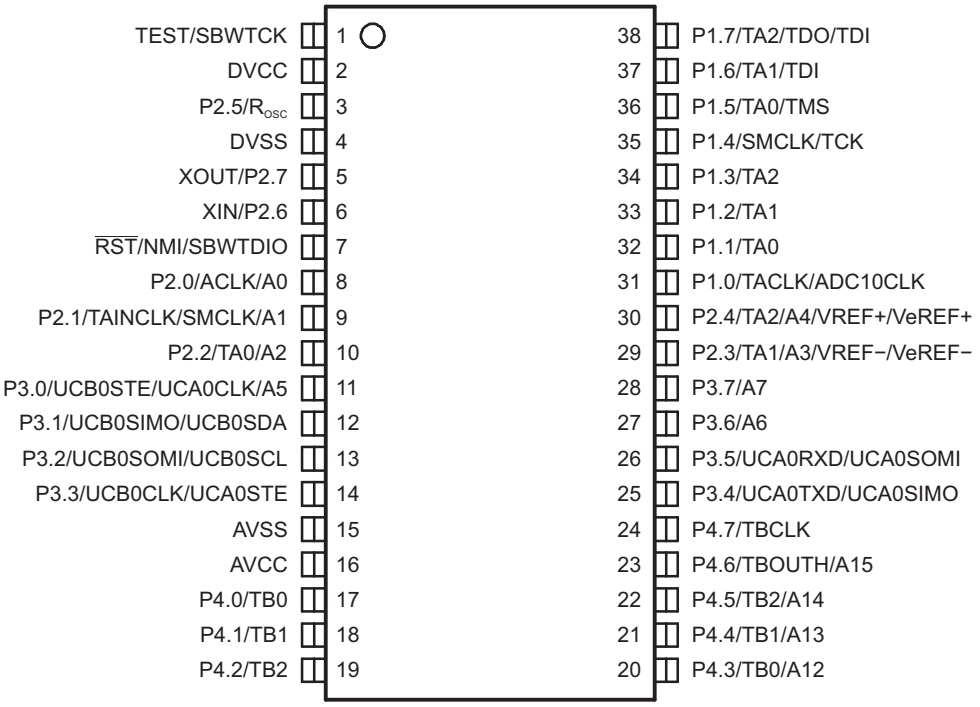

MSP430F22x4 Device Pinout, DA Package

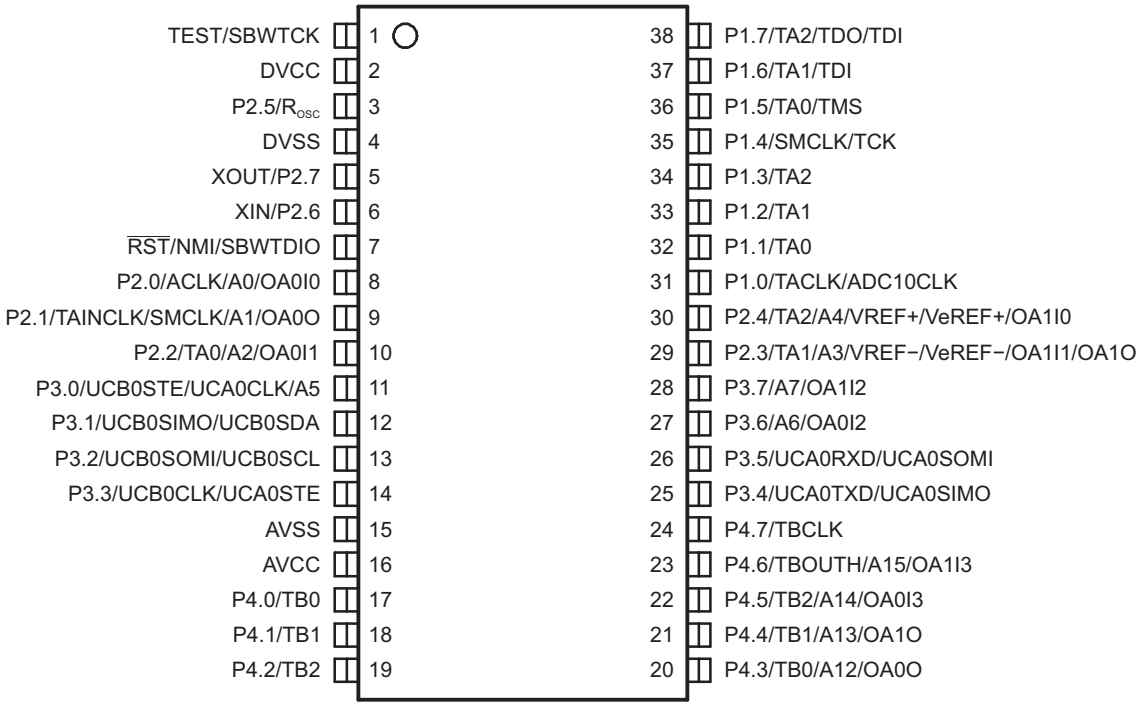

Copyright © 2006–2012, Texas Instruments Incorporated

MSP430F22x2 Device Pinout, RHA Package

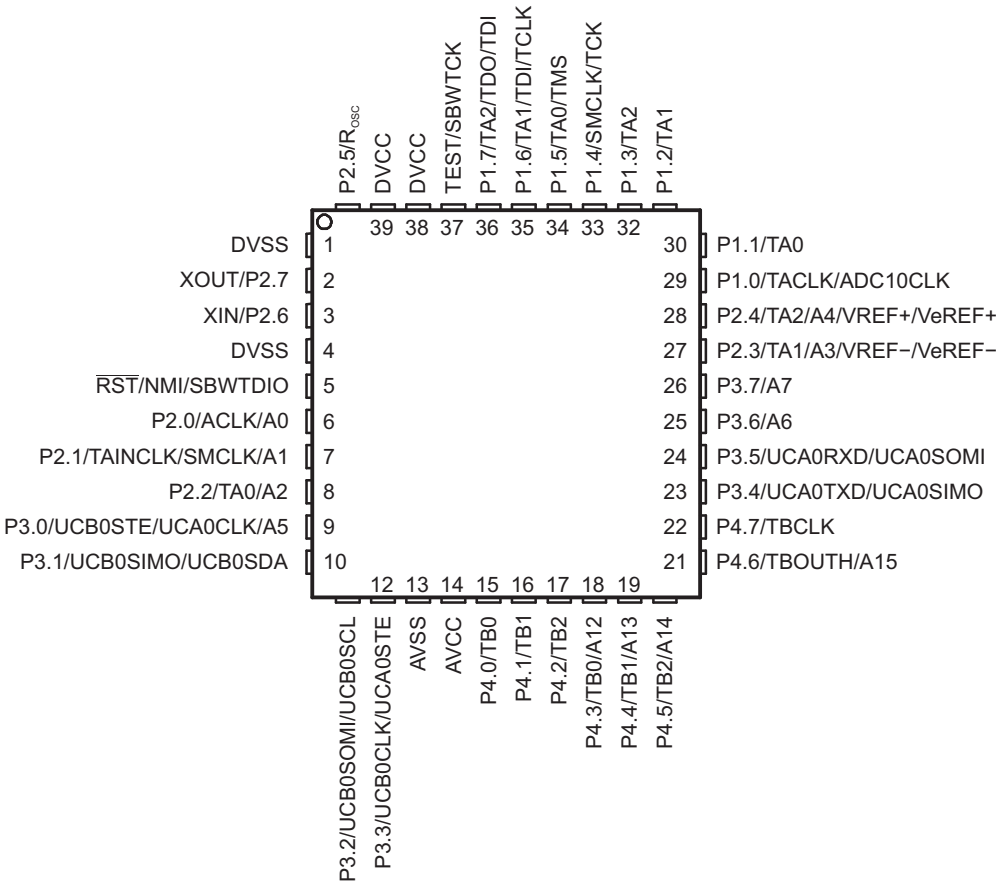

Copyright © 2006–2012, Texas Instruments Incorporated

MSP430F22x4 Device Pinout, RHA Package

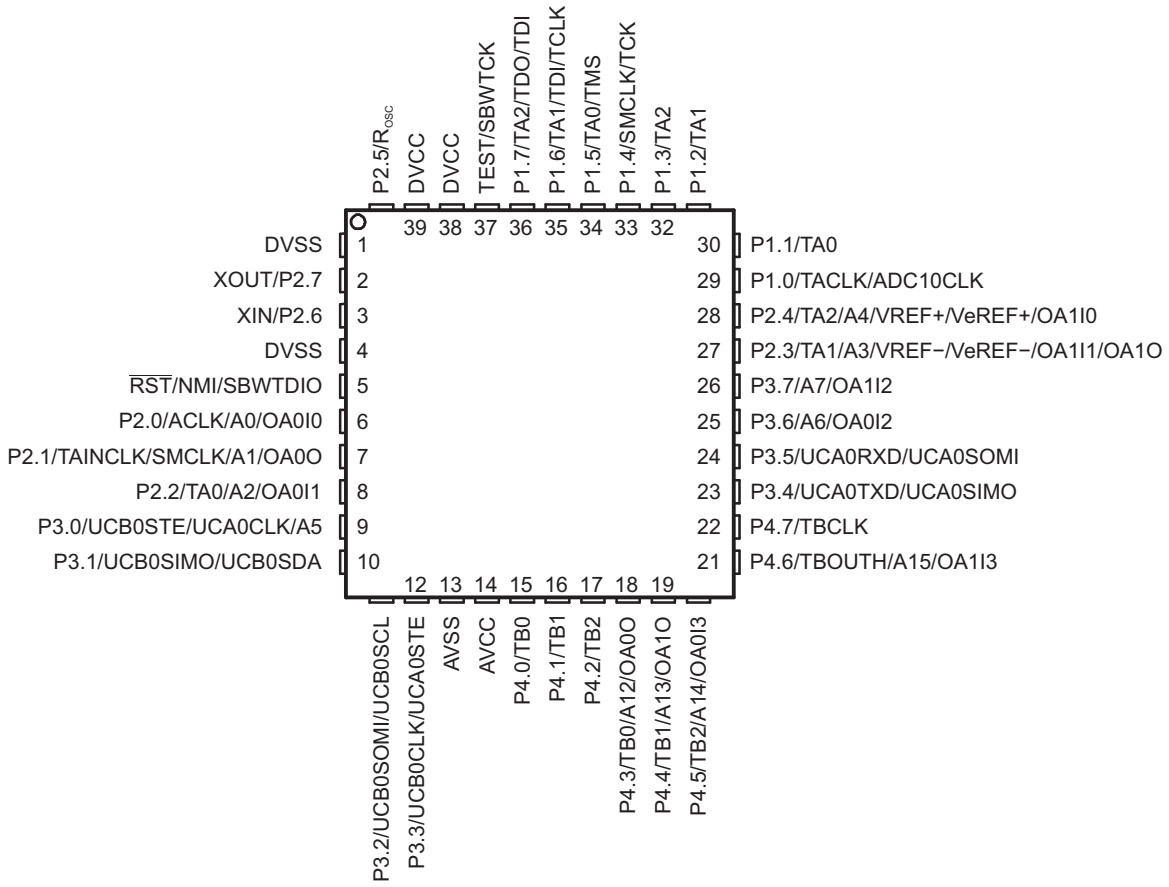

MSP430F22x4, MSP430F22x2 Device Pinout, YFF Package

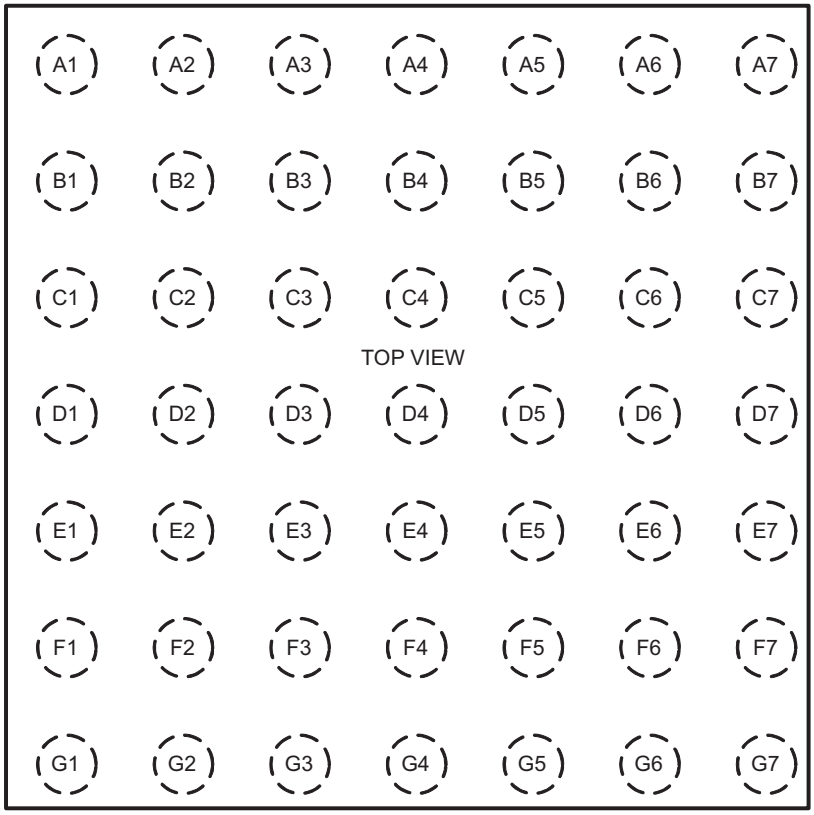

Package Dimensions

The package dimensions for this YFF package are shown in Table 2. See the package drawing at the end of this data sheet for more details.

Table 2. YFF Package Dimensions

PACKAGED DEVICES	D	E
MSP430F22x2 MSP430F22x4	3.33 ± 0.03 mm	3.49 ± 0.03 mm

Copyright © 2006–2012, Texas Instruments Incorporated

MSP430F22x2 Functional Block Diagram

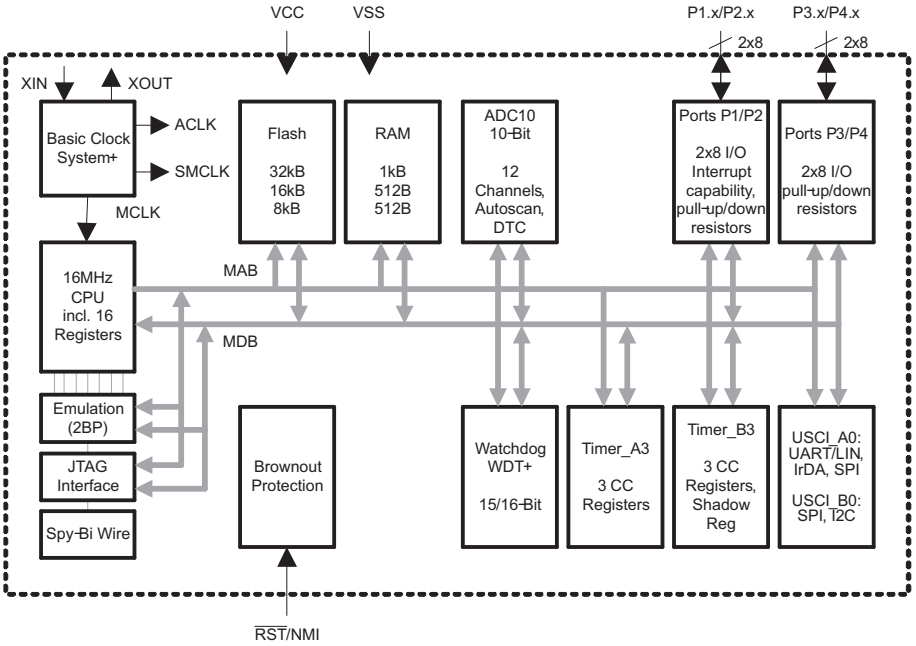

MSP430F22x4 Functional Block Diagram

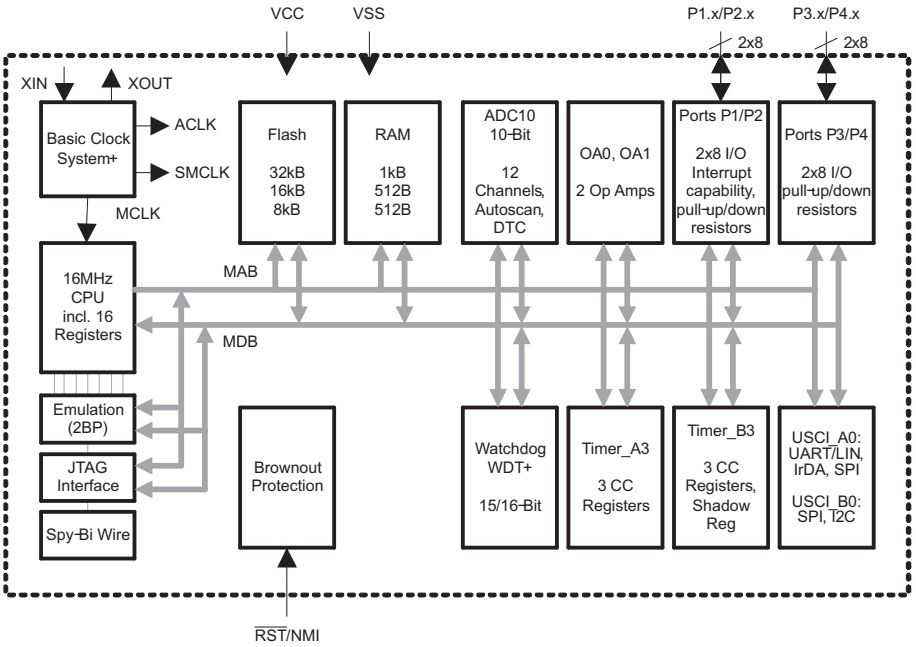

Copyright © 2006–2012, Texas Instruments Incorporated

Table 3. Terminal Functions, MSP430F22x2

TERMINAL				I/O	DESCRIPTION
NAME	NO.				
	YFF	DA	RHA		
P1.0/TACLK/ADC10CLK	F2	31	29	I/O	General-purpose digital I/O pin Timer_A, clock signal TACLK input ADC10, conversion clock
P1.1/TA0	G2	32	30	I/O	General-purpose digital I/O pin Timer_A, capture: CCI0A input, compare: OUT0 output BSL transmit
P1.2/TA1	E2	33	31	I/O	General-purpose digital I/O pin Timer_A, capture: CCI1A input, compare: OUT1 output
P1.3/TA2	G1	34	32	I/O	General-purpose digital I/O pin Timer_A, capture: CCI2A input, compare: OUT2 output
P1.4/SMCLK/TCK	F1	35	33	I/O	General-purpose digital I/O pin SMCLK signal output Test Clock input for device programming and test
P1.5/TA0/TMS	E1	36	34	I/O	General-purpose digital I/O pin Timer_A, compare: OUT0 output Test Mode Select input for device programming and test
P1.6/TA1/TDI/TCLK	E3	37	35	I/O	General-purpose digital I/O pin Timer_A, compare: OUT1 output Test Data Input or Test Clock Input for programming and test
P1.7/TA2/TDO/TDI (1)	D2	38	36	I/O	General-purpose digital I/O pin Timer_A, compare: OUT2 output Test Data Output or Test Data Input for programming and test
P2.0/ACLK/A0	A4	8	6	I/O	General-purpose digital I/O pin ACLK output ADC10, analog input A0
P2.1/TAINCLK/SMCLK/A1	B4	9	7	I/O	General-purpose digital I/O pin Timer_A, clock signal at INCLK SMCLK signal output ADC10, analog input A1
P2.2/TA0/A2	A5	10	8	I/O	General-purpose digital I/O pin Timer_A, capture: CCI0B input/BSL receive, compare: OUT0 output ADC10, analog input A2
P2.3/TA1/A3/V_{REF-}/ V_{eREF-}	F3	29	27	I/O	General-purpose digital I/O pin Timer_A, capture CCI1B input, compare: OUT1 output ADC10, analog input A3 Negative reference voltage input
P2.4/TA2/A4/V_{REF+}/ V_{eREF+}	G3	30	28	I/O	General-purpose digital I/O pin Timer_A, compare: OUT2 output ADC10, analog input A4 Positive reference voltage output or input
P2.5/R_{OSC}	C2	3	40	I/O	General-purpose digital I/O pin Input for external DCO resistor to define DCO frequency
XIN/P2.6	A2	6	3	I/O	Input terminal of crystal oscillator General-purpose digital I/O pin

(1) TDO or TDI is selected via JTAG instruction.

Copyright © 2006–2012, Texas Instruments Incorporated

Table 3. Terminal Functions, MSP430F22x2 (continued)

TERMINAL				I/O	DESCRIPTION
NAME	NO.				
	YFF	DA	RHA		
XOUT/P2.7	A1	5	2	I/O	Output terminal of crystal oscillator General-purpose digital I/O pin(2)
P3.0/UCB0STE/UCA0CLK/ A5	B5	11	9	I/O	General-purpose digital I/O pin USCI_B0 slave transmit enable USCI_A0 clock input/output ADC10, analog input A5
P3.1/UCB0SIMO/ UCB0SDA	A6	12	10	I/O	General-purpose digital I/O pin USCI_B0 SPI mode: slave in/master out USCI_B0 I2C mode: SDA I2C data
P3.2/UCB0SOMI/UCB0SCL	A7	13	11	I/O	General-purpose digital I/O pin USCI_B0 SPI mode: slave out/master in USCI_B0 I2C mode: SCL I2C clock
P3.3/UCB0CLK/UCA0STE	B6	14	12	I/O	General-purpose digital I/O pin USCI_B0 clock input/output USCI_A0 slave transmit enable
P3.4/UCA0TXD/ UCA0SIMO	G6	25	23	I/O	General-purpose digital I/O pin USCI_A0 UART mode: transmit data output USCI_A0 SPI mode: slave in/master out
P3.5/UCA0RXD/ UCA0SOMI	G5	26	24	I/O	General-purpose digital I/O pin USCI_A0 UART mode: receive data input USCI_A0 SPI mode: slave out/master in
P3.6/A6	F4	27	25	I/O	General-purpose digital I/O pin ADC10 analog input A6
P3.7/A7	G4	28	26	I/O	General-purpose digital I/O pin ADC10 analog input A7
P4.0/TB0	D6	17	15	I/O	General-purpose digital I/O pin Timer_B, capture: CCI0A input, compare: OUT0 output
P4.1/TB1	D7	18	16	I/O	General-purpose digital I/O pin Timer_B, capture: CCI1A input, compare: OUT1 output
P4.2/TB2	E6	19	17	I/O	General-purpose digital I/O pin Timer_B, capture: CCI2A input, compare: OUT2 output
P4.3/TB0/A12	E7	20	18	I/O	General-purpose digital I/O pin Timer_B, capture: CCI0B input, compare: OUT0 output ADC10 analog input A12
P4.4/TB1/A13	F7	21	19	I/O	General-purpose digital I/O pin Timer_B, capture: CCI1B input, compare: OUT1 output ADC10 analog input A13
P4.5/TB2/A14	F6	22	20	I/O	General-purpose digital I/O pin Timer_B, compare: OUT2 output ADC10 analog input A14
P4.6/TBOUTH/A15	G7	23	21	I/O	General-purpose digital I/O pin Timer_B, switch all TB0 to TB3 outputs to high impedance ADC10 analog input A15

(2) If XOUT/P2.7 is used as an input, excess current flows until P2SEL.7 is cleared. This is due to the oscillator output driver connection to this pad after reset.

Copyright © 2006–2012, Texas Instruments Incorporated

Table 3. Terminal Functions, MSP430F22x2 (continued)

TERMINAL				I/O	DESCRIPTION
NAME	NO.				
	YFF	DA	RHA		
P4.7/TBCLK	F5	24	22	I/O	General-purpose digital I/O pin Timer_B, clock signal TBCLK input
$\overline{RST}$/NMI/SBWTDIO	B3	7	5	I	Reset or nonmaskable interrupt input Spy-Bi-Wire test data input/output during programming and test
TEST/SBWTCK	D1	1	37	I	Selects test mode for JTAG pins on Port 1. The device protection fuse is connected to TEST. Spy-Bi-Wire test clock input during programming and test
DV_{CC}	C1, D3, D4, E4, E5	2	38, 39		Digital supply voltage
AV_{CC}	C6, C7, D5	16	14		Analog supply voltage
DV_{SS}	A3, B1, B2, C3, C4	4	1, 4		Digital ground reference
AV_{SS}	B7, C5	15	13		Analog ground reference
QFN Pad	NA	NA	Pad	NA	QFN package pad; connection to DV_{SS} recommended.

Copyright © 2006–2012, Texas Instruments Incorporated

Table 4. Terminal Functions, MSP430F22x4

TERMINAL				I/O	DESCRIPTION
NAME	NO.				
	YFF	DA	RHA		
P1.0/TACLK/ADC10CLK	F2	31	29	I/O	General-purpose digital I/O pin Timer_A, clock signal TACLK input ADC10, conversion clock
P1.1/TA0	G2	32	30	I/O	General-purpose digital I/O pin Timer_A, capture: CCI0A input, compare: OUT0 output BSL transmit
P1.2/TA1	E2	33	31	I/O	General-purpose digital I/O pin Timer_A, capture: CCI1A input, compare: OUT1 output
P1.3/TA2	G1	34	32	I/O	General-purpose digital I/O pin Timer_A, capture: CCI2A input, compare: OUT2 output
P1.4/SMCLK/TCK	F1	35	33	I/O	General-purpose digital I/O pin SMCLK signal output Test Clock input for device programming and test
P1.5/TA0/TMS	E1	36	34	I/O	General-purpose digital I/O pin Timer_A, compare: OUT0 output Test Mode Select input for device programming and test
P1.6/TA1/TDI/TCLK	E3	37	35	I/O	General-purpose digital I/O pin Timer_A, compare: OUT1 output Test Data Input or Test Clock Input for programming and test
P1.7/TA2/TDO/TDI (1)	D2	38	36	I/O	General-purpose digital I/O pin Timer_A, compare: OUT2 output Test Data Output or Test Data Input for programming and test
P2.0/ACLK/A0/OA0I0	A4	8	6	I/O	General-purpose digital I/O pin ACLK output ADC10, analog input A0 OA0, analog input IO
P2.1/TAINCLK/SMCLK/ A1/OA0O	B4	9	7	I/O	General-purpose digital I/O pin Timer_A, clock signal at INCLK SMCLK signal output ADC10, analog input A1 OA0, analog output
P2.2/TA0/A2/OA0I1	A5	10	8	I/O	General-purpose digital I/O pin Timer_A, capture: CCI0B input/BSL receive, compare: OUT0 output ADC10, analog input A2 OA0, analog input I1
P2.3/TA1/A3/ V_{REF-}/V_{eREF-}/ OA1I1/OA1O	F3	29	27	I/O	General-purpose digital I/O pin Timer_A, capture CCI1B input, compare: OUT1 output ADC10, analog input A3 Negative reference voltage input OA1, analog input I1 OA1, analog output

(1) TDO or TDI is selected via JTAG instruction.

Copyright © 2006–2012, Texas Instruments Incorporated

Table 4. Terminal Functions, MSP430F22x4 (continued)

TERMINAL				I/O	DESCRIPTION
NAME	NO.				
	YFF	DA	RHA		
P2.4/TA2/A4/ V_{REF+}/V_{eREF+}/OA1I0	G3	30	28	I/O	General-purpose digital I/O pin Timer_A, compare: OUT2 output ADC10, analog input A4 Positive reference voltage output or input OA1, analog input I/O
P2.5/R_{OSC}	C2	3	40	I/O	General-purpose digital I/O pin Input for external DCO resistor to define DCO frequency
XIN/P2.6	A2	6	3	I/O	Input terminal of crystal oscillator General-purpose digital I/O pin
XOUT/P2.7	A1	5	2	I/O	Output terminal of crystal oscillator General-purpose digital I/O pin(2)
P3.0/UCB0STE/UCA0CLK/ A5	B5	11	9	I/O	General-purpose digital I/O pin USCI_B0 slave transmit enable USCI_A0 clock input/output ADC10, analog input A5
P3.1/UCB0SIMO/ UCB0SDA	A6	12	10	I/O	General-purpose digital I/O pin USCI_B0 SPI mode: slave in/master out USCI_B0 I2C mode: SDA I2C data
P3.2/UCB0SOMI/UCB0SCL	A7	13	11	I/O	General-purpose digital I/O pin USCI_B0 SPI mode: slave out/master in USCI_B0 I2C mode: SCL I2C clock
P3.3/UCB0CLK/UCA0STE	B6	14	12	I/O	General-purpose digital I/O pin USCI_B0 clock input/output USCI_A0 slave transmit enable
P3.4/UCA0TXD/ UCA0SIMO	G6	25	23	I/O	General-purpose digital I/O pin USCI_A0 UART mode: transmit data output USCI_A0 SPI mode: slave in/master out
P3.5/UCA0RXD/ UCA0SOMI	G5	26	24	I/O	General-purpose digital I/O pin USCI_A0 UART mode: receive data input USCI_A0 SPI mode: slave out/master in
P3.6/A6/OA0I2	F4	27	25	I/O	General-purpose digital I/O pin ADC10 analog input A6 OA0 analog input I2
P3.7/A7/OA1I2	G4	28	26	I/O	General-purpose digital I/O pin ADC10 analog input A7 OA1 analog input I2
P4.0/TB0	D6	17	15	I/O	General-purpose digital I/O pin Timer_B, capture: CCI0A input, compare: OUT0 output
P4.1/TB1	D7	18	16	I/O	General-purpose digital I/O pin Timer_B, capture: CCI1A input, compare: OUT1 output
P4.2/TB2	E6	19	17	I/O	General-purpose digital I/O pin Timer_B, capture: CCI2A input, compare: OUT2 output

(2) If XOUT/P2.7 is used as an input, excess current flows until P2SEL.7 is cleared. This is due to the oscillator output driver connection to this pad after reset.

Copyright © 2006–2012, Texas Instruments Incorporated

Table 4. Terminal Functions, MSP430F22x4 (continued)

TERMINAL				I/O	DESCRIPTION
NAME	NO.				
	YFF	DA	RHA		
P4.3/TB0/A12/OA0O	E7	20	18	I/O	General-purpose digital I/O pin Timer_B, capture: CCI0B input, compare: OUT0 output ADC10 analog input A12 OA0 analog output
P4.4/TB1/A13/OA1O	F7	21	19	I/O	General-purpose digital I/O pin Timer_B, capture: CCI1B input, compare: OUT1 output ADC10 analog input A13 OA1 analog output
P4.5/TB2/A14/OA0I3	F6	22	20	I/O	General-purpose digital I/O pin Timer_B, compare: OUT2 output ADC10 analog input A14 OA0 analog input I3
P4.6/TBOUTH/A15/OA1I3	G7	23	21	I/O	General-purpose digital I/O pin Timer_B, switch all TB0 to TB3 outputs to high impedance ADC10 analog input A15 OA1 analog input I3
P4.7/TBCLK	F5	24	22	I/O	General-purpose digital I/O pin Timer_B, clock signal TBCLK input
$\overline{\text{RST}}$/NMI/SBWTDIO	B3	7	5	I	Reset or nonmaskable interrupt input Spy-Bi-Wire test data input/output during programming and test
TEST/SBWTCK	D1	1	37	I	Selects test mode for JTAG pins on Port 1. The device protection fuse is connected to TEST. Spy-Bi-Wire test clock input during programming and test
DV_{CC}	C1, D3, D4, E4, E5	2	38, 39		Digital supply voltage
AV_{CC}	C6, C7, D5	16	14		Analog supply voltage
DV_{SS}	A3, B1, B2, C3, C4	4	1, 4		Digital ground reference
AV_{SS}	B7, C5	15	13		Analog ground reference
QFN Pad	NA	NA	Pad	NA	QFN package pad; connection to DV_{SS} recommended.

Copyright © 2006–2012, Texas Instruments Incorporated

SHORT-FORM DESCRIPTION

CPU

The MSP430™ CPU has a 16-bit RISC architecture that is highly transparent to the application. All operations, other than program-flow instructions, are performed as register operations in conjunction with seven addressing modes for source operand and four addressing modes for destination operand.

The CPU is integrated with 16 registers that provide reduced instruction execution time. The register-to-register operation execution time is one cycle of the CPU clock.

Four of the registers, R0 to R3, are dedicated as program counter, stack pointer, status register, and constant generator respectively. The remaining registers are general-purpose registers.

Peripherals are connected to the CPU using data, address, and control buses and can be handled with all instructions.

Instruction Set

The instruction set consists of 51 instructions with three formats and seven address modes. Each instruction can operate on word and byte data. Table 5 shows examples of the three types of instruction formats; Table 6 shows the address modes.

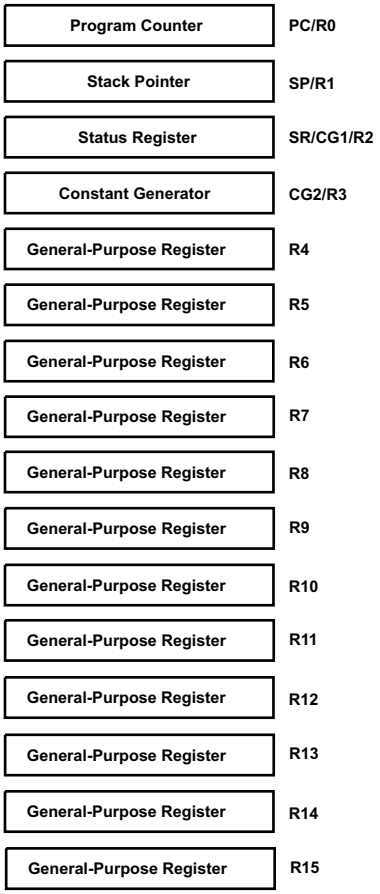

Table 5. Instruction Word Formats

INSTRUCTION FORMAT	EXAMPLE	OPERATION
Dual operands, source-destination	ADD R4,R5	R4 + R5 → R5
Single operands, destination only	CALL R8	PC → (TOS), R8 → PC
Relative jump, unconditional/conditional	JNE	Jump-on-equal bit = 0

Table 6. Address Mode Descriptions

ADDRESS MODE	S (1)	D (2)	SYNTAX	EXAMPLE	OPERATION
Register	✓	✓	MOV Rs,Rd	MOV R10,R11	R10 → R11
Indexed	✓	✓	MOV X(Rn),Y(Rm)	MOV 2(R5),6(R6)	M(2+R5) → M(6+R6)
Symbolic (PC relative)	✓	✓	MOV EDE,TONI		M(EDE) → M(TONI)
Absolute	✓	✓	MOV &MEM,&TCDAT		M(MEM) → M(TCDAT)
Indirect	✓		MOV @Rn,Y(Rm)	MOV @R10,Tab(R6)	M(R10) → M(Tab+R6)
Indirect autoincrement	✓		MOV @Rn+,Rm	MOV @R10+,R11	M(R10) → R11 R10 + 2 → R10
Immediate	✓		MOV #X,TONI	MOV #45,TONI	#45 → M(TONI)

(1) S = source
(2) D = destination

Copyright © 2006–2012, Texas Instruments Incorporated

Operating Modes

The MSP430 microcontrollers have one active mode and five software-selectable low-power modes of operation. An interrupt event can wake up the device from any of the five low-power modes, service the request, and restore back to the low-power mode on return from the interrupt program.

The following six operating modes can be configured by software:

- Active mode (AM)
  - All clocks are active.
- Low-power mode 0 (LPM0)
  - CPU is disabled.
  - ACLK and SMCLK remain active. MCLK is disabled.
- Low-power mode 1 (LPM1)
  - CPU is disabled ACLK and SMCLK remain active. MCLK is disabled.
  - DCO dc-generator is disabled if DCO not used in active mode.
- Low-power mode 2 (LPM2)
  - CPU is disabled.
  - MCLK and SMCLK are disabled.
  - DCO dc-generator remains enabled.
  - ACLK remains active.
- Low-power mode 3 (LPM3)
  - CPU is disabled.
  - MCLK and SMCLK are disabled.
  - DCO dc-generator is disabled.
  - ACLK remains active.
- Low-power mode 4 (LPM4)
  - CPU is disabled.
  - ACLK is disabled.
  - MCLK and SMCLK are disabled.
  - DCO dc-generator is disabled.
  - Crystal oscillator is stopped.

Copyright © 2006–2012, Texas Instruments Incorporated

Interrupt Vector Addresses

The interrupt vectors and the power-up starting address are located in the address range of 0FFFFh to 0FFC0h. The vector contains the 16-bit address of the appropriate interrupt handler instruction sequence.

If the reset vector (located at address 0FFFEh) contains 0FFFFh (for example, if flash is not programmed), the CPU goes into LPM4 immediately after power up.

Table 7. Interrupt Vector Addresses

INTERRUPT SOURCE	INTERRUPT FLAG	SYSTEM INTERRUPT	WORD ADDRESS	PRIORITY
Power-up External reset Watchdog Flash key violation PC out-of-range(1)	PORIFG RSTIFG WDTIFG KEYV(2)	Reset	0FFFEh	31, highest
NMI Oscillator fault Flash memory access violation	NMIIFG OFIFG ACCVIFG(2)(3)	(non)-maskable, (non)-maskable, (non)-maskable	0FFFCh	30
Timer_B3	TBCCR0 CCIFG(4)	maskable	0FFFAh	29
Timer_B3	TBCCR1 and TBCCR2 CCIFGs, TBIFG(2)(4)	maskable	0FFF8h	28
			0FFF6h	27
Watchdog Timer	WDTIFG	maskable	0FFF4h	26
Timer_A3	TACCR0 CCIFG (see Note 3)	maskable	0FFF2h	25
Timer_A3	TACCR1 CCIFG TACCR2 CCIFG TAIFG(2)(4)	maskable	0FFF0h	24
USCI_A0/USCI_B0 Receive	UCA0RXIFG, UCB0RXIFG(2)	maskable	0FFEEh	23
USCI_A0/USCI_B0 Transmit	UCA0TXIFG, UCB0TXIFG(2)	maskable	0FFECh	22
ADC10	ADC10IFG(4)	maskable	0FFEAh	21
			0FFE8h	20
I/O Port P2 (eight flags)	P2IFG.0 to P2IFG.7(2)(4)	maskable	0FFE6h	19
I/O Port P1 (eight flags)	P1IFG.0 to P1IFG.7(2)(4)	maskable	0FFE4h	18
			0FFE2h	17
			0FFE0h	16
(5)			0FFDEh	15
(6)			0FFDCh to 0FFC0h	14 to 0, lowest

(1) A reset is generated if the CPU tries to fetch instructions from within the module register memory address range (0h to 01FFh) or from within unused address range.
(2) Multiple source flags
(3) (non)-maskable: the individual interrupt-enable bit can disable an interrupt event, but the general interrupt enable cannot.
Nonmaskable: neither the individual nor the general interrupt-enable bit will disable an interrupt event.
(4) Interrupt flags are located in the module.
(5) This location is used as bootstrap loader security key (BSLSKEY).
A 0AA55h at this location disables the BSL completely.
A zero (0h) disables the erasure of the flash if an invalid password is supplied.
(6) The interrupt vectors at addresses 0FFDCh to 0FFC0h are not used in this device and can be used for regular program code if necessary.

Copyright © 2006–2012, Texas Instruments Incorporated

Special Function Registers

Most interrupt and module enable bits are collected into the lowest address space. Special function register bits not allocated to a functional purpose are not physically present in the device. Simple software access is provided with this arrangement.

Legend

rw	Bit can be read and written.
rw-0, 1	Bit can be read and written. It is Reset or Set by PUC.
rw-(0), (1)	Bit can be read and written. It is Reset or Set by POR.
	SFR bit is not present in device.

Table 8. Interrupt Enable 1

Address	7	6	5	4	3	2	1	0
00h			**ACCVIE**	**NMIIE**			**OFIE**	**WDTIE**
			rw-0	**rw-0**			**rw-0**	**rw-0**

WDTIE	Watchdog timer interrupt enable. Inactive if watchdog mode is selected. Active if watchdog timer is configured in interval timer mode.
OFIE	Oscillator fault interrupt enable
NMIIE	(Non)maskable interrupt enable
ACCVIE	Flash access violation interrupt enable

Table 9. Interrupt Enable 2

Address	7	6	5	4	3	2	1	0
01h					**UCB0TXIE**	**UCB0RXIE**	**UCA0TXIE**	**UCA0RXIE**
					rw-0	rw-0	rw-0	rw-0

UCA0RXIE	USCI_A0 receive-interrupt enable
UCA0TXIE	USCI_A0 transmit-interrupt enable
UCB0RXIE	USCI_B0 receive-interrupt enable
UCB0TXIE	USCI_B0 transmit-interrupt enable

Table 10. Interrupt Flag Register 1

Address	7	6	5	4	3	2	1	0
02h				**NMIIFG**	**RSTIFG**	**PORIFG**	**OFIFG**	**WDTIFG**
				rw-0	**rw-(0)**	**rw-(1)**	**rw-1**	**rw-(0)**

WDTIFG	Set on watchdog timer overflow (in watchdog mode) or security key violation. Reset on V_{CC} power-up or a reset condition at $\overline{RST}$/NMI pin in reset mode.
OFIFG	Flag set on oscillator fault
RSTIFG	External reset interrupt flag. Set on a reset condition at $\overline{RST}$/NMI pin in reset mode. Reset on V_{CC} power up.
PORIFG	Power-on reset interrupt flag. Set on V_{CC} power up.
NMIIFG	Set via $\overline{RST}$/NMI pin

Table 11. Interrupt Flag Register 2

Address	7	6	5	4	3	2	1	0
03h					**UCB0TXIFG**	**UCB0RXIFG**	**UCA0TXIFG**	**UCA0RXIFG**
					rw-1	rw-0	rw-1	rw-0

UCA0RXIFG	USCI_A0 receive-interrupt flag
UCA0TXIFG	USCI_A0 transmit-interrupt flag
UCB0RXIFG	USCI_B0 receive-interrupt flag
UCB0TXIFG	USCI_B0 transmit-interrupt flag

Copyright © 2006–2012, Texas Instruments Incorporated

Memory Organization

Table 12. Memory Organization

		MSP430F223x	MSP430F225x	MSP430F227x
Memory Main: interrupt vector Main: code memory	Size Flash Flash	8KB Flash 0FFFFh-0FFC0h 0FFFFh-0E000h	16KB Flash 0FFFFh-0FFC0h 0FFFFh-0C000h	32KB Flash 0FFFFh-0FFC0h 0FFFFh-08000h
Information memory	Size Flash	256 Byte 010FFh-01000h	256 Byte 010FFh-01000h	256 Byte 010FFh-01000h
Boot memory	Size ROM	1KB 0FFFh-0C00h	1KB 0FFFh-0C00h	1KB 0FFFh-0C00h
RAM	Size	512 Byte 03FFh-0200h	512 Byte 03FFh-0200h	1KB 05FFh-0200h
Peripherals	16-bit 8-bit 8-bit SFR	01FFh-0100h 0FFh-010h 0Fh-00h	01FFh-0100h 0FFh-010h 0Fh-00h	01FFh-0100h 0FFh-010h 0Fh-00h

Bootstrap Loader (BSL)

The MSP430 bootstrap loader (BSL) enables users to program the flash memory or RAM using a UART serial interface. Access to the MSP430 memory via the BSL is protected by user-defined password. For complete description of the features of the BSL and its implementation, see the *MSP430 Programming Via the Bootstrap Loader User's Guide* (SLAU319).

Table 13. BSL Function Pins

BSL FUNCTION	DA PACKAGE PINS	RHA PACKAGE PINS	YFF PACKAGE PINS
Data transmit	32 - P1.1	30 - P1.1	G3 - P1.1
Data receive	10 - P2.2	8 - P2.2	A5 - P2.2

Flash Memory

The flash memory can be programmed via the JTAG port, the bootstrap loader, or in-system by the CPU. The CPU can perform single-byte and single-word writes to the flash memory. Features of the flash memory include:

- Flash memory has n segments of main memory and four segments of information memory (A to D) of 64 bytes each. Each segment in main memory is 512 bytes in size.
- Segments 0 to n may be erased in one step, or each segment may be individually erased.
- Segments A to D can be erased individually, or as a group with segments 0 to n.
  Segments A to D are also called *information memory*.
- Segment A contains calibration data. After reset, segment A is protected against programming and erasing. It can be unlocked, but care should be taken not to erase this segment if the device-specific calibration data is required.

Copyright © 2006–2012, Texas Instruments Incorporated

Peripherals

Peripherals are connected to the CPU through data, address, and control buses and can be handled using all instructions. For complete module descriptions, see the *MSP430x2xx Family User's Guide* (SLAU144).

Oscillator and System Clock

The clock system is supported by the basic clock module that includes support for a 32768-Hz watch crystal oscillator, an internal very-low-power low-frequency oscillator, an internal digitally-controlled oscillator (DCO), and a high-frequency crystal oscillator. The basic clock module is designed to meet the requirements of both low system cost and low power consumption. The internal DCO provides a fast turn-on clock source and stabilizes in less than 1 µs. The basic clock module provides the following clock signals:

- Auxiliary clock (ACLK), sourced from a 32768-Hz watch crystal, a high-frequency crystal, or the internal very-low-power LF oscillator.
- Main clock (MCLK), the system clock used by the CPU.
- Sub-Main clock (SMCLK), the sub-system clock used by the peripheral modules.

Table 14. DCO Calibration Data (Provided From Factory in Flash Information Memory Segment A)

DCO FREQUENCY	CALIBRATION REGISTER	SIZE	ADDRESS
1 MHz	CALBC1_1MHZ	byte	010FFh
	CALDCO_1MHZ	byte	010FEh
8 MHz	CALBC1_8MHZ	byte	010FDh
	CALDCO_8MHZ	byte	010FCh
12 MHz	CALBC1_12MHZ	byte	010FBh
	CALDCO_12MHZ	byte	010FAh
16 MHz	CALBC1_16MHZ	byte	010F9h
	CALDCO_16MHZ	byte	010F8h

Brownout

The brownout circuit is implemented to provide the proper internal reset signal to the device during power on and power off.

Digital I/O

There are four 8-bit I/O ports implemented—ports P1, P2, P3, and P4:

- All individual I/O bits are independently programmable.
- Any combination of input, output, and interrupt condition is possible.
- Edge-selectable interrupt input capability for all eight bits of port P1 and P2.
- Read/write access to port-control registers is supported by all instructions.
- Each I/O has an individually programmable pullup/pulldown resistor.

Because there are only three I/O pins implemented from port P2, bits [5:1] of all port P2 registers read as 0, and write data is ignored.

Watchdog Timer (WDT+)

The primary function of the WDT+ module is to perform a controlled system restart after a software problem occurs. If the selected time interval expires, a system reset is generated. If the watchdog function is not needed in an application, the module can be disabled or configured as an interval timer and can generate interrupts at selected time intervals.

Copyright © 2006–2012, Texas Instruments Incorporated

Timer_A3

Timer_A3 is a 16-bit timer/counter with three capture/compare registers. Timer_A3 can support multiple capture/compares, PWM outputs, and interval timing. Timer_A3 also has extensive interrupt capabilities. Interrupts may be generated from the counter on overflow conditions and from each of the capture/compare registers.

Table 15. Timer_A3 Signal Connections

INPUT PIN NUMBER			DEVICE INPUT SIGNAL	MODULE INPUT NAME	MODULE BLOCK	MODULE OUTPUT SIGNAL	OUTPUT PIN NUMBER		
DA	RHA	YFF					DA	RHA	YFF
31 - P1.0	29 - P1.0	F2 - P1.0	TACLK	TACLK	Timer	NA			
			ACLK	ACLK					
			SMCLK	SMCLK					
9 - P2.1	7 - P2.1	B4 - P2.1	TAINCLK	INCLK					
32 - P1.1	30 - P1.1	G2 - P1.1	TA0	CCI0A	CCR0	TA0	32 - P1.1	30 - P1.1	G2 - P1.1
10 - P2.2	8 - P2.2	A5 - P2.2	TA0	CCI0B			10 - P2.2	8 - P2.2	A5 - P2.2
			V_{SS}	GND			36 - P1.5	34 - P1.5	E1 - P1.5
			V_{CC}	V_{CC}					
33 - P1.2	31 - P1.2	E2 - P1.2	TA1	CCI1A	CCR1	TA1	33 - P1.2	31 - P1.2	E2 - P1.2
29 - P2.3	27 - P2.3	F3 - P2.3	TA1	CCI1B			29 - P2.3	27 - P2.3	F3 - P2.3
			V_{SS}	GND			37 - P1.6	35 - P1.6	E3 - P1.6
			V_{CC}	V_{CC}					
34 - P1.3	32 - P1.3	G1 - P1.3	TA2	CCI2A	CCR2	TA2	34 - P1.3	32 - P1.3	G1 - P1.3
			ACLK (internal)	CCI2B			30 - P2.4	28 - P2.4	G3 - P2.4
			V_{SS}	GND			38 - P1.7	36 - P1.7	D2 - P1.7
			V_{CC}	V_{CC}					

Copyright © 2006–2012, Texas Instruments Incorporated

Timer_B3

Timer_B3 is a 16-bit timer/counter with three capture/compare registers. Timer_B3 can support multiple capture/compares, PWM outputs, and interval timing. Timer_B3 also has extensive interrupt capabilities. Interrupts may be generated from the counter on overflow conditions and from each of the capture/compare registers.

Table 16. Timer_B3 Signal Connections

INPUT PIN NUMBER			DEVICE INPUT SIGNAL	MODULE INPUT NAME	MODULE BLOCK	MODULE OUTPUT SIGNAL	OUTPUT PIN NUMBER		
DA	RHA	YFF					DA	RHA	YFF
24 - P4.7	22 - P4.7	F5 - P4.7	TBCLK	TBCLK	Timer	NA			
			ACLK	ACLK					
			SMCLK	SMCLK					
24 - P4.7	22 - P4.7	F5 - P4.7	TBCLK	INCLK					
17 - P4.0	15 - P4.0	D6 - P4.0	TB0	CCI0A	CCR0	TB0	17 - P4.0	15 - P4.0	D6 - P4.0
20 - P4.3	18 - P4.3	E7 - P4.3	TB0	CCI0B			20 - P4.3	18 - P4.3	E7 - P4.3
			V_{SS}	GND					
			V_{CC}	V_{CC}					
18 - P4.1	16 - P4.1	D7 - P4.1	TB1	CCI1A	CCR1	TB1	18 - P4.1	16 - P4.1	D7 - P4.1
21 - P4.4	19 - P4.4	F7 - P4.4	TB1	CCI1B			21 - P4.4	19 - P4.4	F7 - P4.4
			V_{SS}	GND					
			V_{CC}	V_{CC}					
19 - P4.2	17 - P4.2	E6 - P4.2	TB2	CCI2A	CCR2	TB2	19 - P4.2	17 - P4.2	E6 - P4.2
			ACLK (internal)	CCI2B			22 - P4.5	20 - P4.5	F6 - P4.5
			V_{SS}	GND					
			V_{CC}	V_{CC}					

Universal Serial Communications Interface (USCI)

The USCI module is used for serial data communication. The USCI module supports synchronous communication protocols like SPI (3 or 4 pin), I2C and asynchronous communication protocols such as UART, enhanced UART with automatic baudrate detection (LIN), and IrDA.

USCI_A0 provides support for SPI (3 or 4 pin), UART, enhanced UART, and IrDA.

USCI_B0 provides support for SPI (3 or 4 pin) and I2C.

ADC10

The ADC10 module supports fast, 10-bit analog-to-digital conversions. The module implements a 10-bit SAR core, sample select control, reference generator and data transfer controller, or DTC, for automatic conversion result handling allowing ADC samples to be converted and stored without any CPU intervention.

Copyright © 2006–2012, Texas Instruments Incorporated

Operational Amplifier (OA) (MSP430F22x4 only)

The MSP430F22x4 has two configurable low-current general-purpose operational amplifiers. Each OA input and output terminal is software-selectable and offer a flexible choice of connections for various applications. The OA op amps primarily support front-end analog signal conditioning prior to analog-to-digital conversion.

Table 17. OA0 Signal Connections

ANALOG INPUT PIN NUMBER			DEVICE INPUT SIGNAL	MODULE INPUT NAME
DA	RHA	YFF		
8 - A0	6 - A0	B4 - A0	OA0I0	OAxI0
10 - A2	8 - A2	B5 - A2	OA0I1	OA0I1
10 - A2	8 - A2	B5 - A2	OA0I1	OAxI1
27 - A6	25 - A6	F4 - A6	OA0I2	OAxIA
22 - A14	20 - A14	F6 - A14	OA0I3	OAxIB

Table 18. OA1 Signal Connections

ANALOG INPUT PIN NUMBER			DEVICE INPUT SIGNAL	MODULE INPUT NAME
DA	RHA	YFF		
30 - A4	28 - A4	G3 - A4	OA1I0	OAxI0
10 - A2	8 - A2	B5 - A2	OA0I1	OA0I1
29 - A3	27 - A3	F3 - A3	OA1I1	OAxI1
28 - A7	26 - A7	G4 - A7	OA1I2	OAxIA
23 - A15	21 - A15	G7 - A15	OA1I3	OAxIB

Copyright © 2006–2012, Texas Instruments Incorporated

Peripheral File Map

Table 19. Peripherals With Word Access

MODULE	REGISTER NAME	SHORT NAME	ADDRESS OFFSET
ADC10	ADC data transfer start address	ADC10SA	1BCh
	ADC memory	ADC10MEM	1B4h
	ADC control register 1	ADC10CTL1	1B2h
	ADC control register 0	ADC10CTL0	1B0h
	ADC analog enable 0	ADC10AE0	04Ah
	ADC analog enable 1	ADC10AE1	04Bh
	ADC data transfer control register 1	ADC10DTC1	049h
	ADC data transfer control register 0	ADC10DTC0	048h
Timer_B	Capture/compare register	TBCCR2	0196h
	Capture/compare register	TBCCR1	0194h
	Capture/compare register	TBCCR0	0192h
	Timer_B register	TBR	0190h
	Capture/compare control	TBCCTL2	0186h
	Capture/compare control	TBCCTL1	0184h
	Capture/compare control	TBCCTL0	0182h
	Timer_B control	TBCTL	0180h
	Timer_B interrupt vector	TBIV	011Eh
Timer_A	Capture/compare register	TACCR2	0176h
	Capture/compare register	TACCR1	0174h
	Capture/compare register	TACCR0	0172h
	Timer_A register	TAR	0170h
	Capture/compare control	TACCTL2	0166h
	Capture/compare control	TACCTL1	0164h
	Capture/compare control	TACCTL0	0162h
	Timer_A control	TACTL	0160h
	Timer_A interrupt vector	TAIV	012Eh
Flash Memory	Flash control 3	FCTL3	012Ch
	Flash control 2	FCTL2	012Ah
	Flash control 1	FCTL1	0128h
Watchdog Timer+	Watchdog/timer control	WDTCTL	0120h

Copyright © 2006–2012, Texas Instruments Incorporated

Table 20. Peripherals With Byte Access

MODULE	REGISTER NAME	SHORT NAME	ADDRESS OFFSET
OA1 (MSP430F22x4 only)	Operational Amplifier 1 control register 1	OA1CTL1	0C3h
	Operational Amplifier 1 control register 1	OA1CTL0	0C2h
OA0 (MSP430F22x4 only)	Operational Amplifier 0 control register 1	OA0CTL1	0C1h
	Operational Amplifier 0 control register 1	OA0CTL0	0C0h
USCI_B0	USCI_B0 transmit buffer	UCB0TXBUF	06Fh
	USCI_B0 receive buffer	UCB0RXBUF	06Eh
	USCI_B0 status	UCB0STAT	06Dh
	USCI_B0 bit rate control 1	UCB0BR1	06Bh
	USCI_B0 bit rate control 0	UCB0BR0	06Ah
	USCI_B0 control 1	UCB0CTL1	069h
	USCI_B0 control 0	UCB0CTL0	068h
	USCI_B0 I2C slave address	UCB0SA	011Ah
	USCI_B0 I2C own address	UCB0OA	0118h
USCI_A0	USCI_A0 transmit buffer	UCA0TXBUF	067h
	USCI_A0 receive buffer	UCA0RXBUF	066h
	USCI_A0 status	UCA0STAT	065h
	USCI_A0 modulation control	UCA0MCTL	064h
	USCI_A0 baud rate control 1	UCA0BR1	063h
	USCI_A0 baud rate control 0	UCA0BR0	062h
	USCI_A0 control 1	UCA0CTL1	061h
	USCI_A0 control 0	UCA0CTL0	060h
	USCI_A0 IrDA receive control	UCA0IRRCTL	05Fh
	USCI_A0 IrDA transmit control	UCA0IRTCTL	05Eh
	USCI_A0 auto baud rate control	UCA0ABCTL	05Dh
Basic Clock System+	Basic clock system control 3	BCSCTL3	053h
	Basic clock system control 2	BCSCTL2	058h
	Basic clock system control 1	BCSCTL1	057h
	DCO clock frequency control	DCOCTL	056h
Port P4	Port P4 resistor enable	P4REN	011h
	Port P4 selection	P4SEL	01Fh
	Port P4 direction	P4DIR	01Eh
	Port P4 output	P4OUT	01Dh
	Port P4 input	P4IN	01Ch
Port P3	Port P3 resistor enable	P3REN	010h
	Port P3 selection	P3SEL	01Bh
	Port P3 direction	P3DIR	01Ah
	Port P3 output	P3OUT	019h
	Port P3 input	P3IN	018h
Port P2	Port P2 resistor enable	P2REN	02Fh
	Port P2 selection	P2SEL	02Eh
	Port P2 interrupt enable	P2IE	02Dh
	Port P2 interrupt edge select	P2IES	02Ch
	Port P2 interrupt flag	P2IFG	02Bh
	Port P2 direction	P2DIR	02Ah
	Port P2 output	P2OUT	029h
	Port P2 input	P2IN	028h

Copyright © 2006–2012, Texas Instruments Incorporated

Table 20. Peripherals With Byte Access (continued)

MODULE	REGISTER NAME	SHORT NAME	ADDRESS OFFSET
Port P1	Port P1 resistor enable	P1REN	027h
	Port P1 selection	P1SEL	026h
	Port P1 interrupt enable	P1IE	025h
	Port P1 interrupt edge select	P1IES	024h
	Port P1 interrupt flag	P1IFG	023h
	Port P1 direction	P1DIR	022h
	Port P1 output	P1OUT	021h
	Port P1 input	P1IN	020h
Special Function	SFR interrupt flag 2	IFG2	003h
	SFR interrupt flag 1	IFG1	002h
	SFR interrupt enable 2	IE2	001h
	SFR interrupt enable 1	IE1	000h

Copyright © 2006–2012, Texas Instruments Incorporated

Absolute Maximum Ratings[1]

Voltage applied at V_{CC} to V_{SS}		-0.3 V to 4.1 V
Voltage applied to any pin [2]		-0.3 V to V_{CC} + 0.3 V
Diode current at any device terminal		±2 mA
Storage temperature, T_{stg} [3]	Unprogrammed device	-55°C to 150°C
	Programmed device	-55°C to 150°C

(1) Stresses beyond those listed under *absolute maximum ratings*may cause permanent damage to the device. These are stress ratings only, and functional operation of the device at these or any other conditions beyond those indicated under *recommended operating conditions*is not implied. Exposure to absolute-maximum-rated conditions for extended periods may affect device reliability.
(2) All voltages referenced to V_{SS}. The JTAG fuse-blow voltage, V_{FB}, is allowed to exceed the absolute maximum rating. The voltage is applied to the TEST pin when blowing the JTAG fuse.
(3) Higher temperature may be applied during board soldering process according to the current JEDEC J-STD-020 specification with peak reflow temperatures not higher than classified on the device label on the shipping boxes or reels.

Recommended Operating Conditions[1][2]

				MIN	NOM	MAX	UNIT
V_{CC}	Supply voltage	$AV_{CC} = DV_{CC} = V_{CC}$	During program execution	1.8		3.6	V
			During program/erase flash memory	2.2		3.6	V
V_{SS}	Supply voltage	$AV_{SS} = DV_{SS} = V_{SS}$			0		V
T_A	Operating free-air temperature		I version	-40		85	°C
			T version	-40		105	
f_{SYSTEM}	Processor frequency (maximum MCLK frequency)[1][2] (see Figure 1)	V_{CC} = 1.8 V, Duty cycle = 50% ±10%		dc		4.15	MHz
		V_{CC} = 2.7 V, Duty cycle = 50% ±10%		dc		12	
		V_{CC} ≥ 3.3 V, Duty cycle = 50% ±10%		dc		16	

(1) The MSP430 CPU is clocked directly with MCLK. Both the high and low phase of MCLK must not exceed the pulse width of the specified maximum frequency.
(2) Modules might have a different maximum input clock specification. See the specification of the respective module in this data sheet.

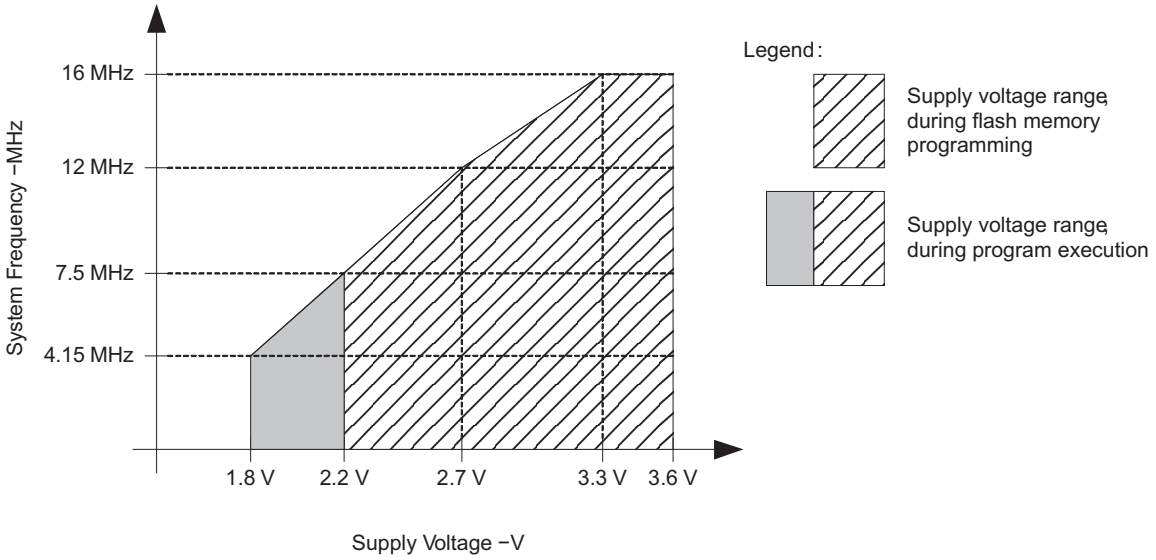

NOTE: Minimum processor frequency is defined by system clock. Flash program or erase operations require a minimum V_{CC} of 2.2 V.

Figure 1. Operating Area

Copyright © 2006–2012, Texas Instruments Incorporated

Active Mode Supply Current (into DV_{CC} + AV_{CC}) Excluding External Current (1)(2)

over recommended ranges of supply voltage and operating free-air temperature (unless otherwise noted)

PARAMETER		TEST CONDITIONS	T_A	V_{CC}	MIN	TYP	MAX	UNIT
$I_{AM,1MHz}$	Active mode (AM) current (1 MHz)	$f_{DCO} = f_{MCLK} = f_{SMCLK}$ = 1 MHz, f_{ACLK} = 32768 Hz, Program executes in flash, BCSCTL1 = CALBC1_1MHZ, DCOCTL = CALDCO_1MHZ, CPUOFF = 0, SCG0 = 0, SCG1 = 0, OSCOFF = 0		2.2 V		270	390	µA
				3 V		390	550	
$I_{AM,1MHz}$	Active mode (AM) current (1 MHz)	$f_{DCO} = f_{MCLK} = f_{SMCLK}$ = 1 MHz, f_{ACLK} = 32768 Hz, Program executes in RAM, BCSCTL1 = CALBC1_1MHZ, DCOCTL = CALDCO_1MHZ, CPUOFF = 0, SCG0 = 0, SCG1 = 0, OSCOFF = 0		2.2 V		240		µA
				3.3 V		340		
$I_{AM,4kHz}$	Active mode (AM) current (4 kHz)	$f_{MCLK} = f_{SMCLK} = f_{ACLK}$ = 32768 Hz/8 = 4096 Hz, f_{DCO} = 0 Hz, Program executes in flash, SELMx = 11, SELS = 1, DIVMx = DIVSx = DIVAx = 11, CPUOFF = 0, SCG0 = 1, SCG1 = 0, OSCOFF = 0	-40°C to 85°C	2.2 V		5	9	µA
			105°C				18	
			-40°C to 85°C	3 V		6	10	
			105°C				20	
$I_{AM,100kHz}$	Active mode (AM) current (100 kHz)	$f_{MCLK} = f_{SMCLK} = f_{DCO(0, 0)}$ ≈ 100 kHz, f_{ACLK} = 0 Hz, Program executes in flash, RSELx = 0, DCOx = 0, CPUOFF = 0, SCG0 = 0, SCG1 = 0, OSCOFF = 1	-40°C to 85°C	2.2 V		60	85	µA
			105°C				95	
			-40°C to 85°C	3 V		72	95	
			105°C				105	

(1) All inputs are tied to 0 V or V_{CC} . Outputs do not source or sink any current.
(2) The currents are characterized with a Micro Crystal CC4V-T1A SMD crystal with a load capacitance of 9 pF. The internal and external load capacitance is chosen to closely match the required 9 pF.

Copyright © 2006–2012, Texas Instruments Incorporated

Typical Characteristics - Active-Mode Supply Current (Into DV_{CC} + AV_{CC})

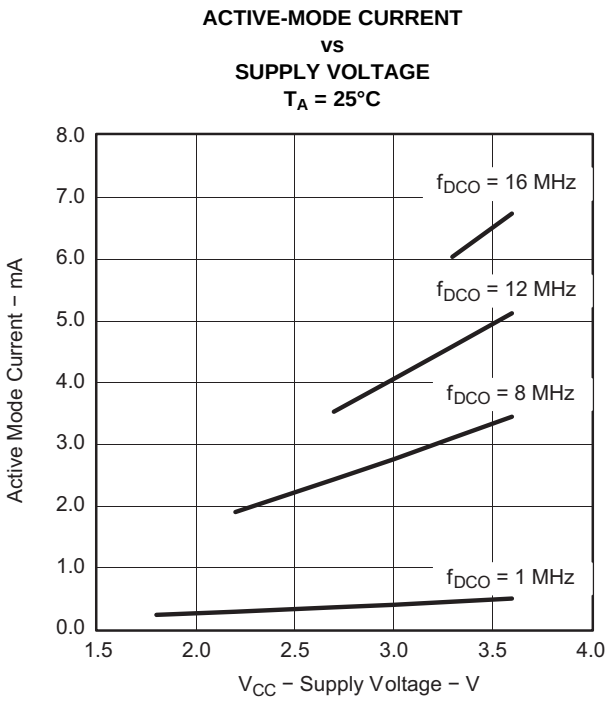

Figure 2.

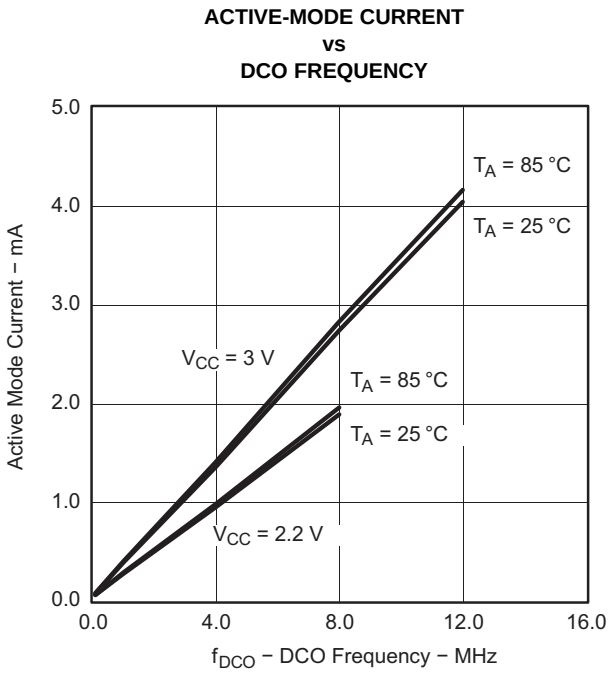

Figure 3.

Copyright © 2006–2012, Texas Instruments Incorporated

Low-Power-Mode Supply Currents (Into V_{CC}) Excluding External Current (1)(2)

over recommended ranges of supply voltage and operating free-air temperature (unless otherwise noted)

PARAMETER		TEST CONDITIONS	T_A	V_{CC}	MIN	TYP	MAX	UNIT
$I_{LPM0,1MHz}$	Low-power mode 0 (LPM0) current(3)	f_{MCLK} = 0 MHz, f_{SMCLK} = f_{DCO} = 1 MHz, f_{ACLK} = 32768 Hz, BCSCTL1 = CALBC1_1MHZ, DCOCTL = CALDCO_1MHZ, CPUOFF = 1, SCG0 = 0, SCG1 = 0, OSCOFF = 0		2.2 V		75	90	µA
				3 V		90	120	
$I_{LPM0,100kHz}$	Low-power mode 0 (LPM0) current(3)	f_{MCLK} = 0 MHz, f_{SMCLK} = $f_{DCO(0, 0)}$ ≈ 100 kHz, f_{ACLK} = 0 Hz, RSELx = 0, DCOx = 0, CPUOFF = 1, SCG0 = 0, SCG1 = 0, OSCOFF = 1		2.2 V		37	48	µA
				3 V		41	65	
I_{LPM2}	Low-power mode 2 (LPM2) current(4)	f_{MCLK} = f_{SMCLK} = 0 MHz, f_{DCO} = 1 MHz, f_{ACLK} = 32768 Hz, BCSCTL1 = CALBC1_1MHZ, DCOCTL = CALDCO_1MHZ, CPUOFF = 1, SCG0 = 0, SCG1 = 1, OSCOFF = 0	-40°C to 85°C	2.2 V		22	29	µA
			105°C				31	
			-40°C to 85°C	3 V		25	32	
			105°C				34	
$I_{LPM3,LFXT1}$	Low-power mode 3 (LPM3) current(4)	f_{DCO} = f_{MCLK} = f_{SMCLK} = 0 MHz, f_{ACLK} = 32768 Hz, CPUOFF = 1, SCG0 = 1, SCG1 = 1, OSCOFF = 0	-40°C	2.2 V		0.7	1.4	µA
			25°C			0.7	1.4	
			85°C			2.4	3.3	
			105°C			5	10	
			-40°C	3 V		0.9	1.5	
			25°C			0.9	1.5	
			85°C			2.6	3.8	
			105°C			6	12	
$I_{LPM3,VLO}$	Low-power mode 3 current, (LPM3)(4)	f_{DCO} = f_{MCLK} = f_{SMCLK} = 0 MHz, f_{ACLK} from internal LF oscillator (VLO), CPUOFF = 1, SCG0 = 1, SCG1 = 1, OSCOFF = 0	-40°C	2.2 V		0.4	1	µA
			25°C			0.5	1	
			85°C			1.8	2.9	
			105°C			4.5	9	
			-40°C	3 V		0.5	1.2	
			25°C			0.6	1.2	
			85°C			2.1	3.3	
			105°C			5.5	11	
I_{LPM4}	Low-power mode 4 (LPM4) current(5)	f_{DCO} = f_{MCLK} = f_{SMCLK} = 0 MHz, f_{ACLK} = 0 Hz, CPUOFF = 1, SCG0 = 1, SCG1 = 1, OSCOFF = 1	-40°C	2.2 V/ 3 V		0.1	0.5	µA
			25°C			0.1	0.5	
			85°C			1.5	3	
			105°C			4.5	9	

(1) All inputs are tied to 0 V or V_{CC} . Outputs do not source or sink any current.
(2) The currents are characterized with a Micro Crystal CC4V-T1A SMD crystal with a load capacitance of 9 pF. The internal and external load capacitance is chosen to closely match the required 9 pF.
(3) Current for brownout and WDT clocked by SMCLK included.
(4) Current for brownout and WDT clocked by ACLK included.
(5) Current for brownout included.

Copyright © 2006–2012, Texas Instruments Incorporated

Schmitt-Trigger Inputs (Ports P1, P2, P3, P4, and $\overline{RST}$/NMI)

over recommended ranges of supply voltage and operating free-air temperature (unless otherwise noted)

PARAMETER		TEST CONDITIONS	V_{CC}	MIN	TYP	MAX	UNIT
V_{IT+}	Positive-going input threshold voltage			0.45 V_{CC}		0.75 V_{CC}	V
			2.2 V	1		1.65	
			3 V	1.35		2.25	
V_{IT-}	Negative-going input threshold voltage			0.25 V_{CC}		0.55 V_{CC}	V
			2.2 V	0.55		1.20	
			3 V	0.75		1.65	
V_{hys}	Input voltage hysteresis (V_{IT+} - V_{IT-})		2.2 V	0.1		1	V
			3 V	0.3		1	
R_{Pull}	Pullup/pulldown resistor	For pullup: $V_{IN} = V_{SS}$, For pulldown: $V_{IN} = V_{CC}$	3 V	20	35	50	kΩ
C_I	Input capacitance	$V_{IN} = V_{SS}$ or V_{CC}			5		pF

Inputs (Ports P1, P2)

over recommended ranges of supply voltage and operating free-air temperature (unless otherwise noted)

PARAMETER		TEST CONDITIONS	V_{CC}	MIN	TYP	MAX	UNIT
$t_{(int)}$	External interrupt timing	Port P1, P2: P1.x to P2.x, External trigger pulse width to set interrupt flag(1)	2.2 V, 3 V	20			ns

(1) An external signal sets the interrupt flag every time the minimum interrupt pulse width $t_{(int)}$ is met. It may be set even with trigger signals shorter than $t_{(int)}$.

Leakage Current (Ports P1, P2, P3, and P4)

over recommended ranges of supply voltage and operating free-air temperature (unless otherwise noted)

PARAMETER		TEST CONDITIONS	V_{CC}	MIN	TYP	MAX	UNIT
$I_{lkg(Px.y)}$	High-impedance leakage current	(1) (2)	2.2 V, 3 V			±50	nA

(1) The leakage current is measured with V_{SS} or V_{CC} applied to the corresponding pin(s), unless otherwise noted.
(2) The leakage of the digital port pins is measured individually. The port pin is selected for input and the pullup/pulldown resistor is disabled.

Copyright © 2006–2012, Texas Instruments Incorporated

Outputs (Ports P1, P2, P3, and P4)

over recommended ranges of supply voltage and operating free-air temperature (unless otherwise noted)

PARAMETER		TEST CONDITIONS	V_{CC}	MIN	MAX	UNIT
V_{OH}	High-level output voltage	$I_{OH(max)}$ = -1.5 mA (1)	2.2 V	V_{CC} - 0.25	V_{CC}	V
		$I_{OH(max)}$ = -6 mA (2)		V_{CC} - 0.6	V_{CC}	
		$I_{OH(max)}$ = -1.5 mA(1)	3 V	V_{CC} - 0.25	V_{CC}	
		$I_{OH(max)}$ = -6 mA(2)		V_{CC} - 0.6	V_{CC}	
V_{OL}	Low-level output voltage	$I_{OL(max)}$ = 1.5 mA(1)	2.2 V	V_{SS}	V_{SS} + 0.25	V
		$I_{OL(max)}$ = 6 mA(2)		V_{SS}	V_{SS} + 0.6	
		$I_{OL(max)}$ = 1.5 mA(1)	3 V	V_{SS}	V_{SS} + 0.25	
		$I_{OL(max)}$ = 6 mA(2)		V_{SS}	V_{SS} + 0.6	

(1) The maximum total current, $I_{OH(max)}$ and $I_{OL(max)}$, for all outputs combined, should not exceed ±12 mA to hold the maximum voltage drop specified.
(2) The maximum total current, $I_{OH(max)}$ and $I_{OL(max)}$, for all outputs combined, should not exceed ±48 mA to hold the maximum voltage drop specified.

Output Frequency (Ports P1, P2, P3, and P4)

over recommended ranges of supply voltage and operating free-air temperature (unless otherwise noted)

PARAMETER		TEST CONDITIONS	V_{CC}	MIN	TYP	MAX	UNIT
$f_{Px.y}$	Port output frequency (with load)	P1.4/SMCLK, C_L = 20 pF, R_L = 1 kΩ against $V_{CC}/2$(1)(2)	2.2 V			10	MHz
			3 V			12	
f_{Port_CLK}	Clock output frequency	P2.0/ACLK, P1.4/SMCLK, C_L = 20 pF(2)	2.2 V			12	MHz
			3 V			16	

(1) Alternatively, a resistive divider with two 2-kΩ resistors between V_{CC} and V_{SS} is used as load. The output is connected to the center tap of the divider.
(2) The output voltage reaches at least 10% and 90% V_{CC} at the specified toggle frequency.

Copyright © 2006–2012, Texas Instruments Incorporated

Typical Characteristics - Outputs

One output loaded at a time.

TYPICAL LOW-LEVEL OUTPUT CURRENT vs LOW-LEVEL OUTPUT VOLTAGE

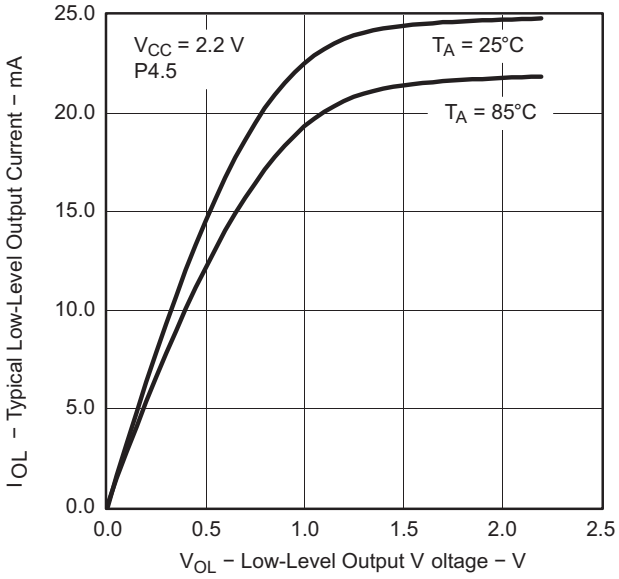

Figure 4.

TYPICAL LOW-LEVEL OUTPUT CURRENT vs LOW-LEVEL OUTPUT VOLTAGE

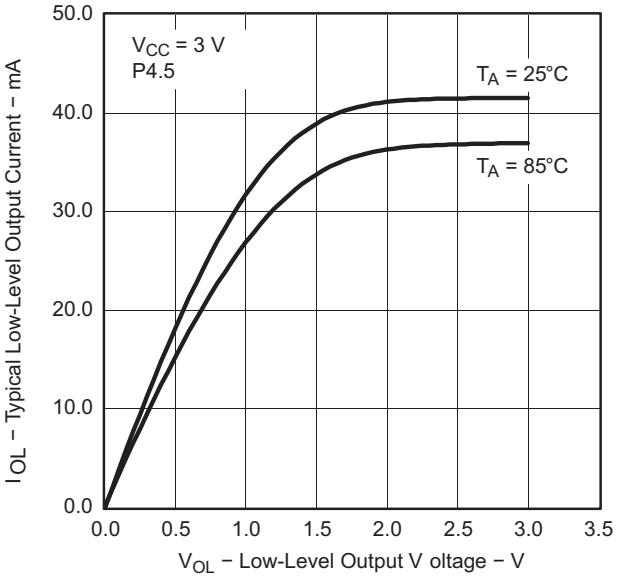

Figure 5.

TYPICAL HIGH-LEVEL OUTPUT CURRENT vs HIGH-LEVEL OUTPUT VOLTAGE

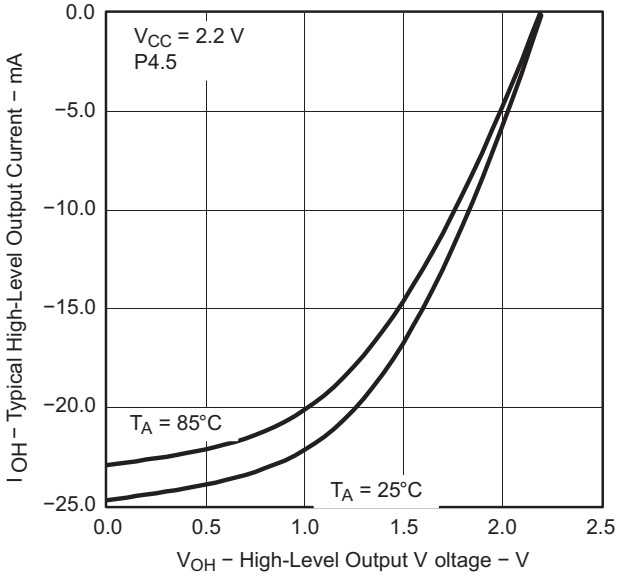

Figure 6.

TYPICAL HIGH-LEVEL OUTPUT CURRENT vs HIGH-LEVEL OUTPUT VOLTAGE

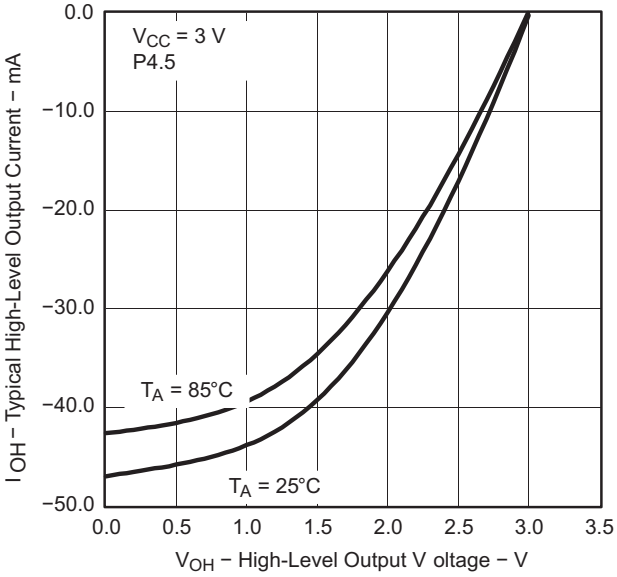

Figure 7.

Copyright © 2006–2012, Texas Instruments Incorporated

POR/Brownout Reset (BOR) (1) (2)

over recommended ranges of supply voltage and operating free-air temperature (unless otherwise noted)

PARAMETER		TEST CONDITIONS	V_{CC}	MIN	TYP	MAX	UNIT
$V_{CC(start)}$	See Figure 8	$dV_{CC}/dt \le 3$ V/s			0.7 × $V_{(B_IT-)}$		V
$V_{(B_IT-)}$	See Figure 8 through Figure 10	$dV_{CC}/dt \le 3$ V/s				1.71	V
$V_{hys(B_IT-)}$	See Figure 8	$dV_{CC}/dt \le 3$ V/s		70	130	210	mV
$t_{d(BOR)}$	See Figure 8					2000	µs
$t_{(reset)}$	Pulse length needed at $\overline{RST}$/NMI pin to accepted reset internally		3 V	2			µs

(1) The current consumption of the brownout module is already included in the I_{CC} current consumption data. The voltage level $V_{(B_IT-)}$ + $V_{hys(B_IT-)}$ is ≤ 1.8 V.

(2) During power up, the CPU begins code execution following a period of $t_{d(BOR)}$ after $V_{CC} = V_{(B_IT-)} + V_{hys(B_IT-)}$. The default DCO settings must not be changed until $V_{CC} \ge V_{CC(min)}$, where $V_{CC(min)}$ is the minimum supply voltage for the desired operating frequency.

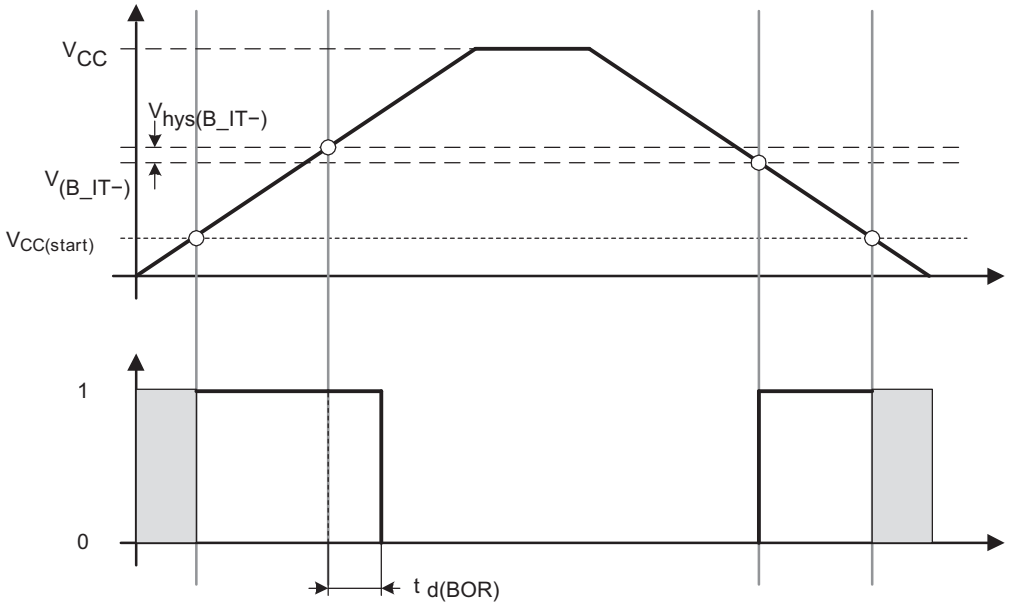

Figure 8. POR/Brownout Reset (BOR) vs Supply Voltage

Typical Characteristics - POR/Brownout Reset (BOR)

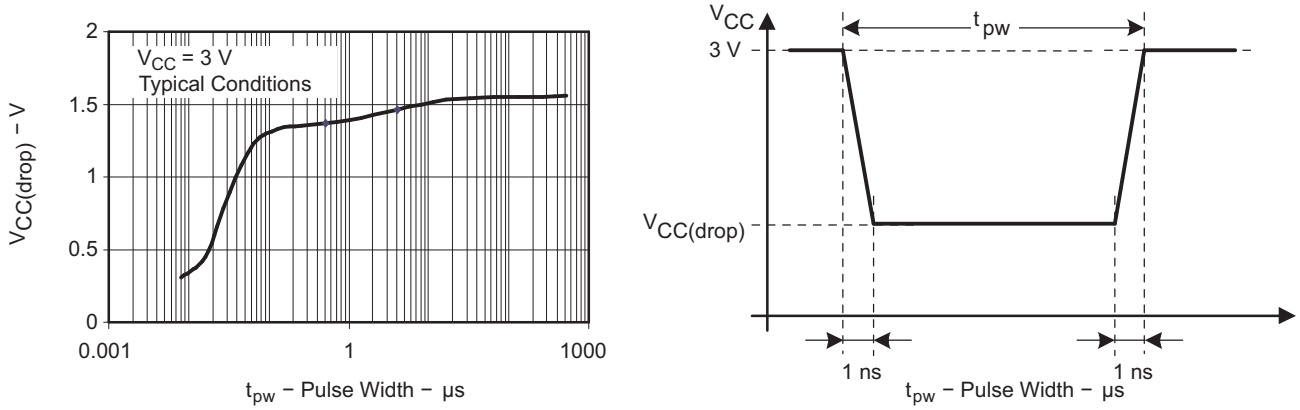

Figure 9. $V_{CC(drop)}$ Level With a Square Voltage Drop to Generate a POR/Brownout Signal

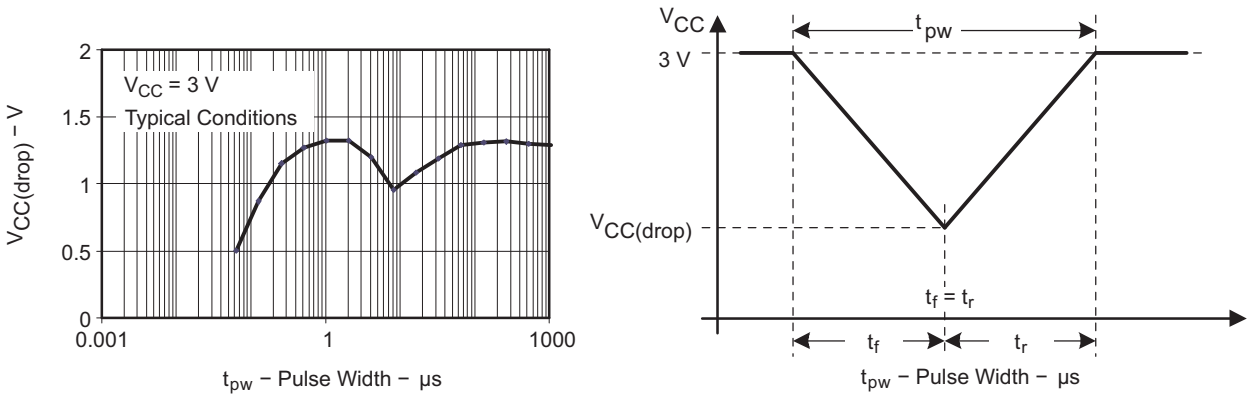

Figure 10. $V_{CC(drop)}$ Level With a Triangle Voltage Drop to Generate a POR/Brownout Signal

Copyright © 2006–2012, Texas Instruments Incorporated

Main DCO Characteristics

- All ranges selected by RSELx overlap with RSELx + 1: RSELx = 0 overlaps RSELx = 1, ... RSELx = 14 overlaps RSELx = 15.
- DCO control bits DCOx have a step size as defined by parameter S_{DCO} .
- Modulation control bits MODx select how often $f_{DCO(RSEL,DCO+1)}$ is used within the period of 32 DCOCLK cycles. The frequency $f_{DCO(RSEL,DCO)}$ is used for the remaining cycles. The frequency is an average equal to:

$$f_{average} = \frac{32 \times f_{DCO(RSEL,DCO)} \times f_{DCO(RSEL,DCO+1)}}{MOD \times f_{DCO(RSEL,DCO)} + (32 - MOD) \times f_{DCO(RSEL,DCO+1)}}$$

DCO Frequency

over recommended ranges of supply voltage and operating free-air temperature (unless otherwise noted)

PARAMETER		TEST CONDITIONS	V_{CC}	MIN	TYP	MAX	UNIT
V_{CC}	Supply voltage range	RSELx < 14		1.8		3.6	V
		RSELx = 14		2.2		3.6	
		RSELx = 15		3.0		3.6	
$f_{DCO(0,0)}$	DCO frequency (0, 0)	RSELx = 0, DCOx = 0, MODx = 0	2.2 V, 3 V	0.06		0.14	MHz
$f_{DCO(0,3)}$	DCO frequency (0, 3)	RSELx = 0, DCOx = 3, MODx = 0	2.2 V, 3 V	0.07		0.17	MHz
$f_{DCO(1,3)}$	DCO frequency (1, 3)	RSELx = 1, DCOx = 3, MODx = 0	2.2 V, 3 V	0.10		0.20	MHz
$f_{DCO(2,3)}$	DCO frequency (2, 3)	RSELx = 2, DCOx = 3, MODx = 0	2.2 V, 3 V	0.14		0.28	MHz
$f_{DCO(3,3)}$	DCO frequency (3, 3)	RSELx = 3, DCOx = 3, MODx = 0	2.2 V, 3 V	0.20		0.40	MHz
$f_{DCO(4,3)}$	DCO frequency (4, 3)	RSELx = 4, DCOx = 3, MODx = 0	2.2 V, 3 V	0.28		0.54	MHz
$f_{DCO(5,3)}$	DCO frequency (5, 3)	RSELx = 5, DCOx = 3, MODx = 0	2.2 V, 3 V	0.39		0.77	MHz
$f_{DCO(6,3)}$	DCO frequency (6, 3)	RSELx = 6, DCOx = 3, MODx = 0	2.2 V, 3 V	0.54		1.06	MHz
$f_{DCO(7,3)}$	DCO frequency (7, 3)	RSELx = 7, DCOx = 3, MODx = 0	2.2 V, 3 V	0.80		1.50	MHz
$f_{DCO(8,3)}$	DCO frequency (8, 3)	RSELx = 8, DCOx = 3, MODx = 0	2.2 V, 3 V	1.10		2.10	MHz
$f_{DCO(9,3)}$	DCO frequency (9, 3)	RSELx = 9, DCOx = 3, MODx = 0	2.2 V, 3 V	1.60		3.00	MHz
$f_{DCO(10,3)}$	DCO frequency (10, 3)	RSELx = 10, DCOx = 3, MODx = 0	2.2 V, 3 V	2.50		4.30	MHz
$f_{DCO(11,3)}$	DCO frequency (11, 3)	RSELx = 11, DCOx = 3, MODx = 0	2.2 V, 3 V	3.00		5.50	MHz
$f_{DCO(12,3)}$	DCO frequency (12, 3)	RSELx = 12, DCOx = 3, MODx = 0	2.2 V, 3 V	4.30		7.30	MHz
$f_{DCO(13,3)}$	DCO frequency (13, 3)	RSELx = 13, DCOx = 3, MODx = 0	2.2 V, 3 V	6.00		9.60	MHz
$f_{DCO(14,3)}$	DCO frequency (14, 3)	RSELx = 14, DCOx = 3, MODx = 0	2.2 V, 3 V	8.60		13.9	MHz
$f_{DCO(15,3)}$	DCO frequency (15, 3)	RSELx = 15, DCOx = 3, MODx = 0	3 V	12.0		18.5	MHz
$f_{DCO(15,7)}$	DCO frequency (15, 7)	RSELx = 15, DCOx = 7, MODx = 0	3 V	16.0		26.0	MHz
S_{RSEL}	Frequency step between range RSEL and RSEL+1	$S_{RSEL} = f_{DCO(RSEL+1,DCO)} / f_{DCO(RSEL,DCO)}$	2.2 V, 3 V			1.55	ratio
S_{DCO}	Frequency step between tap DCO and DCO+1	$S_{DCO} = f_{DCO(RSEL,DCO+1)} / f_{DCO(RSEL,DCO)}$	2.2 V, 3 V	1.05	1.08	1.12	ratio
	Duty cycle	Measured at P1.4/SMCLK	2.2 V, 3 V	40	50	60	%

Copyright © 2006–2012, Texas Instruments Incorporated

Calibrated DCO Frequencies - Tolerance at Calibration

over recommended ranges of supply voltage and operating free-air temperature (unless otherwise noted)

PARAMETER		TEST CONDITIONS	T_A	V_{CC}	MIN	TYP	MAX	UNIT
	Frequency tolerance at calibration		25°C	3 V	-1	±0.2	+1	%
$f_{CAL(1MHz)}$	1-MHz calibration value	BCSCTL1 = CALBC1_1MHZ, DCOCTL = CALDCO_1MHZ, Gating time: 5 ms	25°C	3 V	0.990	1	1.010	MHz
$f_{CAL(8MHz)}$	8-MHz calibration value	BCSCTL1 = CALBC1_8MHZ, DCOCTL = CALDCO_8MHZ, Gating time: 5 ms	25°C	3 V	7.920	8	8.080	MHz
$f_{CAL(12MHz)}$	12-MHz calibration value	BCSCTL1 = CALBC1_12MHZ, DCOCTL = CALDCO_12MHZ, Gating time: 5 ms	25°C	3 V	11.88	12	12.12	MHz
$f_{CAL(16MHz)}$	16-MHz calibration value	BCSCTL1 = CALBC1_16MHZ, DCOCTL = CALDCO_16MHZ, Gating time: 2 ms	25°C	3 V	15.84	16	16.16	MHz

Calibrated DCO Frequencies - Tolerance Over Temperature 0°C to 85°C

over recommended ranges of supply voltage and operating free-air temperature (unless otherwise noted)

PARAMETER		TEST CONDITIONS	T_A	V_{CC}	MIN	TYP	MAX	UNIT
	1-MHz tolerance over temperature		0°C to 85°C	3 V	-2.5	±0.5	+2.5	%
	8-MHz tolerance over temperature		0°C to 85°C	3 V	-2.5	±1.0	+2.5	%
	12-MHz tolerance over temperature		0°C to 85°C	3 V	-2.5	±1.0	+2.5	%
	16-MHz tolerance over temperature		0°C to 85°C	3 V	-3	±2.0	+3	%
$f_{CAL(1MHz)}$	1-MHz calibration value	BCSCTL1 = CALBC1_1MHZ, DCOCTL = CALDCO_1MHZ, Gating time: 5 ms	0°C to 85°C	2.2 V	0.97	1	1.03	MHz
				3 V	0.975	1	1.025	
				3.6 V	0.97	1	1.03	
$f_{CAL(8MHz)}$	8-MHz calibration value	BCSCTL1 = CALBC1_8MHZ, DCOCTL = CALDCO_8MHZ, Gating time: 5 ms	0°C to 85°C	2.2 V	7.76	8	8.4	MHz
				3 V	7.8	8	8.2	
				3.6 V	7.6	8	8.24	
$f_{CAL(12MHz)}$	12-MHz calibration value	BCSCTL1 = CALBC1_12MHZ, DCOCTL = CALDCO_12MHZ, Gating time: 5 ms	0°C to 85°C	2.2 V	11.7	12	12.3	MHz
				3 V	11.7	12	12.3	
				3.6 V	11.7	12	12.3	
$f_{CAL(16MHz)}$	16-MHz calibration value	BCSCTL1 = CALBC1_16MHZ, DCOCTL = CALDCO_16MHZ, Gating time: 2 ms	0°C to 85°C	3 V	15.52	16	16.48	MHz
				3.6 V	15	16	16.48	

Copyright © 2006–2012, Texas Instruments Incorporated

Calibrated DCO Frequencies - Tolerance Over Supply Voltage V_{CC}

over recommended ranges of supply voltage and operating free-air temperature (unless otherwise noted)

PARAMETER		TEST CONDITIONS	T_A	V_{CC}	MIN	TYP	MAX	UNIT
	1-MHz tolerance over V_{CC}		25°C	1.8 V to 3.6 V	-3	±2	+3	%
	8-MHz tolerance over V_{CC}		25°C	1.8 V to 3.6 V	-3	±2	+3	%
	12-MHz tolerance over V_{CC}		25°C	2.2 V to 3.6 V	-3	±2	+3	%
	16-MHz tolerance over V_{CC}		25°C	3 V to 3.6 V	-6	±2	+3	%
$f_{CAL(1MHz)}$	1-MHz calibration value	BCSCTL1 = CALBC1_1MHZ, DCOCTL = CALDCO_1MHZ, Gating time: 5 ms	25°C	1.8 V to 3.6 V	0.97	1	1.03	MHz
$f_{CAL(8MHz)}$	8-MHz calibration value	BCSCTL1 = CALBC1_8MHZ, DCOCTL = CALDCO_8MHZ, Gating time: 5 ms	25°C	1.8 V to 3.6 V	7.76	8	8.24	MHz
$f_{CAL(12MHz)}$	12-MHz calibration value	BCSCTL1 = CALBC1_12MHZ, DCOCTL = CALDCO_12MHZ, Gating time: 5 ms	25°C	2.2 V to 3.6 V	11.64	12	12.36	MHz
$f_{CAL(16MHz)}$	16-MHz calibration value	BCSCTL1 = CALBC1_16MHZ, DCOCTL = CALDCO_16MHZ, Gating time: 2 ms	25°C	3 V to 3.6 V	15	16	16.48	MHz

Calibrated DCO Frequencies - Overall Tolerance

over recommended ranges of supply voltage and operating free-air temperature (unless otherwise noted)

PARAMETER		TEST CONDITIONS	T_A	V_{CC}	MIN	TYP	MAX	UNIT
	1-MHz tolerance overall		I: -40°C to 85°C T: -40°C to 105°C	1.8 V to 3.6 V	-5	±2	+5	%
	8-MHz tolerance overall		I: -40°C to 85°C T: -40°C to 105°C	1.8 V to 3.6 V	-5	±2	+5	%
	12-MHz tolerance overall		I: -40°C to 85°C T: -40°C to 105°C	2.2 V to 3.6 V	-5	±2	+5	%
	16-MHz tolerance overall		I: -40°C to 85°C T: -40°C to 105°C	3 V to 3.6 V	-6	±3	+6	%
$f_{CAL(1MHz)}$	1-MHz calibration value	BCSCTL1 = CALBC1_1MHZ, DCOCTL = CALDCO_1MHZ, Gating time: 5 ms	I: -40°C to 85°C T: -40°C to 105°C	1.8 V to 3.6 V	0.95	1	1.05	MHz
$f_{CAL(8MHz)}$	8-MHz calibration value	BCSCTL1 = CALBC1_8MHZ, DCOCTL = CALDCO_8MHZ, Gating time: 5 ms	I: -40°C to 85°C T: -40°C to 105°C	1.8 V to 3.6 V	7.6	8	8.4	MHz
$f_{CAL(12MHz)}$	12-MHz calibration value	BCSCTL1 = CALBC1_12MHZ, DCOCTL = CALDCO_12MHZ, Gating time: 5 ms	I: -40°C to 85°C T: -40°C to 105°C	2.2 V to 3.6 V	11.4	12	12.6	MHz
$f_{CAL(16MHz)}$	16-MHz calibration value	BCSCTL1 = CALBC1_16MHZ, DCOCTL = CALDCO_16MHZ, Gating time: 2 ms	I: -40°C to 85°C T: -40°C to 105°C	3 V to 3.6 V	15	16	17	MHz

Copyright © 2006–2012, Texas Instruments Incorporated

Typical Characteristics - Calibrated 1-MHz DCO Frequency

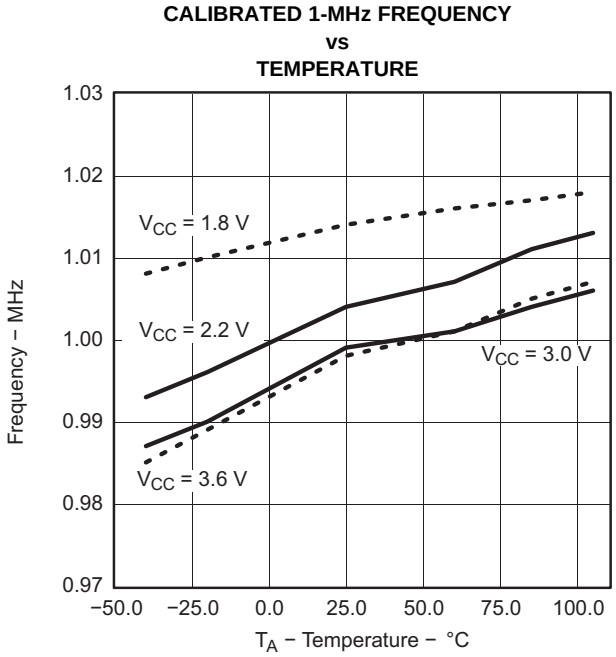

Figure 11.

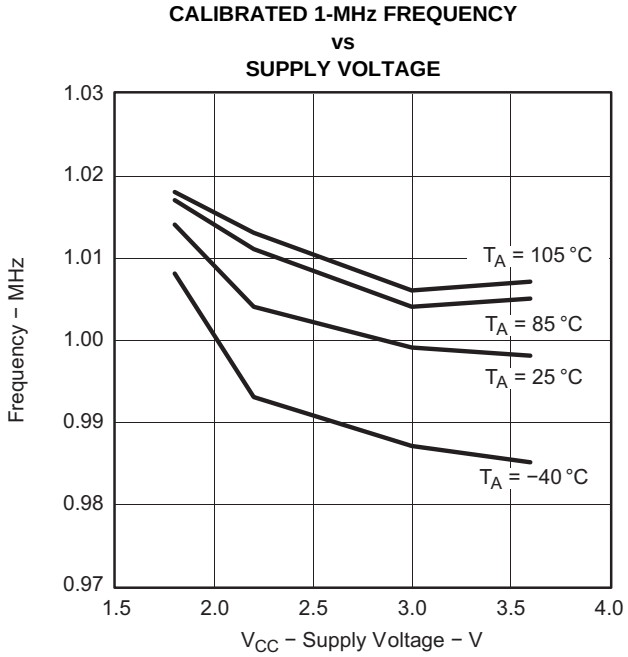

Figure 12.

Copyright © 2006–2012, Texas Instruments Incorporated

Wake-Up From Lower-Power Modes (LPM3/4)

over recommended ranges of supply voltage and operating free-air temperature (unless otherwise noted)

PARAMETER		TEST CONDITIONS	V_{CC}	MIN	TYP	MAX	UNIT
$t_{DCO,LPM3/4}$	DCO clock wake-up time from LPM3/4 (1)	BCSCTL1 = CALBC1_1MHZ, DCOCTL = CALDCO_1MHZ	2.2 V, 3 V			2	µs
		BCSCTL1 = CALBC1_8MHZ, DCOCTL = CALDCO_8MHZ				1.5	
		BCSCTL1 = CALBC1_12MHZ, DCOCTL = CALDCO_12MHZ				1	
		BCSCTL1 = CALBC1_16MHZ, DCOCTL = CALDCO_16MHZ	3 V			1	
$t_{CPU,LPM3/4}$	CPU wake-up time from LPM3/4 (2)				$1 / f_{MCLK} + t_{Clock,LPM3/4}$		

(1) The DCO clock wake-up time is measured from the edge of an external wake-up signal (for example, a port interrupt) to the first clock edge observable externally on a clock pin (MCLK or SMCLK).
(2) Parameter applicable only if DCOCLK is used for MCLK.

Typical Characteristics - DCO Clock Wake-Up Time From LPM3/4

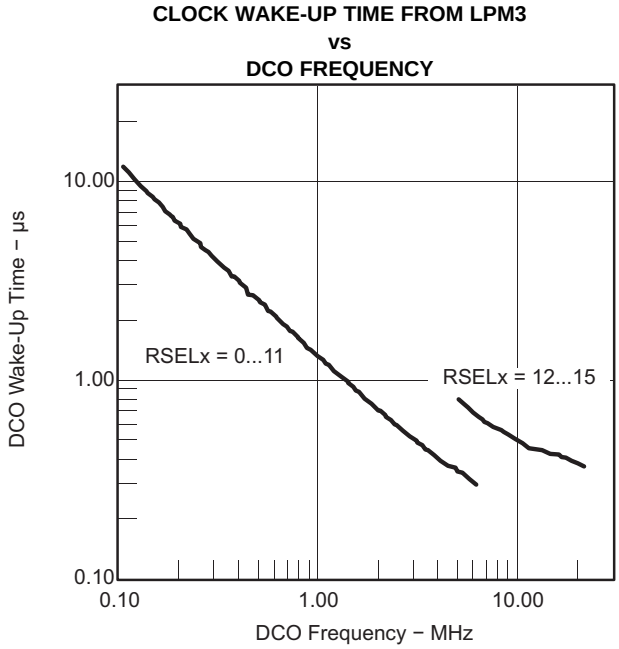

Figure 13.

DCO With External Resistor R_{OSC} (1)

over recommended ranges of supply voltage and operating free-air temperature (unless otherwise noted)

PARAMETER		TEST CONDITIONS	V_{CC}	MIN	TYP	MAX	UNIT
$f_{DCO,ROSC}$	DCO output frequency with R_{OSC}	DCOR = 1, RSELx = 4, DCOx = 3, MODx = 0, T_A = 25°C	2.2 V		1.8		MHz
			3 V		1.95		
D_T	Temperature drift	DCOR = 1, RSELx = 4, DCOx = 3, MODx = 0	2.2 V, 3 V		±0.1		%/°C
D_V	Drift with V_{CC}	DCOR = 1, RSELx = 4, DCOx = 3, MODx = 0	2.2 V, 3 V		10		%/V

(1) R_{OSC} = 100 kΩ. Metal film resistor, type 0257, 0.6 W with 1% tolerance and T_K = ±50 ppm/°C.

Typical Characteristics - DCO With External Resistor R_{OSC}

DCO FREQUENCY vs R_{OSC} V_{CC} = 2.2 V, T_A = 25°C

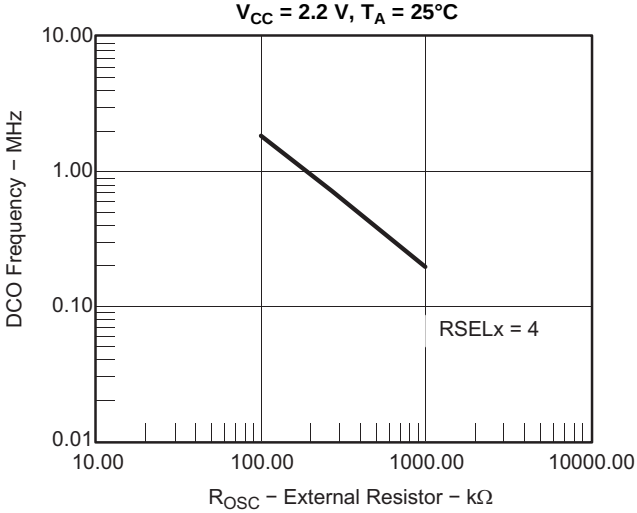

Figure 14.

DCO FREQUENCY vs R_{OSC} V_{CC} = 3 V, T_A = 25°C

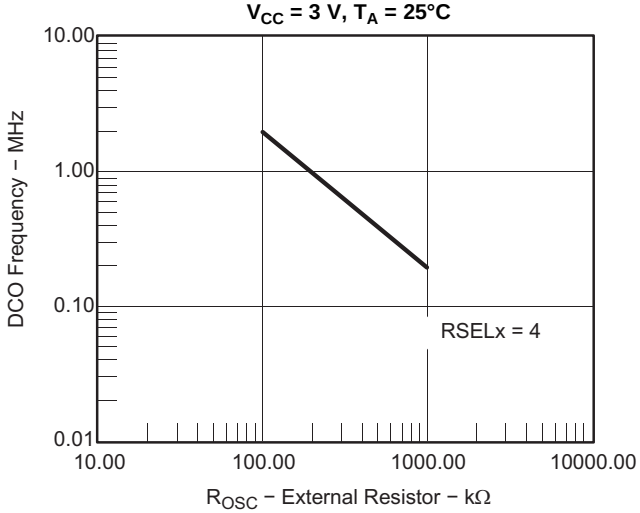

Figure 15.

DCO FREQUENCY vs TEMPERATURE V_{CC} = 3 V

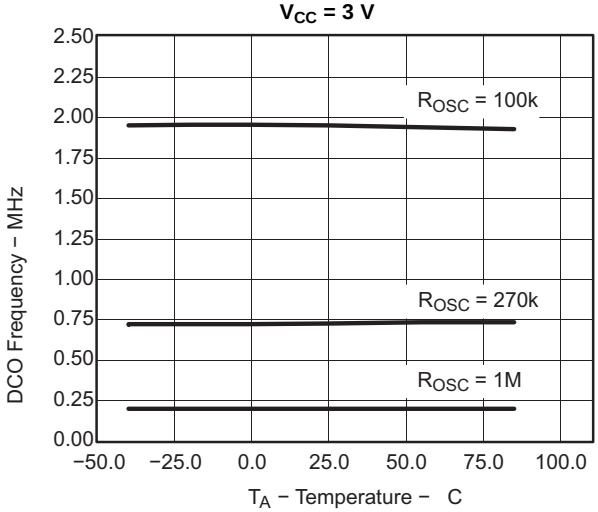

Figure 16.

DCO FREQUENCY vs SUPPLY VOLTAGE T_A = 25°C

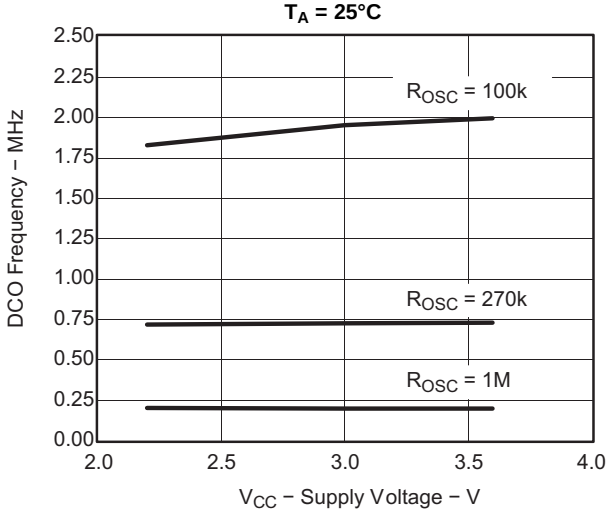

Figure 17.

Copyright © 2006–2012, Texas Instruments Incorporated

Crystal Oscillator LFXT1, Low-Frequency Mode[1]

over recommended ranges of supply voltage and operating free-air temperature (unless otherwise noted)

PARAMETER		TEST CONDITIONS	V_{CC}	MIN	TYP	MAX	UNIT
$f_{LFXT1,LF}$	LFXT1 oscillator crystal frequency, LF mode 0, 1	XTS = 0, LFXT1Sx = 0 or 1	1.8 V to 3.6 V		32768		Hz
$f_{LFXT1,LF,logic}$	LFXT1 oscillator logic level square wave input frequency, LF mode	XTS = 0, LFXT1Sx = 3	1.8 V to 3.6 V	10000	32768	50000	Hz
OA_{LF}	Oscillation allowance for LF crystals	XTS = 0, LFXT1Sx = 0, $f_{LFXT1,LF}$ = 32768 Hz, $C_{L,eff}$ = 6 pF			500		kΩ
		XTS = 0, LFXT1Sx = 0, $f_{LFXT1,LF}$ = 32768 Hz, $C_{L,eff}$ = 12 pF			200		
$C_{L,eff}$	Integrated effective load capacitance, LF mode[2]	XTS = 0, XCAPx = 0			1		pF
		XTS = 0, XCAPx = 1			5.5		
		XTS = 0, XCAPx = 2			8.5		
		XTS = 0, XCAPx = 3			11		
	Duty cycle, LF mode	XTS = 0, Measured at P2.0/ACLK, $f_{LFXT1,LF}$ = 32768 Hz	2.2 V, 3 V	30	50	70	%
$f_{Fault,LF}$	Oscillator fault frequency, LF mode[3]	XTS = 0, LFXT1Sx = 3[4]	2.2 V, 3 V	10		10000	Hz

(1) To improve EMI on the XT1 oscillator, the following guidelines should be observed.
(a) Keep the trace between the device and the crystal as short as possible.
(b) Design a good ground plane around the oscillator pins.
(c) Prevent crosstalk from other clock or data lines into oscillator pins XIN and XOUT.
(d) Avoid running PCB traces underneath or adjacent to the XIN and XOUT pins.
(e) Use assembly materials and praxis to avoid any parasitic load on the oscillator XIN and XOUT pins.
(f) If conformal coating is used, ensure that it does not induce capacitive or resistive leakage between the oscillator pins.
(g) Do not route the XOUT line to the JTAG header to support the serial programming adapter as shown in other documentation. This signal is no longer required for the serial programming adapter.
(2) Includes parasitic bond and package capacitance (approximately 2 pF per pin).
Because the PCB adds additional capacitance, it is recommended to verify the correct load by measuring the ACLK frequency. For a correct setup, the effective load capacitance should always match the specification of the crystal that is used.
(3) Frequencies below the MIN specification set the fault flag. Frequencies above the MAX specification do not set the fault flag. Frequencies in between might set the flag.
(4) Measured with logic-level input frequency but also applies to operation with crystals.

Internal Very-Low-Power Low-Frequency Oscillator (VLO)

over recommended ranges of supply voltage and operating free-air temperature (unless otherwise noted)

PARAMETER		T_A	V_{CC}	MIN	TYP	MAX	UNIT
f_{VLO}	VLO frequency	-40°C to 85°C	2.2 V, 3 V	4	12	20	kHz
		105°C				22	
df_{VLO}/dT	VLO frequency temperature drift [1]	I: -40°C to 85°C T: -40°C to 105°C	2.2 V, 3 V		0.5		%/°C
df_{VLO}/dV_{CC}	VLO frequency supply voltage drift [2]	25°C	1.8 V to 3.6 V		4		%/V

(1) Calculated using the box method:
I version: [MAX(-40...85°C) - MIN(-40...85°C)]/MIN(-40...85°C)/[85°C - (-40°C)]
T version: [MAX(-40...105°C) - MIN(-40...105°C)]/MIN(-40...105°C)/[105°C - (-40°C)]
(2) Calculated using the box method: [MAX(1.8...3.6 V) - MIN(1.8...3.6 V)]/MIN(1.8...3.6 V)/(3.6 V - 1.8 V)

Copyright © 2006–2012, Texas Instruments Incorporated

Crystal Oscillator LFXT1, High-Frequency Mode[1]

PARAMETER		TEST CONDITIONS	V_{CC}	MIN	TYP	MAX	UNIT
$f_{LFXT1,HF0}$	LFXT1 oscillator crystal frequency, HF mode 0	XTS = 1, LFXT1Sx = 0	1.8 V to 3.6 V	0.4		1	MHz
$f_{LFXT1,HF1}$	LFXT1 oscillator crystal frequency, HF mode 1	XTS = 1, LFXT1Sx = 1	1.8 V to 3.6 V	1		4	MHz
$f_{LFXT1,HF2}$	LFXT1 oscillator crystal frequency, HF mode 2	XTS = 1, LFXT1Sx = 2	1.8 V to 3.6 V	2		10	MHz
			2.2 V to 3.6 V	2		12	
			3 V to 3.6 V	2		16	
$f_{LFXT1,HF,logic}$	LFXT1 oscillator logic-level square-wave input frequency, HF mode	XTS = 1, LFXT1Sx = 3	1.8 V to 3.6 V	0.4		10	MHz
			2.2 V to 3.6 V	0.4		12	
			3 V to 3.6 V	0.4		16	
OA_{HF}	Oscillation allowance for HF crystals (see Figure 18 and Figure 19)	XTS = 1, LFXT1Sx = 0, $f_{LFXT1,HF}$ = 1 MHz, $C_{L,eff}$ = 15 pF			2700		Ω
		XTS = 1, LFXT1Sx = 1, $f_{LFXT1,HF}$ = 4 MHz, $C_{L,eff}$ = 15 pF			800		
		XTS = 1, LFXT1Sx = 2, $f_{LFXT1,HF}$ = 16 MHz, $C_{L,eff}$ = 15 pF			300		
$C_{L,eff}$	Integrated effective load capacitance, HF mode[2]	XTS = 1[3]			1		pF
	Duty cycle, HF mode	XTS = 1, Measured at P2.0/ACLK, $f_{LFXT1,HF}$ = 10 MHz	2.2 V, 3 V	40	50	60	%
		XTS = 1, Measured at P2.0/ACLK, $f_{LFXT1,HF}$ = 16 MHz		40	50	60	
$f_{Fault,HF}$	Oscillator fault frequency[4]	XTS = 1, LFXT1Sx = 3[5]	2.2 V, 3 V	30		300	kHz

(1) To improve EMI on the XT1 oscillator the following guidelines should be observed:
(a) Keep the trace between the device and the crystal as short as possible.
(b) Design a good ground plane around the oscillator pins.
(c) Prevent crosstalk from other clock or data lines into oscillator pins XIN and XOUT.
(d) Avoid running PCB traces underneath or adjacent to the XIN and XOUT pins.
(e) Use assembly materials and praxis to avoid any parasitic load on the oscillator XIN and XOUT pins.
(f) If conformal coating is used, ensure that it does not induce capacitive or resistive leakage between the oscillator pins.
(g) Do not route the XOUT line to the JTAG header to support the serial programming adapter as shown in other documentation. This signal is no longer required for the serial programming adapter.

(2) Includes parasitic bond and package capacitance (approximately 2 pF per pin). Because the PCB adds additional capacitance, it is recommended to verify the correct load by measuring the ACLK frequency. For a correct setup, the effective load capacitance should always match the specification of the used crystal.

(3) Requires external capacitors at both terminals. Values are specified by crystal manufacturers.

(4) Frequencies below the MIN specification set the fault flag, frequencies above the MAX specification do not set the fault flag, and frequencies in between might set the flag.

(5) Measured with logic-level input frequency, but also applies to operation with crystals.

Copyright © 2006–2012, Texas Instruments Incorporated

Typical Characteristics - LFXT1 Oscillator in HF Mode (XTS = 1)

OSCILLATION ALLOWANCE vs CRYSTAL FREQUENCY
$C_{L,eff}$ = 15 pF, T_A = 25°C

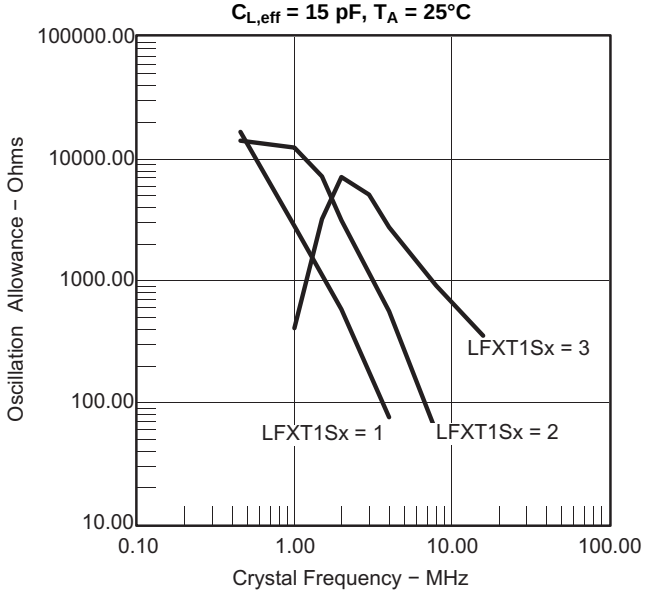

Figure 18.

OSCILLATOR SUPPLY CURRENT vs CRYSTAL FREQUENCY
$C_{L,eff}$ = 15 pF, T_A = 25°C

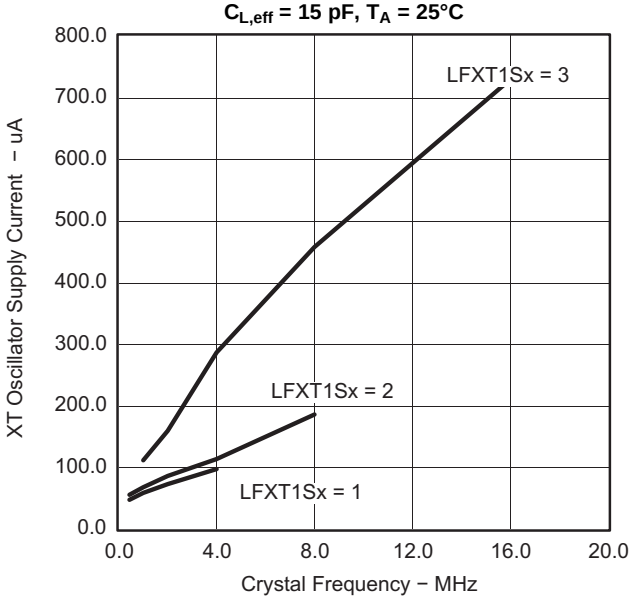

Figure 19.

Timer_A

over recommended ranges of supply voltage and operating free-air temperature (unless otherwise noted)

PARAMETER		TEST CONDITIONS	V_{CC}	MIN	TYP	MAX	UNIT
f_{TA}	Timer_A clock frequency	Internal: SMCLK, ACLK External: TACLK, INCLK Duty cycle = 50% ± 10%	2.2 V			10	MHz
			3 V			16	
$t_{TA,cap}$	Timer_A capture timing	TA0, TA1, TA2	2.2 V, 3 V	20			ns

Timer_B

over recommended ranges of supply voltage and operating free-air temperature (unless otherwise noted)

PARAMETER		TEST CONDITIONS	V_{CC}	MIN	TYP	MAX	UNIT
f_{TB}	Timer_B clock frequency	Internal: SMCLK, ACLK External: TACLK, INCLK Duty cycle = 50% ± 10%	2.2 V			10	MHz
			3 V			16	
$t_{TB,cap}$	Timer_B capture timing	TB0, TB1, TB2	2.2 V, 3 V	20			ns

Copyright © 2006–2012, Texas Instruments Incorporated

USCI (UART Mode)

over recommended ranges of supply voltage and operating free-air temperature (unless otherwise noted)

PARAMETER		CONDITIONS	V_{CC}	MIN	TYP	MAX	UNIT
f_{USCI}	USCI input clock frequency	Internal: SMCLK, ACLK External: UCLK Duty cycle = 50% ± 10%				f_{SYSTEM}	MHz
f_{BITCLK}	BITCLK clock frequency (equals baud rate in MBaud)		2.2 V, 3 V			1	MHz
t_τ	UART receive deglitch time(1)		2.2 V	50	150	600	ns
			3 V	50	100	600	

(1) Pulses on the UART receive input (UCxRX) shorter than the UART receive deglitch time are suppressed. To ensure that pulses are correctly recognized their width should exceed the maximum specification of the deglitch time.

USCI (SPI Master Mode)(1)

over recommended ranges of supply voltage and operating free-air temperature (unless otherwise noted)
(see Figure 20 and Figure 21)

PARAMETER		TEST CONDITIONS	V_{CC}	MIN	TYP	MAX	UNIT
f_{USCI}	USCI input clock frequency	SMCLK, ACLK Duty cycle = 50% ± 10%				f_{SYSTEM}	MHz
$t_{SU,MI}$	SOMI input data setup time		2.2 V	110			ns
			3 V	75			
$t_{HD,MI}$	SOMI input data hold time		2.2 V	0			ns
			3 V	0			
$t_{VALID,MO}$	SIMO output data valid time	UCLK edge to SIMO valid, C_L = 20 pF	2.2 V			30	ns
			3 V			20	

(1) $f_{UCxCLK} = 1/2t_{LO/HI}$ with $t_{LO/HI} \geq \max(t_{VALID,MO(USCI)} + t_{SU,SI(Slave)}, t_{SU,MI(USCI)} + t_{VALID,SO(Slave)})$.
For the slave's parameters $t_{SU,SI(Slave)}$ and $t_{VALID,SO(Slave)}$, see the SPI parameters of the attached slave.

USCI (SPI Slave Mode)(1)

over recommended ranges of supply voltage and operating free-air temperature (unless otherwise noted)
(see Figure 22 and Figure 23)

PARAMETER		TEST CONDITIONS	V_{CC}	MIN	TYP	MAX	UNIT
$t_{STE,LEAD}$	STE lead time, STE low to clock		2.2 V, 3 V		50		ns
$t_{STE,LAG}$	STE lag time, Last clock to STE high		2.2 V, 3 V	10			ns
$t_{STE,ACC}$	STE access time, STE low to SOMI data out		2.2 V, 3 V		50		ns
$t_{STE,DIS}$	STE disable time, STE high to SOMI high impedance		2.2 V, 3 V		50		ns
$t_{SU,SI}$	SIMO input data setup time		2.2 V	20			ns
			3 V	15			
$t_{HD,SI}$	SIMO input data hold time		2.2 V	10			ns
			3 V	10			
$t_{VALID,SO}$	SOMI output data valid time	UCLK edge to SOMI valid, C_L = 20 pF	2.2 V		75	110	ns
			3 V		50	75	

(1) $f_{UCxCLK} = 1/2t_{LO/HI}$ with $t_{LO/HI} \geq \max(t_{VALID,MO(Master)} + t_{SU,SI(USCI)}, t_{SU,MI(Master)} + t_{VALID,SO(USCI)})$.
For the master's parameters $t_{SU,MI(Master)}$ and $t_{VALID,MO(Master)}$ refer to the SPI parameters of the attached slave.

Copyright © 2006–2012, Texas Instruments Incorporated

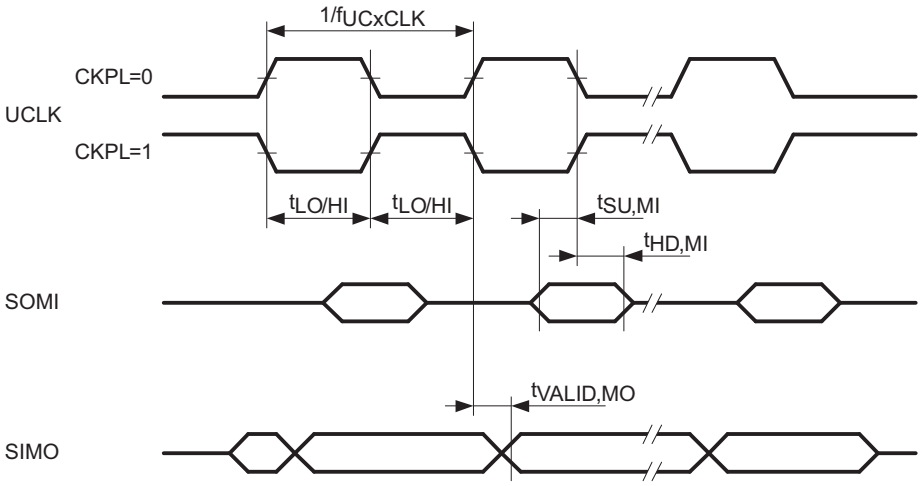

Figure 20. SPI Master Mode, CKPH = 0

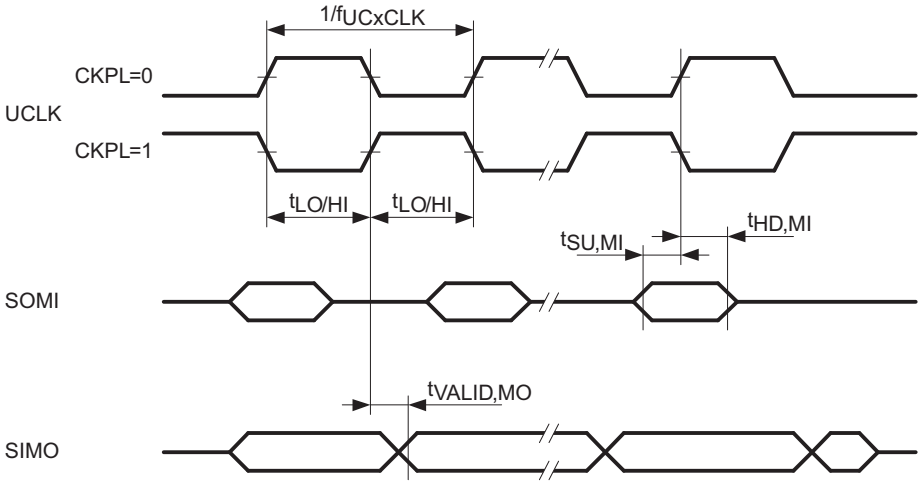

Figure 21. SPI Master Mode, CKPH = 1

Copyright © 2006–2012, Texas Instruments Incorporated

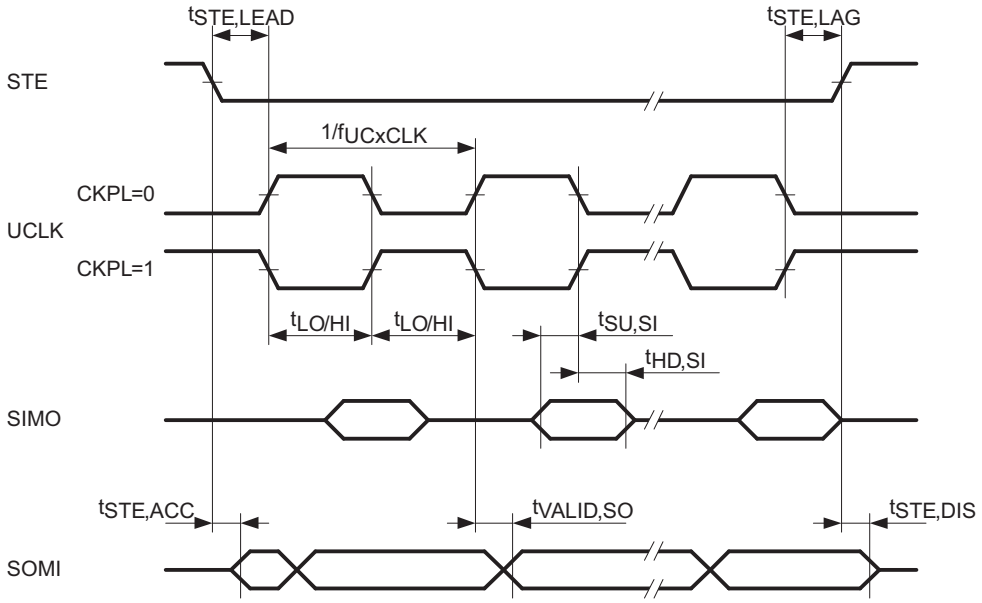

Figure 22. SPI Slave Mode, CKPH = 0

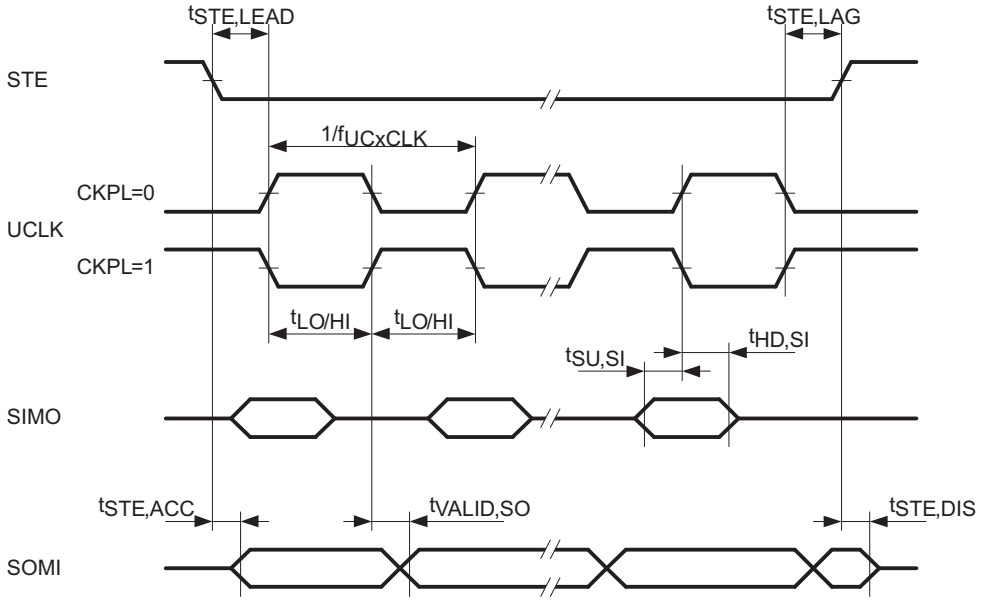

Figure 23. SPI Slave Mode, CKPH = 1

Copyright © 2006–2012, Texas Instruments Incorporated

USCI (I2C Mode)

over recommended ranges of supply voltage and operating free-air temperature (unless otherwise noted) (see Figure 24)

PARAMETER		TEST CONDITIONS	V_{CC}	MIN	TYP	MAX	UNIT
f_{USCI}	USCI input clock frequency	Internal: SMCLK, ACLK External: UCLK Duty cycle = 50% ± 10%				f_{SYSTEM}	MHz
f_{SCL}	SCL clock frequency		2.2 V, 3 V	0		400	kHz
$t_{HD,STA}$	Hold time (repeated) START	f_{SCL} ≤ 100 kHz	2.2 V, 3 V	4			µs
		f_{SCL} > 100 kHz		0.6			
$t_{SU,STA}$	Setup time for a repeated START	f_{SCL} ≤ 100 kHz	2.2 V, 3 V	4.7			µs
		f_{SCL} > 100 kHz		0.6			
$t_{HD,DAT}$	Data hold time		2.2 V, 3 V	0			ns
$t_{SU,DAT}$	Data setup time		2.2 V, 3 V	250			ns
$t_{SU,STO}$	Setup time for STOP		2.2 V, 3 V	4			µs
t_{SP}	Pulse width of spikes suppressed by input filter		2.2 V	50	150	600	ns
			3 V	50	100	600	

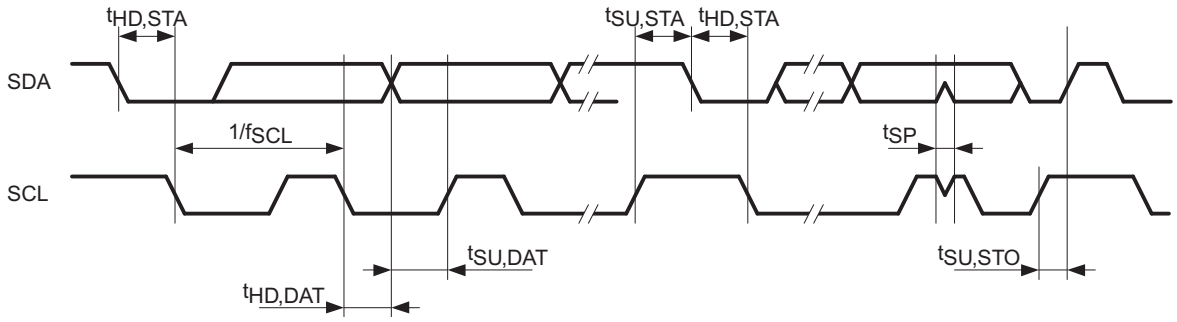

Figure 24. I2C Mode Timing

Copyright © 2006–2012, Texas Instruments Incorporated

10-Bit ADC, Power Supply and Input Range Conditions[1]

over recommended ranges of supply voltage and operating free-air temperature (unless otherwise noted)[1]

PARAMETER		TEST CONDITIONS	T_A	V_{CC}	MIN	TYP	MAX	UNIT
V_{CC}	Analog supply voltage range	V_{SS} = 0 V			2.2		3.6	V
V_{Ax}	Analog input voltage range[2]	All Ax terminals, Analog inputs selected in ADC10AE register			0		V_{CC}	V
I_{ADC10}	ADC10 supply current[3]	$f_{ADC10CLK}$ = 5 MHz, ADC10ON = 1, REFON = 0, ADC10SHT0 = 1, ADC10SHT1 = 0, ADC10DIV = 0	I: -40°C to 85°C T: -40°C to 105°C	2.2 V		0.52	1.05	mA
				3 V		0.6	1.2	
I_{REF+}	Reference supply current, reference buffer disabled[4]	$f_{ADC10CLK}$ = 5 MHz, ADC10ON = 0, REF2_5V = 0, REFON = 1, REFOUT = 0	I: -40°C to 85°C T: -40°C to 105°C	2.2 V, 3 V		0.25	0.4	mA
		$f_{ADC10CLK}$ = 5 MHz, ADC10ON = 0, REF2_5V = 1, REFON = 1, REFOUT = 0		3 V		0.25	0.4	
$I_{REFB,0}$	Reference buffer supply current with ADC10SR = 0[4]	$f_{ADC10CLK}$ = 5 MHz ADC10ON = 0, REFON = 1, REF2_5V = 0, REFOUT = 1, ADC10SR = 0	-40°C to 85°C	2.2 V, 3 V		1.1	1.4	mA
			105°C	2.2 V, 3 V			1.8	
$I_{REFB,1}$	Reference buffer supply current with ADC10SR = 1[4]	$f_{ADC10CLK}$ = 5 MHz, ADC10ON = 0, REFON = 1, REF2_5V = 0, REFOUT = 1, ADC10SR = 1	-40°C to 85°C	2.2 V, 3 V		0.5	0.7	mA
			105°C	2.2 V, 3 V			0.8	
C_I	Input capacitance	Only one terminal Ax selected at a time	I: -40°C to 85°C T: -40°C to 105°C				27	pF
R_I	Input MUX ON resistance	0 V ≤ V_{Ax} ≤ V_{CC}	I: -40°C to 85°C T: -40°C to 105°C	2.2 V, 3 V			2000	Ω

(1) The leakage current is defined in the leakage current table with Px.x/Ax parameter.
(2) The analog input voltage range must be within the selected reference voltage range V_{R+} to V_{R-} for valid conversion results.
(3) The internal reference supply current is not included in current consumption parameter I_{ADC10}.
(4) The internal reference current is supplied via terminal V_{CC}. Consumption is independent of the ADC10ON control bit, unless a conversion is active. The REFON bit enables the built-in reference to settle before starting an A/D conversion.

Copyright © 2006–2012, Texas Instruments Incorporated

10-Bit ADC, Built-In Voltage Reference

over recommended ranges of supply voltage and operating free-air temperature (unless otherwise noted)

PARAMETER		TEST CONDITIONS		V_{CC}	MIN	TYP	MAX	UNIT
$V_{CC,REF+}$	Positive built-in reference analog supply voltage range	I_{VREF+} ≤ 1 mA, REF2_5V = 0			2.2			V
		I_{VREF+} ≤ 0.5 mA, REF2_5V = 1			2.8			
		I_{VREF+} ≤ 1 mA, REF2_5V = 1			2.9			
V_{REF+}	Positive built-in reference voltage	I_{VREF+} ≤ I_{VREF+}max, REF2_5V = 0		2.2 V, 3 V	1.41	1.5	1.59	V
		I_{VREF+} ≤ I_{VREF+}max, REF2_5V = 1		3 V	2.35	2.5	2.65	
$I_{LD,VREF+}$	Maximum V_{REF+} load current			2.2 V			±0.5	mA
				3 V			±1	
	V_{REF+} load regulation	I_{VREF+} = 500 µA ± 100 µA, Analog input voltage V_{Ax} ≈ 0.75 V, REF2_5V = 0		2.2 V, 3 V			±2	LSB
		I_{VREF+} = 500 µA ± 100 µA, Analog input voltage V_{Ax} ≈ 1.25 V, REF2_5V = 1		3 V			±2	
	V_{REF+} load regulation response time	I_{VREF+} = 100 µA to 900 µA, V_{Ax} ≈ 0.5 x V_{REF+}, Error of conversion result ≤1 LSB	ADC10SR = 0	3 V			400	ns
			ADC10SR = 1				2000	
C_{VREF+}	Maximum capacitance at pin V_{REF+} (1)	I_{VREF+} ≤ ±1 mA, REFON = 1, REFOUT = 1		2.2 V, 3 V			100	pF
T_{CREF+}	Temperature coefficient (2)	I_{VREF+} = constant with 0 mA ≤ I_{VREF+} ≤ 1 mA		2.2 V, 3 V			±100	ppm/°C
t_{REFON}	Settling time of internal reference voltage (3)	I_{VREF+} = 0.5 mA, REF2_5V = 0, REFON = 0 to 1		3.6 V			30	µs
$t_{REFBURST}$	Settling time of reference buffer (3)	I_{VREF+} = 0.5 mA, REF2_5V = 0, REFON = 1, REFBURST = 1	ADC10SR = 0	2.2 V			1	µs
			ADC10SR = 1				2.5	
		I_{VREF+} = 0.5 mA, REF2_5V = 1, REFON = 1, REFBURST = 1	ADC10SR = 0	3 V			2	
			ADC10SR = 1				4.5	

(1) The capacitance applied to the internal buffer operational amplifier, if switched to terminal P2.4/TA 2/A4/V_{REF+}/ V_{eREF+} (REFOUT = 1), must be limited; the reference buffer may become unstable otherwise.
(2) Calculated using the box method:
I temperature: (MAX(-40 to 85°C) – MIN(-40 to 85°C)) / MIN(-40 to 85°C) / (85°C – (–40°C))
T temperature: (MAX(-40 to 105°C) – MIN(-40 to 105°C)) / MIN(-40 to 105°C) / (105°C – (–40°C))
(3) The condition is that the error in a conversion started after t_{REFON} or t_{RefBuf} is less than ±0.5 LSB.

Copyright © 2006–2012, Texas Instruments Incorporated

10-Bit ADC, External Reference[1]

over recommended ranges of supply voltage and operating free-air temperature (unless otherwise noted)

PARAMETER		TEST CONDITIONS	V_{CC}	MIN	MAX	UNIT
V_{eREF+}	Positive external reference input voltage range[2]	$V_{eREF+} > V_{eREF-}$, SREF1 = 1, SREF0 = 0		1.4	V_{CC}	V
		$V_{eREF-} \leq V_{eREF+} \leq V_{CC}$ - 0.15 V, SREF1 = 1, SREF0 = 1[3]		1.4	3	
V_{eREF-}	Negative external reference input voltage range[4]	$V_{eREF+} > V_{eREF-}$		0	1.2	V
ΔV_{eREF}	Differential external reference input voltage range $\Delta V_{eREF} = V_{eREF+} - V_{eREF-}$	$V_{eREF+} > V_{eREF-}$[5]		1.4	V_{CC}	V
I_{VeREF+}	Static input current into V_{eREF+}	$0 V \leq V_{eREF+} \leq V_{CC}$, SREF1 = 1, SREF0 = 0	2.2 V, 3 V		±1	µA
		$0 V \leq V_{eREF+} \leq V_{CC}$ - 0.15 V ≤ 3 V, SREF1 = 1, SREF0 = 1[3]			0	
I_{VeREF-}	Static input current into V_{eREF-}	$0 V \leq V_{eREF-} \leq V_{CC}$	2.2 V, 3 V		±1	µA

(1) The external reference is used during conversion to charge and discharge the capacitance array. The input capacitance, CI, is also the dynamic load for an external reference during conversion. The dynamic impedance of the reference supply should follow the recommendations on analog-source impedance to allow the charge to settle for 10-bit accuracy.
(2) The accuracy limits the minimum positive external reference voltage. Lower reference voltage levels may be applied with reduced accuracy requirements.
(3) Under this condition, the external reference is internally buffered. The reference buffer is active and requires the reference buffer supply current I_{REFB}. The current consumption can be limited to the sample and conversion period with REBURST = 1.
(4) The accuracy limits the maximum negative external reference voltage. Higher reference voltage levels may be applied with reduced accuracy requirements.
(5) The accuracy limits the minimum external differential reference voltage. Lower differential reference voltage levels may be applied with reduced accuracy requirements.

10-Bit ADC, Timing Parameters

over recommended ranges of supply voltage and operating free-air temperature (unless otherwise noted)

PARAMETER		TEST CONDITIONS		V_{CC}	MIN	TYP	MAX	UNIT
$f_{ADC10CLK}$	ADC10 input clock frequency	For specified performance of ADC10 linearity parameters	ADC10SR = 0	2.2 V, 3 V	0.45		6.3	MHz
			ADC10SR = 1		0.45		1.5	
$f_{ADC10OSC}$	ADC10 built-in oscillator frequency	ADC10DIVx = 0, ADC10SSELx = 0, $f_{ADC10CLK} = f_{ADC10OSC}$		2.2 V, 3 V	3.7		6.3	MHz
$t_{CONVERT}$	Conversion time	ADC10 built-in oscillator, ADC10SSELx = 0, $f_{ADC10CLK} = f_{ADC10OSC}$		2.2 V, 3 V	2.06		3.51	µs
		$f_{ADC10CLK}$ from ACLK, MCLK or SMCLK, ADC10SSELx ≠ 0			13 × ADC10DIVx × 1 / $f_{ADC10CLK}$			
$t_{ADC10ON}$	Turn on settling time of the ADC[1]						100	ns

(1) The condition is that the error in a conversion started after $t_{ADC10ON}$ is less than ±0.5 LSB. The reference and input signal are already settled.

Copyright © 2006–2012, Texas Instruments Incorporated

10-Bit ADC, Linearity Parameters

over recommended ranges of supply voltage and operating free-air temperature (unless otherwise noted)

PARAMETER		TEST CONDITIONS	V_{CC}	MIN	TYP	MAX	UNIT
E_I	Integral linearity error		2.2 V, 3 V			±1	LSB
E_D	Differential linearity error		2.2 V, 3 V			±1	LSB
E_O	Offset error	Source impedance R_S < 100 Ω	2.2 V, 3 V			±1	LSB
E_G	Gain error	SREFx = 010, unbuffered external reference, V_{eREF+} = 1.5 V	2.2 V		±1.1	±2	LSB
		SREFx = 010, unbuffered external reference, V_{eREF+} = 2.5 V	3 V		±1.1	±2	
		SREFx = 011, buffered external reference(1), V_{eREF+} = 1.5 V	2.2 V		±1.1	±4	
		SREFx = 011, buffered external reference(1), V_{eREF+} = 2.5 V	3 V		±1.1	±3	
E_T	Total unadjusted error	SREFx = 010, unbuffered external reference, V_{eREF+} = 1.5 V	2.2 V		±2	±5	LSB
		SREFx = 010, unbuffered external reference, V_{eREF+} = 2.5 V	3 V		±2	±5	
		SREFx = 011, buffered external reference(1), V_{eREF+} = 1.5 V	2.2 V		±2	±7	
		SREFx = 011, buffered external reference(1), V_{eREF+} = 2.5 V	3 V		±2	±6	

(1) The reference buffer offset adds to the gain and total unadjusted error.

10-Bit ADC, Temperature Sensor and Built-In V_{MID} (1)

over recommended ranges of supply voltage and operating free-air temperature (unless otherwise noted)

PARAMETER		TEST CONDITIONS	V_{CC}	MIN	TYP	MAX	UNIT
I_{SENSOR}	Temperature sensor supply current(1)	REFON = 0, INCHx = 0Ah, T_A = 25°C	2.2 V		40	120	µA
			3 V		60	160	
TC_{SENSOR}		ADC10ON = 1, INCHx = 0Ah(2)	2.2 V, 3 V	3.44	3.55	3.66	mV/°C
$V_{Offset,Sensor}$	Sensor offset voltage	ADC10ON = 1, INCHx = 0Ah(2)		-100		100	mV
V_{SENSOR}	Sensor output voltage(3)	Temperature sensor voltage at T_A = 105°C (T version only)	2.2 V, 3 V	1265	1365	1465	mV
		Temperature sensor voltage at T_A = 85°C		1195	1295	1395	
		Temperature sensor voltage at T_A = 25°C		985	1085	1185	
		Temperature sensor voltage at T_A = 0°C		895	995	1095	
$t_{SENSOR(sample)}$	Sample time required if channel 10 is selected(4)	ADC10ON = 1, INCHx = 0Ah, Error of conversion result ≤ 1 LSB	2.2 V, 3 V	30			µs
I_{VMID}	Current into divider at channel 11(4)	ADC10ON = 1, INCHx = 0Bh	2.2 V			N/A	µA
			3 V			N/A	
V_{MID}	V_{CC} divider at channel 11	ADC10ON = 1, INCHx = 0Bh, V_{MID} ≈ 0.5 × V_{CC}	2.2 V	1.06	1.1	1.14	V
			3 V	1.46	1.5	1.54	
$t_{VMID(sample)}$	Sample time required if channel 11 is selected(5)	ADC10ON = 1, INCHx = 0Bh, Error of conversion result ≤ 1 LSB	2.2 V	1400			ns
			3 V	1220			

(1) The sensor current I_{SENSOR} is consumed if (ADC10ON = 1 and REFON = 1), or (ADC10ON = 1 and INCH = 0Ah and sample signal is high).When REFON = 1, I_{SENSOR} is included in I_{REF+}.When REFON = 0, I_{SENSOR} applies during conversion of the temperature sensor input (INCH = 0Ah).
(2) The following formula can be used to calculate the temperature sensor output voltage:
$V_{Sensor,typ} = TC_{Sensor}$ (273 + T [°C]) + $V_{Offset,sensor}$ [mV] or
$V_{Sensor,typ} = TC_{Sensor}$ T [°C] + $V_{Sensor}(T_A = 0°C)$ [mV]
(3) Results based on characterization and/or production test, not TC_{Sensor} or $V_{Offset,sensor}$.
(4) No additional current is needed. The V_{MID} is used during sampling.
(5) The on time, $t_{VMID(on)}$, is included in the sampling time, $t_{VMID(sample)}$; no additional on time is needed.

Copyright © 2006–2012, Texas Instruments Incorporated

Operational Amplifier (OA) Supply Specifications (MSP430F22x4 Only)

over recommended ranges of supply voltage and operating free-air temperature (unless otherwise noted)

PARAMETER		TEST CONDITIONS	V_{CC}	MIN	TYP	MAX	UNIT
V_{CC}	Supply voltage range			2.2		3.6	V
I_{CC}	Supply current(1)	Fast Mode	2.2 V, 3 V		180	290	µA
		Medium Mode			110	190	
		Slow Mode			50	80	
PSRR	Power-supply rejection ratio	Noninverting	2.2 V, 3 V		70		dB

(1) Corresponding pins configured as OA inputs and outputs, respectively.

Operational Amplifier (OA) Input/Output Specifications (MSP430F22x4 Only)

over recommended ranges of supply voltage and operating free-air temperature (unless otherwise noted)

PARAMETER		TEST CONDITIONS		V_{CC}	MIN	TYP	MAX	UNIT
$V_{I/P}$	Input voltage range				-0.1		V_{CC} - 1.2	V
I_{lkg}	Input leakage current(1) (2)	T_A = -40 to +55°C		2.2 V, 3 V	-5	±0.5	5	nA
		T_A = +55 to +85°C			-20	±5	20	
		T_A = +85 to +105°C			-50		50	
V_n	Voltage noise density, I/P	Fast Mode	$f_{V(I/P)}$ = 1 kHz			50		nV/√Hz
		Medium Mode				80		
		Slow Mode				140		
		Fast Mode	$f_{V(I/P)}$ = 10 kHz			30		
		Medium Mode				50		
		Slow Mode				65		
V_{IO}	Offset voltage, I/P			2.2 V, 3 V			±10	mV
	Offset temperature drift, I/P(3)			2.2 V, 3 V		±10		µV/°C
	Offset voltage drift with supply, I/P	0.3 V ≤ V_{IN} ≤ V_{CC} - 1.0 V ΔV_{CC} ≤ ±10%, T_A = 25°C		2.2 V, 3 V			±1.5	mV/V
V_{OH}	High-level output voltage, O/P	Fast Mode, I_{SOURCE} ≤ -500 µA		2.2 V, 3 V	V_{CC} - 0.2		V_{CC}	V
		Slow Mode, I_{SOURCE} ≤ -150 µA			V_{CC} - 0.1		V_{CC}	
V_{OL}	Low-level output voltage, O/P	Fast Mode, I_{SOURCE} ≤ 500 µA		2.2 V, 3 V	V_{SS}		0.2	V
		Slow Mode, I_{SOURCE} ≤ 150 µA			V_{SS}		0.1	
$R_{O/P(OAx)}$	Output resistance(4) (see Figure 25)	R_{Load} = 3 kΩ, C_{Load} = 50 pF, $V_{O/P(OAx)}$ < 0.2 V		2.2 V, 3 V		150	250	Ω
		R_{Load} = 3 kΩ, C_{Load} = 50 pF, $V_{O/P(OAx)}$ > V_{CC} - 1.2 V				150	250	
		R_{Load} = 3 kΩ, C_{Load} = 50 pF, 0.2 V ≤ $V_{O/P(OAx)}$ ≤ V_{CC} - 0.2 V				0.1	4	
CMRR	Common-mode rejection ratio	Noninverting		2.2 V, 3 V		70		dB

(1) ESD damage can degrade input current leakage.
(2) The input bias current is overridden by the input leakage current.
(3) Calculated using the box method
(4) Specification valid for voltage-follower OAx configuration

Copyright © 2006–2012, Texas Instruments Incorporated

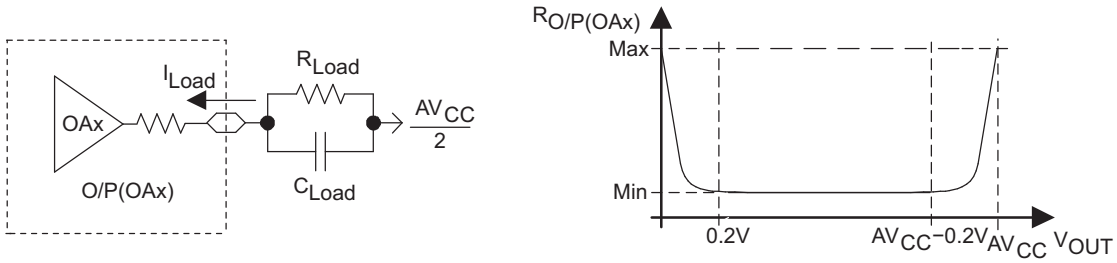

Figure 25. OAx Output Resistance Tests

Operational Amplifier (OA) Dynamic Specifications (MSP430F22x4 Only)

over recommended ranges of supply voltage and operating free-air temperature (unless otherwise noted)

PARAMETER		TEST CONDITIONS	V_{CC}	MIN	TYP	MAX	UNIT
SR	Slew rate	Fast Mode			1.2		V/µs
		Medium Mode			0.8		
		Slow Mode			0.3		
	Open-loop voltage gain				100		dB
φm	Phase margin	C_L = 50 pF			60		deg
	Gain margin	C_L = 50 pF			20		dB
GBW	Gain-bandwidth product (see Figure 26 and Figure 27)	Noninverting, Fast Mode, R_L = 47 kΩ, C_L = 50 pF	2.2 V, 3 V		2.2		MHz
		Noninverting, Medium Mode, R_L = 300 kΩ, C_L = 50 pF			1.4		
		Noninverting, Slow Mode, R_L = 300 kΩ, C_L = 50 pF			0.5		
$t_{en(on)}$	Enable time on	t_{on}, noninverting, Gain = 1	2.2 V, 3 V		10	20	µs
$t_{en(off)}$	Enable time off		2.2 V, 3 V			1	µs

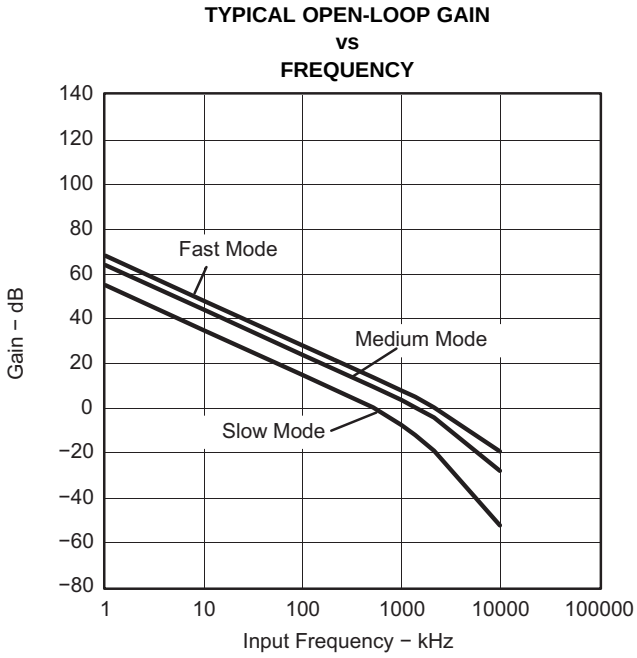

Figure 26.

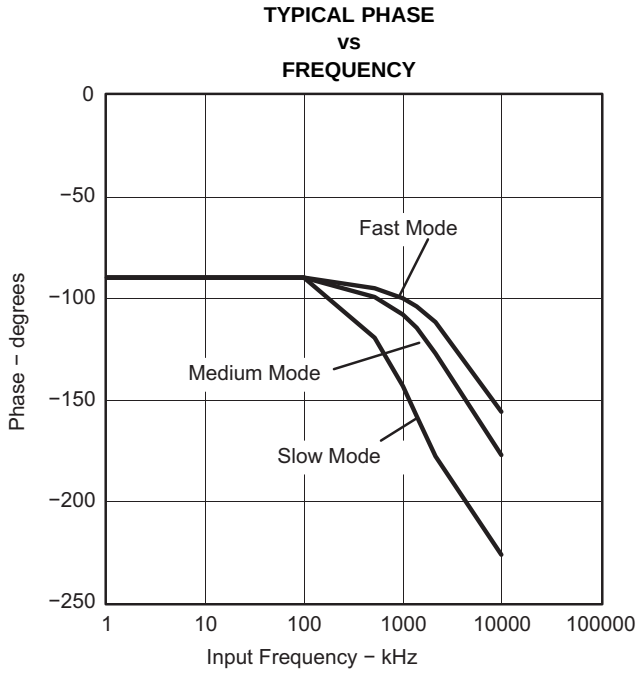

Figure 27.

Copyright © 2006–2012, Texas Instruments Incorporated

Operational Amplifier OA Feedback Network, Resistor Network (MSP430F22x4 Only)(1)

over recommended ranges of supply voltage and operating free-air temperature (unless otherwise noted)

PARAMETER		TEST CONDITIONS	V_{CC}	MIN	TYP	MAX	UNIT
R_{total}	Total resistance of resistor string			76	96	128	kΩ
R_{unit}	Unit resistor of resistor string(2)			4.8	6	8	kΩ

(1) A single resistor string is composed of 4 R_{unit} + 4 R_{unit} + 2 R_{unit} + 2 R_{unit} + 1 R_{unit} + 1 R_{unit} + 1 R_{unit} + 1 R_{unit} = 16 R_{unit} = R_{total}.
(2) For the matching (that is, the relative accuracy) of the unit resistors on a device, see the gain and level specifications of the respective configurations.

Operational Amplifier (OA) Feedback Network, Comparator Mode (OAFCx = 3) (MSP430F22x4 Only)

over recommended ranges of supply voltage and operating free-air temperature (unless otherwise noted)

PARAMETER		TEST CONDITIONS	V_{CC}	MIN	TYP	MAX	UNIT
V_{Level}	Comparator level	OAFBRx = 1, OARRIP = 0	2.2 V, 3 V	0.245	0.25	0.255	V_{CC}
		OAFBRx = 2, OARRIP = 0		0.495	0.5	0.505	
		OAFBRx = 3, OARRIP = 0		0.619	0.625	0.631	
		OAFBRx = 4, OARRIP = 0			N/A(1)		
		OAFBRx = 5, OARRIP = 0			N/A(1)		
		OAFBRx = 6, OARRIP = 0			N/A(1)		
		OAFBRx = 7, OARRIP = 0			N/A(1)		
		OAFBRx = 1, OARRIP = 1		0.061	0.0625	0.065	
		OAFBRx = 2, OARRIP = 1		0.122	0.125	0.128	
		OAFBRx = 3, OARRIP = 1		0.184	0.1875	0.192	
		OAFBRx = 4, OARRIP = 1		0.245	0.25	0.255	
		OAFBRx = 5, OARRIP = 1		0.367	0.375	0.383	
		OAFBRx = 6, OARRIP = 1		0.495	0.5	0.505	
		OAFBRx = 7, OARRIP = 1			N/A(1)		
t_{PLH}, t_{PHL}	Propagation delay (low-high and high-low)	Fast Mode, Overdrive 10 mV	2.2 V, 3 V		40		µs
		Fast Mode, Overdrive 100 mV			4		
		Fast Mode, Overdrive 500 mV			3		
		Medium Mode, Overdrive 10 mV			60		
		Medium Mode, Overdrive 100 mV			6		
		Medium Mode, Overdrive 500 mV			5		
		Slow Mode, Overdrive 10 mV			160		
		Slow Mode, Overdrive 100 mV			20		
		Slow Mode, Overdrive 500 mV			15		

(1) The level is not available due to the analog input voltage range of the operational amplifier.

Copyright © 2006–2012, Texas Instruments Incorporated

Operational Amplifier (OA) Feedback Network, Noninverting Amplifier Mode (OAFCx = 4) (MSP430F22x4 Only)

over recommended ranges of supply voltage and operating free-air temperature (unless otherwise noted)

PARAMETER		TEST CONDITIONS	V_{CC}	MIN	TYP	MAX	UNIT
G	Gain	OAFBRx = 0	2.2 V, 3 V	0.998	1	1.002	
		OAFBRx = 1		1.328	1.334	1.340	
		OAFBRx = 2		1.985	2.001	2.017	
		OAFBRx = 3		2.638	2.667	2.696	
		OAFBRx = 4		3.94	4	4.06	
		OAFBRx = 5		5.22	5.33	5.44	
		OAFBRx = 6		7.76	7.97	8.18	
		OAFBRx = 7		15	15.8	16.6	
THD	Total harmonic distortion/nonlinearity	All gains	2.2 V		-60		dB
			3 V		-70		
t_{Settle}	Settling time (1)	All power modes	2.2 V, 3 V		7	12	µs

(1) The settling time specifies the time until an ADC result is stable. This includes the minimum required sampling time of the ADC. The settling time of the amplifier itself might be faster.

Operational Amplifier (OA) Feedback Network, Inverting Amplifier Mode (OAFCx = 6) (MSP430F22x4 Only) (1)

over recommended ranges of supply voltage and operating free-air temperature (unless otherwise noted)

PARAMETER		TEST CONDITIONS	V_{CC}	MIN	TYP	MAX	UNIT
G	Gain	OAFBRx = 1	2.2 V, 3 V	-0.345	-0.335	-0.325	
		OAFBRx = 2		-1.023	-1.002	-0.979	
		OAFBRx = 3		-1.712	-1.668	-1.624	
		OAFBRx = 4		-3.1	-3	-2.9	
		OAFBRx = 5		-4.51	-4.33	-4.15	
		OAFBRx = 6		-7.37	-6.97	-6.57	
		OAFBRx = 7		-16.3	-14.8	-13.1	
THD	Total harmonic distortion/nonlinearity	All gains	2.2 V		-60		dB
			3 V		-70		
t_{Settle}	Settling time (2)	All power modes	2.2 V, 3 V		7	12	µs

(1) This includes the 2 OA configuration "inverting amplifier with input buffer". Both OA needs to be set to the same power mode OAPMx.
(2) The settling time specifies the time until an ADC result is stable. This includes the minimum required sampling time of the ADC. The settling time of the amplifier itself might be faster.

Copyright © 2006–2012, Texas Instruments Incorporated

Flash Memory

over recommended ranges of supply voltage and operating free-air temperature (unless otherwise noted)

PARAMETER		TEST CONDITIONS	V_{CC}	MIN	TYP	MAX	UNIT
$V_{CC\ (PGM/ERASE)}$	Program and erase supply voltage			2.2		3.6	V
f_{FTG}	Flash timing generator frequency			257		476	kHz
I_{PGM}	Supply current from V_{CC} during program		2.2 V, 3.6 V		1	5	mA
I_{ERASE}	Supply current from V_{CC} during erase		2.2 V, 3.6 V		1	7	mA
t_{CPT}	Cumulative program time (1)		2.2 V, 3.6 V			10	ms
$t_{CMErase}$	Cumulative mass erase time		2.2 V, 3.6 V	20			ms
	Program/Erase endurance			10^4	10^5		cycles
$t_{Retention}$	Data retention duration	T_J = 25°C		100			years
t_{Word}	Word or byte program time	(2)			30		t_{FTG}
$t_{Block,\ 0}$	Block program time for first byte or word	(2)			25		t_{FTG}
$t_{Block,\ 1-63}$	Block program time for each additional byte or word	(2)			18		t_{FTG}
$t_{Block,\ End}$	Block program end-sequence wait time	(2)			6		t_{FTG}
$t_{Mass\ Erase}$	Mass erase time	(2)			10593		t_{FTG}
$t_{Seg\ Erase}$	Segment erase time	(2)			4819		t_{FTG}

(1) The cumulative program time must not be exceeded when writing to a 64-byte flash block. This parameter applies to all programming methods: individual word/byte write and block write modes.
(2) These values are hardwired into the flash controller's state machine ($t_{FTG} = 1/f_{FTG}$).

RAM

over recommended ranges of supply voltage and operating free-air temperature (unless otherwise noted)

PARAMETER		TEST CONDITIONS	MIN	MAX	UNIT
$V_{(RAMh)}$	RAM retention supply voltage (1)	CPU halted	1.6		V

(1) This parameter defines the minimum supply voltage V_{CC} when the data in RAM remains unchanged. No program execution should happen during this supply voltage condition.

Copyright © 2006–2012, Texas Instruments Incorporated

JTAG and Spy-Bi-Wire Interface

over recommended ranges of supply voltage and operating free-air temperature (unless otherwise noted)

PARAMETER		TEST CONDITIONS	V_{CC}	MIN	TYP	MAX	UNIT
f_{SBW}	Spy-Bi-Wire input frequency		2.2 V, 3 V	0		20	MHz
$t_{SBW,Low}$	Spy-Bi-Wire low clock pulse length		2.2 V, 3 V	0.025		15	µs
$t_{SBW,En}$	Spy-Bi-Wire enable time (TEST high to acceptance of first clock edge(1))		2.2 V, 3 V			1	µs
$t_{SBW,Ret}$	Spy-Bi-Wire return to normal operation time		2.2 V, 3 V	15		100	µs
f_{TCK}	TCK input frequency(2)		2.2 V	0		5	MHz
			3 V	0		10	MHz
$R_{Internal}$	Internal pulldown resistance on TEST		2.2 V, 3 V	25	60	90	kΩ

(1) Tools accessing the Spy-Bi-Wire interface need to wait for the maximum $t_{SBW,En}$ time after pulling the TEST/SBWCLK pin high before applying the first SBWCLK clock edge.
(2) f_{TCK} may be restricted to meet the timing requirements of the module selected.

JTAG Fuse(1)

over recommended ranges of supply voltage and operating free-air temperature (unless otherwise noted)

PARAMETER		TEST CONDITIONS	MIN	MAX	UNIT
$V_{CC(FB)}$	Supply voltage during fuse-blow condition	T_A = 25°C	2.5		V
V_{FB}	Voltage level on TEST for fuse blow		6	7	V
I_{FB}	Supply current into TEST during fuse blow			100	mA
t_{FB}	Time to blow fuse			1	ms

(1) Once the fuse is blown, no further access to the JTAG/Test, Spy-Bi-Wire, and emulation feature is possible, and JTAG is switched to bypass mode.

Copyright © 2006–2012, Texas Instruments Incorporated

APPLICATION INFORMATION

Port P1 Pin Schematic: P1.0 to P1.3, Input/Output With Schmitt Trigger

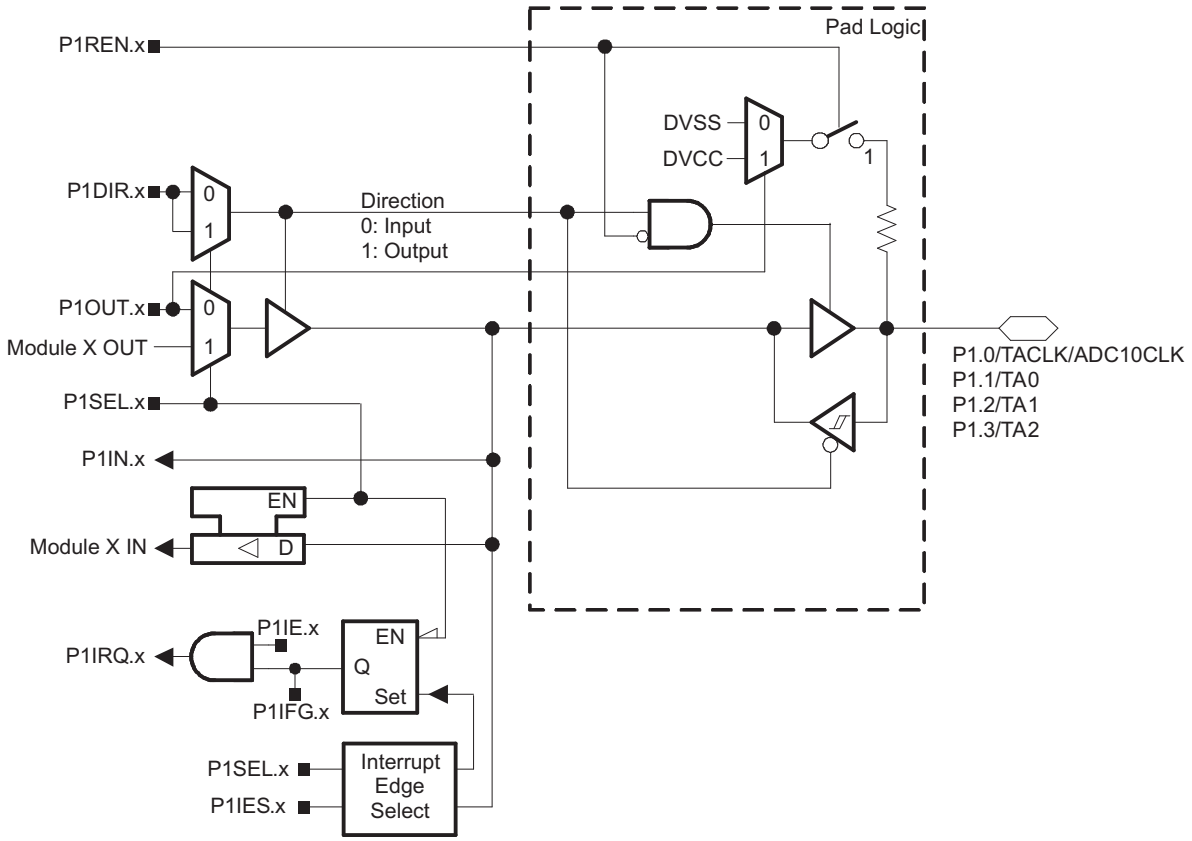

Table 21. Port P1 (P1.0 to P1.3) Pin Functions

PIN NAME (P1.x)	x	FUNCTION	CONTROL BITS/SIGNALS	
			P1DIR.x	P1SEL.x
P1.0/TACLK/ADC10CLK	0	P1.0 (1)	I: 0; O: 1	0
		Timer_A3.TACLK	0	1
		ADC10CLK	1	1
P1.1/TA0	1	P1.1 (1) (I/O)	I: 0; O: 1	0
		Timer_A3.CCI0A	0	1
		Timer_A3.TA0	1	1
P1.2/TA1	2	P1.2 (1) (I/O)	I: 0; O: 1	0
		Timer_A3.CCI1A	0	1
		Timer_A3.TA1	1	1
P1.3/TA2	3	P1.3 (1) (I/O)	I: 0; O: 1	0
		Timer_A3.CCI2A	0	1
		Timer_A3.TA2	1	1

(1) Default after reset (PUC/POR)

Copyright © 2006–2012, Texas Instruments Incorporated

Port P1 Pin Schematic: P1.4 to P1.6, Input/Output With Schmitt Trigger and In-System Access Features

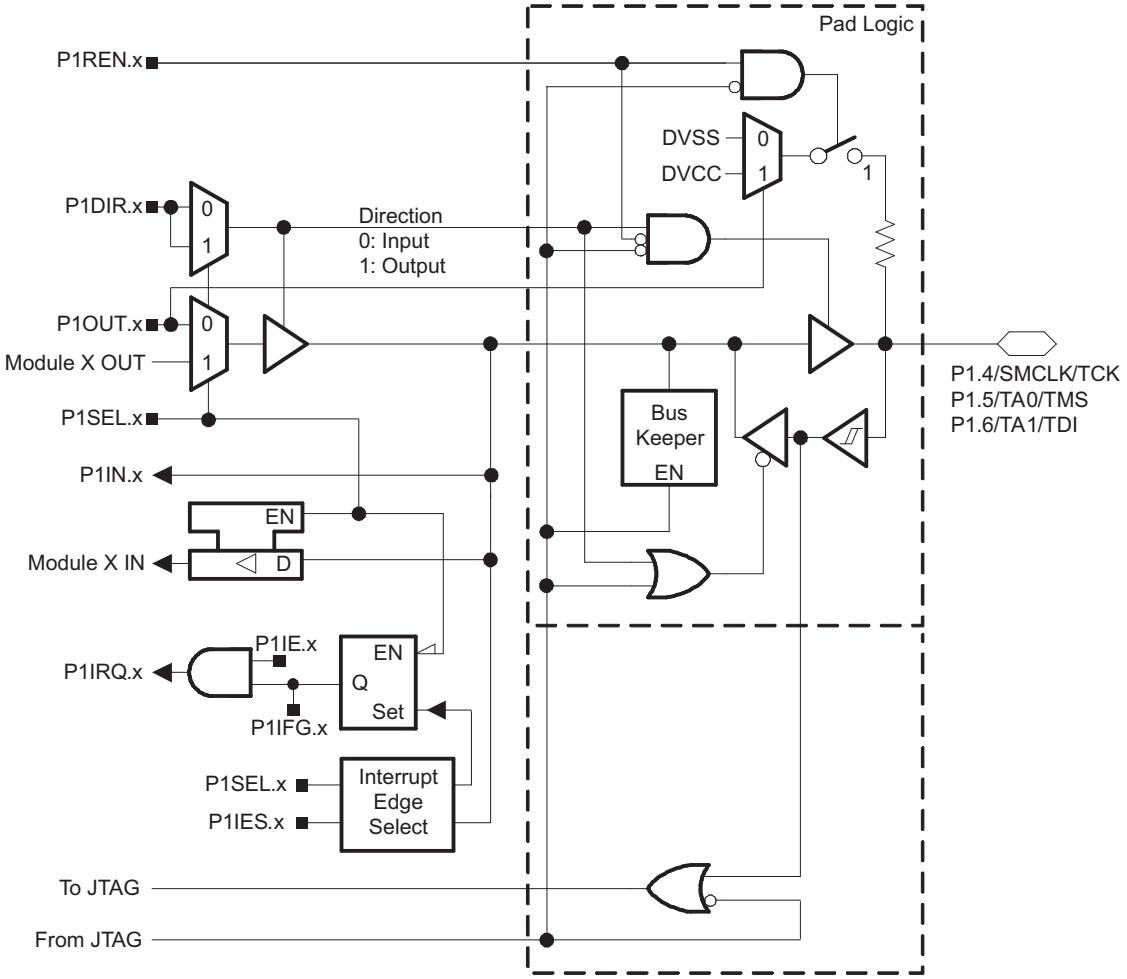

Table 22. Port P1 (P1.4 to P1.6) Pin Functions

PIN NAME (P1.x)	x	FUNCTION	CONTROL BITS/SIGNALS[1]		
			P1DIR.x	P1SEL.x	4-Wire JTAG
P1.4/SMCLK/TCK	4	P1.4[2] (I/O)	I: 0; O: 1	0	0
		SMCLK	1	1	0
		TCK	X	X	1
P1.5/TA0/TMS	5	P1.5[2] (I/O)	I: 0; O: 1	0	0
		Timer_A3.TA0	1	1	0
		TMS	X	X	1
P1.6/TA1/TDI/TCLK	6	P1.6[2] (I/O)	I: 0; O: 1	0	0
		Timer_A3.TA1	1	1	0
		TDI/TCLK[3]	X	X	1

(1) X = Don't care
(2) Default after reset (PUC/POR)
(3) Function controlled by JTAG

Copyright © 2006–2012, Texas Instruments Incorporated

Port P1 Pin Schematic: P1.7, Input/Output With Schmitt Trigger and In-System Access Features

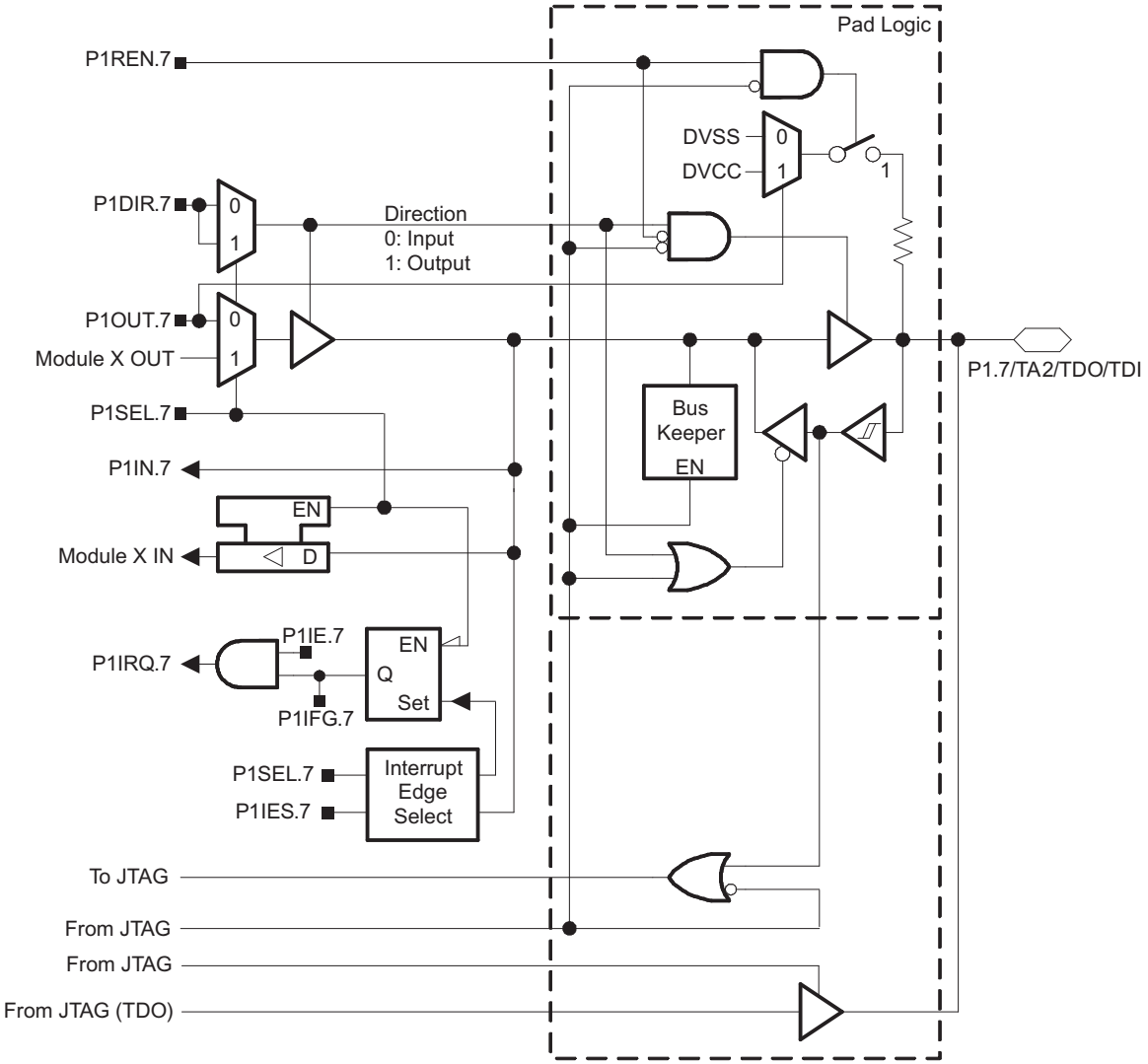

Table 23. Port P1 (P1.7) Pin Functions

PIN NAME (P1.x)	x	FUNCTION	CONTROL BITS/SIGNALS[1]		
			P1DIR.x	P1SEL.x	4-Wire JTAG
P1.7/TA2/TDO/TDI	7	P1.7[2] (I/O)	I: 0; O: 1	0	0
		Timer_A3.TA2	1	1	0
		TDO/TDI[3]	X	X	1

(1) X = Don't care
(2) Default after reset (PUC/POR)
(3) Function controlled by JTAG

Copyright © 2006–2012, Texas Instruments Incorporated

Port P2 Pin Schematic: P2.0, P2.2, Input/Output With Schmitt Trigger

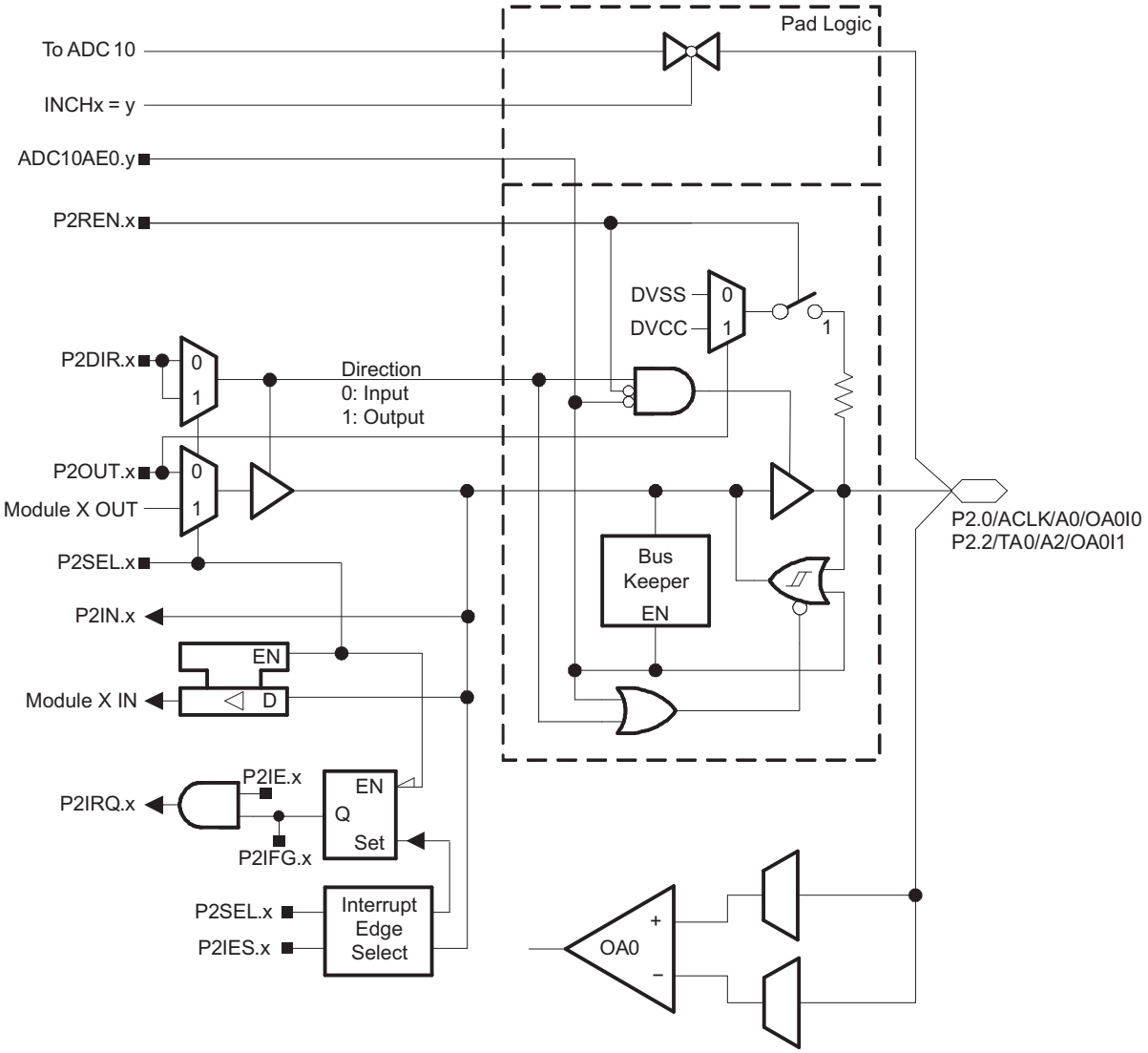

Table 24. Port P2 (P2.0, P2.2) Pin Functions

Pin Name (P2.x)	x	y	FUNCTION	CONTROL BITS/SIGNALS[1]		
				P2DIR.x	P2SEL.x	ADC10AE0.y
P2.0/ACLK/A0/OA0I0	0	0	P2.0[2] (I/O)	I: 0; O: 1	0	0
			ACLK	1	1	0
			A0/OA0I0[3]	X	X	1
P2.2/TA0/A2/OA0I1	2	2	P2.2[2] (I/O)	I: 0; O: 1	0	0
			Timer_A3.CCI0B	0	1	0
			Timer_A3.TA0	1	1	0
			A2/OA0I1[3]	X	X	1

(1) X = Don't care
(2) Default after reset (PUC/POR)
(3) Setting the ADC10AE0.y bit disables the output driver as well as the input Schmitt trigger to prevent parasitic cross currents when applying analog signals.

Copyright © 2006–2012, Texas Instruments Incorporated

Port P2 Pin Schematic: P2.1, Input/Output With Schmitt Trigger

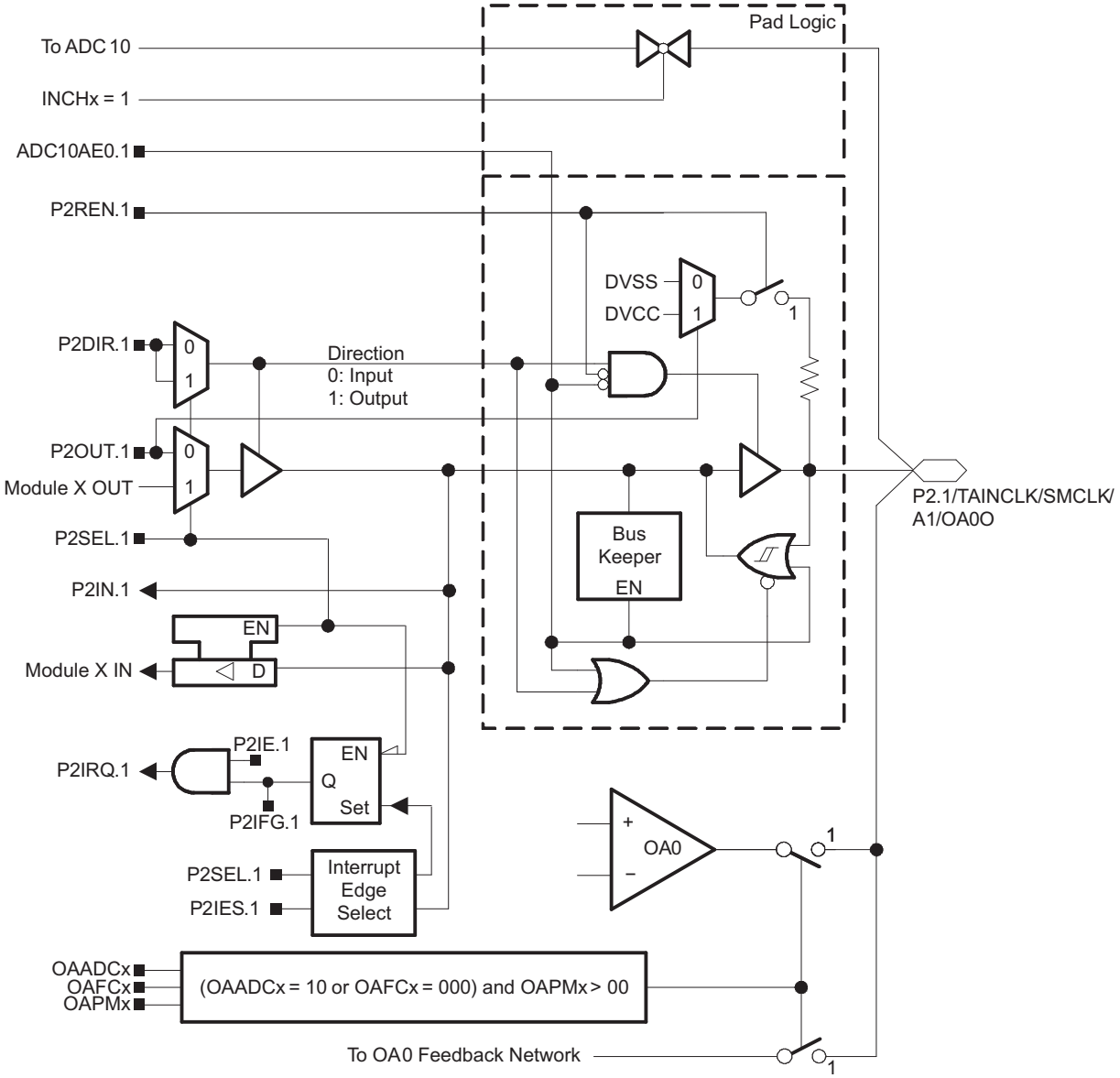

Table 25. Port P2 (P2.1) Pin Functions

PIN NAME (P2.x)	x	y	FUNCTION	CONTROL BITS/SIGNALS (1)		
				P2DIR.x	P2SEL.x	ADC10AE0.y
P2.1/TAINCLK/SMCLK/ A1/OA0O	1	1	P2.1 (2) (I/O)	I: 0; O: 1	0	0
			Timer_A3.INCLK	0	1	0
			SMCLK	1	1	0
			A1/OA0O (3)	X	X	1

(1) X = Don't care
(2) Default after reset (PUC/POR)
(3) Setting the ADC10AE0.y bit disables the output driver as well as the input Schmitt trigger to prevent parasitic cross currents when applying analog signals.

Copyright © 2006–2012, Texas Instruments Incorporated

Port P2 Pin Schematic: P2.3, Input/Output With Schmitt Trigger

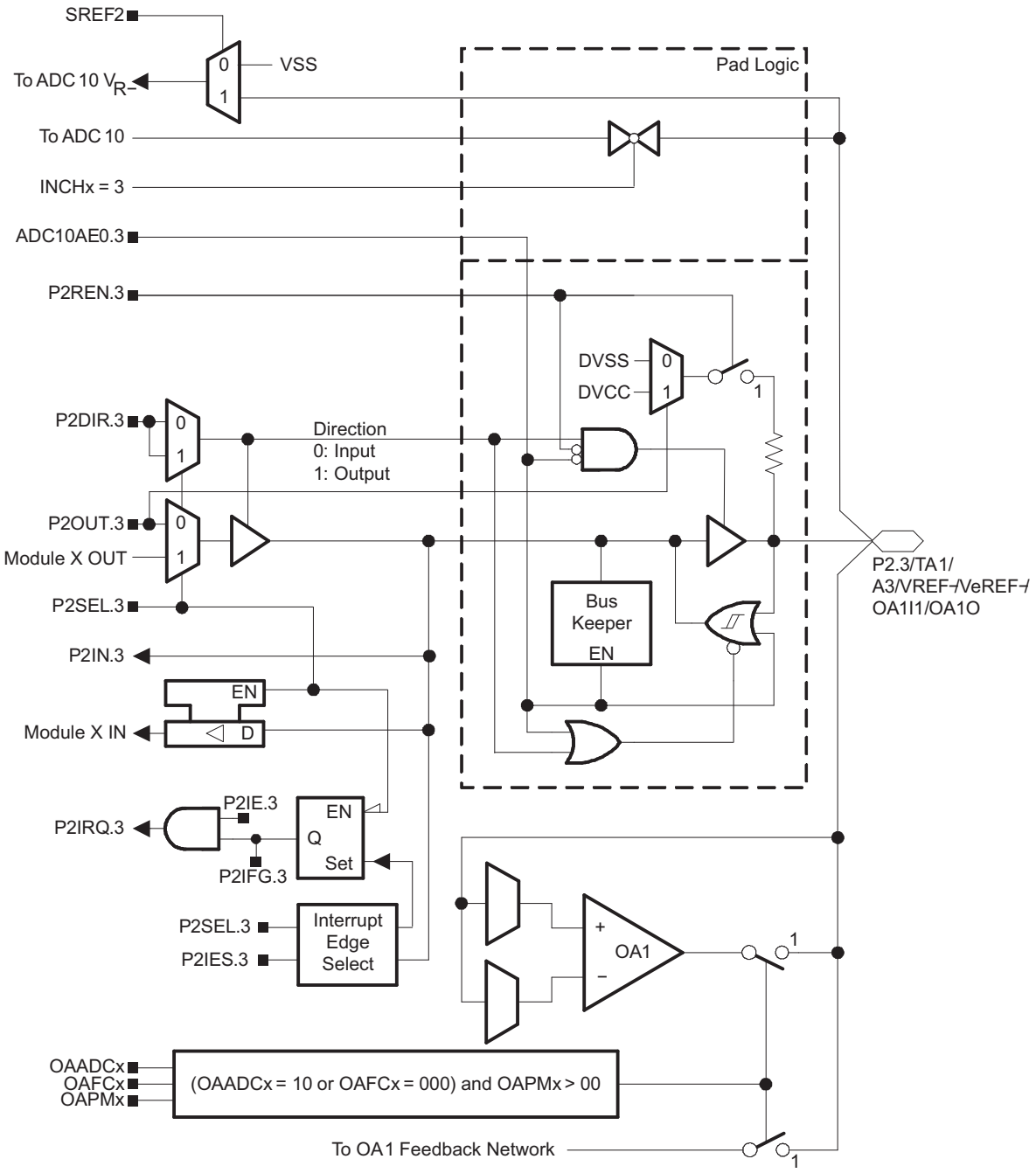

Table 26. Port P2 (P2.3) Pin Functions

PIN NAME (P2.x)	x	y	FUNCTION	CONTROL BITS/SIGNALS (1)		
				P2DIR.x	P2SEL.x	ADC10AE0.y
P2.3/TA1/A3/V_{REF-}/V_{eREF-}/ OA1I1/OA1O	3	3	P2.3 (2) (I/O)	I: 0; O: 1	0	0
			Timer_A3.CCI1B	0	1	0
			Timer_A3.TA1	1	1	0
			A3/V_{REF-}/V_{eREF-}/OA1I1/OA1O (3)	X	X	1

(1) X = Don't care
(2) Default after reset (PUC/POR)
(3) Setting the ADC10AE0.y bit disables the output driver as well as the input Schmitt trigger to prevent parasitic cross currents when applying analog signals.

Copyright © 2006–2012, Texas Instruments Incorporated

Port P2 Pin Schematic: P2.4, Input/Output With Schmitt Trigger

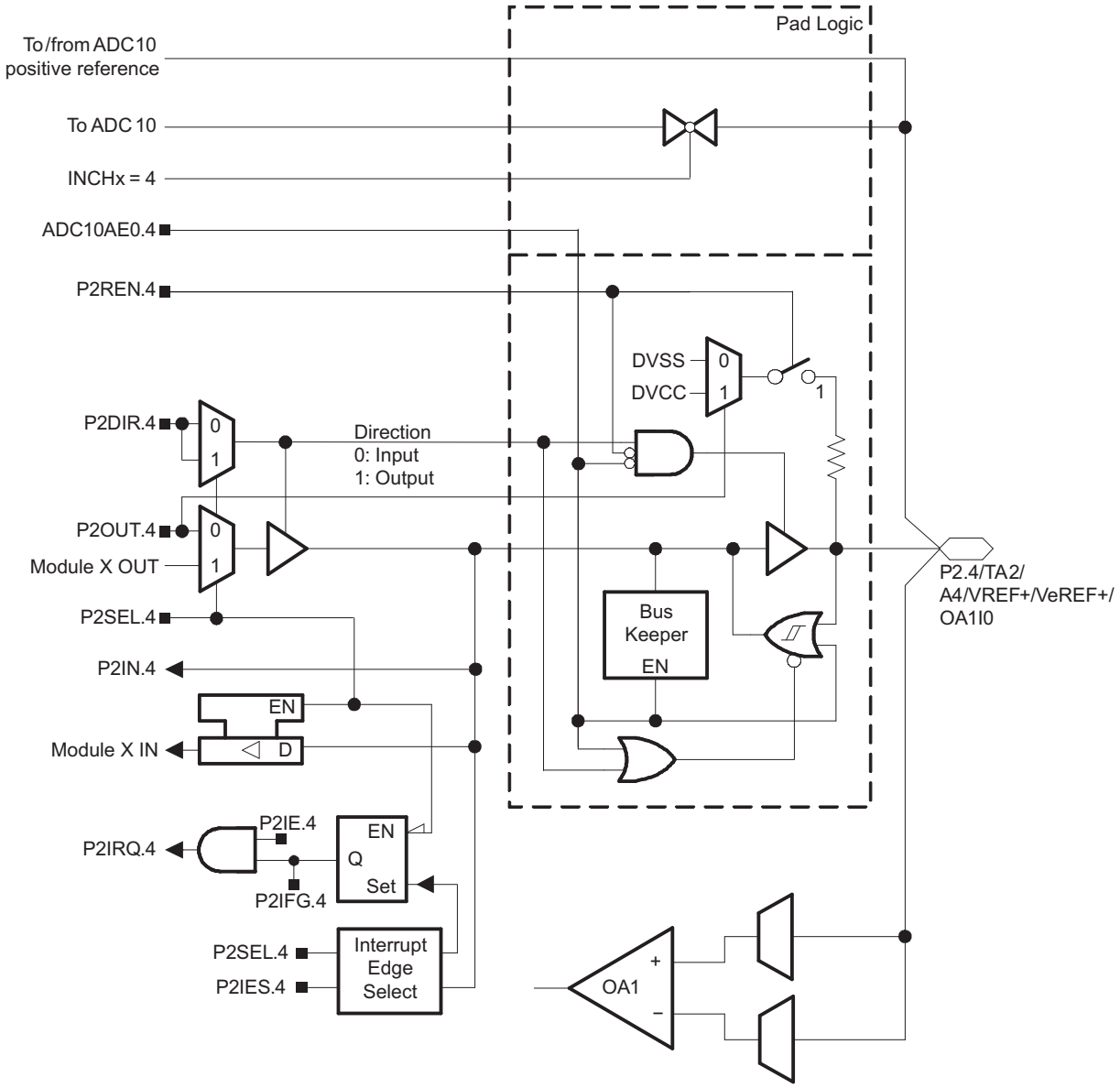

Table 27. Port P2 (P2.4) Pin Functions

PIN NAME (P2.x)	x	y	FUNCTION	CONTROL BITS/SIGNALS[1]		
				P2DIR.x	P2SEL.x	ADC10AE0.y
P2.4/TA2/A4/V_{REF+}/ V_{eREF+}/ OA1I0	4	4	P2.4[2] (I/O)	I: 0; O: 1	0	0
			Timer_A3.TA2	1	1	0
			A4/V_{REF+}/V_{eREF+}/OA1I0[3]	X	X	1

(1) X = Don't care
(2) Default after reset (PUC/POR)
(3) Setting the ADC10AE0.y bit disables the output driver as well as the input Schmitt trigger to prevent parasitic cross currents when applying analog signals.

Copyright © 2006–2012, Texas Instruments Incorporated

Port P2 Pin Schematic: P2.5, Input/Output With Schmitt Trigger and External R_{OSC} for DCO

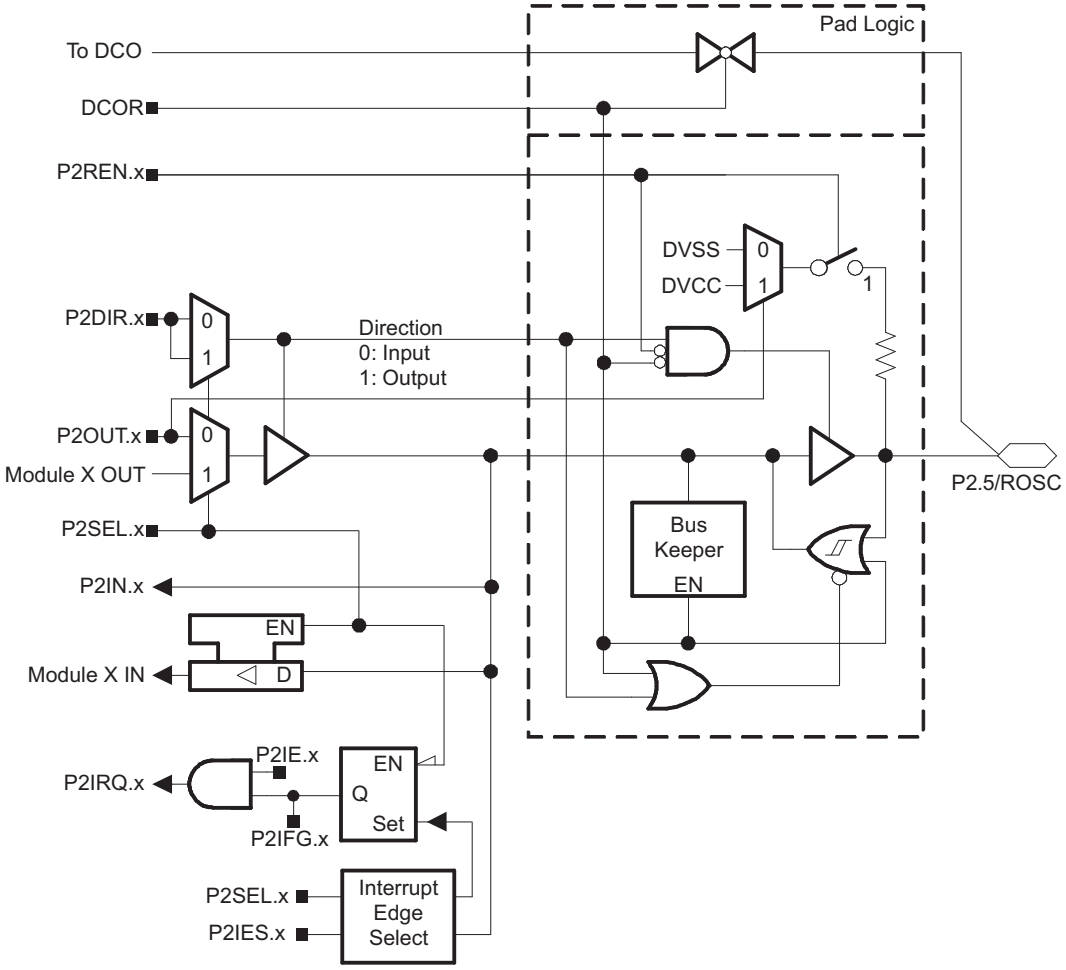

Table 28. Port P2 (P2.5) Pin Functions

PIN NAME (P2.x)	x	FUNCTION	CONTROL BITS/SIGNALS[1]		
			P2DIR.x	P2SEL.x	DCOR
P2.5/R_{OSC}	5	P2.5[2] (I/O)	I: 0; O: 1	0	0
		N/A[3]	0	1	0
		DV_{SS}	1	1	0
		R_{OSC}	X	X	1

(1) X = Don't care
(2) Default after reset (PUC/POR)
(3) N/A = Not available or not applicable

Copyright © 2006–2012, Texas Instruments Incorporated

Port P2 Pin Schematic: P2.6, Input/Output With Schmitt Trigger and Crystal Oscillator Input

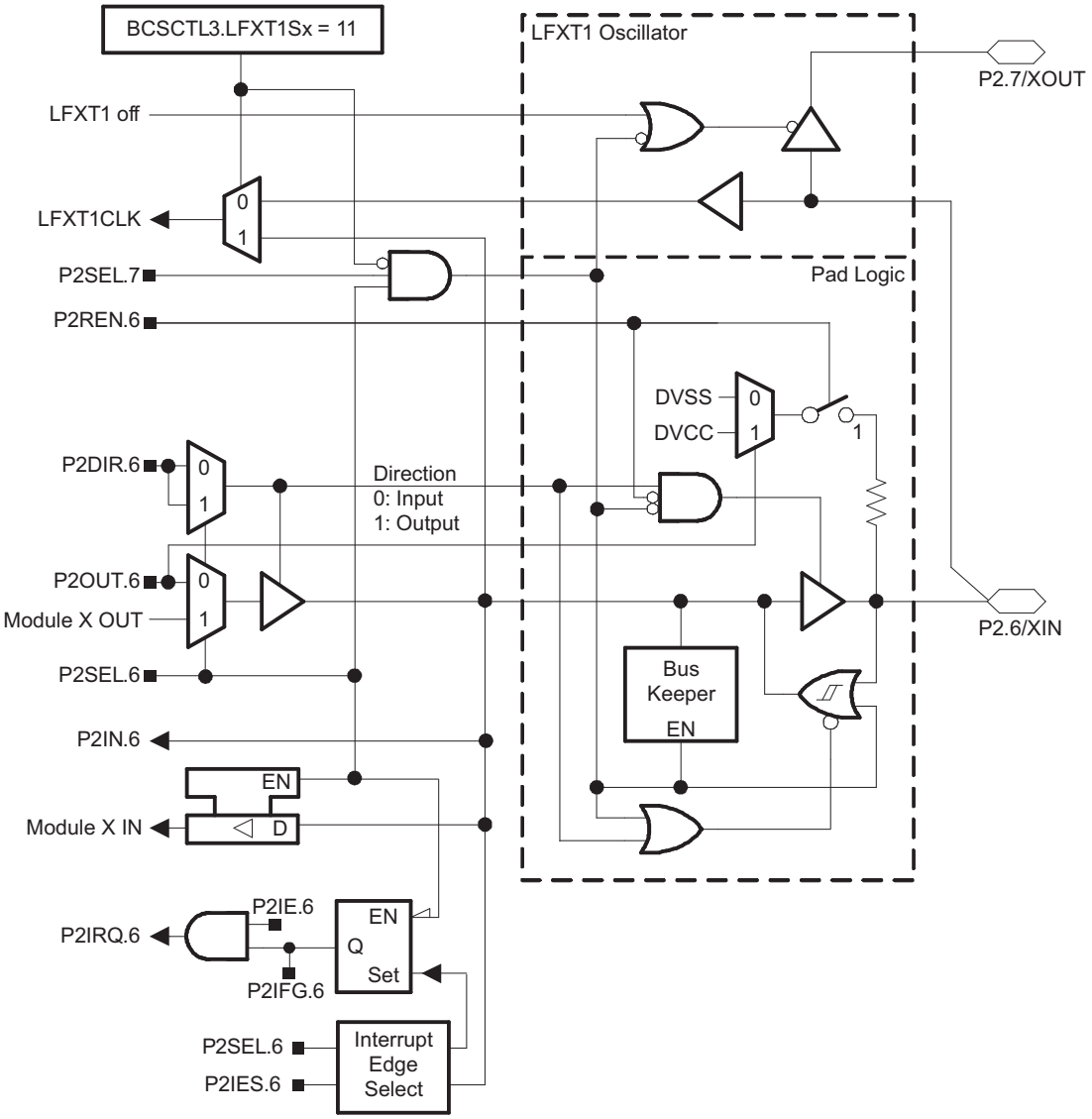

Table 29. Port P2 (P2.6) Pin Functions

PIN NAME (P2.x)	x	FUNCTION	CONTROL BITS/SIGNALS[1]	
			P2DIR.x	P2SEL.x
P2.6/XIN	6	P2.6 (I/O)	I: 0; O: 1	0
		XIN[2]	X	1

(1) X = Don't care
(2) Default after reset (PUC/POR)

Copyright © 2006–2012, Texas Instruments Incorporated

Port P2 Pin Schematic: P2.7, Input/Output With Schmitt Trigger and Crystal Oscillator Output

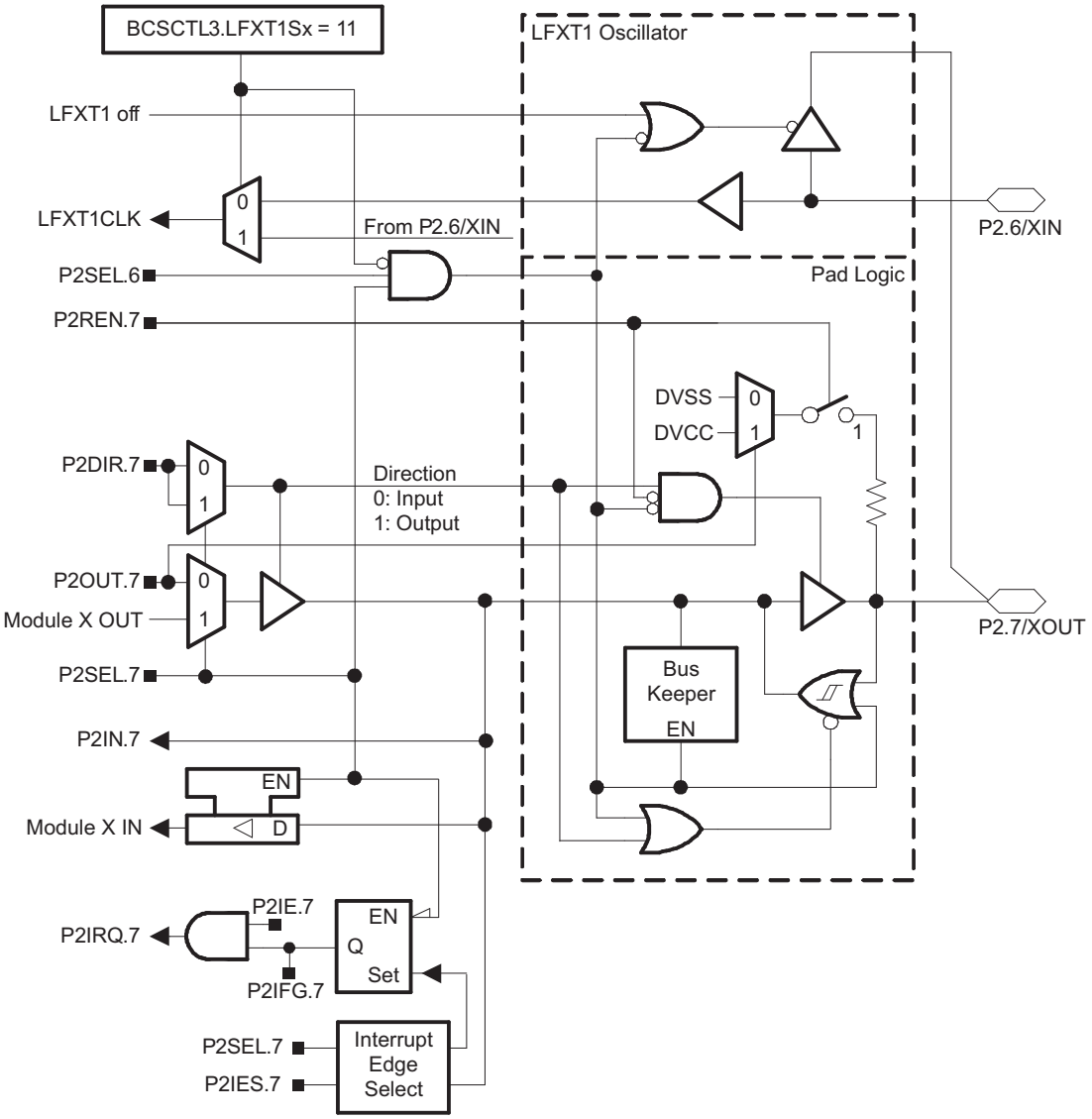

Table 30. Port P2 (P2.7) Pin Functions

PIN NAME (P2.x)	x	FUNCTION	CONTROL BITS/SIGNALS[1]	
			P2DIR.x	P2SEL.x
XOUT/P2.7	7	P2.7 (I/O)	I: 0; O: 1	0
		XOUT[2] [3]	X	1

(1) X = Don't care
(2) Default after reset (PUC/POR)
(3) If the pin XOUT/P2.7 is used as an input a current can flow until P2SEL.7 is cleared due to the oscillator output driver connection to this pin after reset.

Copyright © 2006–2012, Texas Instruments Incorporated

Port P3 Pin Schematic: P3.0, Input/Output With Schmitt Trigger

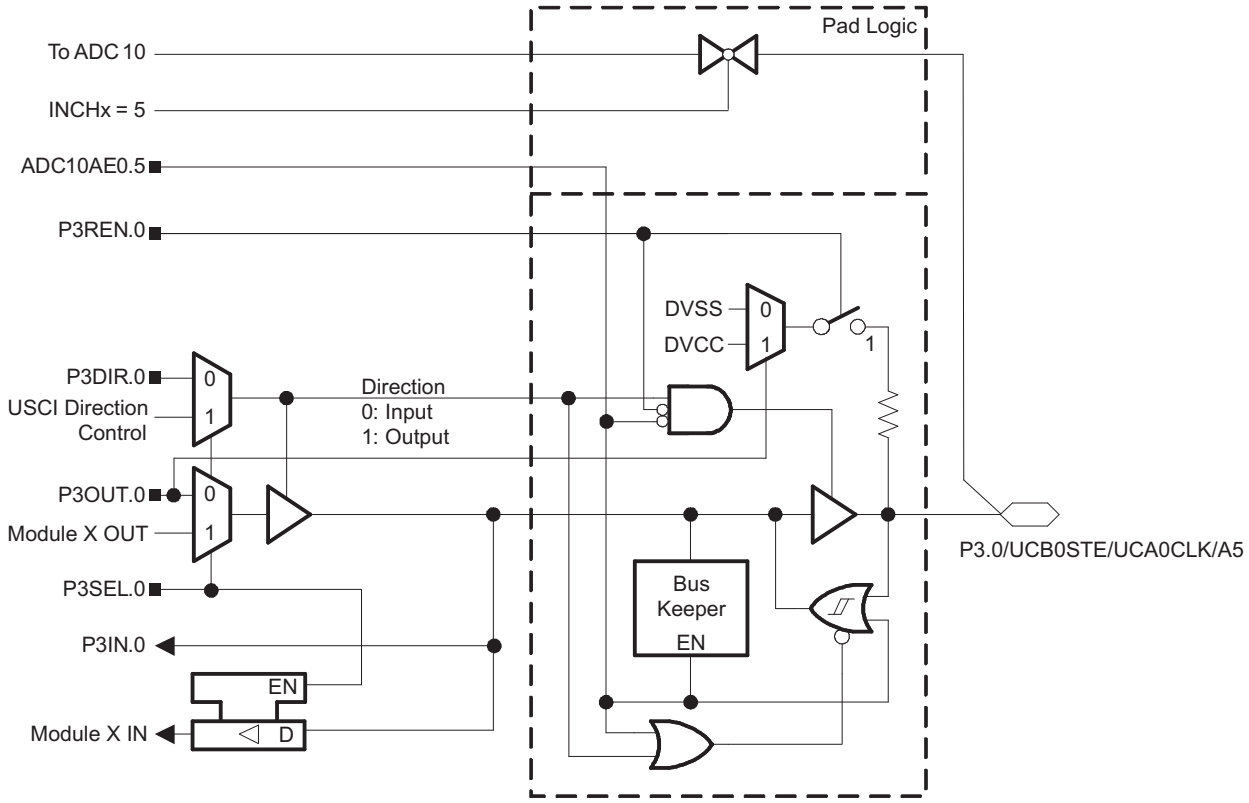

Table 31. Port P3 (P3.0) Pin Functions

PIN NAME (P1.x)	x	y	FUNCTION	CONTROL BITS/SIGNALS[1]		
				P3DIR.x	P3SEL.x	ADC10AE0.y
P3.0/UCB0STE/ UCA0CLK/A5	0	5	P3.0[2] (I/O)	I: 0; O: 1	0	0
			UCB0STE/UCA0CLK[3] [4]	X	1	0
			A5[5]	X	X	1

(1) X = Don't care
(2) Default after reset (PUC/POR)
(3) The pin direction is controlled by the USCI module.
(4) UCA0CLK function takes precedence over UCB0STE function. If the pin is required as UCA0CLK input or output, USCI_B0 is forced to 3-wire SPI mode if 4-wire SPI mode is selected.
(5) Setting the ADC10AE0.y bit disables the output driver as well as the input Schmitt trigger to prevent parasitic cross currents when applying analog signals.

Copyright © 2006–2012, Texas Instruments Incorporated

Port P3 Pin Schematic: P3.1 to P3.5, Input/Output With Schmitt Trigger

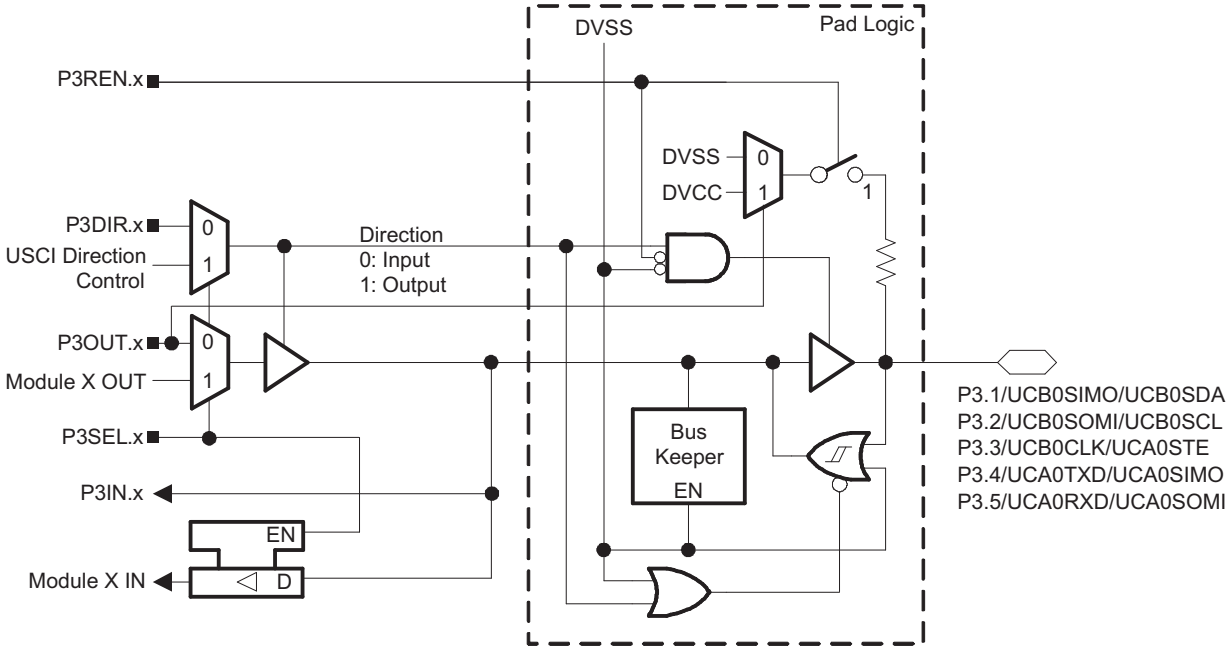

Table 32. Port P3 (P3.1 to P3.5) Pin Functions

PIN NAME (P3.x)	x	FUNCTION	CONTROL BITS/SIGNALS[1]	
			P3DIR.x	P3SEL.x
P3.1/UCB0SIMO/UCB0SDA	1	P3.1[2] (I/O)	I: 0; O: 1	0
		UCB0SIMO/UCB0SDA[3]	X	1
P3.2/UCB0SOMI/UCB0SCL	2	P3.2[2] (I/O)	I: 0; O: 1	0
		UCB0SOMI/UCB0SCL[3]	X	1
P3.3/UCB0CLK/UCA0STE	3	P3.3[2] (I/O)	I: 0; O: 1	0
		UCB0CLK/UCA0STE[3] [4]	X	1
P3.4/UCA0TXD/UCA0SIMO	4	P3.4[2] (I/O)	I: 0; O: 1	0
		UCA0TXD/UCA0SIMO[3]	X	1
P3.5/UCA0RXD/UCA0SOMI	5	P3.5[2] (I/O)	I: 0; O: 1	0
		UCA0RXD/UCA0SOMI[3]	X	1

(1) X = Don't care
(2) Default after reset (PUC/POR)
(3) The pin direction is controlled by the USCI module.
(4) UCB0CLK function takes precedence over UCA0STE function. If the pin is required as UCB0CLK input or output, USCI_A0 is forced to 3-wire SPI mode even if 4-wire SPI mode is selected.

Copyright © 2006–2012, Texas Instruments Incorporated

Port P3 Pin Schematic: P3.6 to P3.7, Input/Output With Schmitt Trigger

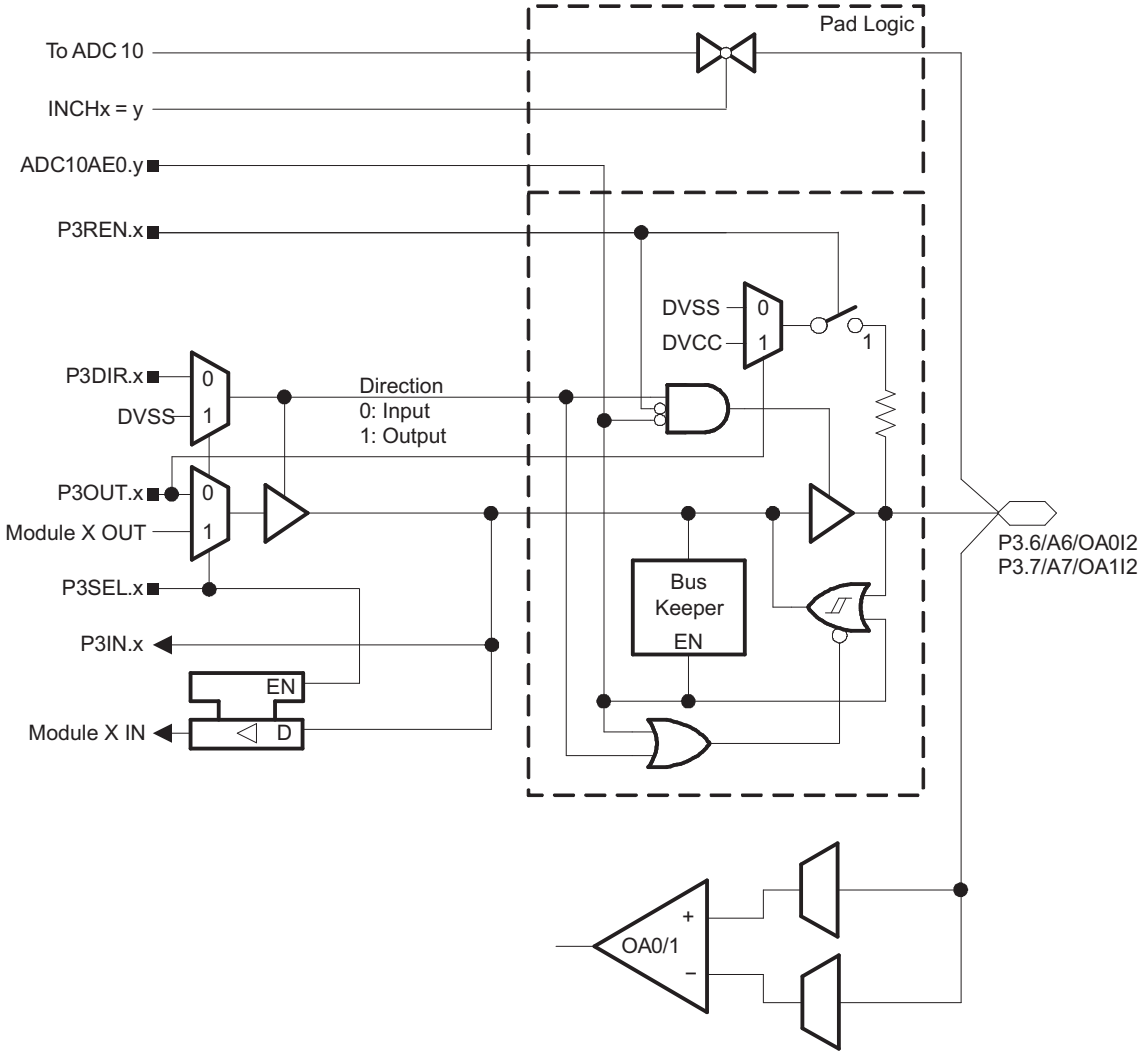

Table 33. Port P3 (P3.6, P3.7) Pin Functions

PIN NAME (P3.x)	x	y	FUNCTION	CONTROL BITS/SIGNALS (1)		
				P3DIR.x	P3SEL.x	ADC10AE0.y
P3.6/A6/OA0I2	6	6	P3.6 (2) (I/O)	I: 0; O: 1	0	0
			A6/OA0I2 (3)	X	X	1
P3.7/A7/OA1I2	7	7	P3.7 (2) (I/O)	I: 0; O: 1	0	0
			A7/OA1I2 (3)	X	X	1

(1) X = Don't care
(2) Default after reset (PUC/POR)
(3) Setting the ADC10AE0.y bit disables the output driver as well as the input Schmitt trigger to prevent parasitic cross currents when applying analog signals.

Copyright © 2006–2012, Texas Instruments Incorporated

Port P4 Pin Schematic: P4.0 to P4.2, Input/Output With Schmitt Trigger

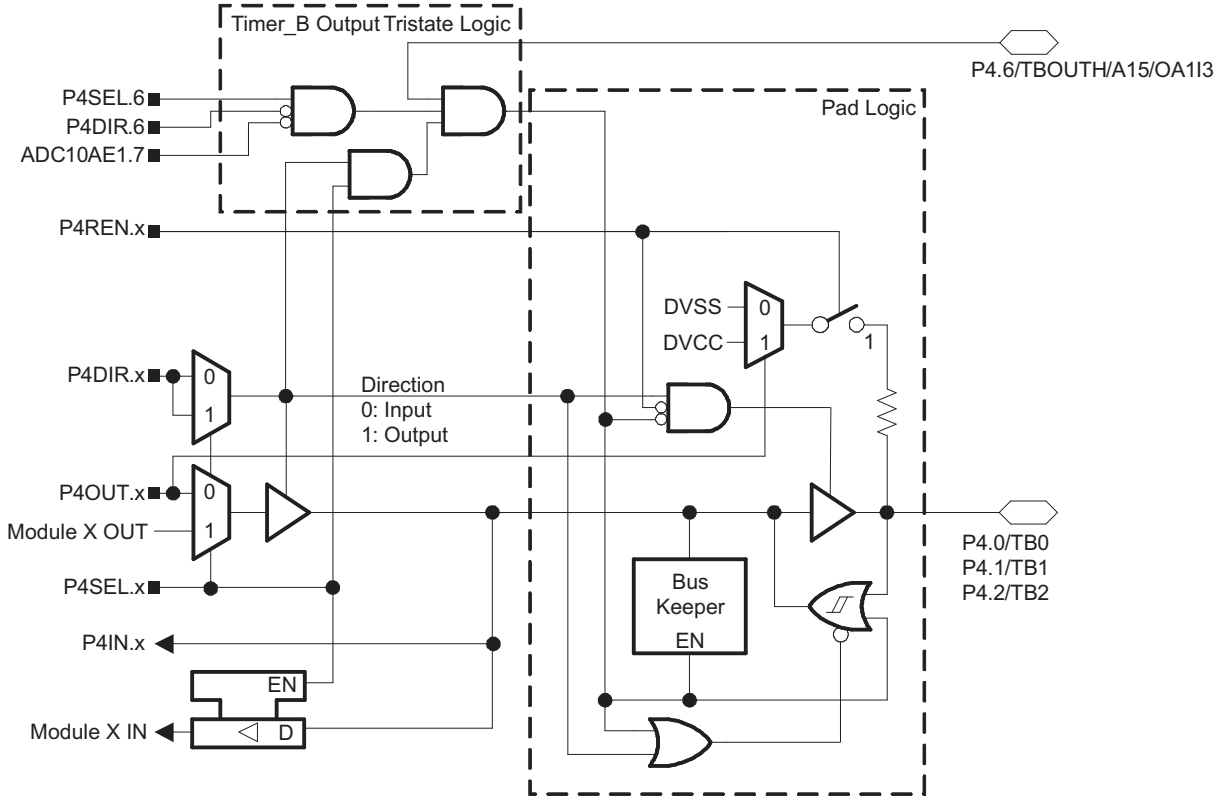

Table 34. Port P4 (P4.0 to P4.2) Pin Functions

PIN NAME (P4.x)	x	FUNCTION	CONTROL BITS/SIGNALS	
			P4DIR.x	P4SEL.x
P4.0/TB0	0	P4.0[(1)] (I/O)	I: 0; O: 1	0
		Timer_B3.CCI0A	0	1
		Timer_B3.TB0	1	1
P4.1/TB1	1	P4.1[(1)] (I/O)	I: 0; O: 1	0
		Timer_B3.CCI1A	0	1
		Timer_B3.TB1	1	1
P4.2/TB2	2	P4.2[(1)] (I/O)	I: 0; O: 1	0
		Timer_B3.CCI2A	0	1
		Timer_B3.TB2	1	1

(1) Default after reset (PUC/POR)

Copyright © 2006–2012, Texas Instruments Incorporated

Port P4 Pin Schematic: P4.3 to P4.4, Input/Output With Schmitt Trigger

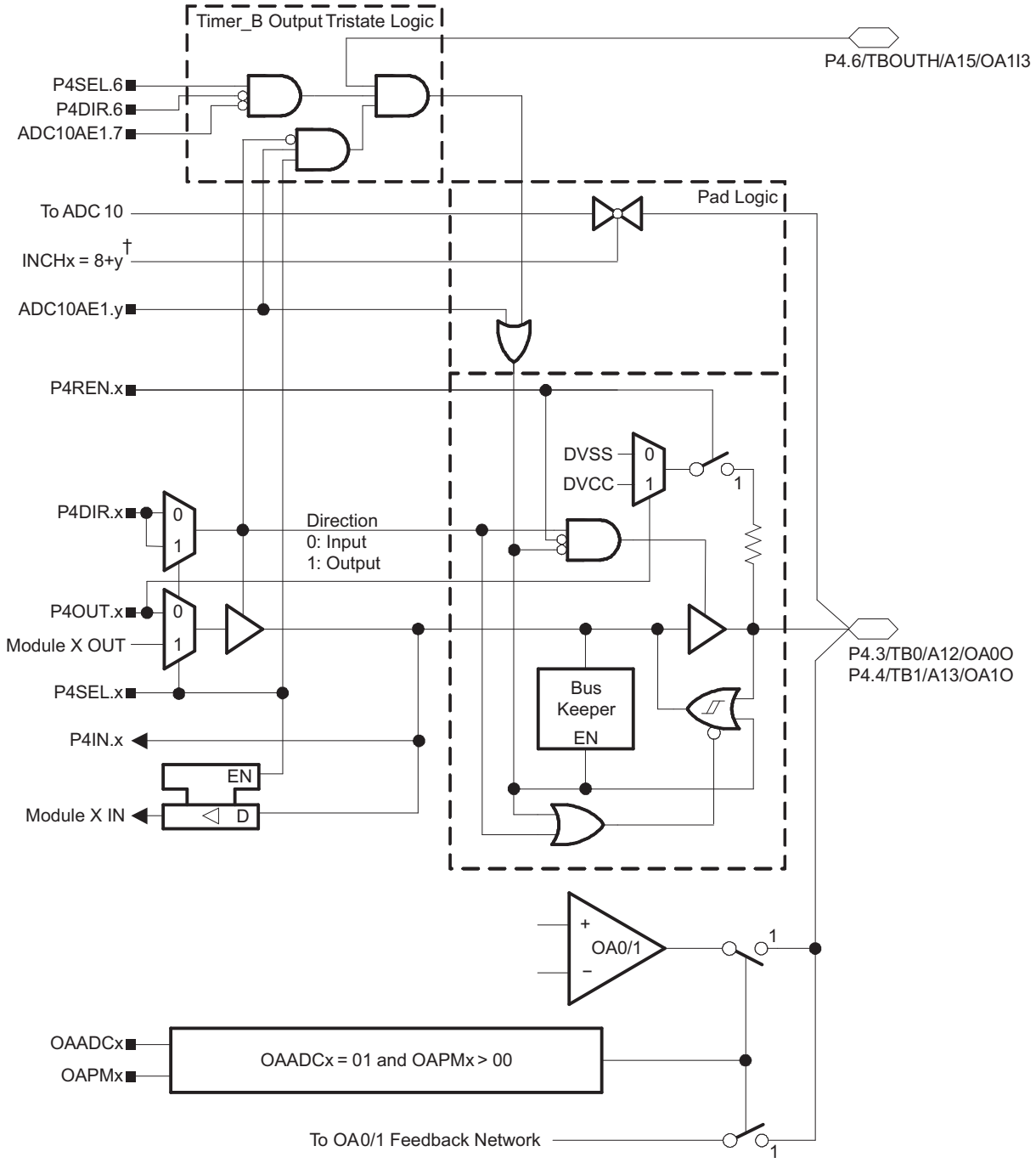

†If OAADCx = 11 and not OAFCx = 000, the ADC input A12 or A13 is internally connected to the OA0 or OA1 output, respectively, and the connections from the ADC and the operational amplifiers to the pad are disabled.

Copyright © 2006–2012, Texas Instruments Incorporated

Table 35. Port P4 (P4.3 to P4.4) Pin Functions

PIN NAME (P4.x)	x	y	FUNCTION	CONTROL BITS/SIGNALS (1)		
				P4DIR.x	P4SEL.x	ADC10AE1.y
P4.3/TB0/A12/OA0O	3	4	P4.3 (2) (I/O)	I: 0; O: 1	0	0
			Timer_B3.CCI0B	0	1	0
			Timer_B3.TB0	1	1	0
			A12/OA0O (3)	X	X	1
P4.4/TB1/A13/OA1O	4	5	P4.4 (2) (I/O)	I: 0; O: 1	0	0
			Timer_B3.CCI1B	0	1	0
			Timer_B3.TB1	1	1	0
			A13/OA1O (3)	X	X	1

(1) X = Don't care
(2) Default after reset (PUC/POR)
(3) Setting the ADC10AE1.y bit disables the output driver as well as the input Schmitt trigger to prevent parasitic cross currents when applying analog signals.

Copyright © 2006–2012, Texas Instruments Incorporated

Port P4 Pin Schematic: P4.5, Input/Output With Schmitt Trigger

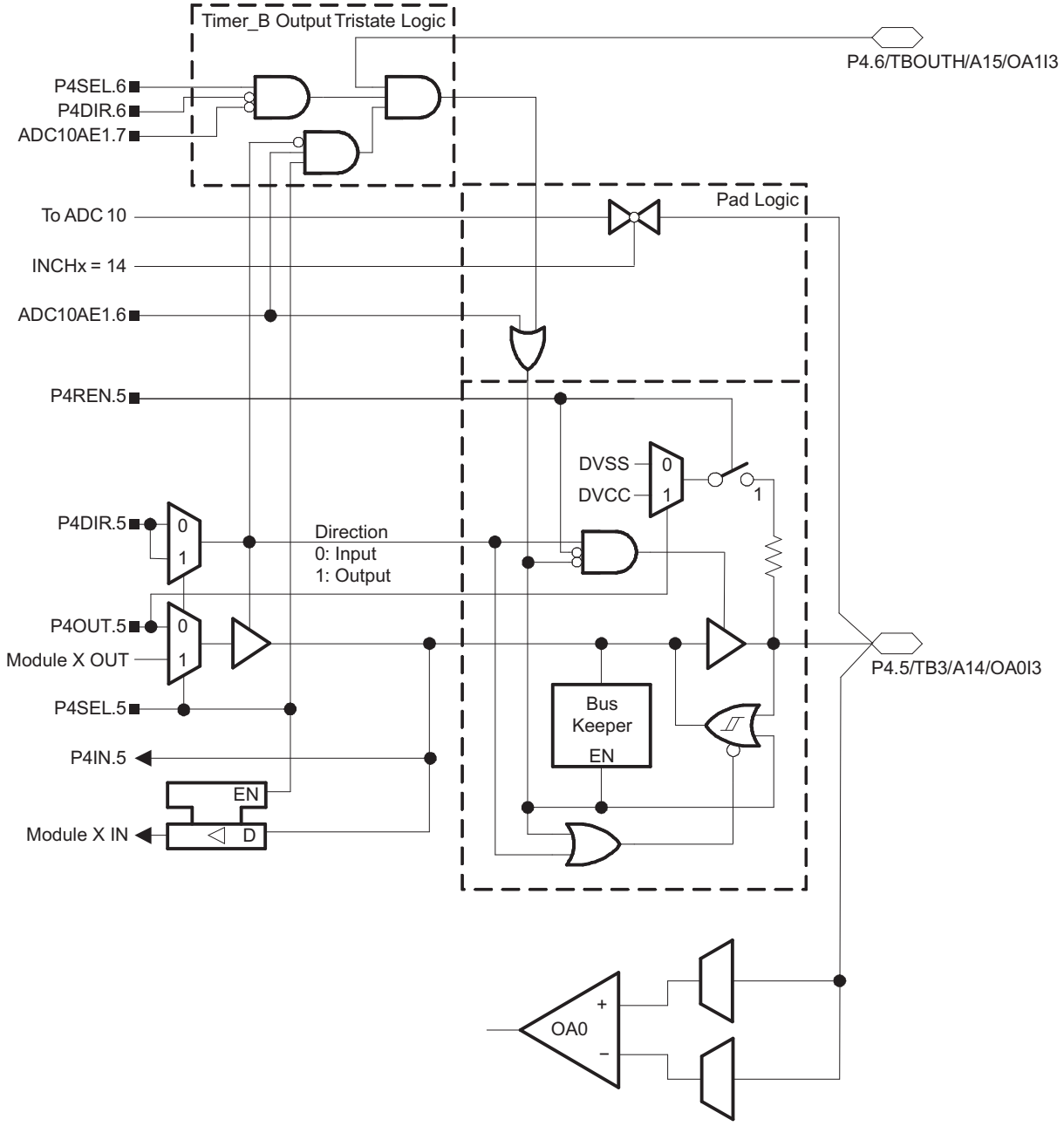

Table 36. Port P4 (P4.5) Pin Functions

PIN NAME (P4.x)	x	y	FUNCTION	CONTROL BITS/SIGNALS[1]		
				P4DIR.x	P4SEL.x	ADC10AE1.y
P4.5/TB3/A14/OA0I3	5	6	P4.5[2] (I/O)	I: 0; O: 1	0	0
			Timer_B3.TB2	1	1	0
			A14/OA0I3[3]	X	X	1

(1) X = Don't care
(2) Default after reset (PUC/POR)
(3) Setting the ADC10AE1.y bit disables the output driver as well as the input Schmitt trigger to prevent parasitic cross currents when applying analog signals.

Copyright © 2006–2012, Texas Instruments Incorporated

Port P4 Pin Schematic: P4.6, Input/Output With Schmitt Trigger

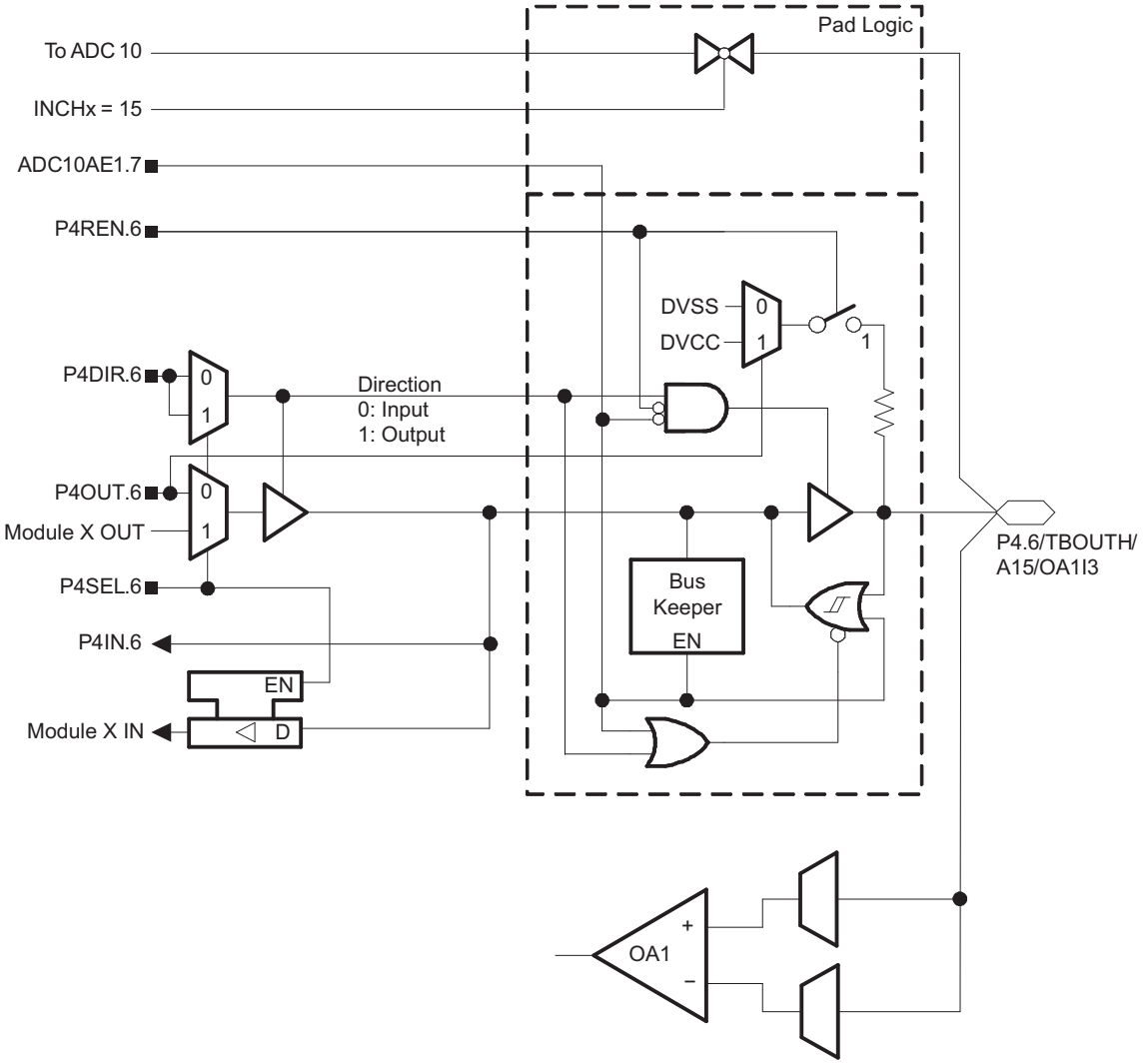

Table 37. Port P4 (P4.6) Pin Functions

PIN NAME (P4.x)	x	y	FUNCTION	CONTROL BITS/SIGNALS[1]		
				P4DIR.x	P4SEL.x	ADC10AE1.y
P4.6/TBOUTH/A15/OA1I3	6	7	P4.6[2] (I/O)	I: 0; O: 1	0	0
			TBOUTH	0	1	0
			DV_{SS}	1	1	0
			A15/OA1I3[3]	X	X	1

(1) X = Don't care
(2) Default after reset (PUC/POR)
(3) Setting the ADC10AE1.y bit disables the output driver as well as the input Schmitt trigger to prevent parasitic cross currents when applying analog signals.

Copyright © 2006–2012, Texas Instruments Incorporated

Port P4 Pin Schematic: P4.7, Input/Output With Schmitt Trigger

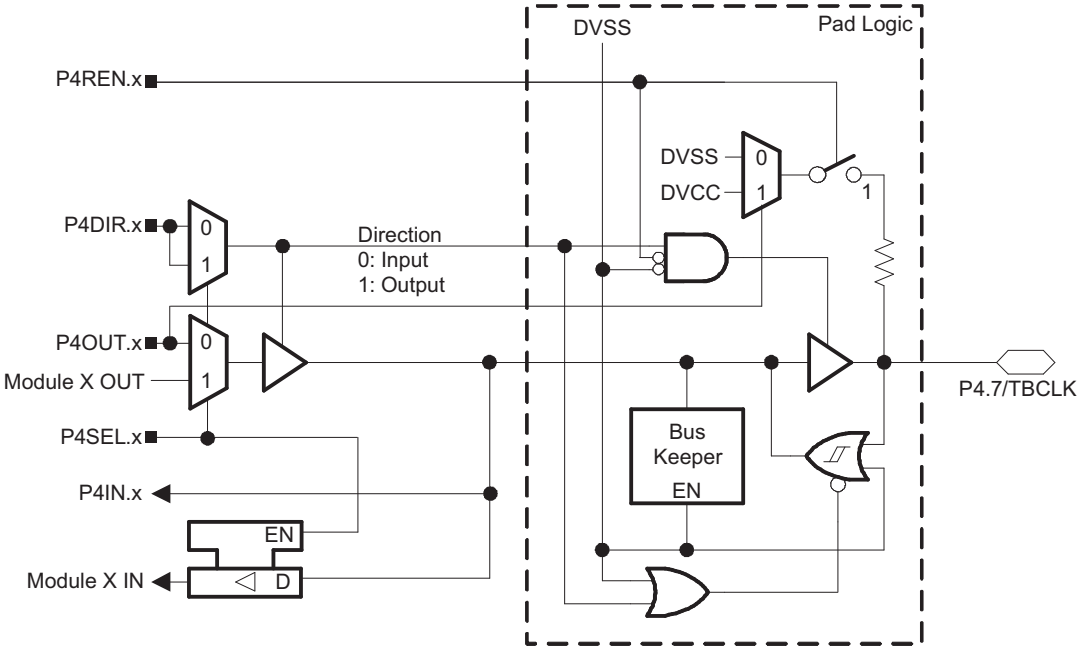

Table 38. Port P4 (Pr.7) Pin Functions

PIN NAME (P4.x)	x	FUNCTION	CONTROL BITS/SIGNALS	
			P4DIR.x	P4SEL.x
P4.7/TBCLK	7	P4.7[(1)] (I/O)	I: 0; O: 1	0
		Timer_B3.TBCLK	0	1
		DV_{SS}	1	1

(1) Default after reset (PUC/POR)

Copyright © 2006–2012, Texas Instruments Incorporated

JTAG Fuse Check Mode

MSP430 devices that have the fuse on the TEST terminal have a fuse check mode that tests the continuity of the fuse the first time the JTAG port is accessed after a power-on reset (POR). When activated, a fuse check current, I_{TF} , of 1 mA at 3 V, 2.5 mA at 5 V can flow from the TEST pin to ground if the fuse is not burned. Care must be taken to avoid accidentally activating the fuse check mode and increasing overall system power consumption.

When the TEST pin is again taken low after a test or programming session, the fuse check mode and sense currents are terminated.

Activation of the fuse check mode occurs with the first negative edge on the TMS pin after power up or if TMS is being held low during power up. The second positive edge on the TMS pin deactivates the fuse check mode. After deactivation, the fuse check mode remains inactive until another POR occurs. After each POR the fuse check mode has the potential to be activated.

The fuse check current flows only when the fuse check mode is active and the TMS pin is in a low state (see Figure 28). Therefore, the additional current flow can be prevented by holding the TMS pin high (default condition).

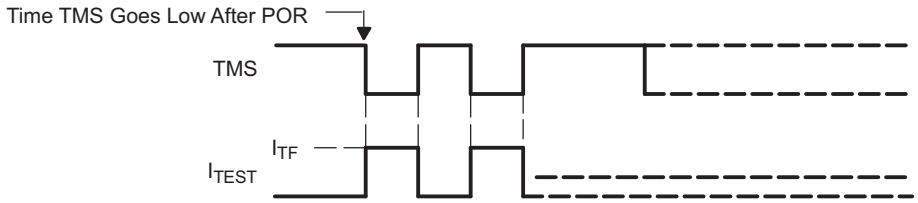

Figure 28. Fuse Check Mode Current

NOTE

The CODE and RAM data protection is ensured if the JTAG fuse is blown and the 256-bit bootloader access key is used. Also, see the Bootstrap Loader section for more information.

Copyright © 2006–2012, Texas Instruments Incorporated

REVISION HISTORY

Literature Number	Summary
SLAS504	Preliminary data sheet release
SLAS504A	Production data sheet release Updated specification and added characterization graphs Updated/corrected port pin schematics
SLAS504B	Maximum low-power mode supply current limits decreased Added note concerning f_{UCxCLK} to USCI SPI parameters
SLAS504C	Added Development Tool Support section (page 2) Changed T_{stg} for programmed devices from "-40°C to 105°C" to "-55°C to 105°C" (page 23)
SLAS504D	Corrected pin names in "Port P3 pin schematic: P3.0" and "Port P3 (P3.0) pin functions" (page 68) Corrected pin names in "Port P3 pin schematic: P3.1 to P3.5" and "Port P3 (P3.1 to P3.5) pin functions" (page 69) Corrected signal names in "Port P2 pin schematic: P2.5, input/output" (page 65) (D1) Corrected values in "x" column in "Port P3 (P3.1 to P3.5) pin functions" (page 69) (D2)
SLAS504E	Added information for YFF package
SLAS504F	Correct signal names for P3.6 and P3.7 in MSP430F22x2 pinouts – DA package, RHA package Changed Storage temperature range limit in Absolute Maximum Ratings Corrected Test Conditions in Crystal Oscillator LFXT1, High-Frequency Mode Corrected signal names in Port P1 (P1.0 to P1.3) Pin Functions Corrected typo in note 1 on Crystal Oscillator LFXT1, High-Frequency Mode table
SLAS504G	Terminal Functions tables, Corrected description of V_{REF-}/V_{eREF-}pins. Added note on TC_{REF+} in 10-Bit ADC, Built-In Voltage Reference.

Copyright © 2006–2012, Texas Instruments Incorporated

PACKAGING INFORMATION

Orderable part number	Status (1)	Material type (2)	Package | Pins	Package qty | Carrier	RoHS (3)	Lead finish/ Ball material (4)	MSL rating/ Peak reflow (5)	Op temp (°C)	Part marking (6)
MSP430F2232IDA	Active	Production	TSSOP (DA) | 38	40 | TUBE	Yes	NIPDAU	Level-2-260C-1 YEAR	-40 to 85	M430F2232
MSP430F2232IDA.B	Active	Production	TSSOP (DA) | 38	40 | TUBE	Yes	NIPDAU	Level-2-260C-1 YEAR	-40 to 85	M430F2232
MSP430F2232IDAR	Active	Production	TSSOP (DA) | 38	2000 | LARGE T&R	Yes	NIPDAU	Level-2-260C-1 YEAR	-40 to 85	M430F2232
MSP430F2232IDAR.B	Active	Production	TSSOP (DA) | 38	2000 | LARGE T&R	Yes	NIPDAU	Level-2-260C-1 YEAR	-40 to 85	M430F2232
MSP430F2232IRHAR	Active	Production	VQFN (RHA) | 40	2500 | LARGE T&R	Yes	NIPDAU	Level-3-260C-168 HR	-40 to 85	M430 F2232
MSP430F2232IRHAR.B	Active	Production	VQFN (RHA) | 40	2500 | LARGE T&R	Yes	NIPDAU	Level-3-260C-168 HR	-40 to 85	M430 F2232
MSP430F2232IRHAT	Active	Production	VQFN (RHA) | 40	250 | SMALL T&R	Yes	NIPDAU	Level-3-260C-168 HR	-40 to 85	M430 F2232
MSP430F2232IRHAT.B	Active	Production	VQFN (RHA) | 40	250 | SMALL T&R	Yes	NIPDAU	Level-3-260C-168 HR	-40 to 85	M430 F2232
MSP430F2232TDA	Active	Production	TSSOP (DA) | 38	40 | TUBE	Yes	NIPDAU	Level-2-260C-1 YEAR	-40 to 105	M430F2232T
MSP430F2232TDA.B	Active	Production	TSSOP (DA) | 38	40 | TUBE	Yes	NIPDAU	Level-2-260C-1 YEAR	-40 to 105	M430F2232T
MSP430F2232TDAR	Active	Production	TSSOP (DA) | 38	2000 | LARGE T&R	Yes	NIPDAU	Level-2-260C-1 YEAR	-40 to 105	M430F2232T
MSP430F2232TDAR.B	Active	Production	TSSOP (DA) | 38	2000 | LARGE T&R	Yes	NIPDAU	Level-2-260C-1 YEAR	-40 to 105	M430F2232T
MSP430F2232TRHAR	Active	Production	VQFN (RHA) | 40	2500 | LARGE T&R	Yes	NIPDAU	Level-3-260C-168 HR	-40 to 105	M430 F2232T
MSP430F2232TRHAR.B	Active	Production	VQFN (RHA) | 40	2500 | LARGE T&R	Yes	NIPDAU	Level-3-260C-168 HR	-40 to 105	M430 F2232T
MSP430F2232TRHAT	Active	Production	VQFN (RHA) | 40	250 | SMALL T&R	Yes	NIPDAU	Level-3-260C-168 HR	-40 to 105	M430 F2232T
MSP430F2232TRHAT.B	Active	Production	VQFN (RHA) | 40	250 | SMALL T&R	Yes	NIPDAU	Level-3-260C-168 HR	-40 to 105	M430 F2232T
MSP430F2234IDA	Active	Production	TSSOP (DA) | 38	40 | TUBE	Yes	NIPDAU	Level-2-260C-1 YEAR	-40 to 85	M430F2234
MSP430F2234IDA.B	Active	Production	TSSOP (DA) | 38	40 | TUBE	Yes	NIPDAU	Level-2-260C-1 YEAR	-40 to 85	M430F2234
MSP430F2234IDAR	Active	Production	TSSOP (DA) | 38	2000 | LARGE T&R	Yes	NIPDAU	Level-2-260C-1 YEAR	-40 to 85	M430F2234
MSP430F2234IDAR.B	Active	Production	TSSOP (DA) | 38	2000 | LARGE T&R	Yes	NIPDAU	Level-2-260C-1 YEAR	-40 to 85	M430F2234
MSP430F2234IRHAR	Active	Production	VQFN (RHA) | 40	2500 | LARGE T&R	Yes	NIPDAU	Level-3-260C-168 HR	-40 to 85	M430 F2234
MSP430F2234IRHAR.B	Active	Production	VQFN (RHA) | 40	2500 | LARGE T&R	Yes	NIPDAU	Level-3-260C-168 HR	-40 to 85	M430 F2234

Orderable part number	Status (1)	Material type (2)	Package | Pins	Package qty | Carrier	RoHS (3)	Lead finish/ Ball material (4)	MSL rating/ Peak reflow (5)	Op temp (°C)	Part marking (6)
MSP430F2234IRHAT	Active	Production	VQFN (RHA) | 40	250 | SMALL T&R	Yes	NIPDAU	Level-3-260C-168 HR	-40 to 85	M430 F2234
MSP430F2234IRHAT.B	Active	Production	VQFN (RHA) | 40	250 | SMALL T&R	Yes	NIPDAU	Level-3-260C-168 HR	-40 to 85	M430 F2234
MSP430F2234TDA	Active	Production	TSSOP (DA) | 38	40 | TUBE	Yes	NIPDAU	Level-2-260C-1 YEAR	-40 to 105	M430F2234T
MSP430F2234TDA.B	Active	Production	TSSOP (DA) | 38	40 | TUBE	Yes	NIPDAU	Level-2-260C-1 YEAR	-40 to 105	M430F2234T
MSP430F2234TDAR	Active	Production	TSSOP (DA) | 38	2000 | LARGE T&R	Yes	NIPDAU	Level-2-260C-1 YEAR	-40 to 105	M430F2234T
MSP430F2234TDAR.B	Active	Production	TSSOP (DA) | 38	2000 | LARGE T&R	Yes	NIPDAU	Level-2-260C-1 YEAR	-40 to 105	M430F2234T
MSP430F2234TRHAT	Active	Production	VQFN (RHA) | 40	250 | SMALL T&R	Yes	NIPDAU	Level-3-260C-168 HR	-40 to 105	M430 F2234T
MSP430F2234TRHAT.B	Active	Production	VQFN (RHA) | 40	250 | SMALL T&R	Yes	NIPDAU	Level-3-260C-168 HR	-40 to 105	M430 F2234T
MSP430F2252IDA	Active	Production	TSSOP (DA) | 38	40 | TUBE	Yes	NIPDAU	Level-2-260C-1 YEAR	-40 to 85	M430F2252
MSP430F2252IDA.B	Active	Production	TSSOP (DA) | 38	40 | TUBE	Yes	NIPDAU	Level-2-260C-1 YEAR	-40 to 85	M430F2252
MSP430F2252IDAR	Active	Production	TSSOP (DA) | 38	2000 | LARGE T&R	Yes	NIPDAU	Level-2-260C-1 YEAR	-40 to 85	M430F2252
MSP430F2252IDAR.B	Active	Production	TSSOP (DA) | 38	2000 | LARGE T&R	Yes	NIPDAU	Level-2-260C-1 YEAR	-40 to 85	M430F2252
MSP430F2252IRHAR	Active	Production	VQFN (RHA) | 40	2500 | LARGE T&R	Yes	NIPDAU	Level-3-260C-168 HR	-40 to 85	M430 F2252
MSP430F2252IRHAR.B	Active	Production	VQFN (RHA) | 40	2500 | LARGE T&R	Yes	NIPDAU	Level-3-260C-168 HR	-40 to 85	M430 F2252
MSP430F2252IRHARG4	Active	Production	VQFN (RHA) | 40	2500 | LARGE T&R	Yes	NIPDAU	Level-3-260C-168 HR	-40 to 105	M430 F2252
MSP430F2252IRHARG4.B	Active	Production	VQFN (RHA) | 40	2500 | LARGE T&R	Yes	NIPDAU	Level-3-260C-168 HR	-40 to 105	M430 F2252
MSP430F2252IRHAT	Active	Production	VQFN (RHA) | 40	250 | SMALL T&R	Yes	NIPDAU	Level-3-260C-168 HR	-40 to 85	M430 F2252
MSP430F2252IRHAT.B	Active	Production	VQFN (RHA) | 40	250 | SMALL T&R	Yes	NIPDAU	Level-3-260C-168 HR	-40 to 85	M430 F2252
MSP430F2252IYFFR	Active	Production	DSBGA (YFF) | 49	2500 | LARGE T&R	Yes	SNAGCU	Level-1-260C-UNLIM	-40 to 85	M430F2252
MSP430F2252IYFFR.B	Active	Production	DSBGA (YFF) | 49	2500 | LARGE T&R	Yes	SNAGCU	Level-1-260C-UNLIM	-40 to 85	M430F2252
MSP430F2252TDA	Active	Production	TSSOP (DA) | 38	40 | TUBE	Yes	NIPDAU	Level-2-260C-1 YEAR	-40 to 105	M430F2252T
MSP430F2252TDA.B	Active	Production	TSSOP (DA) | 38	40 | TUBE	Yes	NIPDAU	Level-2-260C-1 YEAR	-40 to 105	M430F2252T
MSP430F2252TDAR	Active	Production	TSSOP (DA) | 38	2000 | LARGE T&R	Yes	NIPDAU	Level-2-260C-1 YEAR	-40 to 105	M430F2252T

Orderable part number	Status (1)	Material type (2)	Package | Pins	Package qty | Carrier	RoHS (3)	Lead finish/ Ball material (4)	MSL rating/ Peak reflow (5)	Op temp (°C)	Part marking (6)
MSP430F2252TDAR.B	Active	Production	TSSOP (DA) | 38	2000 | LARGE T&R	Yes	NIPDAU	Level-2-260C-1 YEAR	-40 to 105	M430F2252T
MSP430F2252TRHAR	Active	Production	VQFN (RHA) | 40	2500 | LARGE T&R	Yes	NIPDAU	Level-3-260C-168 HR	-40 to 105	M430 F2252T
MSP430F2252TRHAR.B	Active	Production	VQFN (RHA) | 40	2500 | LARGE T&R	Yes	NIPDAU	Level-3-260C-168 HR	-40 to 105	M430 F2252T
MSP430F2252TRHAT	Active	Production	VQFN (RHA) | 40	250 | SMALL T&R	Yes	NIPDAU	Level-3-260C-168 HR	-40 to 105	M430 F2252T
MSP430F2252TRHAT.B	Active	Production	VQFN (RHA) | 40	250 | SMALL T&R	Yes	NIPDAU	Level-3-260C-168 HR	-40 to 105	M430 F2252T
MSP430F2254IDA	Active	Production	TSSOP (DA) | 38	40 | TUBE	Yes	NIPDAU	Level-2-260C-1 YEAR	-40 to 85	M430F2254
MSP430F2254IDA.B	Active	Production	TSSOP (DA) | 38	40 | TUBE	Yes	NIPDAU	Level-2-260C-1 YEAR	-40 to 85	M430F2254
MSP430F2254IDAR	Active	Production	TSSOP (DA) | 38	2000 | LARGE T&R	Yes	NIPDAU	Level-2-260C-1 YEAR	-40 to 85	M430F2254
MSP430F2254IDAR.B	Active	Production	TSSOP (DA) | 38	2000 | LARGE T&R	Yes	NIPDAU	Level-2-260C-1 YEAR	-40 to 85	M430F2254
MSP430F2254IRHAR	Active	Production	VQFN (RHA) | 40	2500 | LARGE T&R	Yes	NIPDAU	Level-3-260C-168 HR	-40 to 85	M430 F2254
MSP430F2254IRHAR.B	Active	Production	VQFN (RHA) | 40	2500 | LARGE T&R	Yes	NIPDAU	Level-3-260C-168 HR	-40 to 85	M430 F2254
MSP430F2254IRHAT	Active	Production	VQFN (RHA) | 40	250 | SMALL T&R	Yes	NIPDAU	Level-3-260C-168 HR	-40 to 85	M430 F2254
MSP430F2254IRHAT.B	Active	Production	VQFN (RHA) | 40	250 | SMALL T&R	Yes	NIPDAU	Level-3-260C-168 HR	-40 to 85	M430 F2254
MSP430F2254TDA	Active	Production	TSSOP (DA) | 38	40 | TUBE	Yes	NIPDAU	Level-2-260C-1 YEAR	-40 to 105	M430F2254T
MSP430F2254TDA.B	Active	Production	TSSOP (DA) | 38	40 | TUBE	Yes	NIPDAU	Level-2-260C-1 YEAR	-40 to 105	M430F2254T
MSP430F2254TDAR	Active	Production	TSSOP (DA) | 38	2000 | LARGE T&R	Yes	NIPDAU	Level-2-260C-1 YEAR	-40 to 105	M430F2254T
MSP430F2254TDAR.B	Active	Production	TSSOP (DA) | 38	2000 | LARGE T&R	Yes	NIPDAU	Level-2-260C-1 YEAR	-40 to 105	M430F2254T
MSP430F2254TRHAR	Active	Production	VQFN (RHA) | 40	2500 | LARGE T&R	Yes	NIPDAU	Level-3-260C-168 HR	-40 to 105	M430 F2254T
MSP430F2254TRHAR.B	Active	Production	VQFN (RHA) | 40	2500 | LARGE T&R	Yes	NIPDAU	Level-3-260C-168 HR	-40 to 105	M430 F2254T
MSP430F2254TRHAT	Active	Production	VQFN (RHA) | 40	250 | SMALL T&R	Yes	NIPDAU	Level-3-260C-168 HR	-40 to 105	M430 F2254T
MSP430F2254TRHAT.B	Active	Production	VQFN (RHA) | 40	250 | SMALL T&R	Yes	NIPDAU	Level-3-260C-168 HR	-40 to 105	M430 F2254T
MSP430F2272IDA	Active	Production	TSSOP (DA) | 38	40 | TUBE	Yes	NIPDAU	Level-2-260C-1 YEAR	-40 to 85	M430F2272

Orderable part number	Status (1)	Material type (2)	Package | Pins	Package qty | Carrier	RoHS (3)	Lead finish/ Ball material (4)	MSL rating/ Peak reflow (5)	Op temp (°C)	Part marking (6)
MSP430F2272IDA.B	Active	Production	TSSOP (DA) | 38	40 | TUBE	Yes	NIPDAU	Level-2-260C-1 YEAR	-40 to 85	M430F2272
MSP430F2272IDAR	Active	Production	TSSOP (DA) | 38	2000 | LARGE T&R	Yes	NIPDAU	Level-2-260C-1 YEAR	-40 to 85	M430F2272
MSP430F2272IDAR.B	Active	Production	TSSOP (DA) | 38	2000 | LARGE T&R	Yes	NIPDAU	Level-2-260C-1 YEAR	-40 to 85	M430F2272
MSP430F2272IDARG4	Active	Production	TSSOP (DA) | 38	2000 | LARGE T&R	Yes	NIPDAU	Level-2-260C-1 YEAR	-40 to 105	M430F2272
MSP430F2272IDARG4.B	Active	Production	TSSOP (DA) | 38	2000 | LARGE T&R	Yes	NIPDAU	Level-2-260C-1 YEAR	-40 to 105	M430F2272
MSP430F2272IRHAR	Active	Production	VQFN (RHA) | 40	2500 | LARGE T&R	Yes	NIPDAU	Level-3-260C-168 HR	-40 to 85	M430 F2272
MSP430F2272IRHAR.B	Active	Production	VQFN (RHA) | 40	2500 | LARGE T&R	Yes	NIPDAU	Level-3-260C-168 HR	-40 to 85	M430 F2272
MSP430F2272IRHAT	Active	Production	VQFN (RHA) | 40	250 | SMALL T&R	Yes	NIPDAU	Level-3-260C-168 HR	-40 to 85	M430 F2272
MSP430F2272IRHAT.B	Active	Production	VQFN (RHA) | 40	250 | SMALL T&R	Yes	NIPDAU	Level-3-260C-168 HR	-40 to 85	M430 F2272
MSP430F2272IRHATG4	Active	Production	VQFN (RHA) | 40	250 | SMALL T&R	Yes	NIPDAU	Level-3-260C-168 HR	-40 to 105	M430 F2272
MSP430F2272IRHATG4.B	Active	Production	VQFN (RHA) | 40	250 | SMALL T&R	Yes	NIPDAU	Level-3-260C-168 HR	-40 to 105	M430 F2272
MSP430F2272IYFFR	Active	Production	DSBGA (YFF) | 49	2500 | LARGE T&R	Yes	SNAGCU	Level-1-260C-UNLIM	-40 to 85	M430F2272
MSP430F2272IYFFR.B	Active	Production	DSBGA (YFF) | 49	2500 | LARGE T&R	Yes	SNAGCU	Level-1-260C-UNLIM	-40 to 85	M430F2272
MSP430F2272IYFFT	Active	Production	DSBGA (YFF) | 49	250 | SMALL T&R	Yes	SNAGCU	Level-1-260C-UNLIM	-40 to 85	M430F2272
MSP430F2272IYFFT.B	Active	Production	DSBGA (YFF) | 49	250 | SMALL T&R	Yes	SNAGCU	Level-1-260C-UNLIM	-40 to 85	M430F2272
MSP430F2272TDA	Active	Production	TSSOP (DA) | 38	40 | TUBE	Yes	NIPDAU	Level-2-260C-1 YEAR	-40 to 105	M430F2272T
MSP430F2272TDA.B	Active	Production	TSSOP (DA) | 38	40 | TUBE	Yes	NIPDAU	Level-2-260C-1 YEAR	-40 to 105	M430F2272T
MSP430F2272TDAR	Active	Production	TSSOP (DA) | 38	2000 | LARGE T&R	Yes	NIPDAU	Level-2-260C-1 YEAR	-40 to 105	M430F2272T
MSP430F2272TDAR.B	Active	Production	TSSOP (DA) | 38	2000 | LARGE T&R	Yes	NIPDAU	Level-2-260C-1 YEAR	-40 to 105	M430F2272T
MSP430F2272TRHAR	Active	Production	VQFN (RHA) | 40	2500 | LARGE T&R	Yes	NIPDAU	Level-3-260C-168 HR	-40 to 105	M430 F2272T
MSP430F2272TRHAR.B	Active	Production	VQFN (RHA) | 40	2500 | LARGE T&R	Yes	NIPDAU	Level-3-260C-168 HR	-40 to 105	M430 F2272T
MSP430F2272TRHAT	Active	Production	VQFN (RHA) | 40	250 | SMALL T&R	Yes	NIPDAU	Level-3-260C-168 HR	-40 to 105	M430 F2272T
MSP430F2272TRHAT.B	Active	Production	VQFN (RHA) | 40	250 | SMALL T&R	Yes	NIPDAU	Level-3-260C-168 HR	-40 to 105	M430 F2272T

Orderable part number	Status (1)	Material type (2)	Package | Pins	Package qty | Carrier	RoHS (3)	Lead finish/ Ball material (4)	MSL rating/ Peak reflow (5)	Op temp (°C)	Part marking (6)
MSP430F2274IDA	Active	Production	TSSOP (DA) | 38	40 | TUBE	Yes	NIPDAU	Level-2-260C-1 YEAR	-40 to 85	M430F2274
MSP430F2274IDA.B	Active	Production	TSSOP (DA) | 38	40 | TUBE	Yes	NIPDAU	Level-2-260C-1 YEAR	-40 to 85	M430F2274
MSP430F2274IDAR	Active	Production	TSSOP (DA) | 38	2000 | LARGE T&R	Yes	NIPDAU	Level-2-260C-1 YEAR	-40 to 85	M430F2274
MSP430F2274IDAR.B	Active	Production	TSSOP (DA) | 38	2000 | LARGE T&R	Yes	NIPDAU	Level-2-260C-1 YEAR	-40 to 85	M430F2274
MSP430F2274IRHAR	Active	Production	VQFN (RHA) | 40	2500 | LARGE T&R	Yes	NIPDAU	Level-3-260C-168 HR	-40 to 85	M430 F2274
MSP430F2274IRHAR.B	Active	Production	VQFN (RHA) | 40	2500 | LARGE T&R	Yes	NIPDAU	Level-3-260C-168 HR	-40 to 85	M430 F2274
MSP430F2274IRHAT	Active	Production	VQFN (RHA) | 40	250 | SMALL T&R	Yes	NIPDAU	Level-3-260C-168 HR	-40 to 85	M430 F2274
MSP430F2274IRHAT.B	Active	Production	VQFN (RHA) | 40	250 | SMALL T&R	Yes	NIPDAU	Level-3-260C-168 HR	-40 to 85	M430 F2274
MSP430F2274IYFFR	Active	Production	DSBGA (YFF) | 49	2500 | LARGE T&R	Yes	SNAGCU	Level-1-260C-UNLIM	-40 to 85	M430F2274
MSP430F2274IYFFR.B	Active	Production	DSBGA (YFF) | 49	2500 | LARGE T&R	Yes	SNAGCU	Level-1-260C-UNLIM	-40 to 85	M430F2274
MSP430F2274IYFFT	Active	Production	DSBGA (YFF) | 49	250 | SMALL T&R	Yes	SNAGCU	Level-1-260C-UNLIM	-40 to 85	M430F2274
MSP430F2274IYFFT.B	Active	Production	DSBGA (YFF) | 49	250 | SMALL T&R	Yes	SNAGCU	Level-1-260C-UNLIM	-40 to 85	M430F2274
MSP430F2274TDA	Active	Production	TSSOP (DA) | 38	40 | TUBE	Yes	NIPDAU	Level-2-260C-1 YEAR	-40 to 105	M430F2274T
MSP430F2274TDA.B	Active	Production	TSSOP (DA) | 38	40 | TUBE	Yes	NIPDAU	Level-2-260C-1 YEAR	-40 to 105	M430F2274T
MSP430F2274TDAR	Active	Production	TSSOP (DA) | 38	2000 | LARGE T&R	Yes	NIPDAU	Level-2-260C-1 YEAR	-40 to 105	M430F2274T
MSP430F2274TDAR.B	Active	Production	TSSOP (DA) | 38	2000 | LARGE T&R	Yes	NIPDAU	Level-2-260C-1 YEAR	-40 to 105	M430F2274T
MSP430F2274TRHAR	Active	Production	VQFN (RHA) | 40	2500 | LARGE T&R	Yes	NIPDAU	Level-3-260C-168 HR	-40 to 105	M430 F2274T
MSP430F2274TRHAR.B	Active	Production	VQFN (RHA) | 40	2500 | LARGE T&R	Yes	NIPDAU	Level-3-260C-168 HR	-40 to 105	M430 F2274T
MSP430F2274TRHAT	Active	Production	VQFN (RHA) | 40	250 | SMALL T&R	Yes	NIPDAU	Level-3-260C-168 HR	-40 to 105	M430 F2274T
MSP430F2274TRHAT.B	Active	Production	VQFN (RHA) | 40	250 | SMALL T&R	Yes	NIPDAU	Level-3-260C-168 HR	-40 to 105	M430 F2274T

(1) **Status:** For more details on status, see our product life cycle.

(2) **Material type:** When designated, preproduction parts are prototypes/experimental devices, and are not yet approved or released for full production. Testing and final process, including without limitation quality assurance, reliability performance testing, and/or process qualification, may not yet be complete, and this item is subject to further changes or possible discontinuation. If available for ordering, purchases will be subject to an additional waiver at checkout, and are intended for early internal evaluation purposes only. These items are sold without warranties of any kind.

(3) **RoHS values:** Yes, No, RoHS Exempt. See the TI RoHS Statement for additional information and value definition.

(4) **Lead finish/Ball material:** Parts may have multiple material finish options. Finish options are separated by a vertical ruled line. Lead finish/Ball material values may wrap to two lines if the finish value exceeds the maximum column width.

(5) **MSL rating/Peak reflow:** The moisture sensitivity level ratings and peak solder (reflow) temperatures. In the event that a part has multiple moisture sensitivity ratings, only the lowest level per JEDEC standards is shown. Refer to the shipping label for the actual reflow temperature that will be used to mount the part to the printed circuit board.

(6) **Part marking:** There may be an additional marking, which relates to the logo, the lot trace code information, or the environmental category of the part.

Multiple part markings will be inside parentheses. Only one part marking contained in parentheses and separated by a "~" will appear on a part. If a line is indented then it is a continuation of the previous line and the two combined represent the entire part marking for that device.

Important Information and Disclaimer: The information provided on this page represents TI's knowledge and belief as of the date that it is provided. TI bases its knowledge and belief on information provided by third parties, and makes no representation or warranty as to the accuracy of such information. Efforts are underway to better integrate information from third parties. TI has taken and continues to take reasonable steps to provide representative and accurate information but may not have conducted destructive testing or chemical analysis on incoming materials and chemicals. TI and TI suppliers consider certain information to be proprietary, and thus CAS numbers and other limited information may not be available for release.

In no event shall TI's liability arising out of such information exceed the total purchase price of the TI part(s) at issue in this document sold by TI to Customer on an annual basis.

OTHER QUALIFIED VERSIONS OF MSP430F2252, MSP430F2272, MSP430F2274 :

- Automotive : MSP430F2252-Q1, MSP430F2272-Q1
- Enhanced Product : MSP430F2274-EP

NOTE: Qualified Version Definitions:

- Automotive - Q100 devices qualified for high-reliability automotive applications targeting zero defects
- Enhanced Product - Supports Defense, Aerospace and Medical Applications

TAPE AND REEL INFORMATION

REEL DIMENSIONS

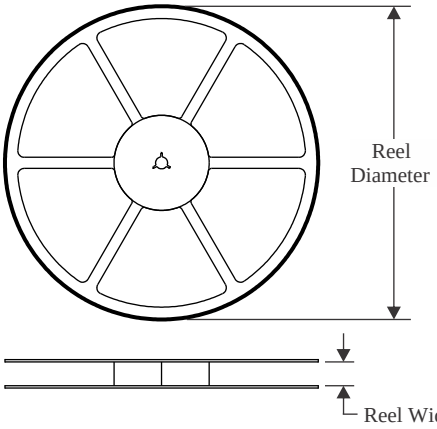

TAPE DIMENSIONS

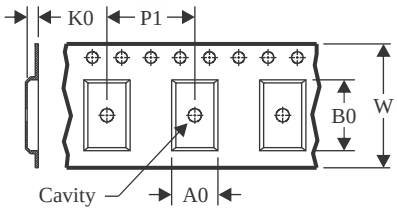

A0	Dimension designed to accommodate the component width
B0	Dimension designed to accommodate the component length
K0	Dimension designed to accommodate the component thickness
W	Overall width of the carrier tape
P1	Pitch between successive cavity centers

QUADRANT ASSIGNMENTS FOR PIN 1 ORIENTATION IN TAPE

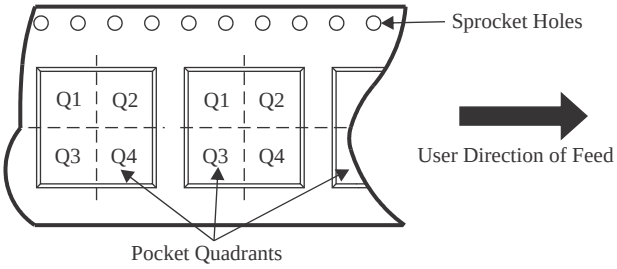

*All dimensions are nominal

Device	Package Type	Package Drawing	Pins	SPQ	Reel Diameter (mm)	Reel Width W1 (mm)	A0 (mm)	B0 (mm)	K0 (mm)	P1 (mm)	W (mm)	Pin1 Quadrant
MSP430F2232IDAR	TSSOP	DA	38	2000	330.0	24.4	8.6	13.0	1.8	12.0	24.0	Q1
MSP430F2232IRHAR	VQFN	RHA	40	2500	330.0	16.4	6.3	6.3	1.1	12.0	16.0	Q2
MSP430F2232IRHAR	VQFN	RHA	40	2500	330.0	16.4	6.3	6.3	1.1	12.0	16.0	Q2
MSP430F2232IRHAT	VQFN	RHA	40	250	180.0	16.4	6.3	6.3	1.1	12.0	16.0	Q2
MSP430F2232IRHAT	VQFN	RHA	40	250	180.0	16.4	6.3	6.3	1.1	12.0	16.0	Q2
MSP430F2232TRHAR	VQFN	RHA	40	2500	330.0	16.4	6.3	6.3	1.1	12.0	16.0	Q2
MSP430F2232TRHAR	VQFN	RHA	40	2500	330.0	16.4	6.3	6.3	1.1	12.0	16.0	Q2
MSP430F2232TRHAT	VQFN	RHA	40	250	180.0	16.4	6.3	6.3	1.1	12.0	16.0	Q2
MSP430F2232TRHAT	VQFN	RHA	40	250	180.0	16.4	6.3	6.3	1.1	12.0	16.0	Q2
MSP430F2234IDAR	TSSOP	DA	38	2000	330.0	24.4	8.6	13.0	1.8	12.0	24.0	Q1
MSP430F2234IRHAR	VQFN	RHA	40	2500	330.0	16.4	6.3	6.3	1.1	12.0	16.0	Q2
MSP430F2234IRHAR	VQFN	RHA	40	2500	330.0	16.4	6.3	6.3	1.1	12.0	16.0	Q2
MSP430F2234IRHAT	VQFN	RHA	40	250	180.0	16.4	6.3	6.3	1.1	12.0	16.0	Q2
MSP430F2234IRHAT	VQFN	RHA	40	250	180.0	16.4	6.3	6.3	1.1	12.0	16.0	Q2
MSP430F2234TRHAT	VQFN	RHA	40	250	180.0	16.4	6.3	6.3	1.1	12.0	16.0	Q2
MSP430F2234TRHAT	VQFN	RHA	40	250	180.0	16.4	6.3	6.3	1.1	12.0	16.0	Q2

Device	Package Type	Package Drawing	Pins	SPQ	Reel Diameter (mm)	Reel Width W1 (mm)	A0 (mm)	B0 (mm)	K0 (mm)	P1 (mm)	W (mm)	Pin1 Quadrant
MSP430F2252IDAR	TSSOP	DA	38	2000	330.0	24.4	8.6	13.0	1.8	12.0	24.0	Q1
MSP430F2252IRHAR	VQFN	RHA	40	2500	330.0	16.4	6.3	6.3	1.1	12.0	16.0	Q2
MSP430F2252IRHAR	VQFN	RHA	40	2500	330.0	16.4	6.3	6.3	1.1	12.0	16.0	Q2
MSP430F2252IRHARG4	VQFN	RHA	40	2500	330.0	16.4	6.3	6.3	1.1	12.0	16.0	Q2
MSP430F2252IRHAT	VQFN	RHA	40	250	180.0	16.4	6.3	6.3	1.1	12.0	16.0	Q2
MSP430F2252IRHAT	VQFN	RHA	40	250	180.0	16.4	6.3	6.3	1.1	12.0	16.0	Q2
MSP430F2252IYFFR	DSBGA	YFF	49	2500	330.0	12.4	3.5	3.7	0.81	8.0	12.0	Q2
MSP430F2252TRHAR	VQFN	RHA	40	2500	330.0	16.4	6.3	6.3	1.1	12.0	16.0	Q2
MSP430F2252TRHAR	VQFN	RHA	40	2500	330.0	16.4	6.3	6.3	1.1	12.0	16.0	Q2
MSP430F2252TRHAT	VQFN	RHA	40	250	180.0	16.4	6.3	6.3	1.1	12.0	16.0	Q2
MSP430F2252TRHAT	VQFN	RHA	40	250	180.0	16.4	6.3	6.3	1.1	12.0	16.0	Q2
MSP430F2254IDAR	TSSOP	DA	38	2000	330.0	24.4	8.6	13.0	1.8	12.0	24.0	Q1
MSP430F2254IRHAR	VQFN	RHA	40	2500	330.0	16.4	6.3	6.3	1.1	12.0	16.0	Q2
MSP430F2254IRHAR	VQFN	RHA	40	2500	330.0	16.4	6.3	6.3	1.1	12.0	16.0	Q2
MSP430F2254IRHAT	VQFN	RHA	40	250	180.0	16.4	6.3	6.3	1.1	12.0	16.0	Q2
MSP430F2254IRHAT	VQFN	RHA	40	250	180.0	16.4	6.3	6.3	1.1	12.0	16.0	Q2
MSP430F2254TRHAR	VQFN	RHA	40	2500	330.0	16.4	6.3	6.3	1.1	12.0	16.0	Q2
MSP430F2254TRHAR	VQFN	RHA	40	2500	330.0	16.4	6.3	6.3	1.1	12.0	16.0	Q2
MSP430F2254TRHAT	VQFN	RHA	40	250	180.0	16.4	6.3	6.3	1.1	12.0	16.0	Q2
MSP430F2254TRHAT	VQFN	RHA	40	250	180.0	16.4	6.3	6.3	1.1	12.0	16.0	Q2
MSP430F2272IDAR	TSSOP	DA	38	2000	330.0	24.4	8.6	13.0	1.8	12.0	24.0	Q1
MSP430F2272IDARG4	TSSOP	DA	38	2000	330.0	24.4	8.6	13.0	1.8	12.0	24.0	Q1
MSP430F2272IRHAR	VQFN	RHA	40	2500	330.0	16.4	6.3	6.3	1.1	12.0	16.0	Q2
MSP430F2272IRHAR	VQFN	RHA	40	2500	330.0	16.4	6.3	6.3	1.1	12.0	16.0	Q2
MSP430F2272IRHAT	VQFN	RHA	40	250	180.0	16.4	6.3	6.3	1.1	12.0	16.0	Q2
MSP430F2272IRHAT	VQFN	RHA	40	250	180.0	16.4	6.3	6.3	1.1	12.0	16.0	Q2
MSP430F2272IRHATG4	VQFN	RHA	40	250	180.0	16.4	6.3	6.3	1.1	12.0	16.0	Q2
MSP430F2272IYFFR	DSBGA	YFF	49	2500	330.0	12.4	3.5	3.7	0.81	8.0	12.0	Q2
MSP430F2272IYFFT	DSBGA	YFF	49	250	180.0	12.4	3.5	3.7	0.81	8.0	12.0	Q2
MSP430F2272TDAR	TSSOP	DA	38	2000	330.0	24.4	8.6	13.0	1.8	12.0	24.0	Q1
MSP430F2272TRHAR	VQFN	RHA	40	2500	330.0	16.4	6.3	6.3	1.1	12.0	16.0	Q2
MSP430F2272TRHAR	VQFN	RHA	40	2500	330.0	16.4	6.3	6.3	1.1	12.0	16.0	Q2
MSP430F2272TRHAT	VQFN	RHA	40	250	180.0	16.4	6.3	6.3	1.1	12.0	16.0	Q2
MSP430F2272TRHAT	VQFN	RHA	40	250	180.0	16.4	6.3	6.3	1.1	12.0	16.0	Q2
MSP430F2274IDAR	TSSOP	DA	38	2000	330.0	24.4	8.6	13.0	1.8	12.0	24.0	Q1
MSP430F2274IRHAR	VQFN	RHA	40	2500	330.0	16.4	6.3	6.3	1.1	12.0	16.0	Q2
MSP430F2274IRHAR	VQFN	RHA	40	2500	330.0	16.4	6.3	6.3	1.1	12.0	16.0	Q2
MSP430F2274IRHAT	VQFN	RHA	40	250	180.0	16.4	6.3	6.3	1.1	12.0	16.0	Q2
MSP430F2274IRHAT	VQFN	RHA	40	250	180.0	16.4	6.3	6.3	1.1	12.0	16.0	Q2
MSP430F2274IYFFR	DSBGA	YFF	49	2500	330.0	12.4	3.5	3.7	0.81	8.0	12.0	Q2
MSP430F2274IYFFT	DSBGA	YFF	49	250	180.0	12.4	3.5	3.7	0.81	8.0	12.0	Q2

Device	Package Type	Package Drawing	Pins	SPQ	Reel Diameter (mm)	Reel Width W1 (mm)	A0 (mm)	B0 (mm)	K0 (mm)	P1 (mm)	W (mm)	Pin1 Quadrant
MSP430F2274TRHAR	VQFN	RHA	40	2500	330.0	16.4	6.3	6.3	1.1	12.0	16.0	Q2
MSP430F2274TRHAR	VQFN	RHA	40	2500	330.0	16.4	6.3	6.3	1.1	12.0	16.0	Q2
MSP430F2274TRHAT	VQFN	RHA	40	250	180.0	16.4	6.3	6.3	1.1	12.0	16.0	Q2
MSP430F2274TRHAT	VQFN	RHA	40	250	180.0	16.4	6.3	6.3	1.1	12.0	16.0	Q2

TAPE AND REEL BOX DIMENSIONS

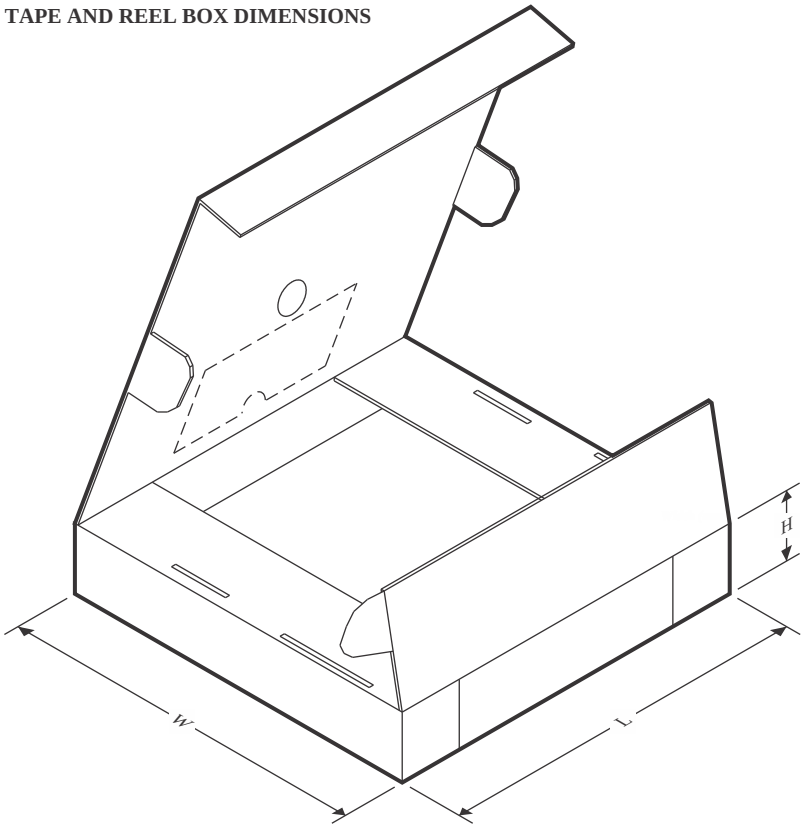

*All dimensions are nominal

Device	Package Type	Package Drawing	Pins	SPQ	Length (mm)	Width (mm)	Height (mm)
MSP430F2232IDAR	TSSOP	DA	38	2000	350.0	350.0	43.0
MSP430F2232IRHAR	VQFN	RHA	40	2500	360.0	360.0	36.0
MSP430F2232IRHAR	VQFN	RHA	40	2500	367.0	367.0	38.0
MSP430F2232IRHAT	VQFN	RHA	40	250	210.0	185.0	35.0
MSP430F2232IRHAT	VQFN	RHA	40	250	210.0	185.0	35.0
MSP430F2232TRHAR	VQFN	RHA	40	2500	367.0	367.0	38.0
MSP430F2232TRHAR	VQFN	RHA	40	2500	360.0	360.0	36.0
MSP430F2232TRHAT	VQFN	RHA	40	250	210.0	185.0	35.0
MSP430F2232TRHAT	VQFN	RHA	40	250	210.0	185.0	35.0
MSP430F2234IDAR	TSSOP	DA	38	2000	350.0	350.0	43.0
MSP430F2234IRHAR	VQFN	RHA	40	2500	367.0	367.0	38.0
MSP430F2234IRHAR	VQFN	RHA	40	2500	360.0	360.0	36.0
MSP430F2234IRHAT	VQFN	RHA	40	250	210.0	185.0	35.0
MSP430F2234IRHAT	VQFN	RHA	40	250	210.0	185.0	35.0
MSP430F2234TRHAT	VQFN	RHA	40	250	210.0	185.0	35.0
MSP430F2234TRHAT	VQFN	RHA	40	250	210.0	185.0	35.0
MSP430F2252IDAR	TSSOP	DA	38	2000	350.0	350.0	43.0
MSP430F2252IRHAR	VQFN	RHA	40	2500	360.0	360.0	36.0

Device	Package Type	Package Drawing	Pins	SPQ	Length (mm)	Width (mm)	Height (mm)
MSP430F2252IRHAR	VQFN	RHA	40	2500	367.0	367.0	38.0
MSP430F2252IRHARG4	VQFN	RHA	40	2500	367.0	367.0	38.0
MSP430F2252IRHAT	VQFN	RHA	40	250	210.0	185.0	35.0
MSP430F2252IRHAT	VQFN	RHA	40	250	210.0	185.0	35.0
MSP430F2252IYFFR	DSBGA	YFF	49	2500	335.0	335.0	25.0
MSP430F2252TRHAR	VQFN	RHA	40	2500	367.0	367.0	38.0
MSP430F2252TRHAR	VQFN	RHA	40	2500	360.0	360.0	36.0
MSP430F2252TRHAT	VQFN	RHA	40	250	210.0	185.0	35.0
MSP430F2252TRHAT	VQFN	RHA	40	250	210.0	185.0	35.0
MSP430F2254IDAR	TSSOP	DA	38	2000	350.0	350.0	43.0
MSP430F2254IRHAR	VQFN	RHA	40	2500	367.0	367.0	38.0
MSP430F2254IRHAR	VQFN	RHA	40	2500	360.0	360.0	36.0
MSP430F2254IRHAT	VQFN	RHA	40	250	210.0	185.0	35.0
MSP430F2254IRHAT	VQFN	RHA	40	250	210.0	185.0	35.0
MSP430F2254TRHAR	VQFN	RHA	40	2500	360.0	360.0	36.0
MSP430F2254TRHAR	VQFN	RHA	40	2500	367.0	367.0	38.0
MSP430F2254TRHAT	VQFN	RHA	40	250	210.0	185.0	35.0
MSP430F2254TRHAT	VQFN	RHA	40	250	210.0	185.0	35.0
MSP430F2272IDAR	TSSOP	DA	38	2000	350.0	350.0	43.0
MSP430F2272IDARG4	TSSOP	DA	38	2000	350.0	350.0	43.0
MSP430F2272IRHAR	VQFN	RHA	40	2500	367.0	367.0	38.0
MSP430F2272IRHAR	VQFN	RHA	40	2500	360.0	360.0	36.0
MSP430F2272IRHAT	VQFN	RHA	40	250	210.0	185.0	35.0
MSP430F2272IRHAT	VQFN	RHA	40	250	210.0	185.0	35.0
MSP430F2272IRHATG4	VQFN	RHA	40	250	210.0	185.0	35.0
MSP430F2272IYFFR	DSBGA	YFF	49	2500	335.0	335.0	25.0
MSP430F2272IYFFT	DSBGA	YFF	49	250	182.0	182.0	20.0
MSP430F2272TDAR	TSSOP	DA	38	2000	350.0	350.0	43.0
MSP430F2272TRHAR	VQFN	RHA	40	2500	367.0	367.0	38.0
MSP430F2272TRHAR	VQFN	RHA	40	2500	360.0	360.0	36.0
MSP430F2272TRHAT	VQFN	RHA	40	250	210.0	185.0	35.0
MSP430F2272TRHAT	VQFN	RHA	40	250	210.0	185.0	35.0
MSP430F2274IDAR	TSSOP	DA	38	2000	350.0	350.0	43.0
MSP430F2274IRHAR	VQFN	RHA	40	2500	360.0	360.0	36.0
MSP430F2274IRHAR	VQFN	RHA	40	2500	367.0	367.0	38.0
MSP430F2274IRHAT	VQFN	RHA	40	250	210.0	185.0	35.0
MSP430F2274IRHAT	VQFN	RHA	40	250	210.0	185.0	35.0
MSP430F2274IYFFR	DSBGA	YFF	49	2500	335.0	335.0	25.0
MSP430F2274IYFFT	DSBGA	YFF	49	250	182.0	182.0	20.0
MSP430F2274TRHAR	VQFN	RHA	40	2500	367.0	367.0	38.0
MSP430F2274TRHAR	VQFN	RHA	40	2500	360.0	360.0	36.0
MSP430F2274TRHAT	VQFN	RHA	40	250	210.0	185.0	35.0
MSP430F2274TRHAT	VQFN	RHA	40	250	210.0	185.0	35.0

TUBE

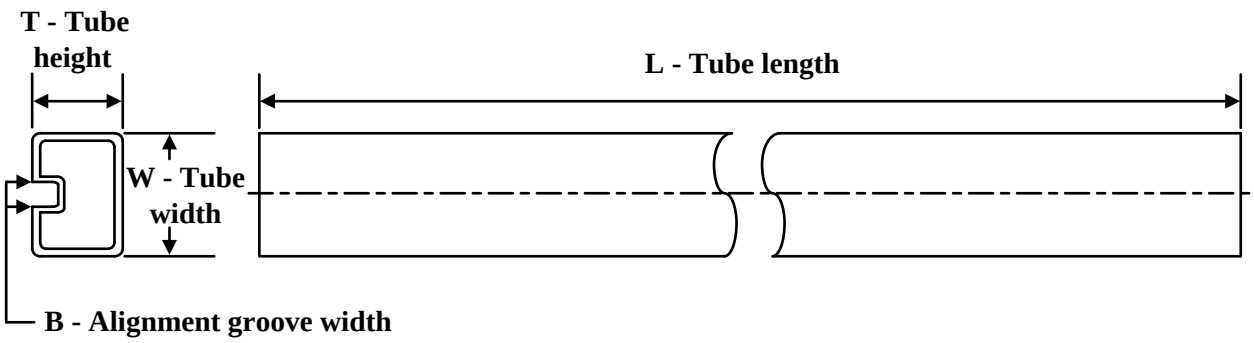

*All dimensions are nominal

Device	Package Name	Package Type	Pins	SPQ	L (mm)	W (mm)	T (µm)	B (mm)
MSP430F2232IDA	DA	TSSOP	38	40	530	11.89	3600	4.9
MSP430F2232IDA.B	DA	TSSOP	38	40	530	11.89	3600	4.9
MSP430F2232TDA	DA	TSSOP	38	40	530	11.89	3600	4.9
MSP430F2232TDA.B	DA	TSSOP	38	40	530	11.89	3600	4.9
MSP430F2234IDA	DA	TSSOP	38	40	530	11.89	3600	4.9
MSP430F2234IDA.B	DA	TSSOP	38	40	530	11.89	3600	4.9
MSP430F2234TDA	DA	TSSOP	38	40	530	11.89	3600	4.9
MSP430F2234TDA.B	DA	TSSOP	38	40	530	11.89	3600	4.9
MSP430F2252IDA	DA	TSSOP	38	40	530	11.89	3600	4.9
MSP430F2252IDA.B	DA	TSSOP	38	40	530	11.89	3600	4.9
MSP430F2252TDA	DA	TSSOP	38	40	530	11.89	3600	4.9
MSP430F2252TDA.B	DA	TSSOP	38	40	530	11.89	3600	4.9
MSP430F2254IDA	DA	TSSOP	38	40	530	11.89	3600	4.9
MSP430F2254IDA.B	DA	TSSOP	38	40	530	11.89	3600	4.9
MSP430F2254TDA	DA	TSSOP	38	40	530	11.89	3600	4.9
MSP430F2254TDA.B	DA	TSSOP	38	40	530	11.89	3600	4.9
MSP430F2272IDA	DA	TSSOP	38	40	530	11.89	3600	4.9
MSP430F2272IDA.B	DA	TSSOP	38	40	530	11.89	3600	4.9
MSP430F2272TDA	DA	TSSOP	38	40	530	11.89	3600	4.9
MSP430F2272TDA.B	DA	TSSOP	38	40	530	11.89	3600	4.9
MSP430F2274IDA	DA	TSSOP	38	40	530	11.89	3600	4.9
MSP430F2274IDA.B	DA	TSSOP	38	40	530	11.89	3600	4.9
MSP430F2274TDA	DA	TSSOP	38	40	530	11.89	3600	4.9
MSP430F2274TDA.B	DA	TSSOP	38	40	530	11.89	3600	4.9

DA (R–PDSO–G**) PLASTIC SMALL–OUTLINE PACKAGE

38 PIN SHOWN

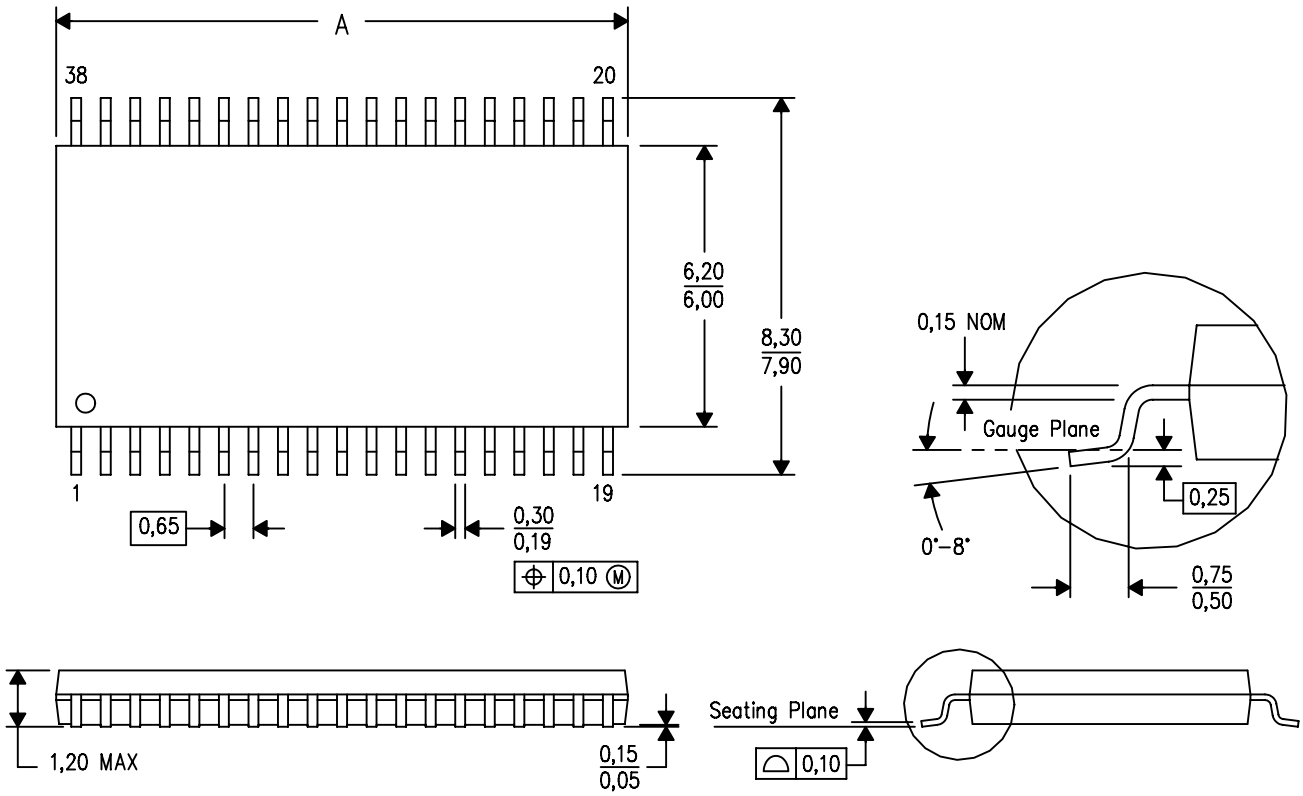

DIM \ PINS **	30	32	38
A MAX	11,10	11,10	12,60
A MIN	10,90	10,90	12,40
D MO–153 Variation	DB–1	DC	DD–1

4040066/F 01/2009

NOTES:
A. All linear dimensions are in millimeters.
B. This drawing is subject to change without notice.
C. Body dimensions do not include mold flash or protrusion. Mold flash and protrusion shall not exceed 0.15 per side.
D. Falls within JEDEC MO–153, except 30 pin body length.

DA (R-PDSO-G38) PLASTIC SMALL OUTLINE

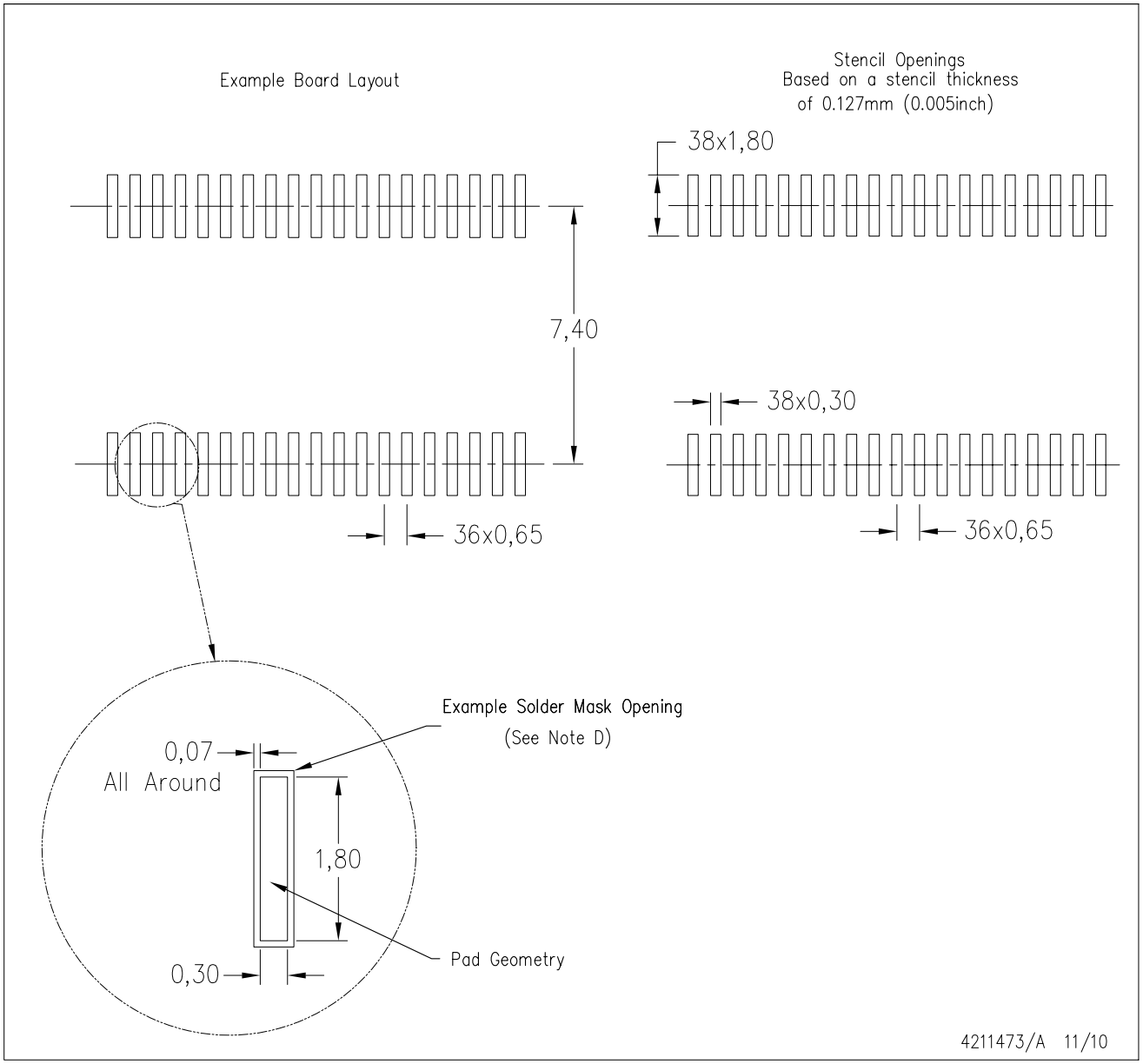

NOTES:
A. All linear dimensions are in millimeters.
B. This drawing is subject to change without notice.
C. Laser cutting apertures with trapezoidal walls and also rounding corners will offer better paste release. Customers should contact their board assembly site for stencil design recommendations. Example stencil design based on a 50% volumetric metal load solder paste. Refer to IPC-7525 for other stencil recommendations.
D. Contact the board fabrication site for recommended soldermask tolerances.

GENERIC PACKAGE VIEW

RHA 40

VQFN - 1 mm max height

6 x 6, 0.5 mm pitch

PLASTIC QUAD FLATPACK - NO LEAD

This image is a representation of the package family, actual package may vary.
Refer to the product data sheet for package details.

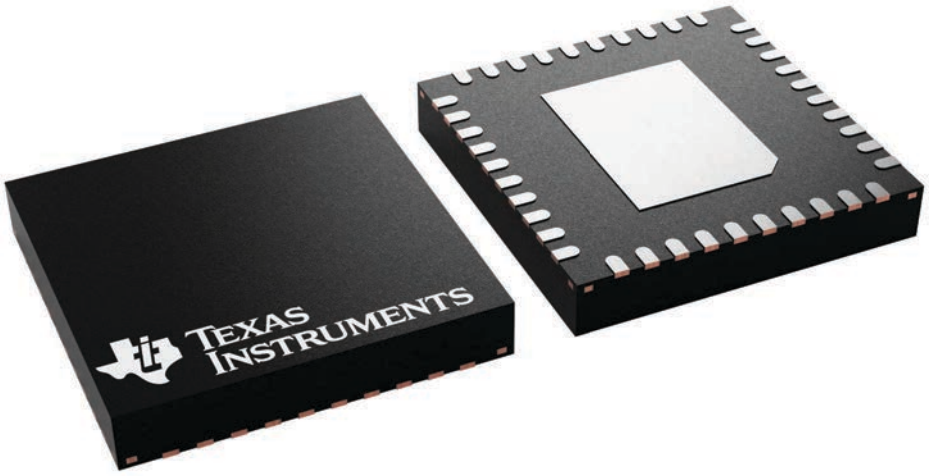

4225870/A

PACKAGE OUTLINE

RHA0040B

VQFN - 1 mm max height

PLASTIC QUAD FLATPACK - NO LEAD

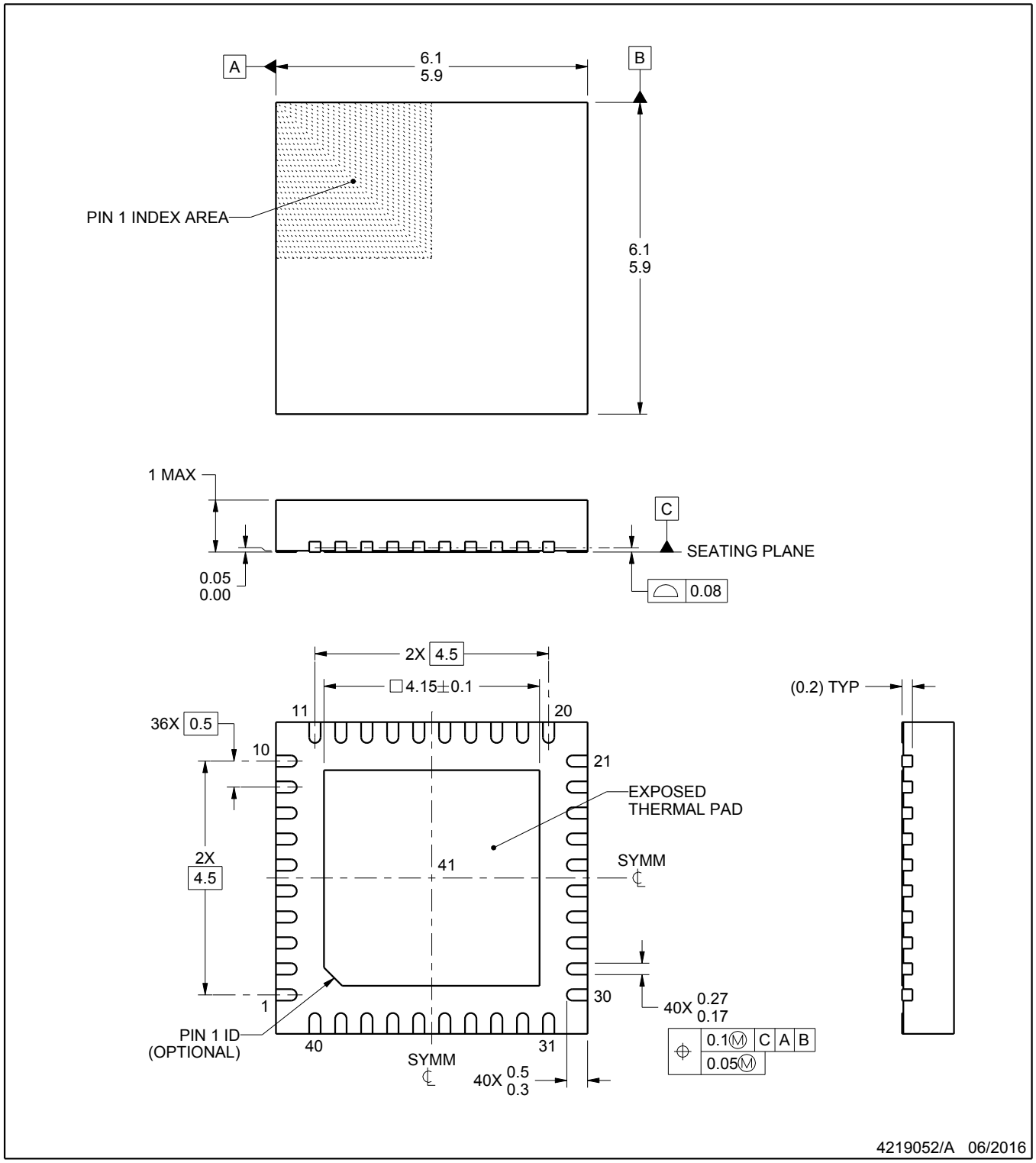

NOTES:

1. All linear dimensions are in millimeters. Any dimensions in parenthesis are for reference only. Dimensioning and tolerancing per ASME Y14.5M.
2. This drawing is subject to change without notice.
3. The package thermal pad must be soldered to the printed circuit board for thermal and mechanical performance.

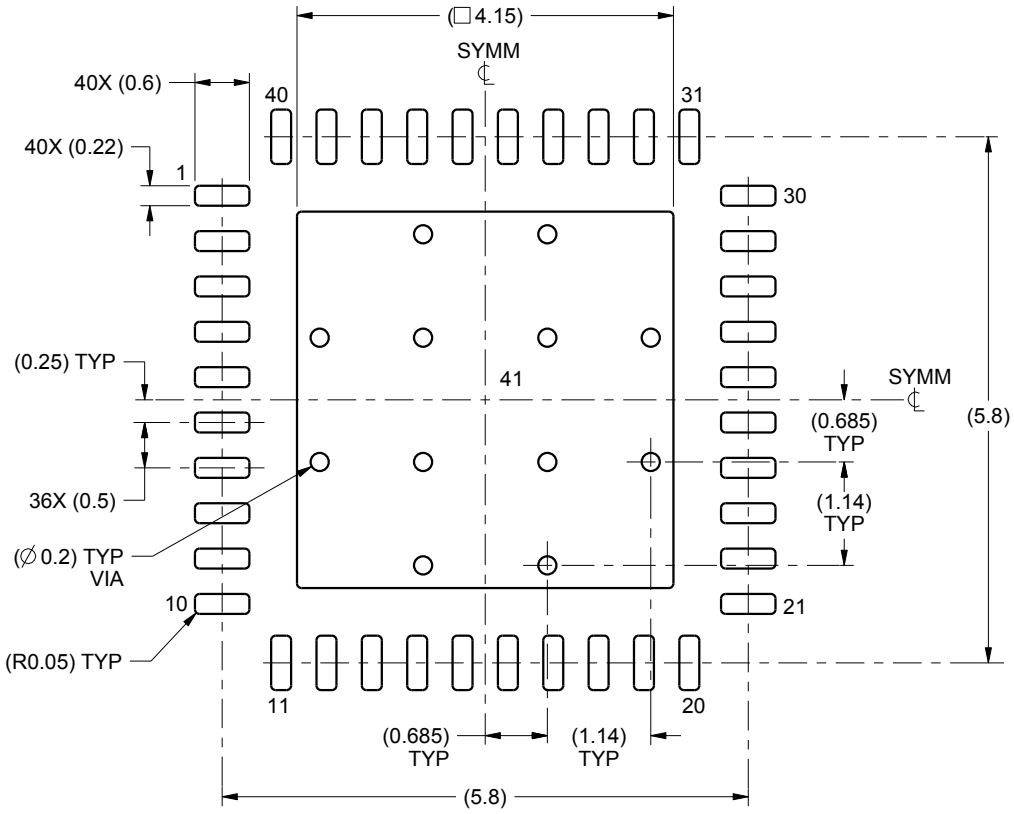

LAND PATTERN EXAMPLE
SCALE:12X

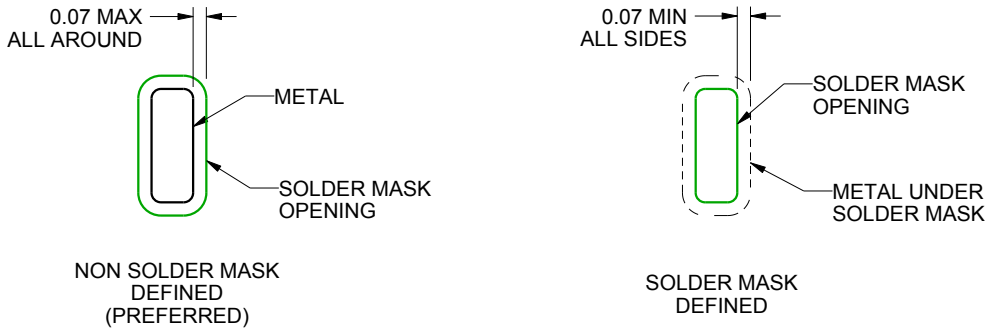

SOLDER MASK DETAILS

4219052/A 06/2016

NOTES: (continued)

4. This package is designed to be soldered to a thermal pad on the board. For more information, see Texas Instruments literature number SLUA271 (www.ti.com/lit/slua271).

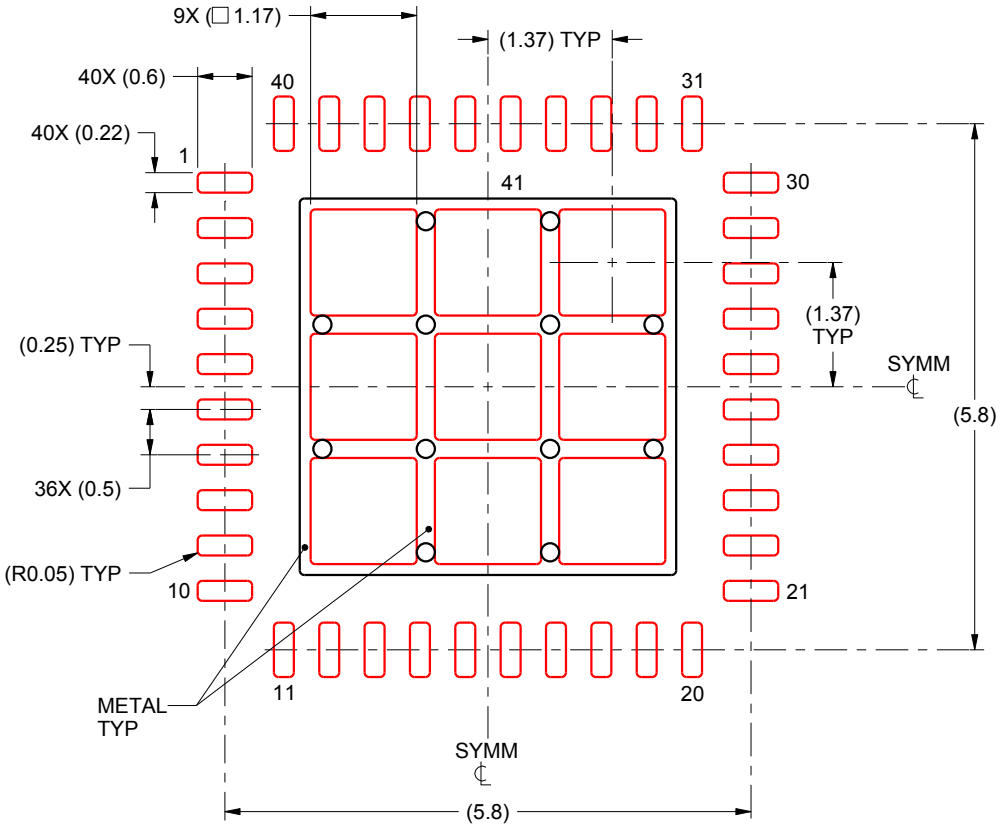

SOLDER PASTE EXAMPLE
BASED ON 0.125 mm THICK STENCIL

EXPOSED PAD 41:
72% PRINTED SOLDER COVERAGE BY AREA UNDER PACKAGE
SCALE:12X

4219052/A 06/2016

NOTES: (continued)

5. Laser cutting apertures with trapezoidal walls and rounded corners may offer better paste release. IPC-7525 may have alternate design recommendations.

YFF (R–XBGA–N49) DIE–SIZE BALL GRID ARRAY

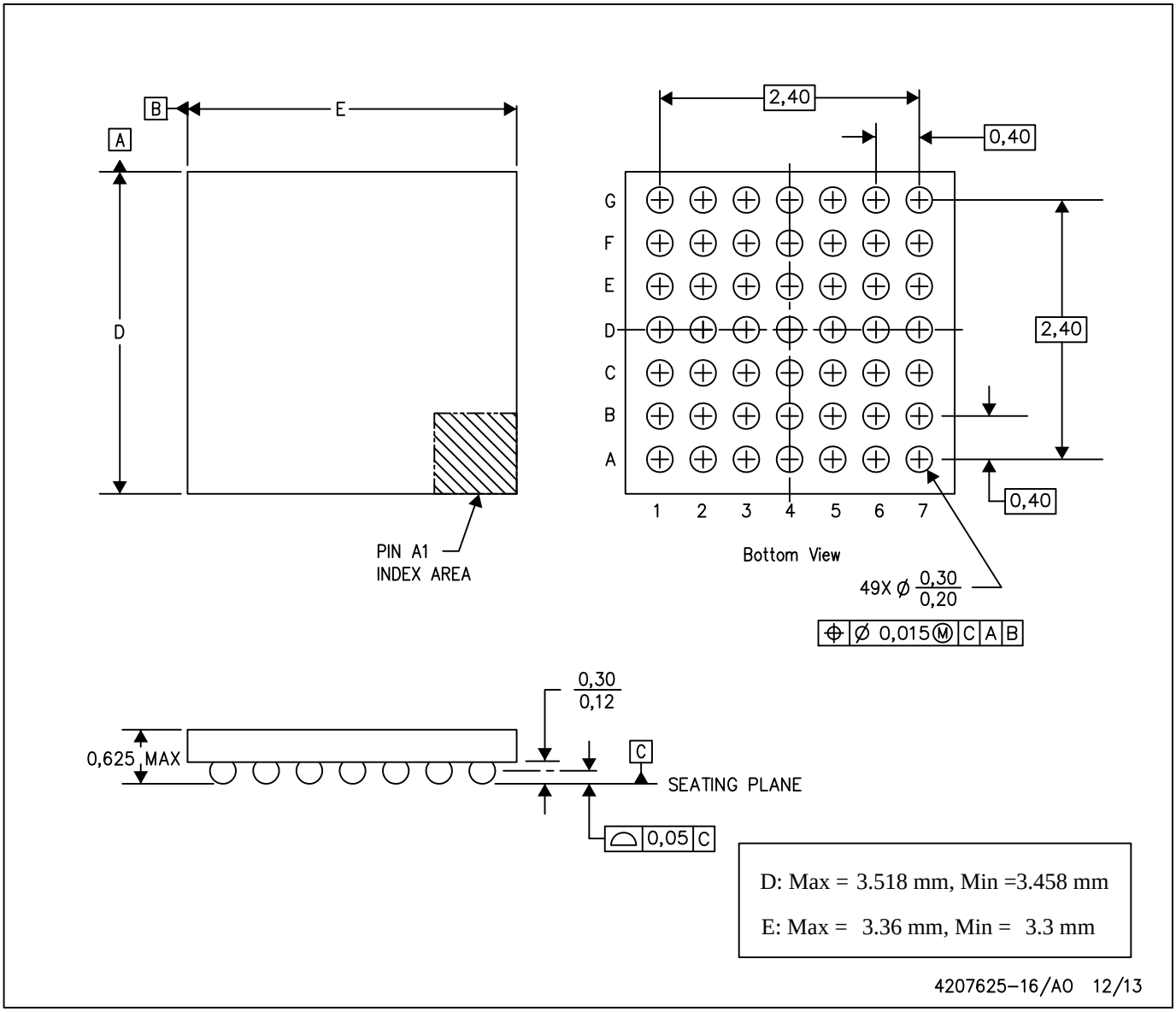

NOTES: A. All linear dimensions are in millimeters. Dimensioning and tolerancing per ASME Y14.5M–1994.
B. This drawing is subject to change without notice.
C. NanoFree™ package configuration.

NanoFree is a trademark of Texas Instruments.

IMPORTANT NOTICE AND DISCLAIMER

TI PROVIDES TECHNICAL AND RELIABILITY DATA (INCLUDING DATASHEETS), DESIGN RESOURCES (INCLUDING REFERENCE DESIGNS), APPLICATION OR OTHER DESIGN ADVICE, WEB TOOLS, SAFETY INFORMATION, AND OTHER RESOURCES “AS IS” AND WITH ALL FAULTS, AND DISCLAIMS ALL WARRANTIES, EXPRESS AND IMPLIED, INCLUDING WITHOUT LIMITATION ANY IMPLIED WARRANTIES OF MERCHANTABILITY, FITNESS FOR A PARTICULAR PURPOSE OR NON-INFRINGEMENT OF THIRD PARTY INTELLECTUAL PROPERTY RIGHTS.

These resources are intended for skilled developers designing with TI products. You are solely responsible for (1) selecting the appropriate TI products for your application, (2) designing, validating and testing your application, and (3) ensuring your application meets applicable standards, and any other safety, security, regulatory or other requirements.

These resources are subject to change without notice. TI grants you permission to use these resources only for development of an application that uses the TI products described in the resource. Other reproduction and display of these resources is prohibited. No license is granted to any other TI intellectual property right or to any third party intellectual property right. TI disclaims responsibility for, and you fully indemnify TI and its representatives against any claims, damages, costs, losses, and liabilities arising out of your use of these resources.

TI’s products are provided subject to TI’s Terms of Sale, TI’s General Quality Guidelines, or other applicable terms available either on ti.com or provided in conjunction with such TI products. TI’s provision of these resources does not expand or otherwise alter TI’s applicable warranties or warranty disclaimers for TI products. Unless TI explicitly designates a product as custom or customer-specified, TI products are standard, catalog, general purpose devices.

TI objects to and rejects any additional or different terms you may propose.

Copyright © 2026, Texas Instruments Incorporated

Last updated 10/2025