MIXED SIGNAL MICROCONTROLLER

FEATURES

- **Low Supply Voltage Range: 1.8 V to 3.6 V**
- **Ultra-Low Power Consumption**
  - **Active Mode: 270 µA at 1 MHz, 2.2 V**
  - **Standby Mode: 0.7 µA**
  - **Off Mode (RAM Retention): 0.1 µA**
- **Ultra-Fast Wake-Up From Standby Mode in Less Than 1 µs**
- **16-Bit RISC Architecture, 62.5-ns Instruction Cycle Time**
- **Basic Clock Module Configurations**
  - **Internal Frequencies up to 16 MHz With Four Calibrated Frequencies to ±1%**
  - **Internal Very-Low-Power Low-Frequency (LF) Oscillator**
  - **32-kHz Crystal**
  - **High-Frequency (HF) Crystal up to 16 MHz**
  - **Resonator**
  - **External Digital Clock Source**
  - **External Resistor**
- **16-Bit Timer_A With Three Capture/Compare Registers**
- **16-Bit Timer_B With Three Capture/Compare Registers**
- **On-Chip Comparator for Analog Signal Compare Function or Slope Analog-to-Digital (A/D) Conversion**
- **Universal Serial Communication Interface**
  - **Enhanced UART Supporting Auto Baudrate Detection (LIN)**
  - **IrDA Encoder and Decoder**
  - **Synchronous SPI**
  - **I^2C™**
- **Brownout Detector**
- **Serial Onboard Programming, No External Programming Voltage Needed, Programmable Code Protection by Security Fuse**
- **Bootstrap Loader**
- **On-Chip Emulation Module**
- **Family Members Include:**
  - **MSP430F2330**
    - **8KB + 256B Flash Memory**
    - **1KB RAM**
  - **MSP430F2350**
    - **16KB + 256B Flash Memory**
    - **2KB RAM**
  - **MSP430F2370**
    - **32KB + 256B Flash Memory**
    - **2KB RAM**
- **Available in 40-Pin QFN Package and 49-Pin Die-Sized BGA Package (See Table 1)**
- **For Complete Module Descriptions, See the *MSP430x2xx Family User's Guide* (SLAU144)**

DESCRIPTION

The Texas Instruments MSP430™ family of ultra-low-power microcontrollers consists of several devices featuring different sets of peripherals targeted for various applications. The architecture, combined with five low-power modes, is optimized to achieve extended battery life in portable measurement applications. The device features a powerful 16-bit RISC CPU, 16-bit registers, and constant generators that contribute to maximum code efficiency. The digitally controlled oscillator (DCO) allows wake-up from low-power modes to active mode in less than 1 µs.

The MSP430F23x0 series is an ultra-low-power microcontroller with two built-in 16-bit timers, one universal serial communication interface (USCI), a versatile analog comparator, and 32 I/O pins.

Please be aware that an important notice concerning availability, standard warranty, and use in critical applications of Texas Instruments semiconductor products and disclaimers thereto appears at the end of this data sheet.

MSP430 is a trademark of Texas Instruments.

PRODUCTION DATA information is current as of publication date. Products conform to specifications per the terms of the Texas Instruments standard warranty. Production processing does not necessarily include testing of all parameters.

Copyright © 2006–2011, Texas Instruments Incorporated

This integrated circuit can be damaged by ESD. Texas Instruments recommends that all integrated circuits be handled with appropriate precautions. Failure to observe proper handling and installation procedures can cause damage.

ESD damage can range from subtle performance degradation to complete device failure. Precision integrated circuits may be more susceptible to damage because very small parametric changes could cause the device not to meet its published specifications.

Table 1. Available Options

T_A	PACKAGED DEVICES(1)(2)	
	PLASTIC 49-PIN DSBGA (YFF)	PLASTIC 40-PIN QFN (RHA)
-40°C to 85°C	MSP430F2330IYFF	MSP430F2330IRHA
	MSP430F2350IYFF	MSP430F2350IRHA
	MSP430F2370IYFF	MSP430F2370IRHA
-40°C to 105°C	-	MSP430F2330TRHA
	-	MSP430F2350TRHA
	-	MSP430F2370TRHA

(1) For the most current package and ordering information, see the Package Option Addendum at the end of this document, or see the TI web site at www.ti.com.
(2) Package drawings, thermal data, and symbolization are available at www.ti.com/packaging.

Development Tool Support

All MSP430 microcontrollers include an Embedded Emulation Module (EEM) that allows advanced debugging and programming through easy-to-use development tools. Recommended hardware options include:

- Debugging and Programming Interface with Target Board
  - MSP-FET430U23X0 (RHA package)
- Debugging and Programming Interface
  - MSP-FET430UIF (USB)
  - MSP-FET430PIF (Parallel Port)
- Target Board
  - MSP-TS430QFN23X0 (RHA package)
- Production Programmer
  - MSP-GANG430

Copyright © 2006–2011, Texas Instruments Incorporated

Device Pinout, RHA Package

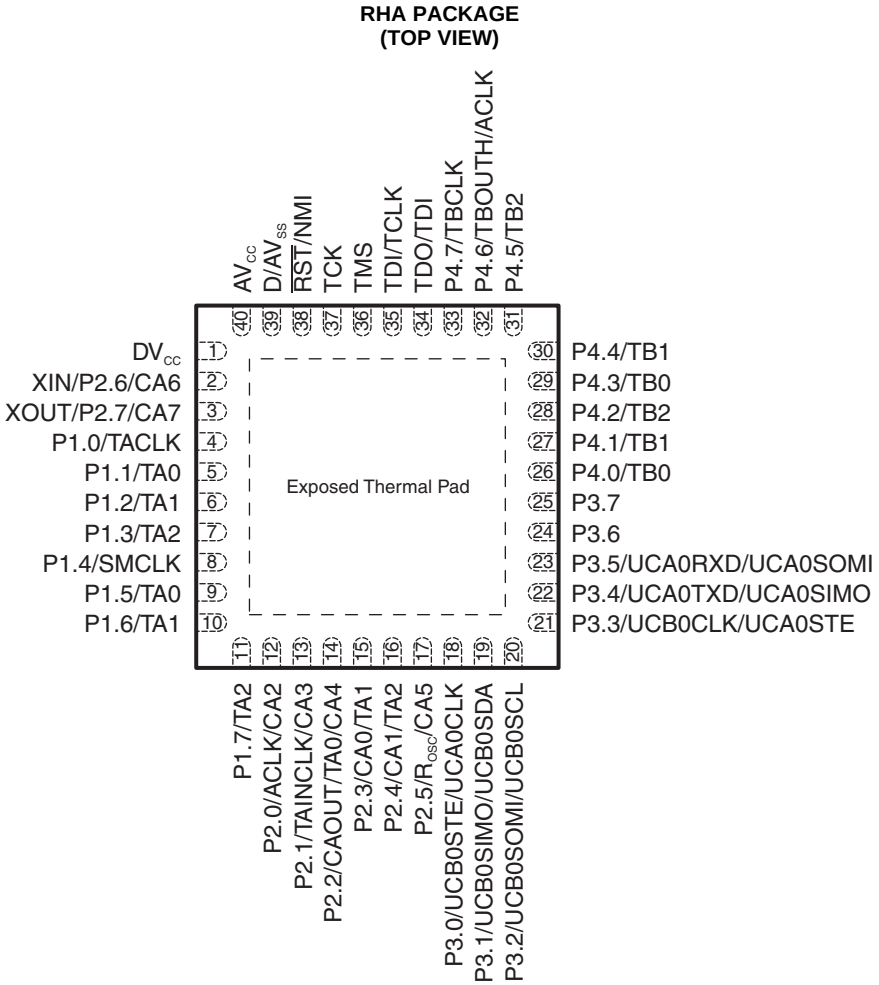

Device Pinout, YFF Package

YFF PACKAGE
(TOP VIEW)

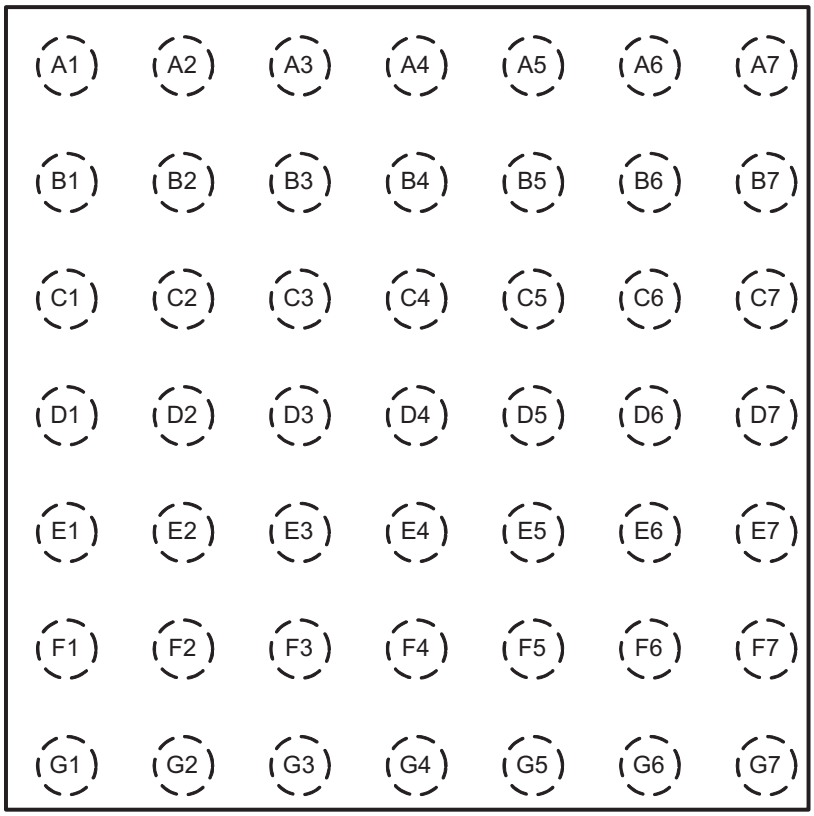

Package Dimensions

The package dimensions for this YFF package are shown in the following table. See the package drawing at the end of this data sheet for more details.

Table 2. YFF Package Dimensions

PACKAGED DEVICES	D	E
MSP430F2370IYFF MSP430F2350IYFF MSP430F2330IYFF	3.20 ± 0.05 mm	3.20 ± 0.05 mm

Copyright © 2006–2011, Texas Instruments Incorporated

Functional Block Diagram

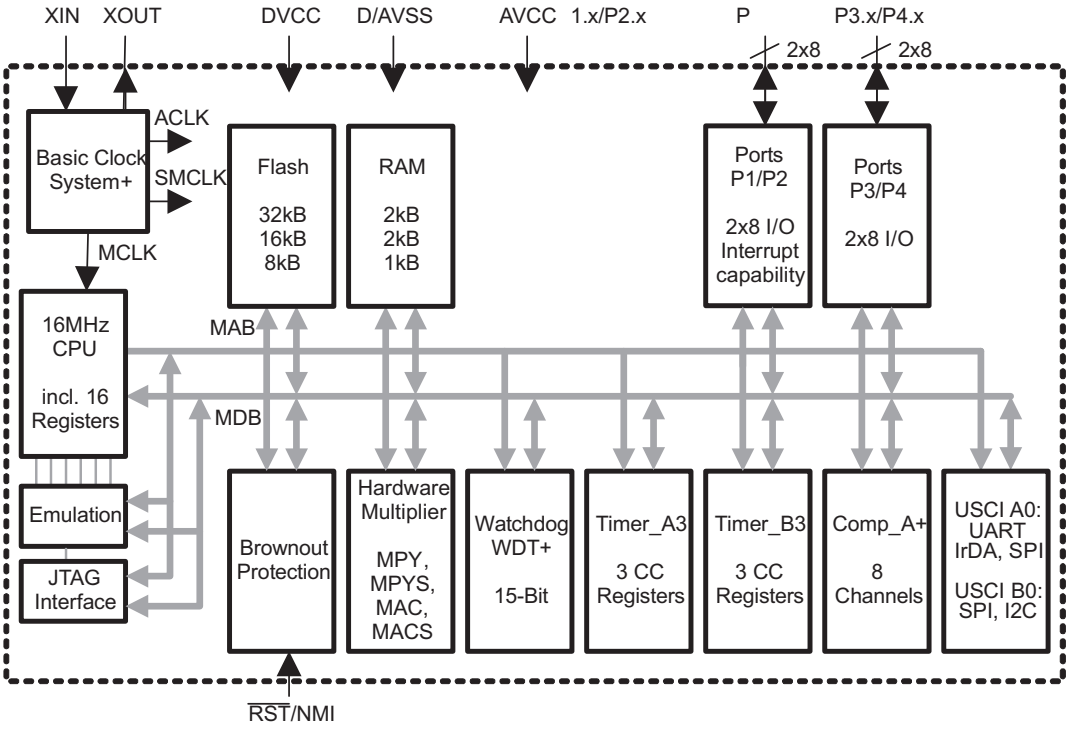

Table 3. Terminal Functions

TERMINAL				DESCRIPTION
NAME	YFF	RHA	I/O	
DV_{CC}	B3	1		Digital supply voltage, positive terminal. Supplies all digital parts.
XIN/P2.6/CA6	A2	2	I/O	Input terminal of crystal oscillator/general-purpose digital I/O pin/Comparator_A input
XOUT/P2.7/CA7	A3	3	I/O	Output terminal of crystal oscillator/general-purpose digital I/O pin/Comparator_A input
P1.0/TACLK	B4	4	I/O	General-purpose digital I/O pin/Timer_A, clock signal TACLK input
P1.1/TA0	C4	5	I/O	General-purpose digital I/O pin/Timer_A, capture: CCI0A input, compare: Out0 output
P1.2/TA1	A5	6	I/O	General-purpose digital I/O pin/Timer_A, capture: CCI1A input, compare: Out1 output
P1.3/TA2	B5	7	I/O	General-purpose digital I/O pin/Timer_A, capture: CCI2A input, compare: Out2 output
P1.4/SMCLK	A6	8	I/O	General-purpose digital I/O pin/SMCLK signal output
P1.5/TA0	B6	9	I/O	General-purpose digital I/O pin/Timer_A, compare: Out0 output
P1.6/TA1	A7	10	I/O	General-purpose digital I/O pin/Timer_A, compare: Out1 output
P1.7/TA2	B7	11	I/O	General-purpose digital I/O pin/Timer_A, compare: Out2 output
P2.0/ACLK/CA2	C5	12	I/O	General-purpose digital I/O pin/ACLK output/Comparator_A input
P2.1/TAINCLK/CA3	C7	13	I/O	General-purpose digital I/O pin/Timer_A, clock signal at INCLK/Comparator_A input
P2.2/CAOUT/TA0/CA4	C6	14	I/O	General-purpose digital I/O pin/Comparator_A output/Timer_A, capture: CCI0B input/Comparator_A input
P2.3/CA0/TA1	D7	15	I/O	General-purpose digital I/O pin/Comparator_A input/Timer_A, compare: Out1 output
P2.4/CA1/TA2	D6	16	I/O	General-purpose digital I/O pin/Comparator_A input/Timer_A, compare: Out2 output
P2.5/R_{OSC}/CA5	E7	17	I/O	General-purpose digital I/O pin/input for external resistor defining the DCO nominal frequency/Comparator_A input
P3.0/UCB0STE/ UCA0CLK	E6	18	I/O	General-purpose digital I/O pin/USCIB0 slave transmit enable/USCIA clock input/output
P3.1/UCB0SIMO/ UCB0SDA	F7	19	I/O	General-purpose digital I/O pin/USCIB0 slave in/master out in SPI mode, SDA I2C data in I2C mode
P3.2/UCB0SOMI/ UCB0SCL	F6	20	I/O	General-purpose digital I/O pin/USCIB0 slave out/master in in SPI mode, SCL I2C clock in I2C mode
P3.3/UCB0CLK/ UCA0STE	G7	21	I/O	General-purpose digital I/O/USCIB0 clock input/output, USCIA0 slave transmit enable
P3.4/UCA0TXD/ UCA0SIMO	G6	22	I/O	General-purpose digital I/O pin/USCIA0 transmit data output in UART mode, slave data in/master out in SPI mode
P3.5/UCA0RXD/ UCA0SOMI	G5	23	I/O	General-purpose digital I/O pin/USCIA0 receive data input in UART mode, slave data out/master in in SPI mode
P3.6	F5	24	I/O	General-purpose digital I/O pin
P3.7	G4	25	I/O	General-purpose digital I/O pin
P4.0/TB0	F4	26	I/O	General-purpose digital I/O pin/Timer_B, capture: CCI0A input, compare: Out0 output
P4.1/TB1	G3	27	I/O	General-purpose digital I/O pin/Timer_B, capture: CCI1A input, compare: Out1 output
P4.2/TB2	G2	28	I/O	General-purpose digital I/O pin/Timer_B, capture: CCI2A input, compare: Out2 output
P4.3/TB0	F3	29	I/O	General-purpose digital I/O pin/Timer_B, capture: CCI0B input, compare: Out0 output
P4.4/TB1	G1	30	I/O	General-purpose digital I/O pin/Timer_B, capture: CCI1B input, compare: Out1 output
P4.5/TB2	F1	31	I/O	General-purpose digital I/O pin/Timer_B, compare: Out2 output
P4.6/TBOUTH/ACLK	F2	32	I/O	General-purpose digital I/O pin/switch all PWM digital outputs to high impedance - Timer_B3: TB0 to TB2/ACLK output
P4.7/TBCLK	E2	33	I/O	General-purpose digital I/O pin/input clock TBCLK - Timer_B3
TDO/TDI	E1	34	I/O	Test data output port. TDO/TDI data output or programming data input terminal
TDI/TCLK	D1	35	I	Test data input or test clock input. The device protection fuse is connected to TDI/TCLK.
TMS	D2	36	I	Test mode select. TMS is used as an input port for device programming and test.
TCK	C1	37	I	Test clock. TCK is the clock input port for device programming and test.
$\overline{RST}$/NMI	C2	38	I	Reset input, nonmaskable interrupt input port.
D/AV_{SS}	B1	39		Digital/analog supply voltage, negative terminal

Copyright © 2006–2011, Texas Instruments Incorporated

Table 3. Terminal Functions (continued)

TERMINAL				DESCRIPTION
NAME	YFF	RHA	I/O	
AV_{CC}	A1	40		Analog supply voltage, positive terminal
QFN Pad	-	NA	NA	QFN package pad. Connection to D/AV_{SS} recommended.
Reserved	A4, B2, C3, D3, D4, D5, E3, E4, E5	-	NA	BGA package GND balls. Connection to DV_{SS}/AV_{SS} is recommended.

Copyright © 2006–2011, Texas Instruments Incorporated

SHORT-FORM DESCRIPTION

CPU

The MSP430™ CPU has a 16-bit RISC architecture that is highly transparent to the application. All operations, other than program-flow instructions, are performed as register operations in conjunction with seven addressing modes for source operand and four addressing modes for destination operand.

The CPU is integrated with 16 registers that provide reduced instruction execution time. The register-to-register operation execution time is one cycle of the CPU clock.

Four of the registers, R0 to R3, are dedicated as program counter, stack pointer, status register, and constant generator respectively. The remaining registers are general-purpose registers.

Peripherals are connected to the CPU using data, address, and control buses and can be handled with all instructions.

Instruction Set

The instruction set consists of 51 instructions with three formats and seven address modes. Each instruction can operate on word and byte data. Table 4 shows examples of the three types of instruction formats; Table 5 shows the address modes.

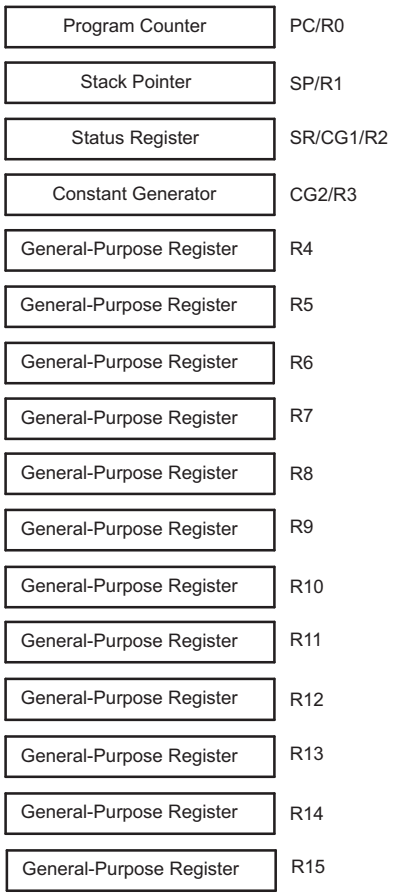

Table 4. Instruction Word Formats

INSTRUCTION FORMAT	EXAMPLE	OPERATION
Dual operands, source-destination	ADD R4,R5	R4 + R5 → R5
Single operands, destination only	CALL R8	PC → (TOS), R8 → PC
Relative jump, unconditional/conditional	JNE	Jump-on-equal bit = 0

Table 5. Address Mode Descriptions

ADDRESS MODE	S(1)	D(2)	SYNTAX	EXAMPLE	OPERATION
Register	✓	✓	MOV Rs,Rd	MOV R10,R11	R10 → R11
Indexed	✓	✓	MOV X(Rn),Y(Rm)	MOV 2(R5),6(R6)	M(2+R5) → M(6+R6)
Symbolic (PC relative)	✓	✓	MOV EDE,TONI		M(EDE) → M(TONI)
Absolute	✓	✓	MOV &MEM,&TCDAT		M(MEM) → M(TCDAT)
Indirect	✓		MOV @Rn,Y(Rm)	MOV @R10,Tab(R6)	M(R10) → M(Tab+R6)
Indirect autoincrement	✓		MOV @Rn+,Rm	MOV @R10+,R11	M(R10) → R11 R10 + 2 → R10
Immediate	✓		MOV #X,TONI	MOV #45,TONI	#45 → M(TONI)

(1) S = source
(2) D = destination

Copyright © 2006–2011, Texas Instruments Incorporated

Operating Modes

The MSP430 microcontrollers have one active mode and five software-selectable low-power modes of operation. An interrupt event can wake up the device from any of the five low-power modes, service the request, and restore back to the low-power mode on return from the interrupt program.

The following six operating modes can be configured by software:

- Active mode (AM)
  - All clocks are active.
- Low-power mode 0 (LPM0)
  - CPU is disabled.
  - ACLK and SMCLK remain active. MCLK is disabled.
- Low-power mode 1 (LPM1)
  - CPU is disabled ACLK and SMCLK remain active. MCLK is disabled.
  - DCO dc-generator is disabled if DCO not used in active mode.
- Low-power mode 2 (LPM2)
  - CPU is disabled.
  - MCLK and SMCLK are disabled.
  - DCO dc-generator remains enabled.
  - ACLK remains active.
- Low-power mode 3 (LPM3)
  - CPU is disabled.
  - MCLK and SMCLK are disabled.
  - DCO dc-generator is disabled.
  - ACLK remains active.
- Low-power mode 4 (LPM4)
  - CPU is disabled.
  - ACLK is disabled.
  - MCLK and SMCLK are disabled.
  - DCO dc-generator is disabled.
  - Crystal oscillator is stopped.

Copyright © 2006–2011, Texas Instruments Incorporated

Interrupt Vector Addresses

The interrupt vectors and the power-up starting address are located in the address range of 0xFFFF to 0xFFC0. The vector contains the 16-bit address of the appropriate interrupt handler instruction sequence.

If the reset vector (located at address 0xFFFE) contains 0xFFFF (for example, if flash is not programmed), the CPU goes into LPM4 immediately after power up.

Table 6. Interrupt Vector Addresses

INTERRUPT SOURCE	INTERRUPT FLAG	SYSTEM INTERRUPT	WORD ADDRESS	PRIORITY
Power-up External Reset Watchdog Flash key violation PC out of range (1)	PORIFG RSTIFG WDTIFG KEYV (2)	Reset	0xFFFE	31, highest
NMI Oscillator Fault Flash memory access violation	NMIIFG OFIFG ACCVIFG (2)(3)	(non)–maskable (non)–maskable (non)–maskable	0xFFFC	30
Timer_B3	TBCCR0 CCIFG (4)	maskable	0xFFFA	29
Timer_B3	TBCCR1 and TBCCR2, CCIFGs, TBIFG (2)(4)	maskable	0xFFF8	28
Comparator_A+	CAIFG	maskable	0xFFF6	27
Watchdog timer	WDTIFG	maskable	0xFFF4	26
Timer_A3	TACCR0 CCIFG (4)	maskable	0xFFF2	25
Timer_A3	TACCR1 CCIFG, TACCR2 CCIFG, TAIFG (2)(4)	maskable	0xFFF0	24
USCI_A0/USCI_B0 Receive USCI_B0 I2C Status	UCA0RXIFG, UCB0RXIFG (2)(5)	maskable	0xFFEE	23
USCI_A0/USCI_B0 Transmit USCI_B0 I2C Receive/Transmit	UCA0TXIFG, UCB0TXIFG (2)(6)	maskable	0xFFEC	22
			0xFFEA	21
			0xFFE8	20
I/O port P2 (eight flags)	P2IFG.0 to P2IFG.7 (2)(3)	maskable	0xFFE6	19
I/O port P1 (eight flags)	P1IFG.0 to P1IFG.7 (2)(3)	maskable	0xFFE4	18
			0xFFE2	17
			0xFFE0	16
See (7)			0xFFDE	15
See (8)			0xFFDC to 0xFFC0	14 to 0, lowest

(1) A reset is generated if the CPU tries to fetch instructions from within the module register memory address range (0x0000 to 0x01FF) or from within unused address range.
(2) Multiple source flags
(3) (non)-maskable: the individual interrupt-enable bit can disable an interrupt event, but the general interrupt enable cannot. Nonmaskable: neither the individual nor the general interrupt-enable bit will disable an interrupt event.
(4) Interrupt flags are located in the module.
(5) In SPI mode: UCB0RXIFG. In I2C mode: UCALIFG, UCNACKIFG, ICSTTIFG, UCSTPIFG
(6) In UART/SPI mode: UCB0TXIFG. In I2C mode: UCB0RXIFG, UCB0TXIFG
(7) This location is used as bootstrap loader security key (BSLSKEY).
A 0xAA55 at this location disables the BSL completely.
A zero (0x0) disables the erasure of the flash if an invalid password is supplied.
(8) The interrupt vectors at addresses 0xFFDC to 0xFFC0 are not used in this device and can be used for regular program code if necessary.

Copyright © 2006–2011, Texas Instruments Incorporated

Special Function Registers

Most interrupt and module enable bits are collected into the lowest address space. Special function register bits not allocated to a functional purpose are not physically present in the device. Simple software access is provided with this arrangement.

Legend

rw	Bit can be read and written.
rw-0, 1	Bit can be read and written. It is Reset or Set by PUC.
rw-(0), (1)	Bit can be read and written. It is Reset or Set by POR.
	SFR bit is not present in device.

Table 7. Interrupt Enable 1

Address	7	6	5	4	3	2	1	0
00h			**ACCVIE**	**NMIIE**			**OFIE**	**WDTIE**
			rw-0	**rw-0**			**rw-0**	**rw-0**

WDTIE	Watchdog timer interrupt enable. Inactive if watchdog mode is selected. Active if watchdog timer is configured in interval timer mode.
OFIE	Oscillator fault interrupt enable
NMIIE	(Non)maskable interrupt enable
ACCVIE	Flash access violation interrupt enable

Table 8. Interrupt Enable 2

Address	7	6	5	4	3	2	1	0
01h					**UCB0TXIE**	**UCB0RXIE**	**UCA0TXIE**	**UCA0RXIE**
					rw-0	rw-0	rw-0	rw-0

UCA0RXIE	USCI_A0 receive-interrupt enable
UCA0TXIE	USCI_A0 transmit-interrupt enable
UCB0RXIE	USCI_B0 receive-interrupt enable
UCB0TXIE	USCI_B0 transmit-interrupt enable

Table 9. Interrupt Flag Register 1

Address	7	6	5	4	3	2	1	0
02h				**NMIIFG**	**RSTIFG**	**PORIFG**	**OFIFG**	**WDTIFG**
				rw-0	**rw-(0)**	**rw-(1)**	**rw-1**	**rw-(0)**

WDTIFG	Set on watchdog timer overflow (in watchdog mode) or security key violation. Reset on V_{CC} power-up or a reset condition at $\overline{RST}$/NMI pin in reset mode.
OFIFG	Flag set on oscillator fault
RSTIFG	External reset interrupt flag. Set on a reset condition at $\overline{RST}$/NMI pin in reset mode. Reset on V_{CC} power up.
PORIFG	Power-on reset interrupt flag. Set on V_{CC} power up.
NMIIFG	Set via $\overline{RST}$/NMI pin

Table 10. Interrupt Flag Register 2

Address	7	6	5	4	3	2	1	0
03h					**UCB0TXIFG**	**UCB0RXIFG**	**UCA0TXIFG**	**UCA0RXIFG**
					rw-0	rw-0	rw-0	rw-0

UCA0RXIFG	USCI_A0 receive-interrupt flag
UCA0TXIFG	USCI_A0 transmit-interrupt flag
UCB0RXIFG	USCI_B0 receive-interrupt flag
UCB0TXIFG	USCI_B0 transmit-interrupt flag

Copyright © 2006–2011, Texas Instruments Incorporated

Memory Organization

Table 11. Memory Organization

		MSP430F2330	MSP430F2350	MSP430F2370
Memory	Size	8KB Flash	16KB Flash	32KB
Main: interrupt vector	Flash	0xFFFF - 0xFFC0	0xFFFF - 0xFFC0	0xFFFF - 0xFFC0
Main: code memory	Flash	0xFFFF - 0xE000	0xFFFF - 0xC000	0xFFFF - 0x8000
Information memory	Size	256 Byte	256 Byte	256 Byte
	Flash	0x10FF - 0x1000	0x10FF - 0x1000	0x10FF - 0x1000
Boot memory	Size	1KB	1KB	1KB
	ROM	0x0FFF - 0x0C00	0x0FFF - 0x0C00	0x0FFF - 0x0C00
RAM	Size	1KB	2KB	2KB
		0x5FF - 0x0200	0x9FF - 0x0200	0x09FF - 0x0200
Peripherals	16–bit	0x01FF - 0x0100	0x01FF - 0x0100	0x01FF - 0x0100
	8–bit	0x00FF - 0x0010	0x00FF - 0x0010	0x00FF - 0x0010
	8–bit SFR	0x000F - 0x0000	0x000F - 0x0000	0x000F - 0x0000

Bootstrap Loader (BSL)

The MSP430 bootstrap loader (BSL) enables users to program the flash memory or RAM using a UART serial interface. Access to the MSP430 memory via the BSL is protected by user-defined password. For complete description of the features of the BSL and its implementation, see the *MSP430 Programming Via the Bootstrap Loader User's Guide*, literature number SLAU319.

Table 12. BSL Function Pins

BSL FUNCTION	YFF PACKAGE PINS	RHA PACKAGE PINS
Data transmit	C4 - P1.1	5 - P1.1
Data receive	C6 - P2.2	14 - P2.2

Flash Memory

The flash memory can be programmed via the JTAG port, the bootstrap loader, or in-system by the CPU. The CPU can perform single-byte and single-word writes to the flash memory. Features of the flash memory include:

- Flash memory has n segments of main memory and four segments of information memory (A to D) of 64 bytes each. Each segment in main memory is 512 bytes in size.
- Segments 0 to n may be erased in one step, or each segment may be individually erased.
- Segments A to D can be erased individually, or as a group with segments 0 to n.
  Segments A to D are also called *information memory*.
- Segment A contains calibration data. After reset, segment A is protected against programming and erasing. It can be unlocked, but care should be taken not to erase this segment if the device-specific calibration data is required.

Copyright © 2006–2011, Texas Instruments Incorporated

Peripherals

Peripherals are connected to the CPU through data, address, and control buses and can be handled using all instructions. For complete module descriptions, see the *MSP430x2xx Family User's Guide* (SLAU144).

Oscillator and System Clock

The clock system is supported by the basic clock module that includes support for a 32768-Hz watch crystal oscillator, an internal very-low-power low-frequency oscillator, an internal digitally-controlled oscillator (DCO), and a high-frequency crystal oscillator. The basic clock module is designed to meet the requirements of both low system cost and low power consumption. The internal DCO provides a fast turn-on clock source and stabilizes in less than 1 µs. The basic clock module provides the following clock signals:

- Auxiliary clock (ACLK), sourced from a 32768-Hz watch crystal, a high-frequency crystal, or the internal very-low-power LF oscillator.
- Main clock (MCLK), the system clock used by the CPU.
- Sub-Main clock (SMCLK), the sub-system clock used by the peripheral modules.

The DCO settings to calibrate the DCO output frequency are stored in the information memory segment A.

Table 13. DCO Calibration Data, Provided From Factory In Flash Info Memory Segment A

DCO FREQUENCY	CALIBRATION REGISTER	SIZE	ADDRESS
1 MHz	CALBC1_1MHZ	byte	0x10FF
	CALBC0_1MHZ	byte	0x10FE
8 MHz	CALBC1_8MHZ	byte	0x10FD
	CALBC0_8MHZ	byte	0x10FC
12 MHz	CALBC1_12MHZ	byte	0x10FB
	CALBC0_12MHZ	byte	0x10FA
16 MHz	CALBC1_16MHZ	byte	0x10F9
	CALBC0_16MHZ	byte	0x10F8

Brownout

The brownout circuit is implemented to provide the proper internal reset signal to the device during power on and power off.

Digital I/O

There are four 8-bit I/O ports implemented—ports P1, P2, P3, and P4:

- All individual I/O bits are independently programmable.
- Any combination of input, output, and interrupt condition is possible.
- Edge-selectable interrupt input capability for all eight bits of port P1 and P2.
- Read/write access to port-control registers is supported by all instructions.
- Each I/O has an individually programmable pullup/pulldown resistor.

The MSP430F23x0 devices provide 32 total port I/O pins available externally. See the device pinout for more information.

Watchdog Timer (WDT+)

The primary function of the WDT+ module is to perform a controlled system restart after a software problem occurs. If the selected time interval expires, a system reset is generated. If the watchdog function is not needed in an application, the module can be disabled or configured as an interval timer and can generate interrupts at selected time intervals.

Copyright © 2006–2011, Texas Instruments Incorporated

Hardware Multiplier

The multiplication operation is supported by a dedicated peripheral module. The module performs 16×16, 16×8, 8×16, and 8×8 bit operations. The module is capable of supporting signed and unsignedmultiplication as well as signed and unsignedmultiply and accumulate operations. The result of an operation can be accessed immediately after the operands have been loaded into the peripheral registers. No additional clock cycles are required.

Comparator_A+

The primary function of the comparator_A+ module is to support precision slope analog-to-digital conversions, battery-voltage supervision, and monitoring of external analog signals.

Timer_A3

Timer_A3 is a 16-bit timer/counter with three capture/compare registers. Timer_A3 can support multiple capture/compares, PWM outputs, and interval timing. Timer_A3 also has extensive interrupt capabilities. Interrupts may be generated from the counter on overflow conditions and from each of the capture/compare registers.

Table 14. Timer_A3 Signal Connections

INPUT PIN NUMBER		DEVICE INPUT SIGNAL	MODULE INPUT NAME	MODULE BLOCK	MODULE OUTPUT SIGNAL	OUTPUT PIN NUMBER	
YFF	RHA					YFF	RHA
B4 – P1.0	4 – P1.0	TACLK	TACLK	Timer	NA		
		ACLK	ACLK				
		SMCLK	SMCLK				
C7 – P2.1	13 – P2.1	TAINCLK	INCLK				
C4 – P1.1	5 – P1.1	TA0	CCI0A	CCR0	TA0	C4 – P1.1	5 – P1.1
C6 – P2.2	14 – P2.2	TA0	CCI0B			B6 – P1.5	9 - P1.5
		V_{SS}	GND				
		V_{CC}	V_{CC}				
A5 – P1.2	6 – P1.2	TA1	CCI1A	CCR1	TA1	A5 – P1.2	6 – P1.2
		CAOUT (internal)	CCI1B			A7 – P1.6	10 – P1.6
		V_{SS}	GND			D7 – P2.3	15 – P2.3
		V_{CC}	V_{CC}				
B5 – P1.3	7 – P1.3	TA2	CCI2A	CCR2	TA2	B5 – P1.3	7 – P1.3
		ACLK (internal)	CCI2B			B7 – P1.7	11 – P1.7
		V_{SS}	GND			D6 – P2.4	16 – P2.4
		V_{CC}	V_{CC}				

Copyright © 2006–2011, Texas Instruments Incorporated

Timer_B3

Timer_B3 is a 16–bit timer/counter with three capture/compare registers. Timer_B3 can support multiple capture/compares, PWM outputs, and interval timing. Timer_B3 also has extensive interrupt capabilities. Interrupts may be generated from the counter on overflow conditions and from each of the capture/compare registers.

Table 15. Timer_B3 Signal Connections

INPUT PIN NUMBER		DEVICE INPUT SIGNAL	MODULE INPUT NAME	MODULE BLOCK	MODULE OUTPUT SIGNAL	OUTPUT PIN NUMBER	
YFF	RHA					YFF	RHA
E2 – P4.7	33 – P4.7	TBCLK	TACLK	Timer	NA		
		ACLK	ACLK				
		SMCLK	SMCLK				
		TBCLK	INCLK				
F4 – P4.0	26 – P4.0	TB0	CCI0A	CCR0	TB0	F4 – P4.0	26 – P4.0
F3 – P4.3	29 – P4.3	TB0	CCI0B			F3 – P4.3	29 – P4.3
		V_{SS}	GND				
		V_{CC}	V_{CC}				
G3 – P4.1	27 – P4.1	TA1	CCI1A	CCR1	TB1	G3 – P4.1	27 – P4.1
G1 - P4.4	30 - P4.4	TB1	CCI1B			G1 – P4.4	30 – P4.4
		V_{SS}	GND				
		V_{CC}	V_{CC}				
G2 – P4.2	28 – P4.2	TB2	CCI2A	CCR2	TB2	G2 – P4.2	28 – P4.2
		ACLK (internal)	CCI2B			F1 – P4.5	31 – P4.5
		V_{SS}	GND				
		V_{CC}	V_{CC}				

Universal Serial Communications Interface (USCI)

The USCI module is used for serial data communication. The USCI module supports synchronous communication protocols like SPI (3 or 4 pin), I2C and asynchronous communication protocols such as UART, enhanced UART with automatic baudrate detection (LIN), and IrDA.

USCI_A0 provides support for SPI (3 or 4 pin), UART, enhanced UART, and IrDA.

USCI_B0 provides support for SPI (3 or 4 pin) and I2C.

Copyright © 2006–2011, Texas Instruments Incorporated

Peripheral File Map

Table 16. Peripherals With Word Access

MODULE	REGISTER NAME	SHORT NAME	ADDRESS OFFSET
Timer_B3	Capture/compare register	TBCCR2	0x0196
	Capture/compare register	TBCCR1	0x0194
	Capture/compare register	TBCCR0	0x0192
	Timer_B register	TBR	0x0190
	Capture/compare control	TBCCTL2	0x0186
	Capture/compare control	TBCCTL1	0x0184
	Capture/compare control	TBCCTL0	0x0182
	Timer_B control	TBCTL	0x0180
	Timer_B interrupt vector	TBIV	0x011E
Timer_A3	Capture/compare register	TACCR2	0x0176
	Capture/compare register	TACCR1	0x0174
	Capture/compare register	TACCR0	0x0172
	Timer_A register	TAR	0x0170
	Capture/compare control	TACCTL2	0x0166
	Capture/compare control	TACCTL1	0x0164
	Capture/compare control	TACCTL0	0x0162
	Timer_A control	TACTL	0x0160
	Timer_A interrupt vector	TAIV	0x012E
Flash Memory	Flash control 3	FCTL3	0x012C
	Flash control 2	FCTL2	0x012A
	Flash control 1	FCTL1	0x0128
Hardware Multiplier	Sum extend	SUMEXT	0x013E
	Result high word	RESHI	0x013C
	Result low word	RESLO	0x013A
	Second operand	OP2	0x0138
	Multiply signed +accumulate/operand1	MACS	0x0136
	Multiply+accumulate/operand1	MAC	0x0134
	Multiply signed/operand1	MPYS	0x0132
	Multiply unsigned/operand1	MPY	0x0130
Watchdog Timer+	Watchdog/timer control	WDTCTL	0x0120

Table 17. Peripherals With Byte Access

MODULE	REGISTER NAME	SHORT NAME	ADDRESS OFFSET
USCI_B0	USCI_B0 transmit buffer	UCB0TXBUF	0x06F
	USCI_B0 receive buffer	UCB0RXBUF	0x06E
	USCI_B0 status	UCB0STAT	0x06D
	USCI_B0 bit rate control 1	UCB0BR1	0x06B
	USCI_B0 bit rate control 0	UCB0BR0	0x06A
	USCI_B0 control 1	UCB0CTL1	0x069
	USCI_B0 control 0	UCB0CTL0	0x068
	USCI_B0 I2C slave address	UCB0SA	0x011A
	USCI_B0 I2C own address	UCB0OA	0x0118

Copyright © 2006–2011, Texas Instruments Incorporated

Table 17. Peripherals With Byte Access (continued)

MODULE	REGISTER NAME	SHORT NAME	ADDRESS OFFSET
USCI_A0	USCI_A0 transmit buffer	UCA0TXBUF	0x0067
	USCI_A0 receive buffer	UCA0RXBUF	0x0066
	USCI_A0 status	UCA0STAT	0x0065
	USCI_A0 modulation control	UCA0MCTL	0x0064
	USCI_A0 baud rate control 1	UCA0BR1	0x0063
	USCI_A0 baud rate control 0	UCA0BR0	0x0062
	USCI_A0 control 1	UCA0CTL1	0x0061
	USCI_A0 control 0	UCA0CTL0	0x0060
	USCI_A0 IrDA receive control	UCA0IRRCTL	0x005F
	USCI_A0 IrDA transmit control	UCA0IRTCTL	0x005E
	USCI_A0 auto baud rate control	UCA0ABCTL	0x005D
Basic Clock System+	Basic clock system control 3	BCSCTL3	0x0053
	Basic clock system control 2	BCSCTL2	0x0058
	Basic clock system control 1	BCSCTL1	0x0057
	DCO clock frequency control	DCOCTL	0x0056
Port P4	Port P4 resistor enable	P4REN	0x0011
	Port P4 selection	P4SEL	0x001F
	Port P4 direction	P4DIR	0x001E
	Port P4 output	P4OUT	0x001D
	Port P4 input	P4IN	0x001C
Port P3	Port P3 resistor enable	P3REN	0x0010
	Port P3 selection	P3SEL	0x001B
	Port P3 direction	P3DIR	0x001A
	Port P3 output	P3OUT	0x0019
	Port P3 input	P3IN	0x0018
Port P2	Port P2 resistor enable	P2REN	0x002F
	Port P2 selection	P2SEL	0x002E
	Port P2 interrupt enable	P2IE	0x002D
	Port P2 interrupt edge select	P2IES	0x002C
	Port P2 interrupt flag	P2IFG	0x002B
	Port P2 direction	P2DIR	0x002A
	Port P2 output	P2OUT	0x0029
	Port P2 input	P2IN	0x0028
Port P1	Port P1 resistor enable	P1REN	0x0027
	Port P1 selection	P1SEL	0x0026
	Port P1 interrupt enable	P1IE	0x0025
	Port P1 interrupt edge select	P1IES	0x0024
	Port P1 interrupt flag	P1IFG	0x0023
	Port P1 direction	P1DIR	0x0022
	Port P1 output	P1OUT	0x0021
	Port P1 input	P1IN	0x0020
Special Function	SFR interrupt flag 2	IFG2	0x0003
	SFR interrupt flag 1	IFG1	0x0002
	SFR interrupt enable 2	IE2	0x0001
	SFR interrupt enable 1	IE1	0x0000

Copyright © 2006–2011, Texas Instruments Incorporated

Absolute Maximum Ratings[(1)]

Voltage applied at V_{CC} to V_{SS}		-0.3 V to 4.1 V
Voltage applied to any pin [(2)]		-0.3 V to (V_{CC} + 0.3 V)
Diode current at any device terminal		±2 mA
Storage temperature, T_{stg} [(3)]	Unprogrammed device	-55°C to 150°C
	Programmed device	-55°C to 150°C

(1) Stresses beyond those listed under *absolute maximum ratings* may cause permanent damage to the device. These are stress ratings only, and functional operation of the device at these or any other conditions beyond those indicated under *recommended operating conditions* is not implied. Exposure to absolute-maximum-rated conditions for extended periods may affect device reliability.
(2) All voltages referenced to V_{SS}. The JTAG fuse-blow voltage, V_{FB}, is allowed to exceed the absolute maximum rating. The voltage is applied to the TEST pin when blowing the JTAG fuse.
(3) Higher temperature may be applied during board soldering process according to the current JEDEC J-STD-020 specification with peak reflow temperatures not higher than classified on the device label on the shipping boxes or reels.

Recommended Operating Conditions[(1)]

			MIN	MAX	UNIT
V_{CC}	Supply voltage[(2)], AV_{CC} = DV_{CC} = V_{CC}	During program execution	1.8	3.6	V
		During flash memory programming	2.2	3.6	
V_{SS}	Supply voltage, AV_{SS} = DV_{SS} = V_{SS}		0	0	V
T_A	Operating free-air temperature	I version	-40	85	°C
		T version	-40	105	
f_{SYSTEM}	Processor frequency (maximum MCLK frequency)[(1)(3)] (see Figure 1)	V_{CC} = 1.8 V, Duty cycle = 50% ±10%	dc	4.15	MHz
		V_{CC} = 2.7 V, Duty cycle = 50% ±10%	dc	12	
		V_{CC} ≥ 3.3 V, Duty cycle = 50% ±10%	dc	16	

(1) Modules might have a different maximum input clock specification. See the specification of the respective module in this data sheet.
(2) It is recommended to power AV_{CC} and DV_{CC} from the same source. A maximum difference of 0.3 V between AV_{CC} and DV_{CC} can be tolerated during power-up.
(3) The MSP430 CPU is clocked directly with MCLK. Both the high and low phase of MCLK must not exceed the pulse width of the specified maximum frequency.

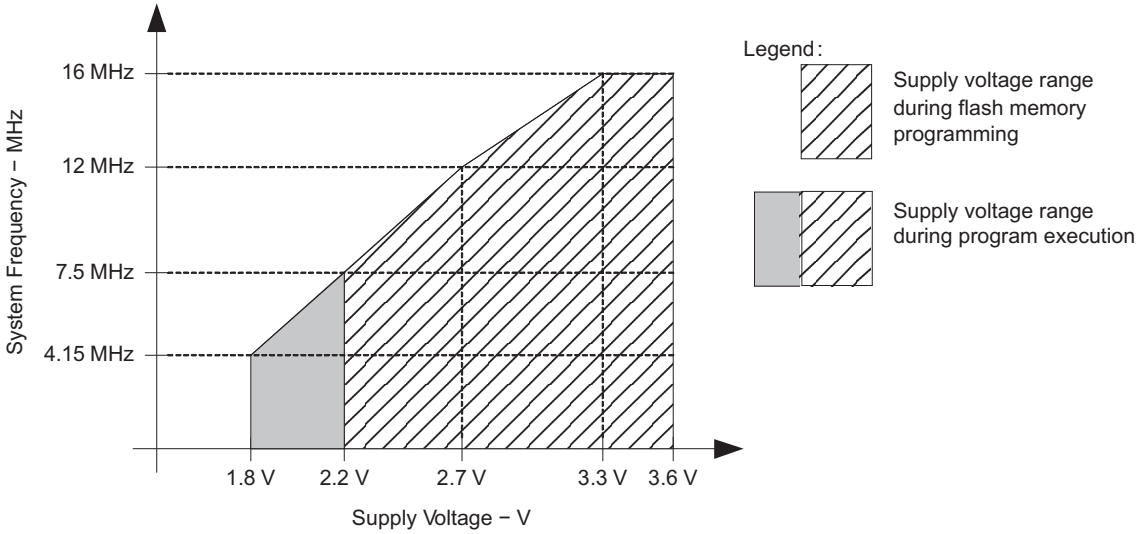

NOTE: Minimum processor frequency is defined by system clock. Flash program or erase operations require a minimum V_{CC} of 2.2 V.

Figure 1. Operating Area

Copyright © 2006–2011, Texas Instruments Incorporated

Active Mode Supply Current (Into DV_{CC} + AV_{CC}) Excluding External Current

over recommended ranges of supply voltage and operating free-air temperature (unless otherwise noted)(1)(2)

PARAMETER		TEST CONDITIONS	T_A	V_{CC}	MIN	TYP	MAX	UNIT
$I_{AM,1MHz}$	Active mode (AM) current (1 MHz)	$f_{DCO} = f_{MCLK} = f_{SMCLK}$ = 1 MHz, f_{ACLK} = 32768 Hz, Program executes in flash, BCSCTL1 = CALBC1_1MHZ, DCOCTL = CALDCO_1MHZ, CPUOFF = 0, SCG0 = 0, SCG1 = 0, OSCOFF = 0		2.2 V		270	370	µA
				3 V		390	550	
$I_{AM,1MHz}$	Active mode (AM) current (1 MHz)	$f_{DCO} = f_{MCLK} = f_{SMCLK}$ = 1 MHz, f_{ACLK} = 32768 Hz, Program executes in RAM, BCSCTL1 = CALBC1_1MHZ, DCOCTL = CALDCO_1MHZ, CPUOFF = 0, SCG0 = 0, SCG1 = 0, OSCOFF = 0		2.2 V		226		µA
				3 V		318		
$I_{AM,4kHz}$	Active mode (AM) current (4 kHz)	$f_{MCLK} = f_{SMCLK} = f_{ACLK}$ = 32768 Hz / 8 = 4096 Hz, f_{DCO} = 0 Hz, Program executes in flash, SELMx = 11, SELS = 1, DIVMx = DIVSx = DIVAx = 11, CPUOFF = 0, SCG0 = 1, SCG1 = 0, OSCOFF = 0	-40°C to 85°C	2.2 V		2	6	µA
			105°C				14	
			-40°C to 85°C	3 V		3	9	
			105°C				17	
$I_{AM,100kHz}$	Active mode (AM) current (100 kHz)	$f_{MCLK} = f_{SMCLK} = f_{DCO(0,0)}$ ≈ 100 kHz, f_{ACLK} = 0 Hz, Program executes in flash, RSELx = 0, DCOx = 0, CPUOFF = 0, SCG0 = 0, SCG1 = 0, OSCOFF = 1	-40°C to 85°C	2.2 V		60	85	µA
			105°C				95	
			-40°C to 85°C	3 V		72	95	
			105°C				105	

(1) All inputs are tied to 0 V or V_{CC}. Outputs do not source or sink any current.
(2) The currents are characterized with a Micro Crystal CC4V-T1A SMD crystal with a load capacitance of 9 pF. The internal and external load capacitance is chosen to closely match the required 9 pF.

Typical Characteristics - Active-Mode Supply Current (Into DV_{CC} + AV_{CC})

ACTIVE-MODE CURRENT vs SUPPLY VOLTAGE T_A = 25°C

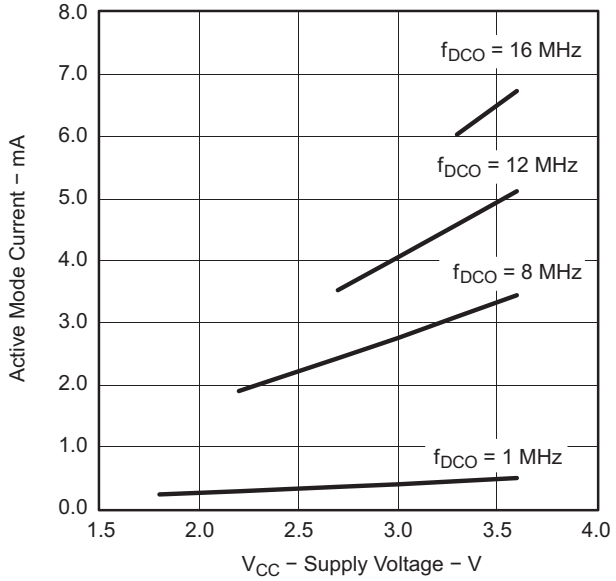

Figure 2.

ACTIVE-MODE CURRENT vs DCO FREQUENCY

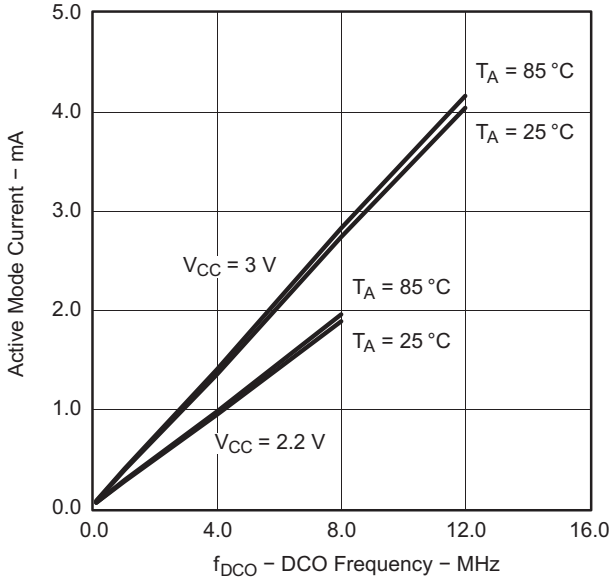

Figure 3.

Low-Power-Mode Supply Currents (Into V_{CC}) Excluding External Current (1)(2)

over recommended ranges of supply voltage and operating free-air temperature (unless otherwise noted)

PARAMETER		TEST CONDITIONS	T_A	V_{CC}	MIN	TYP	MAX	UNIT
$I_{LPM0,\ 1MHz}$	Low-power mode 0 (LPM0) current(3)	f_{MCLK} = 0 MHz, f_{SMCLK} = f_{DCO} = 1 MHz, f_{ACLK} = 32768 Hz, BCSCTL1 = CALBC1_1MHZ, DCOCTL = CALDCO_1MHZ, CPUOFF = 1, SCG0 = 0, SCG1 = 0, OSCOFF = 0	-40°C to 85°C	2.2 V		68	84	µA
			105°C				90	
			-40°C to 85°C	3 V		88	110	
			105°C				115	
$I_{LPM0,\ 100kHz}$	Low-power mode 0 (LPM0) current(3)	f_{MCLK} = 0 MHz, f_{SMCLK} = f_{DCO}(0, 0) ≈ 100 kHz, f_{ACLK} = 0 Hz, RSELx = 0, DCOx = 0, CPUOFF = 1, SCG0 = 0, SCG1 = 0, OSCOFF = 1	-40°C to 85°C	2.2 V		36	45	µA
			105°C				50	
			-40°C to 85°C	3 V		40	50	
			105°C				54	
I_{LPM2}	Low-power mode 2 (LPM2) current(4)	f_{MCLK} = f_{SMCLK} = 0 MHz, f_{DCO} = 1 MHz, f_{ACLK} = 32768 Hz, BCSCTL1 = CALBC1_1MHZ, DCOCTL = CALDCO_1MHZ, CPUOFF = 1, SCG0 = 0, SCG1 = 1, OSCOFF = 0	-40°C to 85°C	2.2 V		20	28	µA
			105°C				32	
			-40°C to 85°C	3 V		23	32	
			105°C				37	
$I_{LPM3,\ LFXT1}$	Low-power mode 3 (LPM3) current(4)	f_{DCO} = f_{MCLK} = f_{SMCLK} = 0 MHz, f_{ACLK} = 32768 Hz, CPUOFF = 1, SCG0 = 1, SCG1 = 1, OSCOFF = 0	-40°C to 25°C	2.2 V		0.7	1	µA
			85°C				3.3	
			105°C				10	
			-40°C to 25°C	3 V		0.85	1.2	
			85°C				3.8	
			105°C				12	
$I_{LPM3,\ VLO}$	Low-power mode 3 current, (LPM3)(4)	f_{DCO} = f_{MCLK} = f_{SMCLK} = 0 MHz, f_{ACLK} from internal LF oscillator (VLO), CPUOFF = 1, SCG0 = 1, SCG1 = 1, OSCOFF = 0	-40°C to 25°C	2.2 V		0.25	0.8	µA
			85°C				2.9	
			105°C				9	
			-40°C to 25°C	3 V		0.35	1	
			85°C				3.5	
			105°C				11	
I_{LPM4}	Low-power mode 4 (LPM4) current(5)	f_{DCO} = f_{MCLK} = f_{SMCLK} = 0 MHz, f_{ACLK} = 0 Hz, CPUOFF = 1, SCG0 = 1, SCG1 = 1, OSCOFF = 1	-40°C	2.2 V			0.5	µA
			25°C				0.5	
			85°C			1.7	2.7	
			105°C				8.6	
			-40°C	3 V			0.5	
			25°C				0.5	
			85°C			1.9	3	
			105°C				9	

(1) All inputs are tied to 0 V or V_{CC}. Outputs do not source or sink any current.
(2) The currents are characterized with a Micro Crystal CC4V-T1A SMD crystal with a load capacitance of 9 pF. The internal and external load capacitance is chosen to closely match the required 9 pF.
(3) Current for brownout and WDT clocked by SMCLK included.
(4) Current for brownout and WDT clocked by ACLK included.
(5) Current for brownout included.

Copyright © 2006–2011, Texas Instruments Incorporated

Schmitt-Trigger Inputs (Ports P1, P2, P3, P4, JTAG, $\overline{RST}$/NMI, XIN[1])

over recommended ranges of supply voltage and operating free-air temperature (unless otherwise noted)

PARAMETER		TEST CONDITIONS	V_{CC}	MIN	TYP	MAX	UNIT
V_{IT+}	Positive-going input threshold voltage			0.45 V_{CC}		0.75 V_{CC}	V
			2.2 V	1		1.65	
			3 V	1.35		2.25	
V_{IT-}	Negative-going input threshold voltage			0.25 V_{CC}		0.55 V_{CC}	V
			2.2 V	0.55		1.20	
			3 V	0.75		1.65	
V_{hys}	Input voltage hysteresis (V_{IT+} - V_{IT-})		2.2 V	0.2		1	V
			3 V	0.3		1	
R_{Pull}	Pullup/pulldown resistor	For pullup: $V_{IN} = V_{SS}$, For pulldown: $V_{IN} = V_{CC}$		20	35	50	kΩ
C_I	Input capacitance	$V_{IN} = V_{SS}$ or V_{CC}			5		pF

(1) XIN only in bypass mode

Inputs (Ports P1, P2)

over recommended ranges of supply voltage and operating free-air temperature (unless otherwise noted)

PARAMETER		TEST CONDITIONS	V_{CC}	MIN	TYP	MAX	UNIT
$t_{(int)}$	External interrupt timing	Port P1, P2: P1.x to P2.x, External trigger pulse width to set interrupt flag[1]	2.2 V/3 V	20			ns

(1) An external signal sets the interrupt flag every time the minimum interrupt pulse width $t_{(int)}$ is met. It may be set with trigger signals shorter than $t_{(int)}$.

Leakage Current (Ports P1, P2, P3, P4)

over recommended ranges of supply voltage and operating free-air temperature (unless otherwise noted)

PARAMETER		TEST CONDITIONS	V_{CC}	MIN	TYP	MAX	UNIT
$I_{lkg(Px.y)}$	High-impedance leakage current	[1] [2]	2.2 V/3 V			±50	nA

(1) The leakage current is measured with V_{SS} or V_{CC} applied to the corresponding pin(s), unless otherwise noted.
(2) The leakage of the digital port pins is measured individually. The port pin is selected for input and the pullup/pulldown resistor is disabled.

Copyright © 2006–2011, Texas Instruments Incorporated

Outputs (Ports P1, P2, P3, P4)

over recommended ranges of supply voltage and operating free-air temperature (unless otherwise noted)

PARAMETER		TEST CONDITIONS	V_{CC}	MIN	MAX	UNIT
V_{OH}	High-level output voltage	$I_{OH(max)}$ = -1.5 mA (1)	2.2 V	V_{CC} - 0.25	V_{CC}	V
		$I_{OH(max)}$ = -6 mA (2)		V_{CC} - 0.6	V_{CC}	
		$I_{OH(max)}$ = -1.5 mA(1)	3 V	V_{CC} - 0.25	V_{CC}	
		$I_{OH(max)}$ = -6 mA(2)		V_{CC} - 0.6	V_{CC}	
V_{OL}	Low-level output voltage	$I_{OL(max)}$ = 1.5 mA(1)	2.2 V	V_{SS}	V_{SS} + 0.25	V
		$I_{OL(max)}$ = 6 mA(2)		V_{SS}	V_{SS} + 0.6	
		$I_{OL(max)}$ = 1.5 mA(1)	3 V	V_{SS}	V_{SS} + 0.25	
		$I_{OL(max)}$ = 6 mA(2)		V_{SS}	V_{SS} + 0.6	

(1) The maximum total current, $I_{OH(max)}$ and $I_{OL(max)}$, for all outputs combined, should not exceed ±12 mA to hold the maximum voltage drop specified.
(2) The maximum total current, $I_{OH(max)}$ and $I_{OL(max)}$, for all outputs combined, should not exceed ±48 mA to hold the maximum voltage drop specified.

Output Frequency (Ports P1, P2, P3, P4)

over recommended ranges of supply voltage and operating free-air temperature (unless otherwise noted)

PARAMETER		TEST CONDITIONS	V_{CC}	MIN	TYP	MAX	UNIT
$f_{Px.y}$	Port output frequency (with load)	P1.4/SMCLK, C_L = 20 pF, R_L = 1 kΩ(1)(2)	2.2 V			7.5	MHz
			3 V			12	
$f_{Port°CLK}$	Clock output frequency	P2.0/ACLK, P1.4/SMCLK, C_L = 20 pF(2)	2.2 V			7.5	MHz
			3 V			16	

(1) A resistive divider with two 0.5-kΩ resistors between V_{CC} and V_{SS} is used as load. The output is connected to the center tap of the divider.
(2) The output voltage reaches at least 10% and 90% V_{CC} at the specified toggle frequency.

Copyright © 2006–2011, Texas Instruments Incorporated

Typical Characteristics - Outputs

One output loaded at a time.

TYPICAL LOW-LEVEL OUTPUT CURRENT vs LOW-LEVEL OUTPUT VOLTAGE

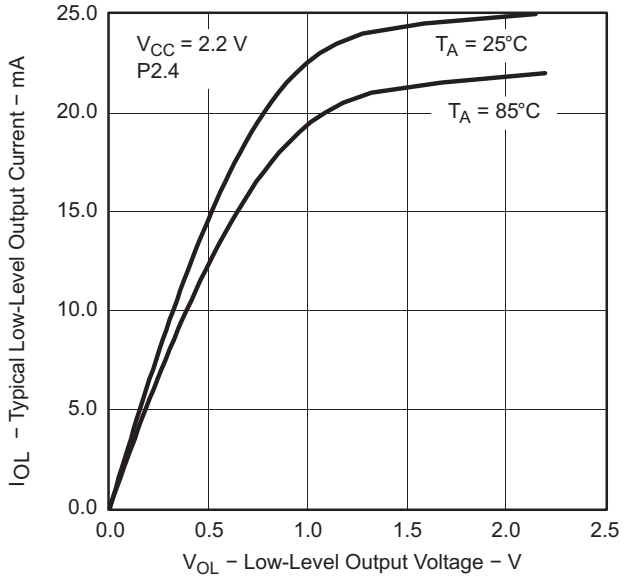

Figure 4.

TYPICAL LOW-LEVEL OUTPUT CURRENT vs LOW-LEVEL OUTPUT VOLTAGE

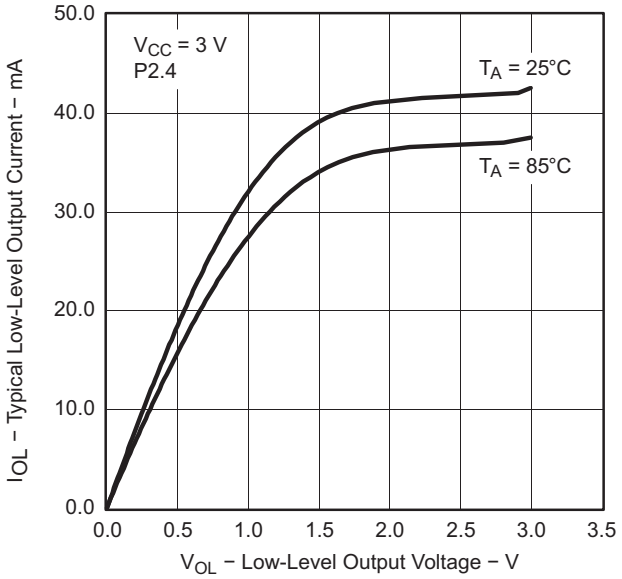

Figure 5.

TYPICAL HIGH-LEVEL OUTPUT CURRENT vs HIGH-LEVEL OUTPUT VOLTAGE

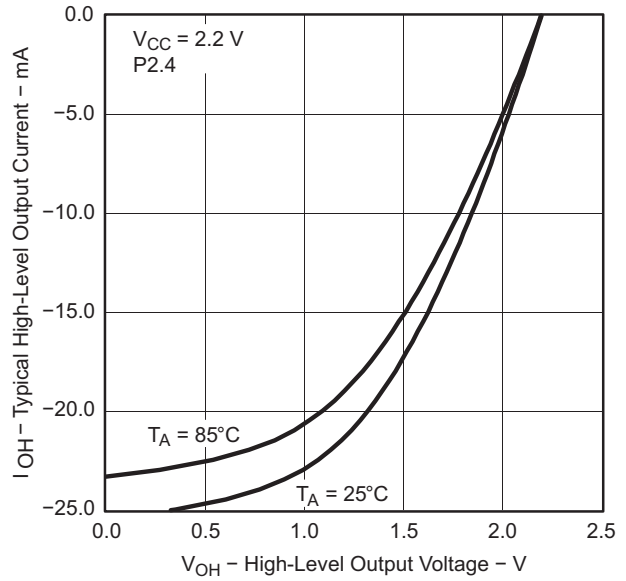

Figure 6.

TYPICAL HIGH-LEVEL OUTPUT CURRENT vs HIGH-LEVEL OUTPUT VOLTAGE

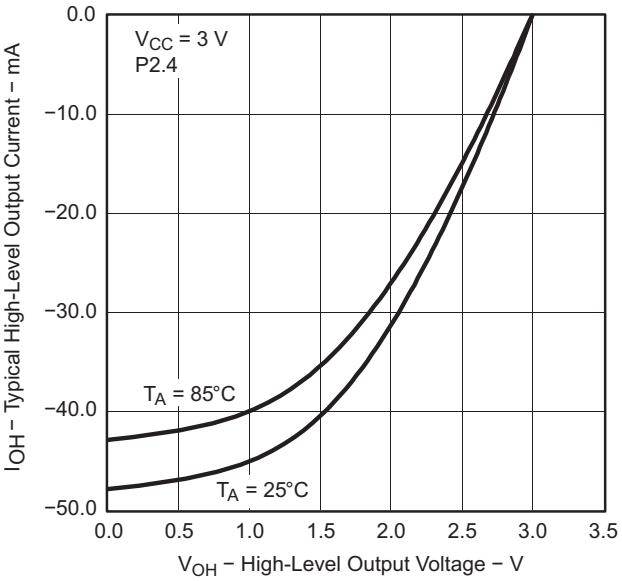

Figure 7.

Copyright © 2006–2011, Texas Instruments Incorporated

POR/Brownout Reset (BOR)(1)(2)

over recommended ranges of supply voltage and operating free-air temperature (unless otherwise noted)

PARAMETER		TEST CONDITIONS	V_{CC}	MIN	TYP	MAX	UNIT
$V_{CC(start)}$	See Figure 8	$dV_{CC}/dt \le 3$ V/s			0.7 × $V_{(B_IT-)}$		V
$V_{(B_IT-)}$	See Figure 8 through Figure 10	$dV_{CC}/dt \le 3$ V/s				1.71	V
$V_{hys(B_IT-)}$	See Figure 8	$dV_{CC}/dt \le 3$ V/s		70	130	210	mV
$t_{d(BOR)}$	See Figure 8					2000	µs
$t_{(reset)}$	Pulse length needed at $\overline{RST}$/NMI pin to accepted reset internally		2.2 V/3 V	2			µs

(1) The current consumption of the brownout module is already included in the I_{CC} current consumption data. The voltage level $V_{(B_IT-)} + V_{hys(B_IT-)}$ is ≤ 1.8 V.

(2) During power up, the CPU begins code execution following a period of $t_{d(BOR)}$ after $V_{CC} = V_{(B_IT-)} + V_{hys(B_IT-)}$. The default DCO settings must not be changed until $V_{CC} \ge V_{CC(min)}$, where $V_{CC(min)}$ is the minimum supply voltage for the desired operating frequency.

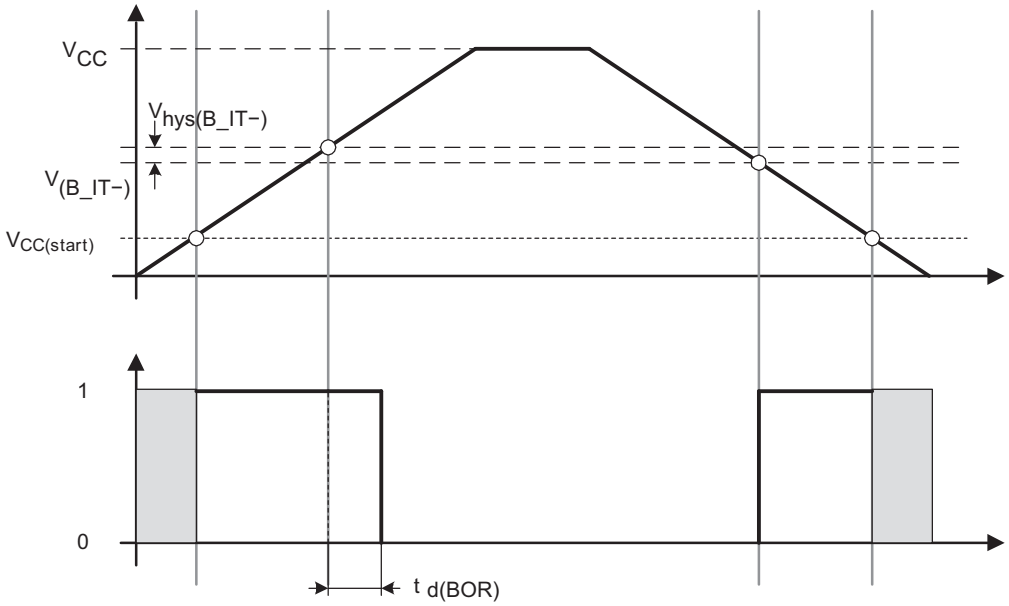

Figure 8. POR/Brownout Reset (BOR) vs Supply Voltage

Copyright © 2006–2011, Texas Instruments Incorporated

Typical Characteristics - POR/Brownout Reset (BOR)

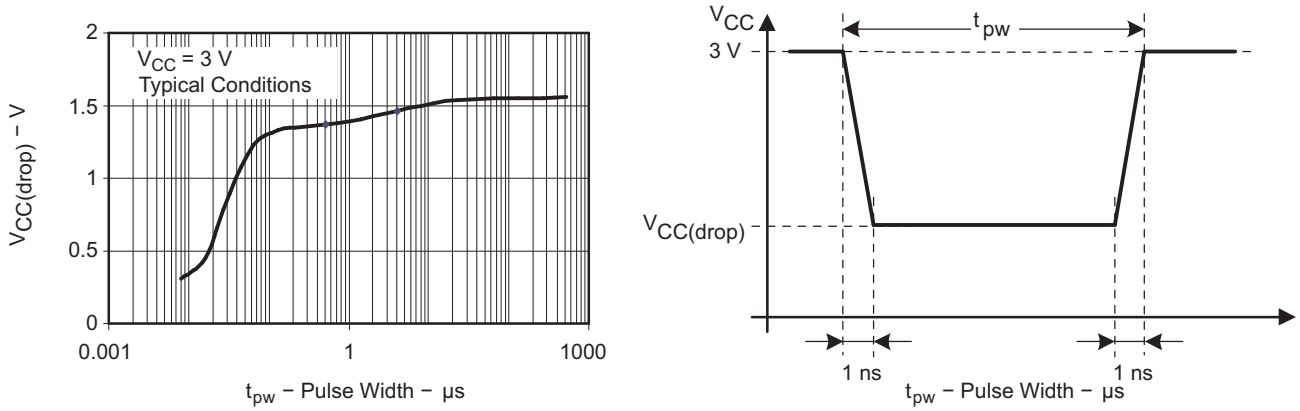

Figure 9. $V_{CC(drop)}$ Level With a Square Voltage Drop to Generate a POR/Brownout Signal

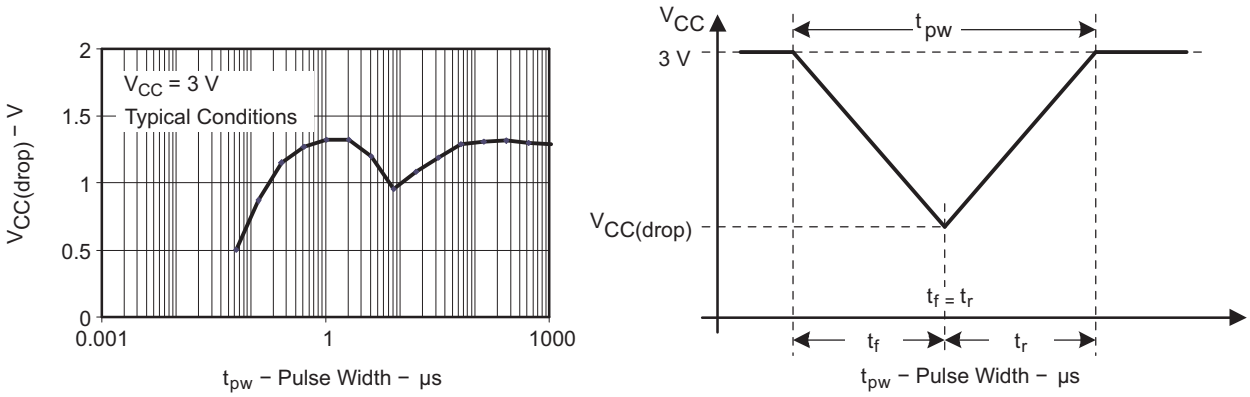

Figure 10. $V_{CC(drop)}$ Level With a Triangle Voltage Drop to Generate a POR/Brownout Signal

Copyright © 2006–2011, Texas Instruments Incorporated

Main DCO Characteristics

- All ranges selected by RSELx overlap with RSELx + 1: RSELx = 0 overlaps RSELx = 1, ... RSELx = 14 overlaps RSELx = 15.
- DCO control bits DCOx have a step size as defined by parameter S_{DCO}.
- Modulation control bits MODx select how often $f_{DCO(RSEL,DCO+1)}$ is used within the period of 32 DCOCLK cycles. The frequency $f_{DCO(RSEL,DCO)}$ is used for the remaining cycles. The frequency is an average equal to:

$$f_{average} = \frac{32 \times f_{DCO(RSEL,DCO)} \times f_{DCO(RSEL,DCO+1)}}{MOD \times f_{DCO(RSEL,DCO)} + (32 - MOD) \times f_{DCO(RSEL,DCO+1)}}$$

DCO Frequency

over recommended ranges of supply voltage and operating free-air temperature (unless otherwise noted)

PARAMETER		TEST CONDITIONS	V_{CC}	MIN	TYP	MAX	UNIT
V_{CC}	Supply voltage range	RSELx < 14		1.8		3.6	V
		RSELx = 14		2.2		3.6	
		RSELx = 15		3.0		3.6	
$f_{DCO(0,0)}$	DCO frequency (0, 0)	RSELx = 0, DCOx = 0, MODx = 0	2.2 V/3 V	0.06		0.14	MHz
$f_{DCO(0,3)}$	DCO frequency (0, 3)	RSELx = 0, DCOx = 3, MODx = 0	2.2 V/3 V	0.07		0.17	MHz
$f_{DCO(1,3)}$	DCO frequency (1, 3)	RSELx = 1, DCOx = 3, MODx = 0	2.2 V/3 V	0.10		0.20	MHz
$f_{DCO(2,3)}$	DCO frequency (2, 3)	RSELx = 2, DCOx = 3, MODx = 0	2.2 V/3 V	0.14		0.28	MHz
$f_{DCO(3,3)}$	DCO frequency (3, 3)	RSELx = 3, DCOx = 3, MODx = 0	2.2 V/3 V	0.20		0.40	MHz
$f_{DCO(4,3)}$	DCO frequency (4, 3)	RSELx = 4, DCOx = 3, MODx = 0	2.2 V/3 V	0.28		0.54	MHz
$f_{DCO(5,3)}$	DCO frequency (5, 3)	RSELx = 5, DCOx = 3, MODx = 0	2.2 V/3 V	0.39		0.77	MHz
$f_{DCO(6,3)}$	DCO frequency (6, 3)	RSELx = 6, DCOx = 3, MODx = 0	2.2 V/3 V	0.54		1.06	MHz
$f_{DCO(7,3)}$	DCO frequency (7, 3)	RSELx = 7, DCOx = 3, MODx = 0	2.2 V/3 V	0.80		1.50	MHz
$f_{DCO(8,3)}$	DCO frequency (8, 3)	RSELx = 8, DCOx = 3, MODx = 0	2.2 V/3 V	1.10		2.10	MHz
$f_{DCO(9,3)}$	DCO frequency (9, 3)	RSELx = 9, DCOx = 3, MODx = 0	2.2 V/3 V	1.60		3.00	MHz
$f_{DCO(10,3)}$	DCO frequency (10, 3)	RSELx = 10, DCOx = 3, MODx = 0	2.2 V/3 V	2.50		4.30	MHz
$f_{DCO(11,3)}$	DCO frequency (11, 3)	RSELx = 11, DCOx = 3, MODx = 0	2.2 V/3 V	3.00		5.50	MHz
$f_{DCO(12,3)}$	DCO frequency (12, 3)	RSELx = 12, DCOx = 3, MODx = 0	2.2 V/3 V	4.30		7.30	MHz
$f_{DCO(13,3)}$	DCO frequency (13, 3)	RSELx = 13, DCOx = 3, MODx = 0	2.2 V/3 V	6.00		9.60	MHz
$f_{DCO(14,3)}$	DCO frequency (14, 3)	RSELx = 14, DCOx = 3, MODx = 0	2.2 V/3 V	8.60		13.9	MHz
$f_{DCO(15,3)}$	DCO frequency (15, 3)	RSELx = 15, DCOx = 3, MODx = 0	3 V	12.0		18.5	MHz
$f_{DCO(15,7)}$	DCO frequency (15, 7)	RSELx = 15, DCOx = 7, MODx = 0	3 V	16.0		26.0	MHz
S_{RSEL}	Frequency step between range RSEL and RSEL+1	$S_{RSEL} = f_{DCO(RSEL+1,DCO)} / f_{DCO(RSEL,DCO)}$	2.2 V/3 V			1.55	ratio
S_{DCO}	Frequency step between tap DCO and DCO+1	$S_{DCO} = f_{DCO(RSEL,DCO+1)} / f_{DCO(RSEL,DCO)}$	2.2 V/3 V	1.05	1.08	1.12	ratio
	Duty cycle	Measured at P1.4/SMCLK	2.2 V/3 V	40	50	60	%

Copyright © 2006–2011, Texas Instruments Incorporated

Calibrated DCO Frequencies - Tolerance at Calibration

over recommended ranges of supply voltage and operating free-air temperature (unless otherwise noted)

PARAMETER		TEST CONDITIONS	T_A	V_{CC}	MIN	TYP	MAX	UNIT
	Frequency tolerance at calibration		25°C	3 V	-1	±0.2	+1	%
$f_{CAL(1MHz)}$	1-MHz calibration value	BCSCTL1 = CALBC1_1MHZ, DCOCTL = CALDCO_1MHZ, Gating time: 5 ms	25°C	3 V	0.990	1	1.010	MHz
$f_{CAL(8MHz)}$	8-MHz calibration value	BCSCTL1 = CALBC1_8MHZ, DCOCTL = CALDCO_8MHZ, Gating time: 5 ms	25°C	3 V	7.920	8	8.080	MHz
$f_{CAL(12MHz)}$	12-MHz calibration value	BCSCTL1 = CALBC1_12MHZ, DCOCTL = CALDCO_12MHZ, Gating time: 5 ms	25°C	3 V	11.88	12	12.12	MHz
$f_{CAL(16MHz)}$	16-MHz calibration value	BCSCTL1 = CALBC1_16MHZ, DCOCTL = CALDCO_16MHZ, Gating time: 2 ms	25°C	3 V	15.84	16	16.16	MHz

Calibrated DCO Frequencies - Tolerance Over Temperature 0°C to 85°C

over recommended ranges of supply voltage and operating free-air temperature (unless otherwise noted)

PARAMETER		TEST CONDITIONS	T_A	V_{CC}	MIN	TYP	MAX	UNIT
	1-MHz tolerance over temperature		0°C to 85°C	3 V	-2.5	±0.5	+2.5	%
	8-MHz tolerance over temperature		0°C to 85°C	3 V	-2.5	±1	+2.5	%
	12-MHz tolerance over temperature		0°C to 85°C	3 V	-2.5	±1	+2.5	%
	16-MHz tolerance over temperature		0°C to 85°C	3 V	-3	±2	+3	%
$f_{CAL(1MHz)}$	1-MHz calibration value	BCSCTL1 = CALBC1_1MHZ, DCOCTL = CALDCO_1MHZ, Gating time: 5 ms	0°C to 85°C	2.2 V	0.97	1	1.03	MHz
				3 V	0.975	1	1.025	
				3.6 V	0.97	1	1.03	
$f_{CAL(8MHz)}$	8-MHz calibration value	BCSCTL1 = CALBC1_8MHZ, DCOCTL = CALDCO_8MHZ, Gating time: 5 ms	0°C to 85°C	2.2 V	7.76	8	8.4	MHz
				3 V	7.8	8	8.2	
				3.6 V	7.6	8	8.24	
$f_{CAL(12MHz)}$	12-MHz calibration value	BCSCTL1 = CALBC1_12MHZ, DCOCTL = CALDCO_12MHZ, Gating time: 5 ms	0°C to 85°C	2.2 V	11.64	12	12.36	MHz
				3 V	11.64	12	12.36	
				3.6 V	11.64	12	12.36	
$f_{CAL(16MHz)}$	16-MHz calibration value	BCSCTL1 = CALBC1_16MHZ, DCOCTL = CALDCO_16MHZ, Gating time: 2 ms	0°C to 85°C	3 V	15.52	16	16.48	MHz
				3.6 V	15	16	16.48	

Copyright © 2006–2011, Texas Instruments Incorporated

Calibrated DCO Frequencies - Tolerance Over Supply Voltage V_{CC}

over recommended ranges of supply voltage and operating free-air temperature (unless otherwise noted)

PARAMETER		TEST CONDITIONS	T_A	V_{CC}	MIN	TYP	MAX	UNIT
	1-MHz tolerance over V_{CC}		25°C	1.8 V to 3.6 V	-3	±2	+3	%
	8-MHz tolerance over V_{CC}		25°C	1.8 V to 3.6 V	-3	±2	+3	%
	12-MHz tolerance over V_{CC}		25°C	2.2 V to 3.6 V	-3	±2	+3	%
	16-MHz tolerance over V_{CC}		25°C	3 V to 3.6 V	-6	±2	+3	%
$f_{CAL(1MHz)}$	1-MHz calibration value	BCSCTL1 = CALBC1_1MHZ, DCOCTL = CALDCO_1MHZ, Gating time: 5 ms	25°C	1.8 V to 3.6 V	0.97	1	1.03	MHz
$f_{CAL(8MHz)}$	8-MHz calibration value	BCSCTL1 = CALBC1_8MHZ, DCOCTL = CALDCO_8MHZ, Gating time: 5 ms	25°C	1.8 V to 3.6 V	7.76	8	8.24	MHz
$f_{CAL(12MHz)}$	12-MHz calibration value	BCSCTL1 = CALBC1_12MHZ, DCOCTL = CALDCO_12MHZ, Gating time: 5 ms	25°C	2.2 V to 3.6 V	11.64	12	12.36	MHz
$f_{CAL(16MHz)}$	16-MHz calibration value	BCSCTL1 = CALBC1_16MHZ, DCOCTL = CALDCO_16MHZ, Gating time: 2 ms	25°C	3 V to 3.6 V	15	16	16.48	MHz

Calibrated DCO Frequencies - Overall Tolerance

over recommended ranges of supply voltage and operating free-air temperature (unless otherwise noted)

PARAMETER		TEST CONDITIONS	T_A	V_{CC}	MIN	TYP	MAX	UNIT
	1-MHz tolerance overall		-40°C to 105°C	1.8 V to 3.6 V	-5	±2	+5	%
	8-MHz tolerance overall		-40°C to 105°C	1.8 V to 3.6 V	-5	±2	+5	%
	12-MHz tolerance overall		-40°C to 105°C	2.2 V to 3.6 V	-5	±2	+5	%
	16-MHz tolerance overall		-40°C to 105°C	3 V to 3.6 V	-6	±3	+6	%
$f_{CAL(1MHz)}$	1-MHz calibration value	BCSCTL1 = CALBC1_1MHZ, DCOCTL = CALDCO_1MHZ, Gating time: 5 ms	-40°C to 105°C	1.8 V to 3.6 V	0.95	1	1.05	MHz
$f_{CAL(8MHz)}$	8-MHz calibration value	BCSCTL1 = CALBC1_8MHZ, DCOCTL = CALDCO_8MHZ, Gating time: 5 ms	-40°C to 105°C	1.8 V to 3.6 V	7.6	8	8.4	MHz
$f_{CAL(12MHz)}$	12-MHz calibration value	BCSCTL1 = CALBC1_12MHZ, DCOCTL = CALDCO_12MHZ, Gating time: 5 ms	-40°C to 105°C	2.2 V to 3.6 V	11.4	12	12.6	MHz
$f_{CAL(16MHz)}$	16-MHz calibration value	BCSCTL1 = CALBC1_16MHZ, DCOCTL = CALDCO_16MHZ, Gating time: 2 ms	-40°C to 105°C	3 V to 3.6 V	15	16	17	MHz

Copyright © 2006–2011, Texas Instruments Incorporated

Typical Characteristics - Calibrated 1-MHz DCO Frequency

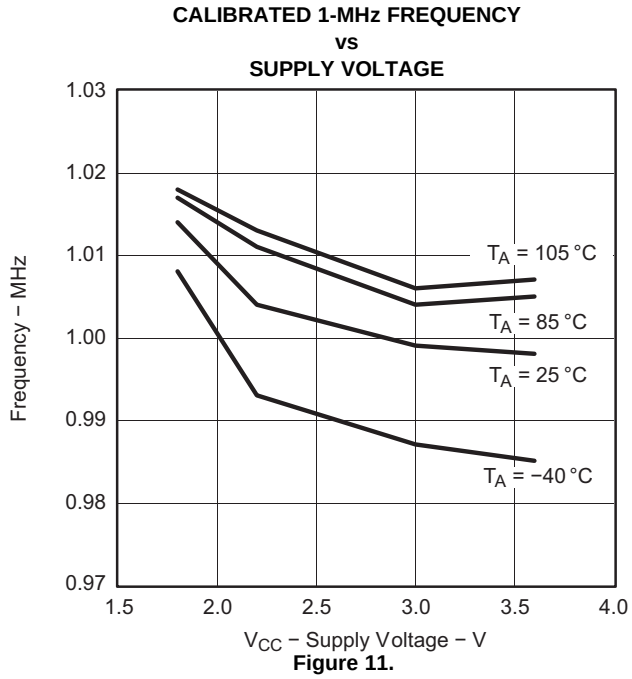

Figure 11.

Wake-Up From Lower-Power Modes (LPM3/4)

over recommended ranges of supply voltage and operating free-air temperature (unless otherwise noted)

PARAMETER		TEST CONDITIONS	V_{CC}	MIN	TYP	MAX	UNIT
$t_{DCO,LPM3/4}$	DCO clock wake-up time from LPM3/4 (1)	BCSCTL1 = CALBC1_1MHZ, DCOCTL = CALDCO_1MHZ	2.2 V/3 V			2	µs
		BCSCTL1 = CALBC1_8MHZ, DCOCTL = CALDCO_8MHZ				1.5	
		BCSCTL1 = CALBC1_12MHZ, DCOCTL = CALDCO_12MHZ				1	
		BCSCTL1 = CALBC1_16MHZ, DCOCTL = CALDCO_16MHZ	3 V			1	
$t_{CPU,LPM3/4}$	CPU wake-up time from LPM3/4 (2)				$1 / f_{MCLK} + t_{Clock,LPM3/4}$		

(1) The DCO clock wake-up time is measured from the edge of an external wake-up signal (for example, a port interrupt) to the first clock edge observable externally on a clock pin (MCLK or SMCLK).
(2) Parameter applicable only if DCOCLK is used for MCLK.

Typical Characteristics - DCO Clock Wake-Up Time From LPM3/4

CLOCK WAKE-UP TIME FROM LPM3
vs
DCO FREQUENCY

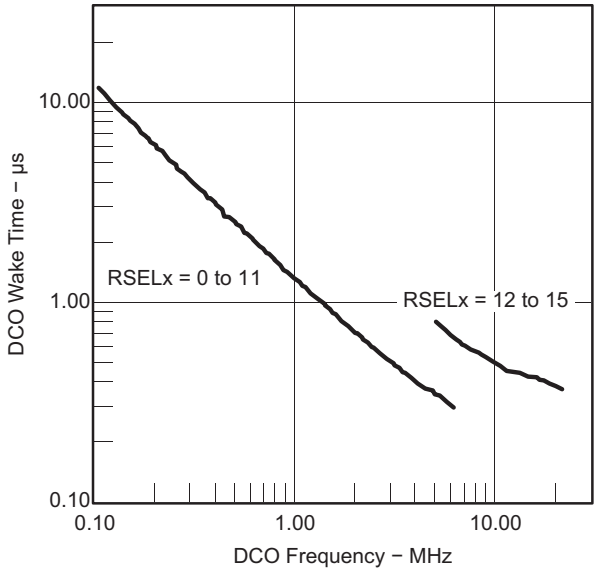

Figure 12.

Copyright © 2006–2011, Texas Instruments Incorporated

DCO With External Resistor R_{OSC} (1)

over recommended ranges of supply voltage and operating free-air temperature (unless otherwise noted)

PARAMETER		TEST CONDITIONS	V_{CC}	MIN	TYP	MAX	UNIT
$f_{DCO,ROSC}$	DCO output frequency with R_{OSC}	DCOR = 1, RSELx = 4, DCOx = 3, MODx = 0, T_A = 25°C	2.2 V		1.8		MHz
			3 V		1.95		
D_T	Temperature drift	DCOR = 1, RSELx = 4, DCOx = 3, MODx = 0	2.2 V/3 V		±0.1		%/°C
D_V	Drift with V_{CC}	DCOR = 1, RSELx = 4, DCOx = 3, MODx = 0	2.2 V/3 V		10		%/V

(1) R_{OSC} = 100 kΩ. Metal film resistor, type 0257, 0.6 W with 1% tolerance and T_K = ±50 ppm/°C.

Typical Characteristics - DCO With External Resistor R_{OSC}

DCO FREQUENCY vs R_{OSC} V_{CC} = 2.2 V, T_A = 25°C

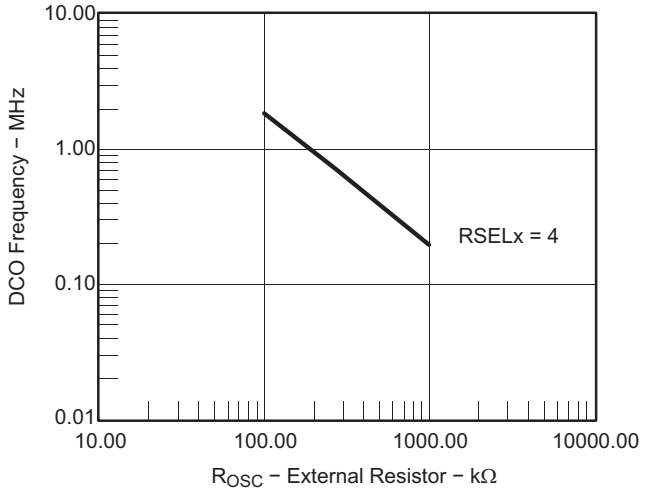

Figure 13.

DCO FREQUENCY vs R_{OSC} V_{CC} = 3 V, T_A = 25°C

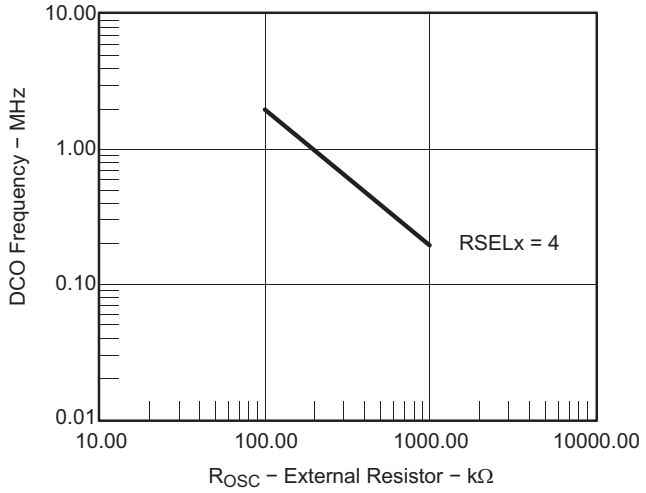

Figure 14.

DCO FREQUENCY vs TEMPERATURE V_{CC} = 3 V

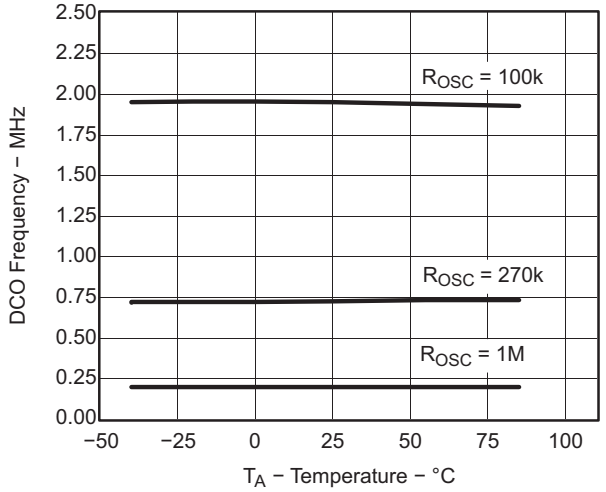

Figure 15.

DCO FREQUENCY vs SUPPLY VOLTAGE T_A = 25°C

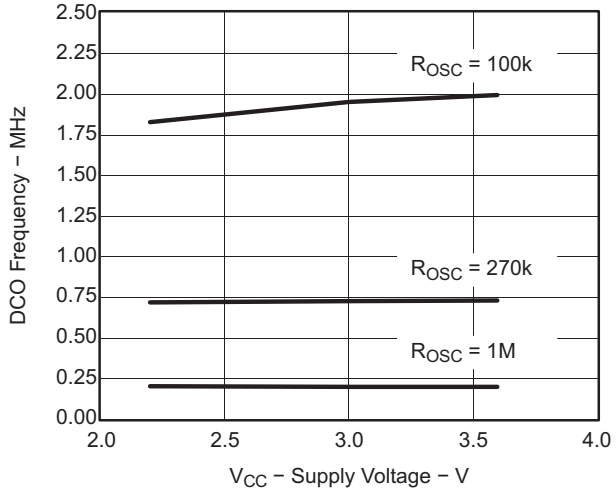

Figure 16.

Copyright © 2006–2011, Texas Instruments Incorporated

Crystal Oscillator LFXT1, Low-Frequency Mode[1]

over recommended ranges of supply voltage and operating free-air temperature (unless otherwise noted)

PARAMETER		TEST CONDITIONS	V_{CC}	MIN	TYP	MAX	UNIT
$f_{LFXT1,LF}$	LFXT1 oscillator crystal frequency, LF mode 0, 1	XTS = 0, LFXT1Sx = 0 or 1	1.8 V to 3.6 V		32768		Hz
$f_{LFXT1,LF,logic}$	LFXT1 oscillator logic level square wave input frequency, LF mode	XTS = 0, XCAPx = 0, LFXT1Sx = 3	1.8 V to 3.6 V	10000	32768	50000	Hz
OA_{LF}	Oscillation allowance for LF crystals	XTS = 0, LFXT1Sx = 0, $f_{LFXT1,LF}$ = 32768 Hz, $C_{L,eff}$ = 6 pF			500		kΩ
		XTS = 0, LFXT1Sx = 0, $f_{LFXT1,LF}$ = 32768 Hz, $C_{L,eff}$ = 12 pF			200		
$C_{L,eff}$	Integrated effective load capacitance, LF mode[2]	XTS = 0, XCAPx = 0			1		pF
		XTS = 0, XCAPx = 1			5.5		
		XTS = 0, XCAPx = 2			8.5		
		XTS = 0, XCAPx = 3			11		
	Duty cycle, LF mode	XTS = 0, Measured at P2.0/ACLK, $f_{LFXT1,LF}$ = 32768 Hz	2.2 V/3 V	30	50	70	%
$f_{Fault,LF}$	Oscillator fault frequency, LF mode[3]	XTS = 0, XCAPx = 0, LFXT1Sx = 3[4]	2.2 V/3 V	10		10000	Hz

(1) To improve EMI on the XT1 oscillator, the following guidelines should be observed.
(a) Keep the trace between the device and the crystal as short as possible.
(b) Design a good ground plane around the oscillator pins.
(c) Prevent crosstalk from other clock or data lines into oscillator pins XIN and XOUT.
(d) Avoid running PCB traces underneath or adjacent to the XIN and XOUT pins.
(e) Use assembly materials and praxis to avoid any parasitic load on the oscillator XIN and XOUT pins.
(f) If conformal coating is used, ensure that it does not induce capacitive/resistive leakage between the oscillator pins.
(g) Do not route the XOUT line to the JTAG header to support the serial programming adapter as shown in other documentation. This signal is no longer required for the serial programming adapter.
(2) Includes parasitic bond and package capacitance (approximately 2 pF per pin).
Because the PCB adds additional capacitance, it is recommended to verify the correct load by measuring the ACLK frequency. For a correct setup, the effective load capacitance should always match the specification of the crystal that is used.
(3) Frequencies below the MIN specification set the fault flag. Frequencies above the MAX specification do not set the fault flag. Frequencies in between might set the flag.
(4) Measured with logic-level input frequency but also applies to operation with crystals.

Internal Very-Low-Power Low-Frequency Oscillator (VLO)

over recommended ranges of supply voltage and operating free-air temperature (unless otherwise noted)

PARAMETER		V_{CC}	MIN	TYP	MAX	UNIT
f_{VLO}	VLO frequency	2.2 V/3 V	4	12	20	kHz
df_{VLO}/dT	VLO frequency temperature drift[1]	2.2 V/3 V		0.5		%/°C
df_{VLO}/dV_{CC}	VLO frequency supply voltage drift[2]	1.8 V to 3.6 V		4		%/V

(1) Calculated using the box method:
I version: [MAX(-40...85°C) - MIN(-40...85°C)]/MIN(-40...85°C)/[85°C - (-40°C)]
T version: [MAX(-40...105°C) - MIN(-40...105°C)]/MIN(-40...105°C)/[105°C - (-40°C)]
(2) Calculated using the box method: [MAX(1.8...3.6 V) - MIN(1.8...3.6 V)]/MIN(1.8...3.6 V)/(3.6 V - 1.8 V)

Copyright © 2006–2011, Texas Instruments Incorporated

Crystal Oscillator LFXT1, High-Frequency Mode[1]

PARAMETER		TEST CONDITIONS	V_{CC}	MIN	TYP	MAX	UNIT
$f_{LFXT1,HF0}$	LFXT1 oscillator crystal frequency, HF mode 0	XTS = 1, XCAPx = 0, LFXT1Sx = 0	1.8 V to 3.6 V	0.4		1	MHz
$f_{LFXT1,HF1}$	LFXT1 oscillator crystal frequency, HF mode 1	XTS = 1, XCAPx = 0, LFXT1Sx = 1	1.8 V to 3.6 V	1		4	MHz
$f_{LFXT1,HF2}$	LFXT1 oscillator crystal frequency, HF mode 2	XTS = 1, XCAPx = 0, LFXT1Sx = 2	1.8 V to 3.6 V	2		10	MHz
			2.2 V to 3.6 V	2		12	
			3 V to 3.6 V	2		16	
$f_{LFXT1,HF,logic}$	LFXT1 oscillator logic-level square-wave input frequency, HF mode	XTS = 1, XCAPx = 0, LFXT1Sx = 3	1.8 V to 3.6 V	0.4		10	MHz
			2.2 V to 3.6 V	0.4		12	
			3 V to 3.6 V	0.4		16	
OA_{HF}	Oscillation allowance for HF crystals (see Figure 17 and Figure 18)	XTS = 1, XCAPx = 0, LFXT1Sx = 0, $f_{LFXT1,HF}$ = 1 MHz, $C_{L,eff}$ = 15 pF			2700		Ω
		XTS = 1, XCAPx = 0, LFXT1Sx = 1, $f_{LFXT1,HF}$ = 4 MHz, $C_{L,eff}$ = 15 pF			800		
		XTS = 1, XCAPx = 0, LFXT1Sx = 2, $f_{LFXT1,HF}$ = 16 MHz, $C_{L,eff}$ = 15 pF			300		
$C_{L,eff}$	Integrated effective load capacitance, HF mode[2]	XTS = 1, XCAPx = 0[3]			1		pF
	Duty cycle, HF mode	XTS = 1, XCAPx = 0, Measured at P2.0/ACLK, $f_{LFXT1,HF}$ = 10 MHz	2.2 V/3 V	40	50	60	%
		XTS = 1, XCAPx = 0, Measured at P2.0/ACLK, $f_{LFXT1,HF}$ = 16 MHz		40	50	60	
$f_{Fault,HF}$	Oscillator fault frequency [4]	XTS = 1, XCAPx = 0, LFXT1Sx = 3[5]	2.2 V/3 V	30		300	kHz

(1) To improve EMI on the XT2 oscillator the following guidelines should be observed:
(a) Keep the trace between the device and the crystal as short as possible.
(b) Design a good ground plane around the oscillator pins.
(c) Prevent crosstalk from other clock or data lines into oscillator pins XIN and XOUT.
(d) Avoid running PCB traces underneath or adjacent to the XIN and XOUT pins.
(e) Use assembly materials and praxis to avoid any parasitic load on the oscillator XIN and XOUT pins.
(f) If conformal coating is used, ensure that it does not induce capacitive/resistive leakage between the oscillator pins.
(g) Do not route the XOUT line to the JTAG header to support the serial programming adapter as shown in other documentation. This signal is no longer required for the serial programming adapter.

(2) Includes parasitic bond and package capacitance (approximately 2 pF per pin). Because the PCB adds additional capacitance, it is recommended to verify the correct load by measuring the ACLK frequency. For a correct setup, the effective load capacitance should always match the specification of the used crystal.

(3) Requires external capacitors at both terminals. Values are specified by crystal manufacturers.

(4) Frequencies below the MIN specification set the fault flag, frequencies above the MAX specification do not set the fault flag, and frequencies in between might set the flag.

(5) Measured with logic-level input frequency, but also applies to operation with crystals.

Copyright © 2006–2011, Texas Instruments Incorporated

Typical Characteristics - LFXT1 Oscillator in HF Mode (XTS = 1)

OSCILLATION ALLOWANCE vs CRYSTAL FREQUENCY
$C_{L,eff}$ = 15 pF, T_A = 25°C

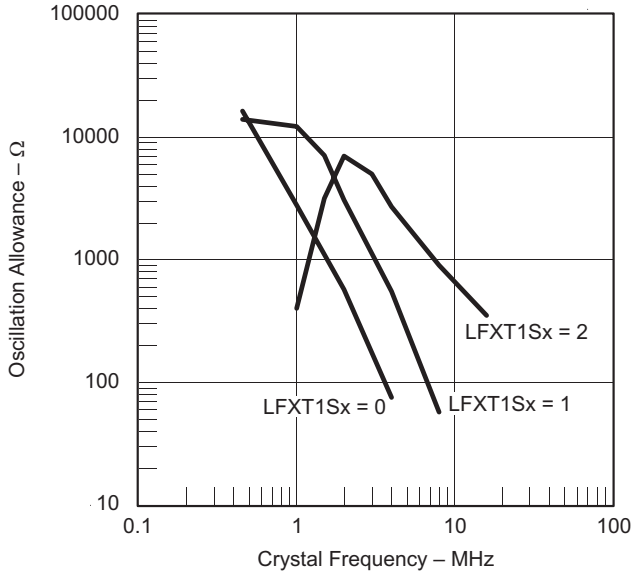

Figure 17.

OSCILLATOR SUPPLY CURRENT vs CRYSTAL FREQUENCY
$C_{L,eff}$ = 15 pF, T_A = 25°C

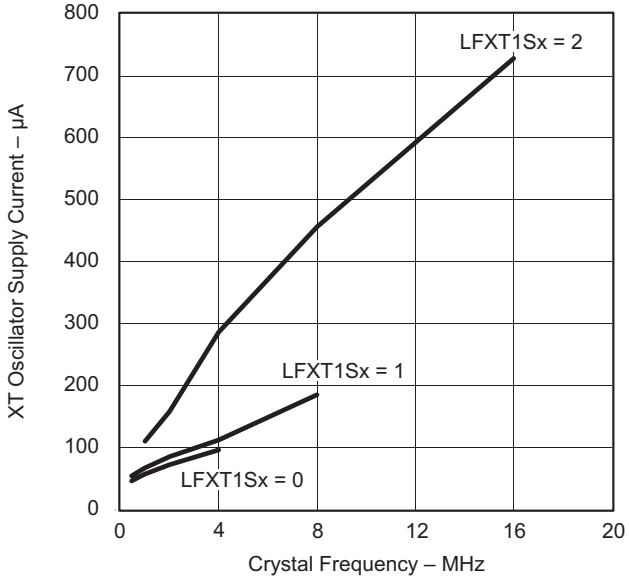

Figure 18.

Copyright © 2006–2011, Texas Instruments Incorporated

Timer_A

over recommended ranges of supply voltage and operating free-air temperature (unless otherwise noted)

PARAMETER		TEST CONDITIONS	V_{CC}	MIN	MAX	UNIT
f_{TA}	Timer_A clock frequency	Internal: SMCLK, ACLK External: TACLK, INCLK Duty cycle = 50% ± 10%	2.2 V		10	MHz
			3 V		16	
$t_{TA,cap}$	Timer_A capture timing	TA0, TA1, TA2	2.2 V/3 V	20		ns

Timer_B

over recommended ranges of supply voltage and operating free-air temperature (unless otherwise noted)

PARAMETER		TEST CONDITIONS	V_{CC}	MIN	MAX	UNIT
f_{TB}	Timer_B clock frequency	Internal: SMCLK, ACLK External: TACLK, INCLK Duty cycle = 50% ± 10%	2.2 V		10	MHz
			3 V		16	
$t_{TB,cap}$	Timer_B capture timing	TB0, TB1, TB2	2.2 V/3 V	20		ns

Copyright © 2006–2011, Texas Instruments Incorporated

USCI (UART Mode)

over recommended ranges of supply voltage and operating free-air temperature (unless otherwise noted)

PARAMETER		CONDITIONS	V_{CC}	MIN	TYP	MAX	UNIT
f_{USCI}	USCI input clock frequency	Internal: SMCLK, ACLK External: UCLK Duty cycle = 50% ± 10%				f_{SYSTEM}	MHz
$f_{max,BITCLK}$	Maximum BITCLK clock frequency (equals baud rate in MBaud)(1)		2.2 V/3 V	2			MHz
t_τ	UART receive deglitch time(2)		2.2 V	50	150		ns
			3 V	50	100		

(1) The DCO wake-up time must be considered in LPM3/4 for baudrates above 1 MHz.
(2) Pulses on the UART receive input (UCxRX) shorter than the UART receive deglitch time are suppressed. To ensure that pulses are correctly recognized their width should exceed the maximum specification of the deglitch time.

USCI (SPI Master Mode)(1)

over recommended ranges of supply voltage and operating free-air temperature (unless otherwise noted)
(see Figure 19 and Figure 20)

PARAMETER		TEST CONDITIONS	V_{CC}	MIN	TYP	MAX	UNIT
f_{USCI}	USCI input clock frequency	SMCLK, ACLK Duty cycle = 50% ± 10%				f_{SYSTEM}	MHz
$t_{SU,MI}$	SOMI input data setup time		2.2 V	110			ns
			3 V	75			
$t_{HD,MI}$	SOMI input data hold time		2.2 V	0			ns
			3 V	0			
$t_{VALID,MO}$	SIMO output data valid time	UCLK edge to SIMO valid, C_L = 20 pF	2.2 V			30	ns
			3 V			20	

(1) $f_{UCxCLK} = 1/2t_{LO/HI}$ with $t_{LO/HI} \geq \max(t_{VALID,MO(USCI)} + t_{SU,SI(Slave)}, t_{SU,MI(USCI)} + t_{VALID,SO(Slave)})$.
For the slave's parameters $t_{SU,SI(Slave)}$ and $t_{VALID,SO(Slave)}$, see the SPI parameters of the attached slave.

USCI (SPI Slave Mode)(1)

over recommended ranges of supply voltage and operating free-air temperature (unless otherwise noted)
(see Figure 21 and Figure 22)

PARAMETER		TEST CONDITIONS	V_{CC}	MIN	TYP	MAX	UNIT
$t_{STE,LEAD}$	STE lead time, STE low to clock		2.2 V/3 V		50		ns
$t_{STE,LAG}$	STE lag time, Last clock to STE high		2.2 V/3 V	10			ns
$t_{STE,ACC}$	STE access time, STE low to SOMI data out		2.2 V/3 V		50		ns
$t_{STE,DIS}$	STE disable time, STE high to SOMI high impedance		2.2 V/3 V		50		ns
$t_{SU,SI}$	SIMO input data setup time		2.2 V	20			ns
			3 V	15			
$t_{HD,SI}$	SIMO input data hold time		2.2 V	10			ns
			3 V	10			
$t_{VALID,SO}$	SOMI output data valid time	UCLK edge to SOMI valid, C_L = 20 pF	2.2 V		75	110	ns
			3 V		50	75	

(1) $f_{UCxCLK} = 1/2t_{LO/HI}$ with $t_{LO/HI} \geq \max(t_{VALID,MO(Master)} + t_{SU,SI(USCI)}, t_{SU,MI(Master)} + t_{VALID,SO(USCI)})$.
For the master's parameters $t_{SU,MI(Master)}$ and $t_{VALID,MO(Master)}$ refer to the SPI parameters of the attached slave.

Copyright © 2006–2011, Texas Instruments Incorporated

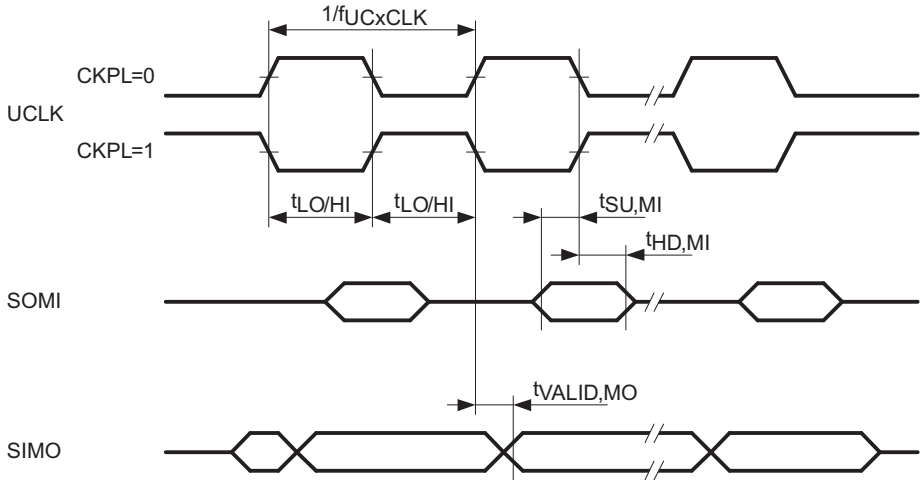

Figure 19. SPI Master Mode, CKPH = 0

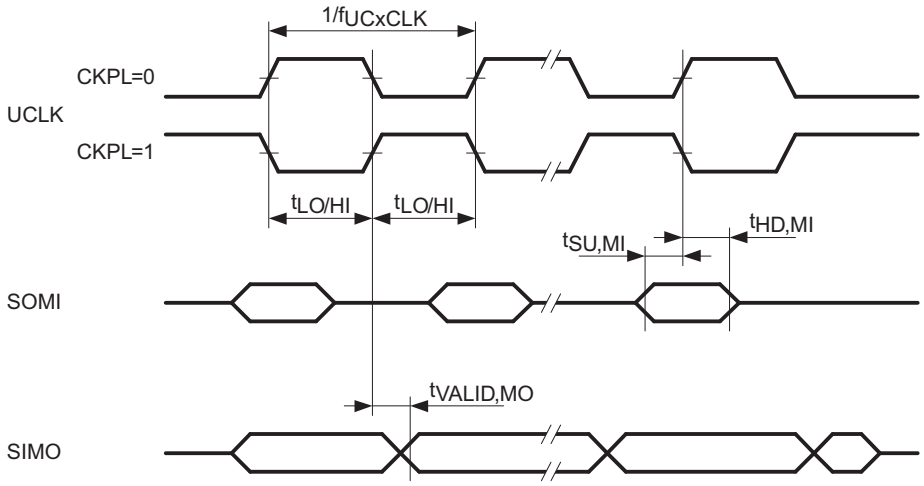

Figure 20. SPI Master Mode, CKPH = 1

Copyright © 2006–2011, Texas Instruments Incorporated

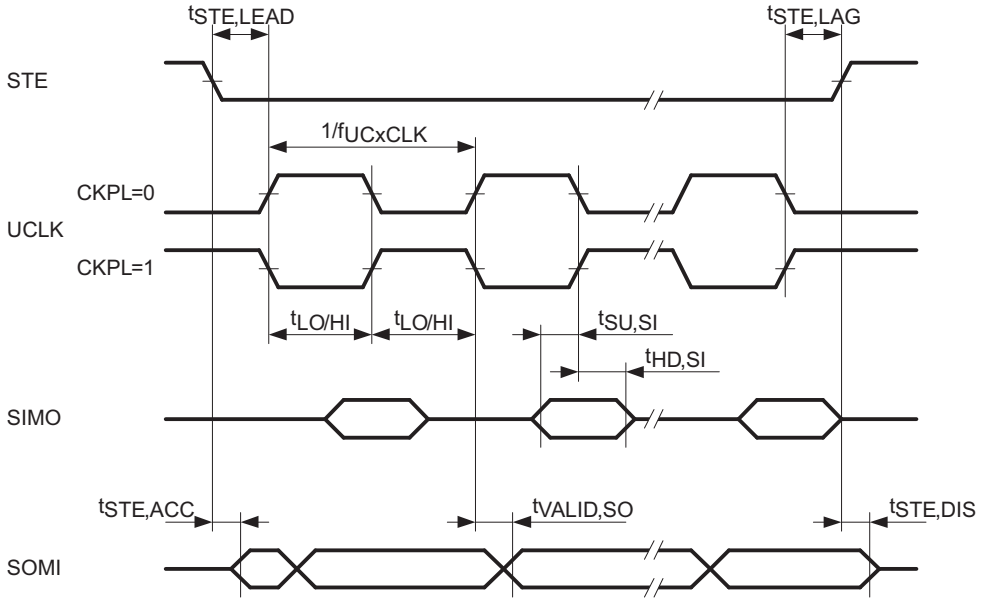

Figure 21. SPI Slave Mode, CKPH = 0

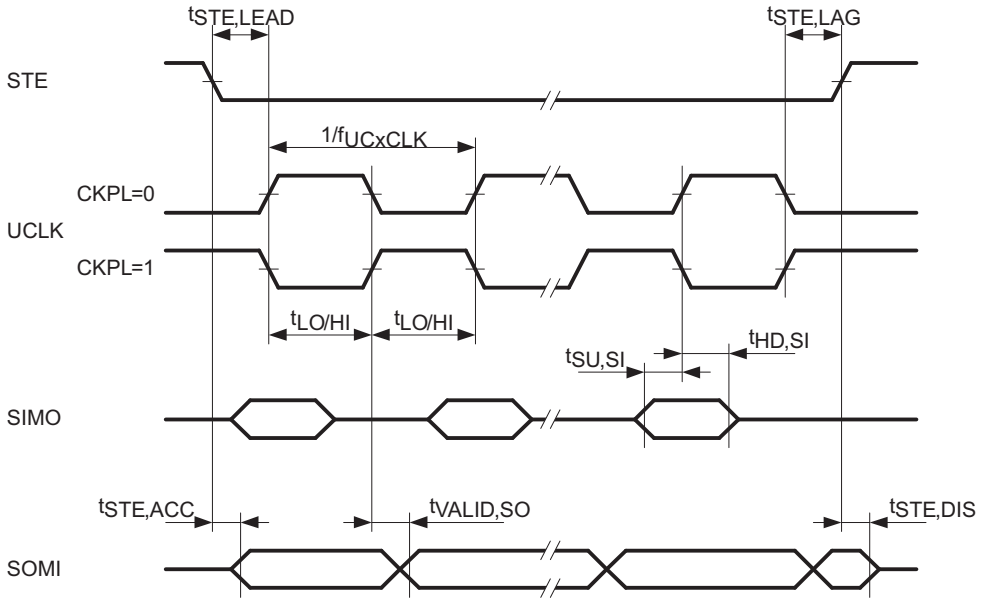

Figure 22. SPI Slave Mode, CKPH = 1

Copyright © 2006–2011, Texas Instruments Incorporated

USCI (I2C Mode)

over recommended ranges of supply voltage and operating free-air temperature (unless otherwise noted) (see Figure 23)

PARAMETER		TEST CONDITIONS	V_{CC}	MIN	TYP	MAX	UNIT
f_{USCI}	USCI input clock frequency	Internal: SMCLK, ACLK External: UCLK Duty cycle = 50% ± 10%				f_{SYSTEM}	MHz
f_{SCL}	SCL clock frequency		2.2 V/3 V	0		400	kHz
$t_{HD,STA}$	Hold time (repeated) START	f_{SCL} ≤ 100 kHz	2.2 V/3 V	4			µs
		f_{SCL} > 100 kHz		0.6			
$t_{SU,STA}$	Setup time for a repeated START	f_{SCL} ≤ 100 kHz	2.2 V/3 V	4.7			µs
		f_{SCL} > 100 kHz		0.6			
$t_{HD,DAT}$	Data hold time		2.2 V/3 V	0			ns
$t_{SU,DAT}$	Data setup time		2.2 V/3 V	250			ns
$t_{SU,STO}$	Setup time for STOP		2.2 V/3 V	4			µs
t_{SP}	Pulse width of spikes suppressed by input filter		2.2 V	50	150	600	ns
			3 V	50	100	600	

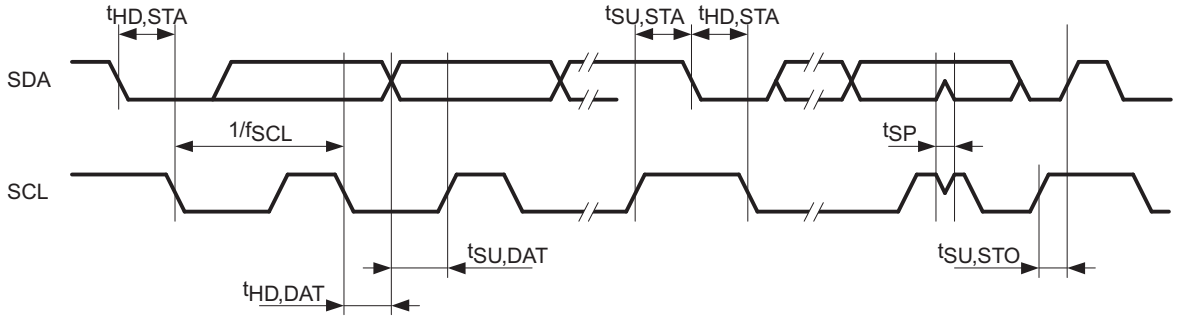

Figure 23. I2C Mode Timing

Copyright © 2006–2011, Texas Instruments Incorporated

Comparator_A+[1]

over recommended operating free-air temperature range (unless otherwise noted)

PARAMETER		TEST CONDITIONS	V_{CC}	MIN	TYP	MAX	UNIT
$I_{(DD)}$		CAON = 1, CARSEL = 0, CAREF = 0	2.2 V		25	40	µA
			3 V		45	60	
$I_{(Refladder/RefDiode)}$		CAON = 1, CARSEL = 0, CAREF = 1/2/3, No load at P2.3/CA0 and P2.4/CA1	2.2 V		30	50	µA
			3 V		45	71	
V_{IC}	Common-mode input voltage range	CAON = 1	2.2 V/3 V	0		V_{CC} - 1	V
$V_{(Ref025)}$	Voltage at 0.25 V_{CC} node / V_{CC}	PCA0 = 1, CARSEL = 1, CAREF = 1, No load at P2.3/CA0 and P2.4/CA1	2.2 V/3 V	0.23	0.24	0.25	
$V_{(Ref050)}$	Voltage at 0.5 V_{CC} node / V_{CC}	PCA0 = 1, CARSEL = 1, CAREF = 2, No load at P2.3/CA0 and P2.4/CA1	2.2 V/3 V	0.47	0.48	0.5	
$V_{(RefVT)}$	See Figure 27 and Figure 28	PCA0 = 1, CARSEL = 1, CAREF = 3, No load at P2.3/CA0 and P2.4/CA1, T_A = 85°C	2.2 V	390	480	540	mV
			3 V	400	490	550	
$V_{(offset)}$	Offset voltage[2]		2.2 V/3 V	-30		30	mV
V_{hys}	Input hysteresis	CAON = 1	2.2 V/3 V	0	0.7	1.4	mV
$t_{(response)}$	Response time (low-high and high-low)	T_A = 25°C, Overdrive 10 mV, Without filter: CAF = 0[3] (see Figure 24 and Figure 25)	2.2 V	80	165	300	ns
			3 V	70	120	240	
		T_A = 25°C, Overdrive 10 mV, With filter: CAF = 1[3] (see Figure 24 and Figure 25)	2.2 V	1.4	1.9	2.8	µs
			3 V	0.9	1.5	2.2	

(1) The leakage current for the Comparator_A+ terminals is identical to $I_{lkg(Px.y)}$ specification.
(2) The input offset voltage can be cancelled by using the CAEX bit to invert the Comparator_A+ inputs on successive measurements. The two successive measurements are then summed together.
(3) Response time measured at P2.2/CAOUT/TA0/CA4.

Copyright © 2006–2011, Texas Instruments Incorporated

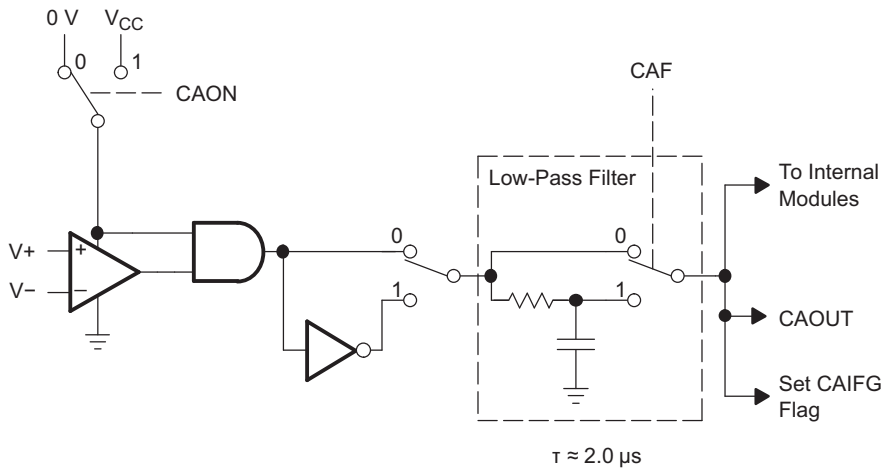

Figure 24. Comparator_A+ Module Block Diagram

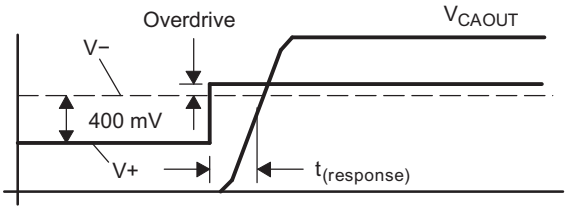

Figure 25. Overdrive Definition

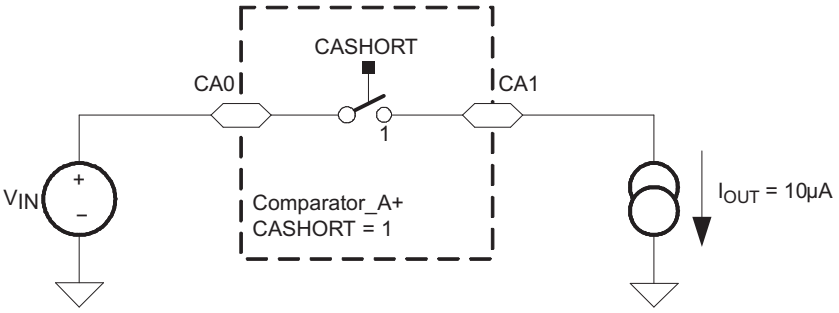

Figure 26. Comparator_A+ Short Resistance Test Condition

Copyright © 2006–2011, Texas Instruments Incorporated

Typical Characteristics - Comparator_A+

$V_{(RefVT)}$ vs TEMPERATURE V_{CC} = 2.2 V

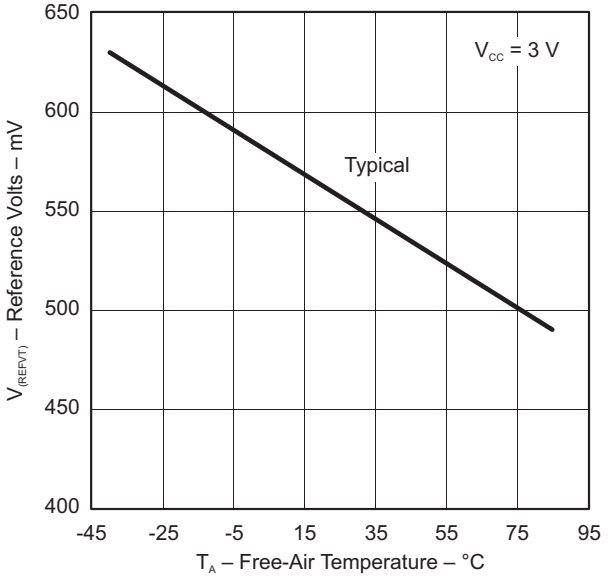

Figure 27.

$V_{(RefVT)}$ vs TEMPERATURE V_{CC} = 2.2 V

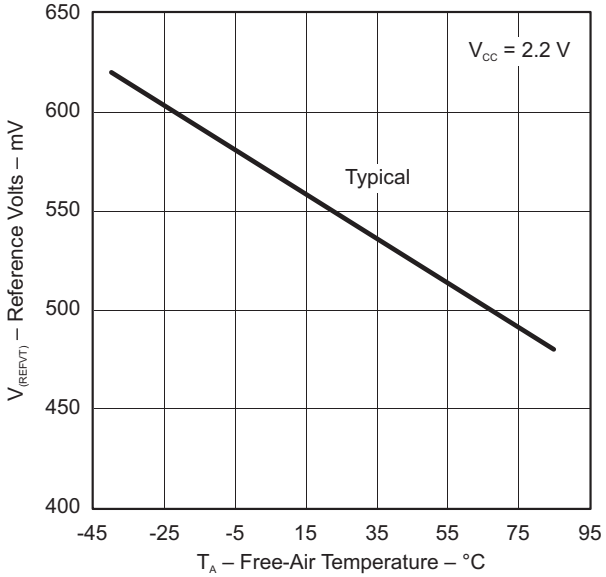

Figure 28.

SHORT RESISTANCE vs V_{IN}/V_{CC}

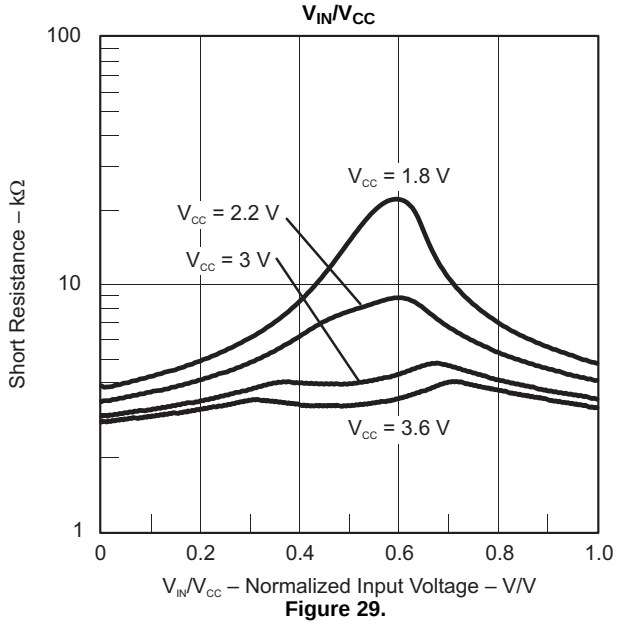

Figure 29.

Copyright © 2006–2011, Texas Instruments Incorporated

Flash Memory

over recommended ranges of supply voltage and operating free-air temperature (unless otherwise noted)

PARAMETER		TEST CONDITIONS	V_{CC}	MIN	TYP	MAX	UNIT
$V_{CC\ (PGM/ERASE)}$	Program and erase supply voltage			2.2		3.6	V
f_{FTG}	Flash timing generator frequency			257		476	kHz
I_{PGM}	Supply current from V_{CC} during program		2.2 V/3.6 V		1	5	mA
I_{ERASE}	Supply current from V_{CC} during erase		2.2 V/3.6 V		1	7	mA
t_{CPT}	Cumulative program time (1)		2.2 V/3.6 V			10	ms
$t_{CMErase}$	Cumulative mass erase time		2.2 V/3.6 V	20			ms
	Program/erase endurance			10^4	10^5		cycles
$t_{Retention}$	Data retention duration	T_J = 25°C		100			years
t_{Word}	Word or byte program time	See (2)			30		t_{FTG}
$t_{Block,\ 0}$	Block program time for first byte or word	See (2)			25		t_{FTG}
$t_{Block,\ 1-63}$	Block program time for each additional byte or word	See (2)			18		t_{FTG}
$t_{Block,\ End}$	Block program end-sequence wait time	See (2)			6		t_{FTG}
$t_{Mass\ Erase}$	Mass erase time	See (2)			10593		t_{FTG}
$t_{Seg\ Erase}$	Segment erase time	See (2)			4819		t_{FTG}

(1) The cumulative program time must not be exceeded when writing to a 64-byte flash block. This parameter applies to all programming methods: individual word/byte write and block write modes.
(2) These values are hardwired into the flash controller's state machine ($t_{FTG} = 1/f_{FTG}$).

RAM

over recommended ranges of supply voltage and operating free-air temperature (unless otherwise noted)

PARAMETER		TEST CONDITIONS	MIN	MAX	UNIT
$V_{(RAMh)}$	RAM retention supply voltage (1)	CPU halted	1.6		V

(1) This parameter defines the minimum supply voltage V_{CC} when the data in RAM remains unchanged. No program execution should happen during this supply voltage condition.

JTAG Interface

over recommended ranges of supply voltage and operating free-air temperature (unless otherwise noted)

PARAMETER		V_{CC}	MIN	TYP	MAX	UNIT
f_{TCK}	TCK input frequency (1)	2.2 V	0		5	MHz
		3 V	0		10	MHz
$R_{Internal}$	Internal pulldown resistance on TEST (2)	2.2 V/3 V	25	35	55	kΩ

(1) f_{TCK} may be restricted to meet the timing requirements of the module selected.
(2) TMS, TDI/TCLK, and TCK pullup resistors are implemented in all versions.

JTAG Fuse (1)

over recommended ranges of supply voltage and operating free-air temperature (unless otherwise noted)

PARAMETER		TEST CONDITIONS	MIN	MAX	UNIT
$V_{CC(FB)}$	Supply voltage during fuse-blow condition	T_A = 25°C	2.5		V
V_{FB}	Voltage level on TEST for fuse blow		6	7	V
I_{FB}	Supply current into TEST during fuse blow			100	mA
t_{FB}	Time to blow fuse			1	ms

(1) After the fuse is blown, no further access to the JTAG/Test and emulation features is possible, and the JTAG block is switched to bypass mode.

Copyright © 2006–2011, Texas Instruments Incorporated

APPLICATION INFORMATION

Port P1 Pin Schematic: P1.0 to P1.7, Input/Output With Schmitt Trigger

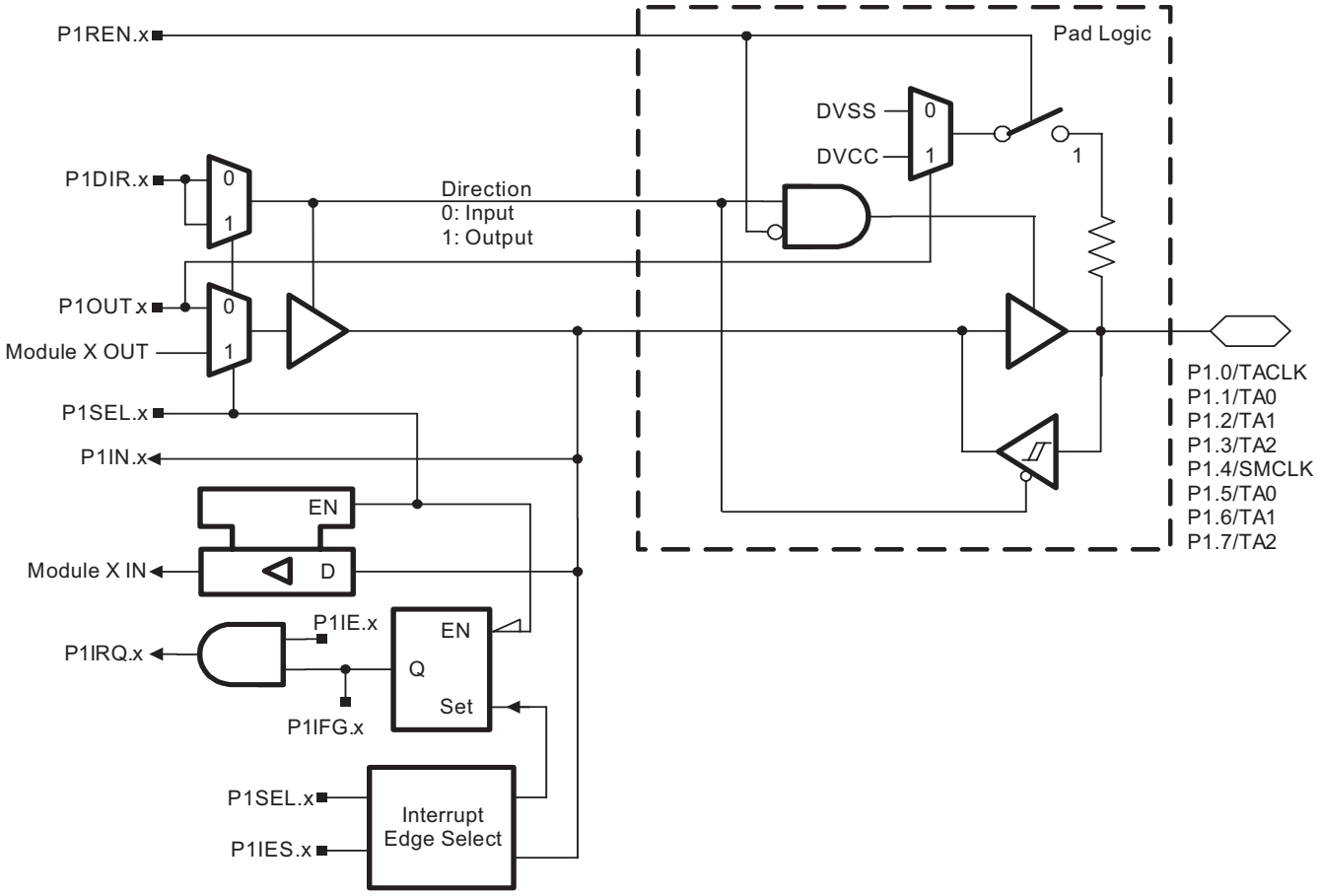

Copyright © 2006–2011, Texas Instruments Incorporated

Table 18. Port P1 (P1.0 to P1.7) Pin Functions

PIN NAME (P1.x)	x	FUNCTION	CONTROL BITS / SIGNALS	
			P1DIR.x	P1SEL.x
P1.0/TACLK	0	P1.0 (I/O)	I: 0, O: 1	0
		Timer_A3.TACLK	0	1
		DVSS	1	1
P1.1/TA0	1	P1.1 (I/O)	I: 0, O: 1	0
		Timer_A3.CCI0A	0	1
		Timer_A3.TA0	1	1
P1.2/TA1	2	P1.2 (I/O)	I: 0, O: 1	0
		Timer_A3.CCI0A	0	1
		Timer_A3.TA0	1	1
P1.3/TA2	3	P1.3 (I/O)	I: 0, O: 1	0
		Timer_A3.CCI0A	0	1
		Timer_A3.TA0	1	1
P1.4/SMCLK	4	P1.4 (I/O)	I: 0, O: 1	0
		SMCLK	1	1
P1.5/TA0	5	P1.5 (I/O)	I: 0, O: 1	0
		Timer_A3.CCI0A	0	1
		Timer_A3.TA0	1	1
P1.6/TA1	6	P1.6 (I/O)	I: 0, O: 1	0
		Timer_A3.CCI0A	0	1
		Timer_A3.TA1	1	1
P1.7/TA2	7	P1.7 (I/O)	I: 0, O: 1	0
		Timer_A3.CCI0A	0	1
		Timer_A3.TA2	1	1

Copyright © 2006–2011, Texas Instruments Incorporated

Port P2 Pin Schematic: P2.0 to P2.4, Input/Output With Schmitt Trigger

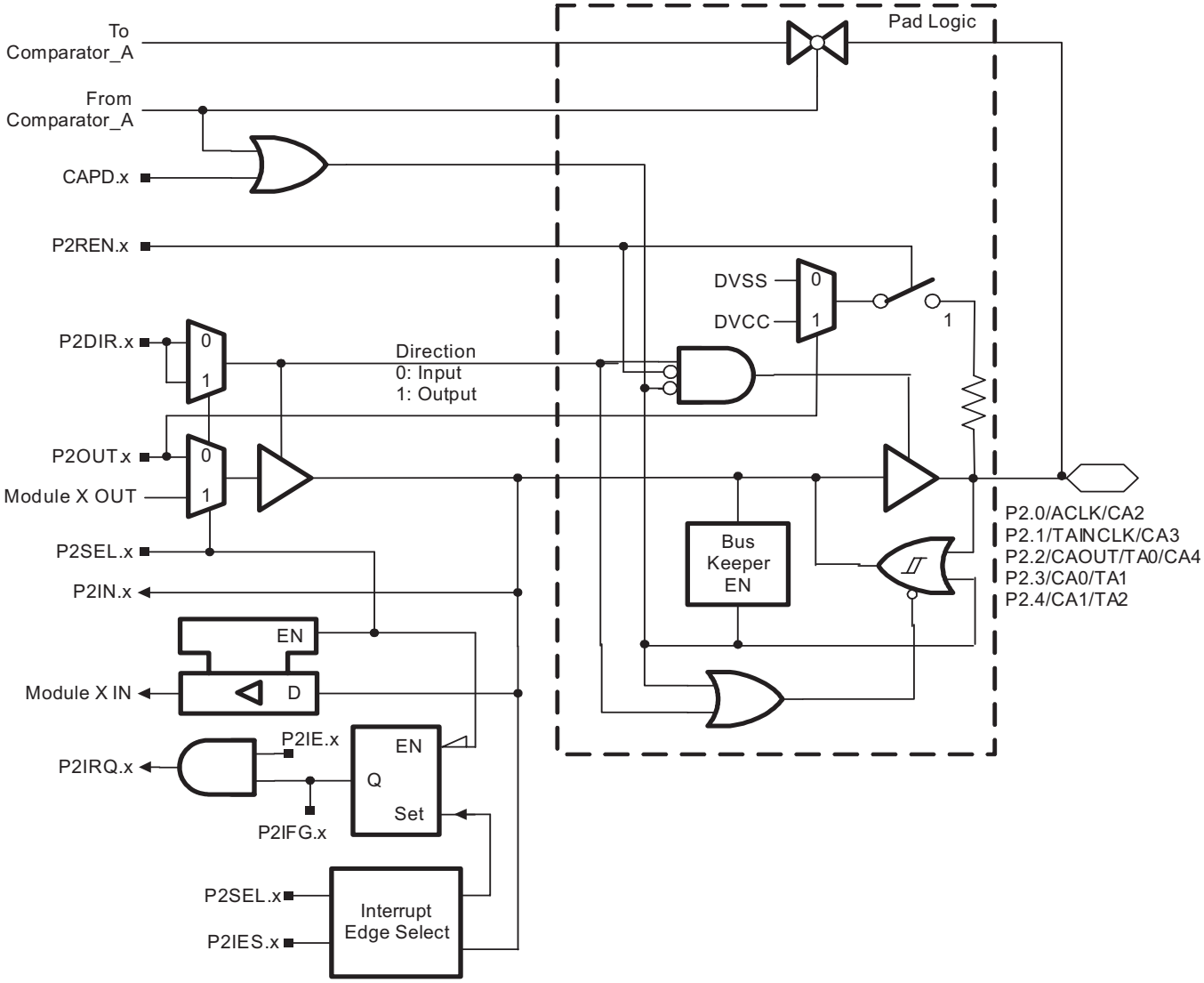

Copyright © 2006–2011, Texas Instruments Incorporated

Table 19. Port P2 (P2.0 to P2.4) Pin Functions

PIN NAME (P2.x)	x	FUNCTION	CONTROL BITS / SIGNALS (1)		
			CAPD.x	P2DIR.x	P2SEL.x
P2.0/ACLK/CA2	0	P2.0 (I/O)	0	I: 0, O: 1	0
		ACLK	0	1	1
		CA2 (2)	1	X	X
P2.1/TAINCLK/CA3	1	P2.1 (I/O)	0	I: 0, O: 1	0
		Timer_A3.TAINCLK	0	0	1
		DVSS	0	1	1
		CA3 (2)	1	X	X
P2.2/CAOUT/TA0/CA4	2	P2.2 (I/O)	0	I: 0, O: 1	0
		CAOUT	0	1	1
		TA0	0	0	1
		CA4 (2)	1	X	X
P2.3/CA0/TA1	3	P2.3 (I/O)	0	I: 0, O: 1	0
		CA0 (2)	1	X	X
		Timer_A3.TA1	0	1	1
P2.4/CA1/TA2	4	P2.4 (I/O)	0	I: 0, O: 1	0
		CA1 (2)	1	X	X
		Timer_A3.TA2	0	1	1

(1) X = Don't care
(2) Setting theCAPD.xbit disables the output driver as well as the input to prevent parasitic cross currentswhenapplying analog signals. Selecting the CAx input to the comparator multiplexer with the P2CAx bits automatically disables the input buffer for that pin, regardless of the state of the associated CAPD.x bit.

Copyright © 2006–2011, Texas Instruments Incorporated

Port P2 Pin Schematic: P2.5, Input/Output With Schmitt Trigger

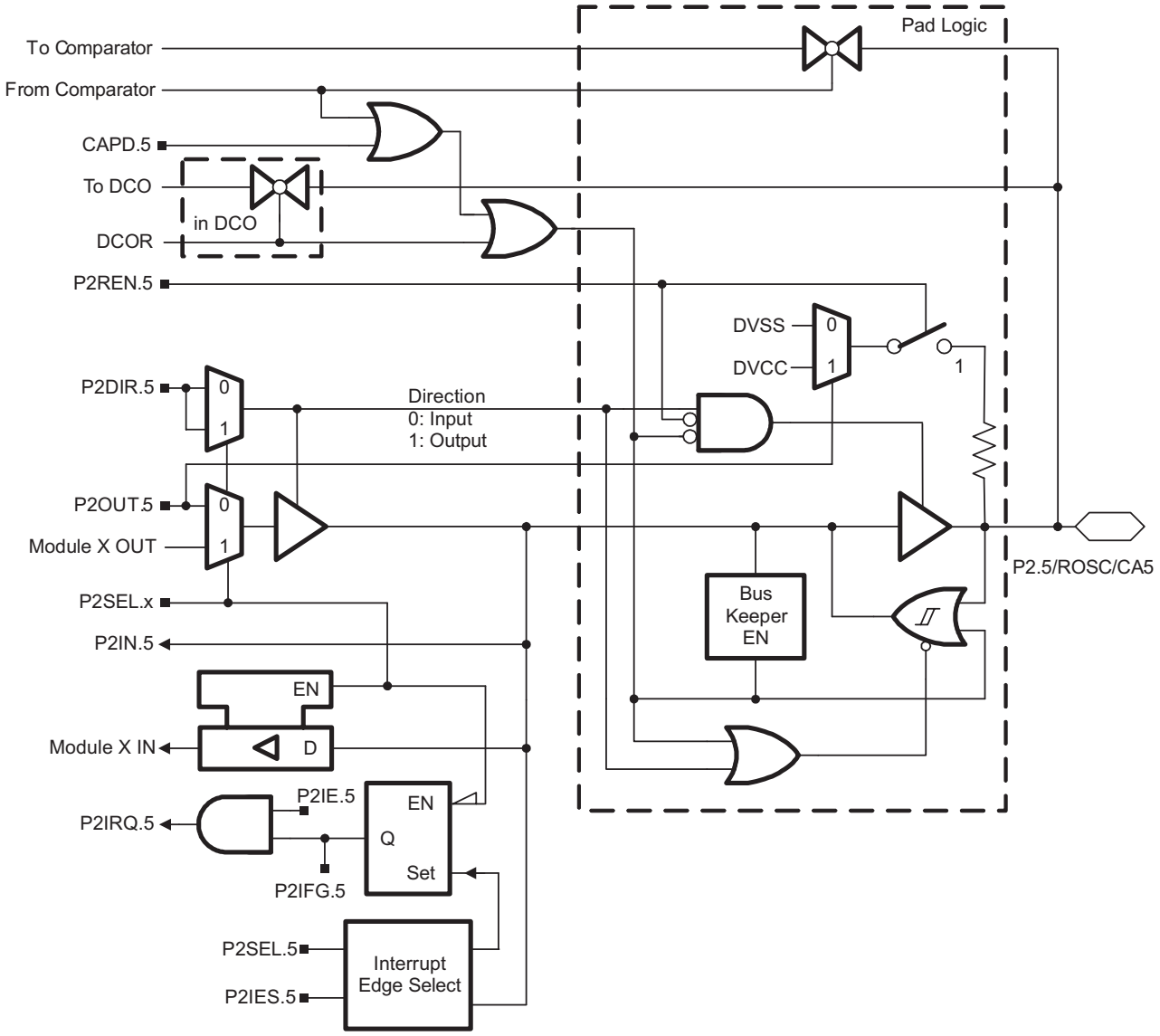

Table 20. Port P2 (P2.5) Pin Functions

PIN NAME (P2.x)	x	FUNCTION	CONTROL BITS / SIGNALS(1)			
			CAPD.5	DCOR	P2DIR.5	P2SEL.5
P2.5/R_{OSC}/CA5	5	P2.5 (I/O)	0	0	I: 0, O: 1	0
		R_{OSC}	0	1	X	X
		DV_{SS}	0	0	1	1
		CA5(2)	1	0	X	X

(1) X = Don't care
(2) Setting theCAPD.xbit disables the output driver as well as the input to prevent parasitic cross currentswhenapplying analog signals. Selecting the CAx input to the comparator multiplexer with the P2CAx bits automatically disables the input buffer for that pin, regardless of the state of the associated CAPD.x bit.

Copyright © 2006–2011, Texas Instruments Incorporated

Port P2 Pin Schematic: P2.6, Input/Output With Schmitt Trigger

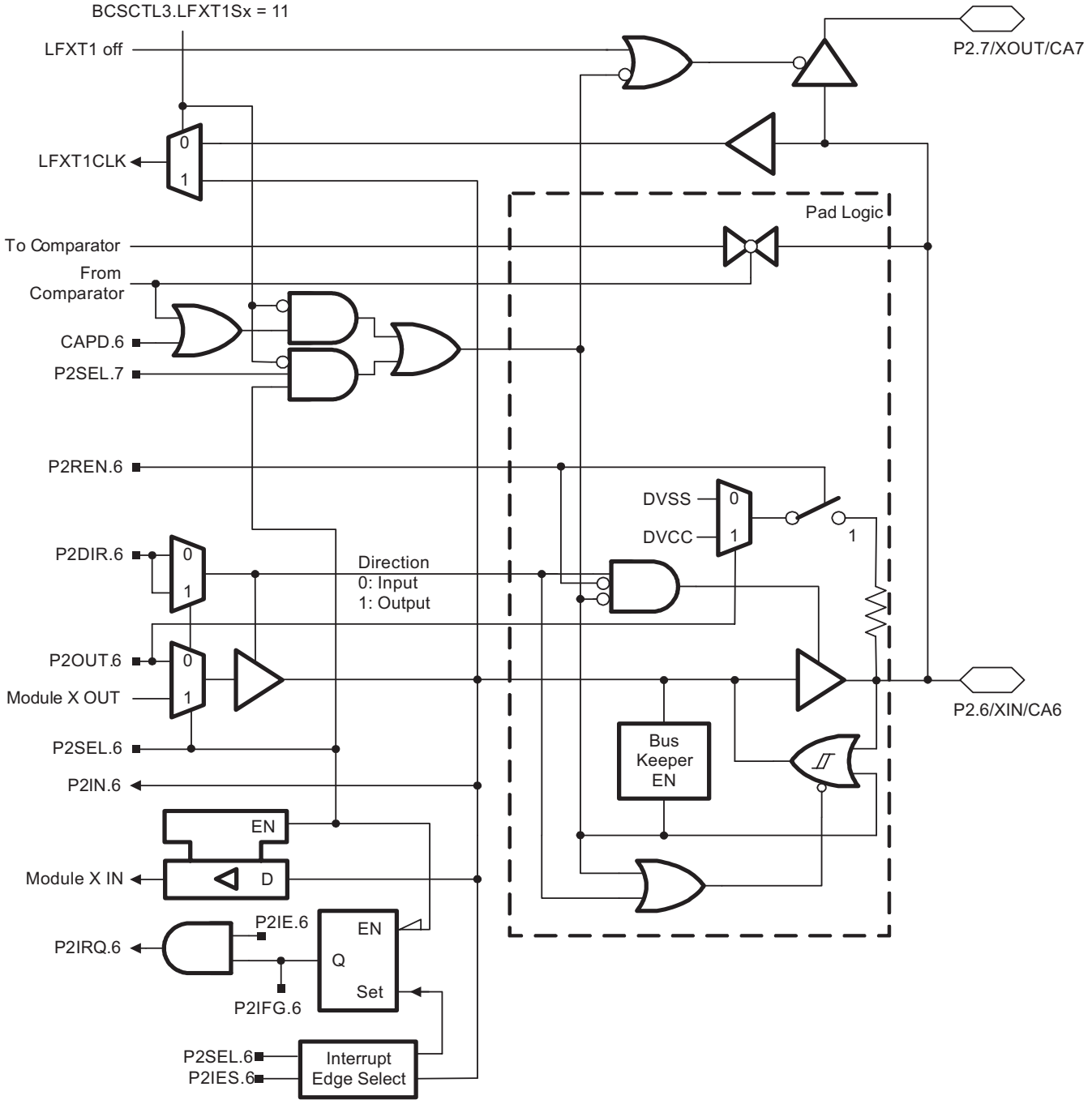

Table 21. Port P2 (P2.6) Pin Functions

PIN NAME (P2.x)	x	FUNCTION	CONTROL BITS / SIGNALS (1)		
			CAPD.6	P2DIR.6	P2SEL.6
P2.6/XIN/CA6	6	P2.6 (I/O)	0	I: 0, O: 1	0
		XIN (default)	X	1	1
		CA6 (2)	1	X	0

(1) X = Don't care
(2) Setting theCAPD.xbit disables the output driver as well as the input to prevent parasitic cross currentswhenapplying analog signals. Selecting the CAx input to the comparator multiplexer with the P2CAx bits automatically disables the input buffer for that pin, regardless of the state of the associated CAPD.x bit.

Copyright © 2006–2011, Texas Instruments Incorporated

Port P2 Pin Schematic: P2.7, Input/Output With Schmitt Trigger

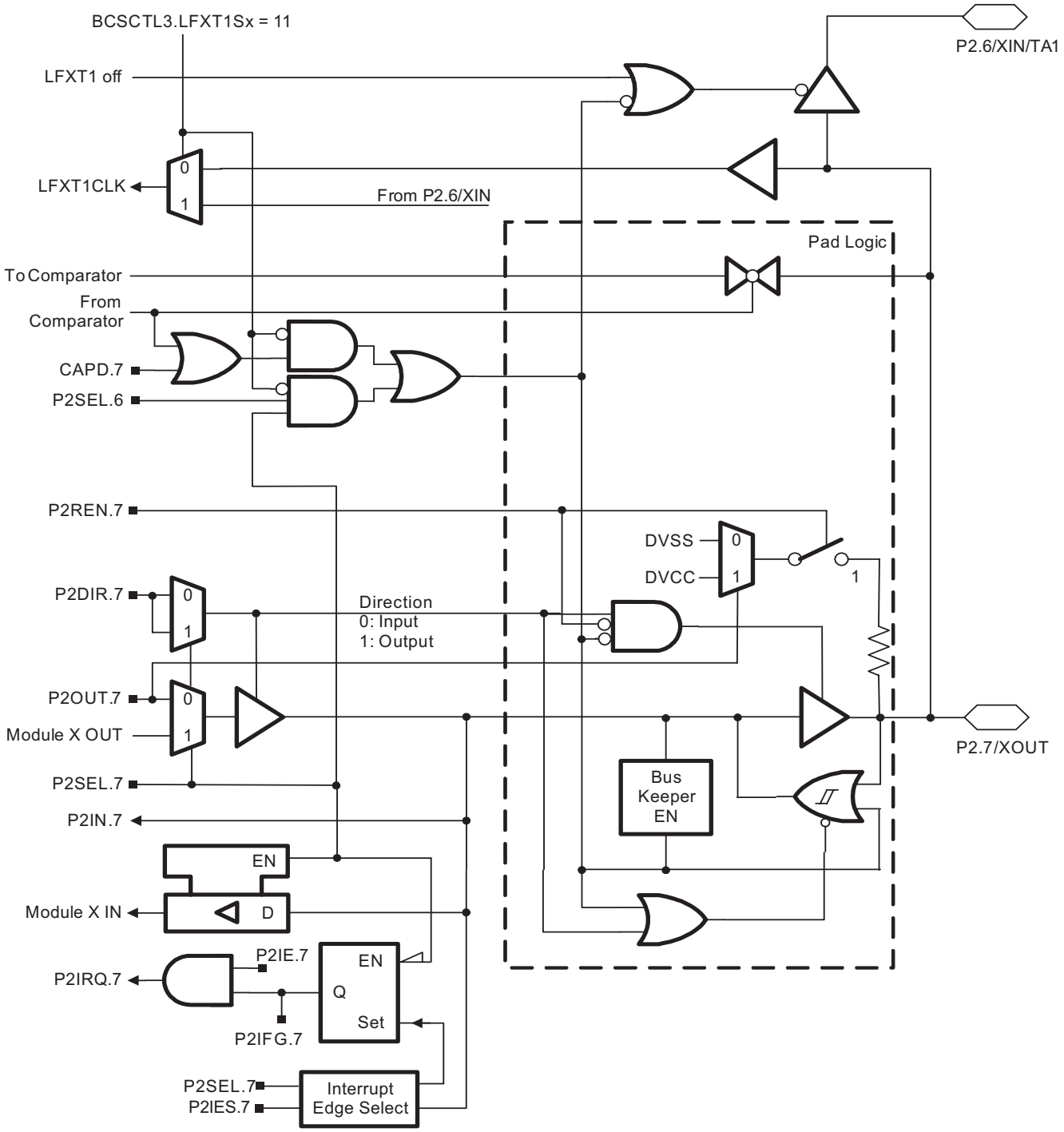

Table 22. Port P2 (P2.7) Pin Functions

PIN NAME (P2.x)	x	FUNCTION	CONTROL BITS / SIGNALS (1)		
			CAPD.7	P2DIR.7	P2SEL.7
P2.7/XOUT/CA7	7	P2.7 (I/O)	0	I: 0, O: 1	0
		XOUT (default)	X	1	1
		CA7 (2)	1	X	0

(1) X = Don't care
(2) Setting theCAPD.xbit disables the output driver as well as the input to prevent parasitic cross currentswhenapplying analog signals. Selecting the CAx input to the comparator multiplexer with the P2CAx bits automatically disables the input buffer for that pin, regardless of the state of the associated CAPD.x bit.

Copyright © 2006–2011, Texas Instruments Incorporated

Port P3 Pin Schematic: P3.0 to P3.5, Input/Output With Schmitt Trigger

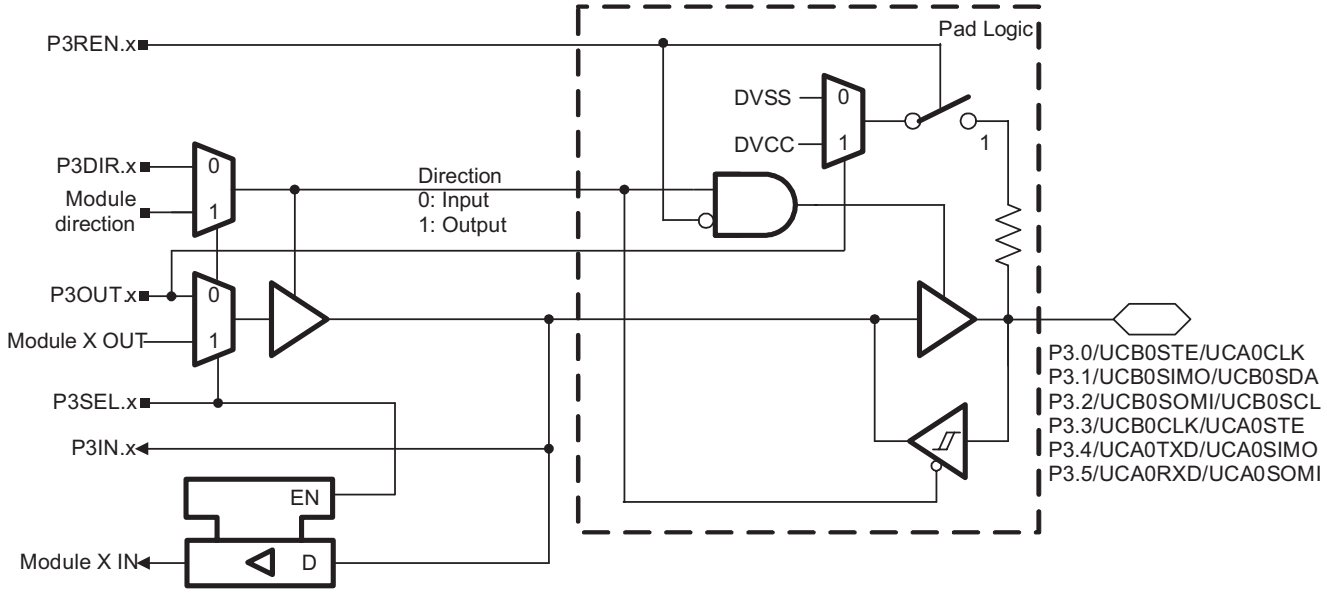

Table 23. Port P3 (P3.0 to P3.5) Pin Functions

PIN NAME (P3.x)	x	FUNCTION	CONTROL BITS / SIGNALS (1)	
			P3DIR.x	P3SEL.x
P3.0/UCB0STE/ UCA0CLK	0	P3.0 (I/O)	I: 0, O: 1	0
		UCB0STE/UCA0CLK (2)	X	1
P3.1/UCB0SIMO/ UCB0SDA	1	P3.1 (I/O)	I: 0, O: 1	0
		UCB0SIMO/UCB0SDA (2) (3)	X	1
P3.2/UCB0SOMI/ UCB0SCL	2	P3.2 (I/O)	I: 0, O: 1	0
		UCB0SOMI/UCB0SCL (2) (3)	X	1
P3.3/UCB0CLK/ UCA0STE	3	P3.3 (I/O)	I: 0, O: 1	0
		UCB0CLK/UCA0STE (2)	X	1
P3.4/UCA0TXD/ UCA0SIMO	4	P3.4 (I/O)	I: 0, O: 1	0
		UCA0TXD/UCA0SIMO (2)	X	1
P3.5/UCA0RXD/ UCA0SOMI	5	P3.5 (I/O)	I: 0, O: 1	0
		UCA0RXD/UCA0SOMI (2)	X	1

(1) X = Don't care
(2) The pin direction is controlled by the USCI module.
(3) If the I2C functionality is selected, the output drives only the logical 0 to V_{SS} level.

Copyright © 2006–2011, Texas Instruments Incorporated

Port P3 Pin Schematic: P3.6 and P3.7, Input/Output With Schmitt Trigger

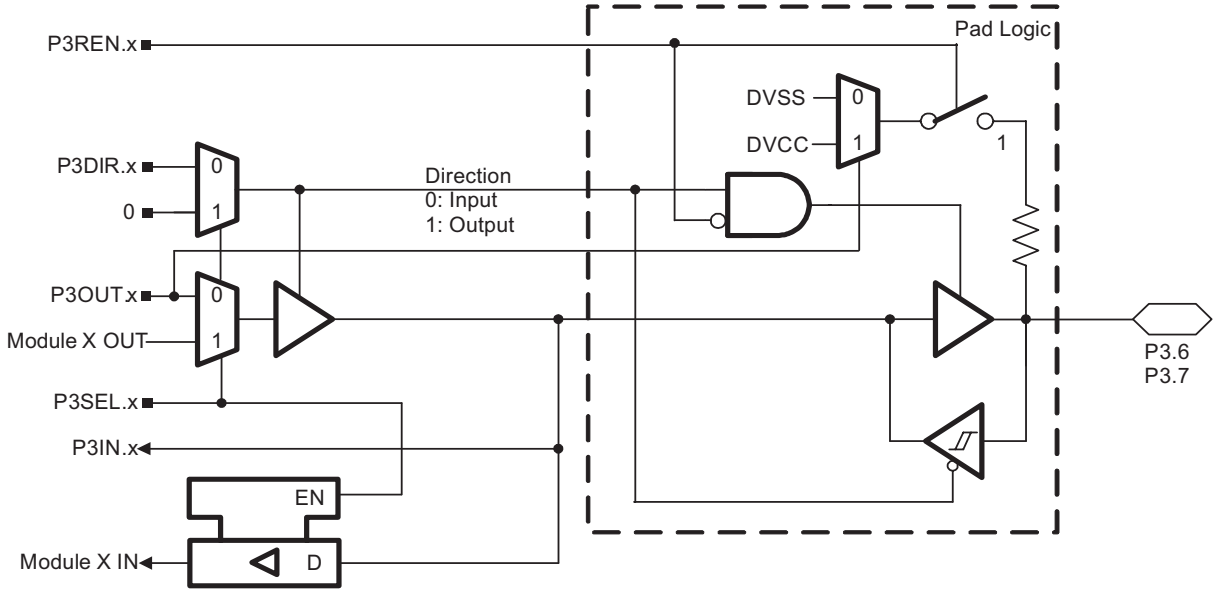

Table 24. Port P3 (P3.6 and P3.7) Pin Functions

PIN NAME (P3.x)	x	FUNCTION	CONTROL BITS / SIGNALS	
			P3DIR.x	P3SEL.x
P3.6	6	P3.6 (I/O)	I: 0, O: 1	0
P3.7	7	P3.7 (I/O)	I: 0, O: 1	0

Copyright © 2006–2011, Texas Instruments Incorporated

Port P4 Pin Schematic: P4.0 to P4.7, Input/Output With Schmitt Trigger

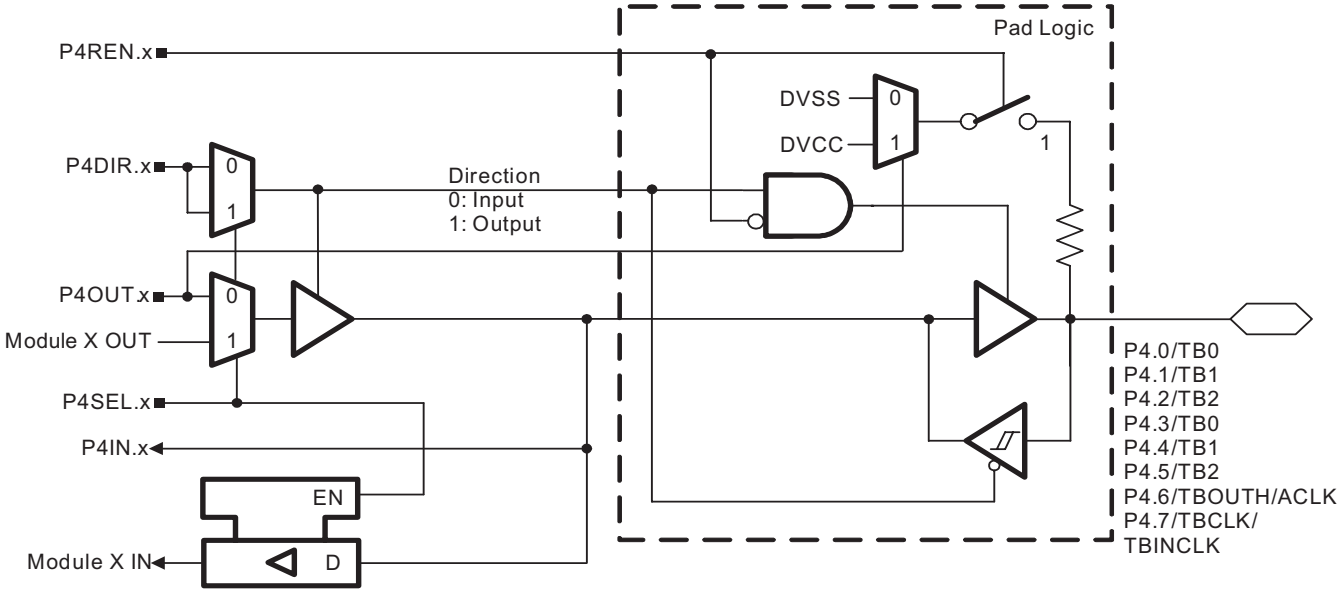

Table 25. Port P4 (P4.0 to P4.7) Pin Functions

PIN NAME (P4.x)	x	FUNCTION	CONTROL BITS / SIGNALS	
			P4DIR.x	P4SEL.x
P4.0/TB0	0	P4.0 (I/O)	I: 0, O: 1	0
		Timer_B3.CCI0A	0	1
		Timer_B3.OUT0	1	1
P4.1/TB1	1	P4.1 (I/O)	I: 0, O: 1	0
		Timer_B3.CCI1A	0	1
		Timer_B3.OUT1	1	1
P4.2/TB2	2	P4.2 (I/O)	I: 0, O: 1	0
		Timer_B3.CCI2A	0	1
		Timer_B3.OUT2	1	1
P4.3/TB0	3	P4.3 (I/O)	I: 0, O: 1	0
		Timer_B3.CCI0B	0	1
		Timer_B3.OUT0	1	1
P4.4/TB1	4	P4.4 (I/O)	I: 0, O: 1	0
		Timer_B3.CCI1B	0	1
		Timer_B3.OUT1	1	1
P4.5/TB2	5	P4.5 (I/O)	I: 0, O: 1	0
		N/A	0	1
		Timer_B3.OUT2	1	1
P4.6/TBOUTH/ACLK	6	P4.6 (I/O)	I: 0, O: 1	0
		Timer_B3.TBOUTH	0	1
		ACLK	1	1
P4.7/TBCLK	7	P4.7 (I/O)	I: 0, O: 1	0
		Timer_B3.TBCLK	0	1

Copyright © 2006–2011, Texas Instruments Incorporated

JTAG Pins TMS, TCK, TDI/TCLK, TDO/TDI, Input/Output With Schmitt Trigger

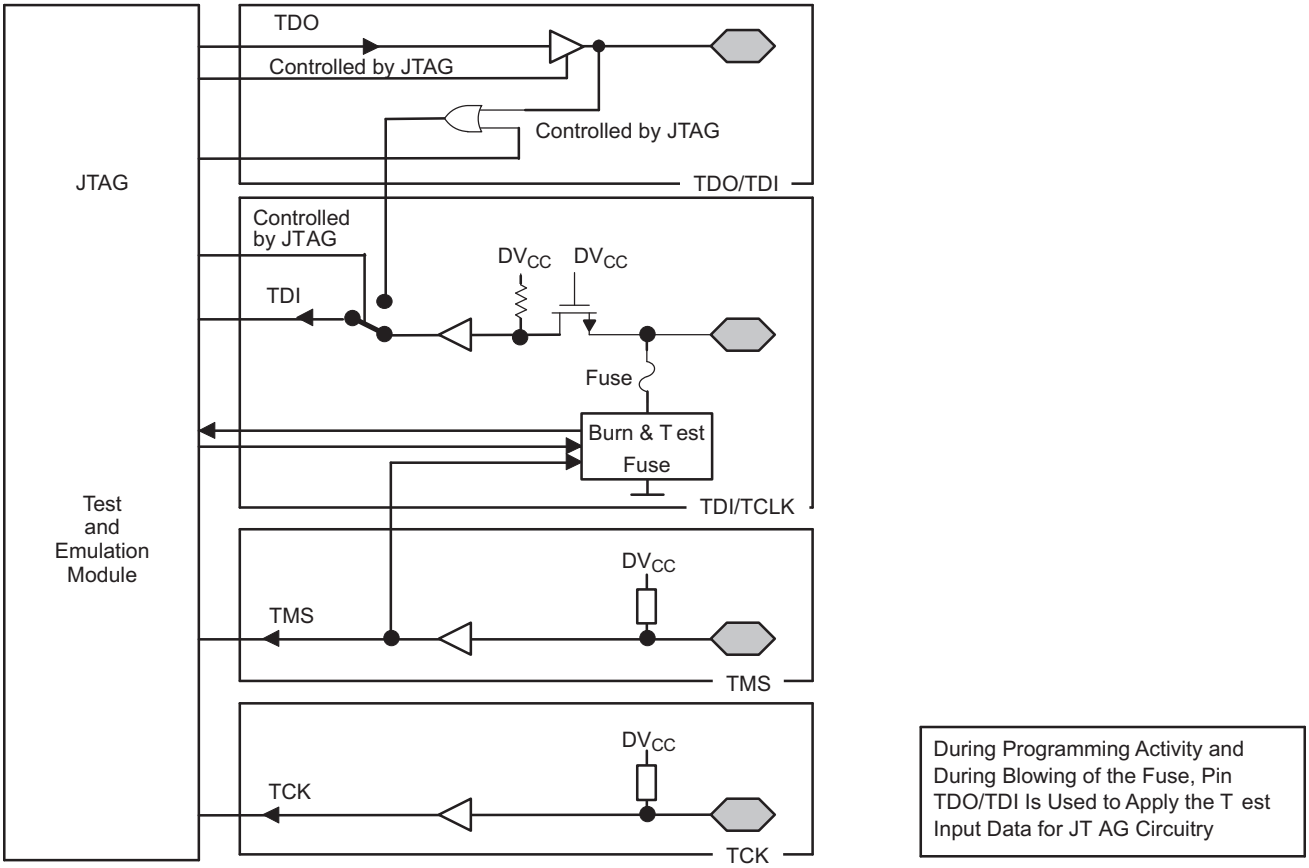

Copyright © 2006–2011, Texas Instruments Incorporated

JTAG Fuse Check Mode

MSP430 devices that have the fuse on the TEST terminal have a fuse check mode that tests the continuity of the fuse the first time the JTAG port is accessed after a power-on reset (POR). When activated, a fuse check current, I_{TF} , of 1 mA at 3 V, 2.5 mA at 5 V can flow from the TEST pin to ground if the fuse is not burned. Care must be taken to avoid accidentally activating the fuse check mode and increasing overall system power consumption.

Activation of the fuse check mode occurs with the first negative edge on the TMS pin after power up or if TMS is being held low during power up. The second positive edge on the TMS pin deactivates the fuse check mode. After deactivation, the fuse check mode remains inactive until another POR occurs. After each POR the fuse check mode has the potential to be activated.

The fuse check current flows only when the fuse check mode is active and the TMS pin is in a low state (see Figure 30). Therefore, the additional current flow can be prevented by holding the TMS pin high (default condition).

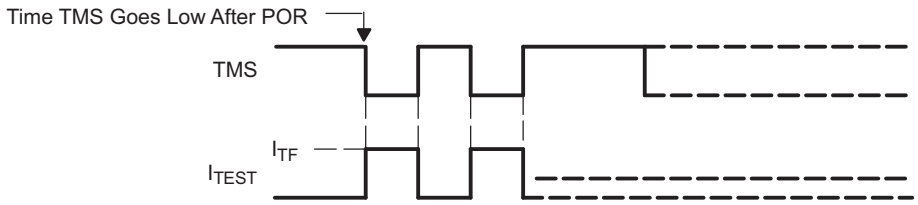

Figure 30. Fuse Check Mode Current

Copyright © 2006–2011, Texas Instruments Incorporated

REVISION HISTORY

LITERATURE NUMBER	SUMMARY
SLAS518	PRODUCT PREVIEW data sheet release
SLAS518A	PRODUCTION DATA data sheet release
SLAS518B	The USCI parameter section was revised, pages 36 to 39.
	Corrected the port schematics of port P2.6 and P2.7
	Added in the DSBGA package version.
	Corrected WDTIFG description in IFG1 register.
	Corrected labels in Figure 17 and 18.
	Corrected test conditions of Comparator_A+ from P1.0, P1.1 to P2.3 and P2.4.
	Corrected the UART parameters.
SLAS518C	Release of MSP430F2330IYFF and MSP430F2350IYFF
SLAS518D	Changed T_{stg}, Programmed device, to -40°C to 150°C in Absolute Maximum Ratings.
SLAS518E	Changed T_{stg}, Programmed device, to -55°C to 150°C in Absolute Maximum Ratings.

Copyright © 2006–2011, Texas Instruments Incorporated

PACKAGING INFORMATION

Orderable part number	Status (1)	Material type (2)	Package | Pins	Package qty | Carrier	RoHS (3)	Lead finish/ Ball material (4)	MSL rating/ Peak reflow (5)	Op temp (°C)	Part marking (6)
MSP430F2330IRHAR	Active	Production	VQFN (RHA) | 40	2500 | LARGE T&R	Yes	NIPDAU	Level-3-260C-168 HR	-40 to 85	M430 F2330
MSP430F2330IRHAR.A	Active	Production	VQFN (RHA) | 40	2500 | LARGE T&R	Yes	NIPDAU	Level-3-260C-168 HR	-40 to 85	M430 F2330
MSP430F2330IRHAT	Active	Production	VQFN (RHA) | 40	250 | SMALL T&R	Yes	NIPDAU	Level-3-260C-168 HR	-40 to 85	M430 F2330
MSP430F2330IRHAT.A	Active	Production	VQFN (RHA) | 40	250 | SMALL T&R	Yes	NIPDAU	Level-3-260C-168 HR	-40 to 85	M430 F2330
MSP430F2330TRHAR	Active	Production	VQFN (RHA) | 40	2500 | LARGE T&R	Yes	NIPDAU	Level-3-260C-168 HR	-40 to 105	M430 F2330T
MSP430F2330TRHAR.A	Active	Production	VQFN (RHA) | 40	2500 | LARGE T&R	Yes	NIPDAU	Level-3-260C-168 HR	-40 to 105	M430 F2330T
MSP430F2330TRHAT	Active	Production	VQFN (RHA) | 40	250 | SMALL T&R	Yes	NIPDAU	Level-3-260C-168 HR	-40 to 105	M430 F2330T
MSP430F2330TRHAT.A	Active	Production	VQFN (RHA) | 40	250 | SMALL T&R	Yes	NIPDAU	Level-3-260C-168 HR	-40 to 105	M430 F2330T
MSP430F2350IRHAR	Active	Production	VQFN (RHA) | 40	2500 | LARGE T&R	Yes	NIPDAU	Level-3-260C-168 HR	-40 to 85	M430 F2350
MSP430F2350IRHAR.A	Active	Production	VQFN (RHA) | 40	2500 | LARGE T&R	Yes	NIPDAU	Level-3-260C-168 HR	-40 to 85	M430 F2350
MSP430F2350IRHAT	Active	Production	VQFN (RHA) | 40	250 | SMALL T&R	Yes	NIPDAU	Level-3-260C-168 HR	-40 to 85	M430 F2350
MSP430F2350IRHAT.A	Active	Production	VQFN (RHA) | 40	250 | SMALL T&R	Yes	NIPDAU	Level-3-260C-168 HR	-40 to 85	M430 F2350
MSP430F2350TRHAR	Active	Production	VQFN (RHA) | 40	2500 | LARGE T&R	Yes	NIPDAU	Level-3-260C-168 HR	-40 to 105	M430 F2350T
MSP430F2350TRHAR.A	Active	Production	VQFN (RHA) | 40	2500 | LARGE T&R	Yes	NIPDAU	Level-3-260C-168 HR	-40 to 105	M430 F2350T
MSP430F2350TRHAT	Active	Production	VQFN (RHA) | 40	250 | SMALL T&R	Yes	NIPDAU	Level-3-260C-168 HR	-40 to 105	M430 F2350T
MSP430F2350TRHAT.A	Active	Production	VQFN (RHA) | 40	250 | SMALL T&R	Yes	NIPDAU	Level-3-260C-168 HR	-40 to 105	M430 F2350T

Orderable part number	Status (1)	Material type (2)	Package | Pins	Package qty | Carrier	RoHS (3)	Lead finish/ Ball material (4)	MSL rating/ Peak reflow (5)	Op temp (°C)	Part marking (6)
MSP430F2370IRHAR	Active	Production	VQFN (RHA) | 40	2500 | LARGE T&R	Yes	NIPDAU	Level-3-260C-168 HR	-40 to 85	M430 F2370
MSP430F2370IRHAR.A	Active	Production	VQFN (RHA) | 40	2500 | LARGE T&R	Yes	NIPDAU	Level-3-260C-168 HR	-40 to 85	M430 F2370
MSP430F2370IRHARG4	Active	Production	VQFN (RHA) | 40	2500 | LARGE T&R	Yes	NIPDAU	Level-3-260C-168 HR	-40 to 105	M430 F2370
MSP430F2370IRHARG4.A	Active	Production	VQFN (RHA) | 40	2500 | LARGE T&R	Yes	NIPDAU	Level-3-260C-168 HR	-40 to 105	M430 F2370
MSP430F2370IRHAT	Active	Production	VQFN (RHA) | 40	250 | SMALL T&R	Yes	NIPDAU	Level-3-260C-168 HR	-40 to 85	M430 F2370
MSP430F2370IRHAT.A	Active	Production	VQFN (RHA) | 40	250 | SMALL T&R	Yes	NIPDAU	Level-3-260C-168 HR	-40 to 85	M430 F2370
MSP430F2370TRHAR	Active	Production	VQFN (RHA) | 40	2500 | LARGE T&R	Yes	NIPDAU	Level-3-260C-168 HR	-40 to 105	M430 F2370T
MSP430F2370TRHAR.A	Active	Production	VQFN (RHA) | 40	2500 | LARGE T&R	Yes	NIPDAU	Level-3-260C-168 HR	-40 to 105	M430 F2370T
MSP430F2370TRHAT	Active	Production	VQFN (RHA) | 40	250 | SMALL T&R	Yes	NIPDAU	Level-3-260C-168 HR	-40 to 105	M430 F2370T
MSP430F2370TRHAT.A	Active	Production	VQFN (RHA) | 40	250 | SMALL T&R	Yes	NIPDAU	Level-3-260C-168 HR	-40 to 105	M430 F2370T

(1) **Status:** For more details on status, see our product life cycle.

(2) **Material type:** When designated, preproduction parts are prototypes/experimental devices, and are not yet approved or released for full production. Testing and final process, including without limitation quality assurance, reliability performance testing, and/or process qualification, may not yet be complete, and this item is subject to further changes or possible discontinuation. If available for ordering, purchases will be subject to an additional waiver at checkout, and are intended for early internal evaluation purposes only. These items are sold without warranties of any kind.

(3) **RoHS values:** Yes, No, RoHS Exempt. See the TI RoHS Statement for additional information and value definition.

(4) **Lead finish/Ball material:** Parts may have multiple material finish options. Finish options are separated by a vertical ruled line. Lead finish/Ball material values may wrap to two lines if the finish value exceeds the maximum column width.

(5) **MSL rating/Peak reflow:** The moisture sensitivity level ratings and peak solder (reflow) temperatures. In the event that a part has multiple moisture sensitivity ratings, only the lowest level per JEDEC standards is shown. Refer to the shipping label for the actual reflow temperature that will be used to mount the part to the printed circuit board.

(6) **Part marking:** There may be an additional marking, which relates to the logo, the lot trace code information, or the environmental category of the part.

Multiple part markings will be inside parentheses. Only one part marking contained in parentheses and separated by a "~" will appear on a part. If a line is indented then it is a continuation of the previous line and the two combined represent the entire part marking for that device.

Important Information and Disclaimer: The information provided on this page represents TI's knowledge and belief as of the date that it is provided. TI bases its knowledge and belief on information provided by third parties, and makes no representation or warranty as to the accuracy of such information. Efforts are underway to better integrate information from third parties. TI has taken and continues to take reasonable steps to provide representative and accurate information but may not have conducted destructive testing or chemical analysis on incoming materials and chemicals. TI and TI suppliers consider certain information to be proprietary, and thus CAS numbers and other limited information may not be available for release.

In no event shall TI's liability arising out of such information exceed the total purchase price of the TI part(s) at issue in this document sold by TI to Customer on an annual basis.

TAPE AND REEL INFORMATION

REEL DIMENSIONS

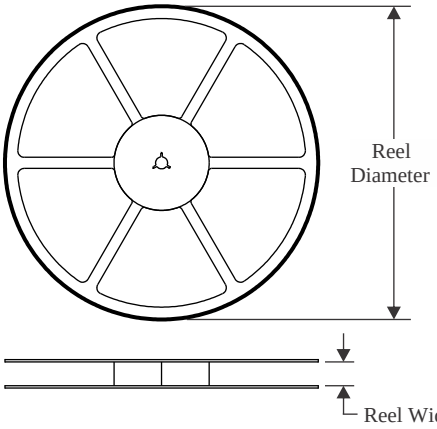

TAPE DIMENSIONS

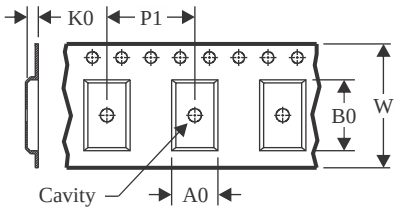

A0	Dimension designed to accommodate the component width
B0	Dimension designed to accommodate the component length
K0	Dimension designed to accommodate the component thickness
W	Overall width of the carrier tape
P1	Pitch between successive cavity centers

QUADRANT ASSIGNMENTS FOR PIN 1 ORIENTATION IN TAPE

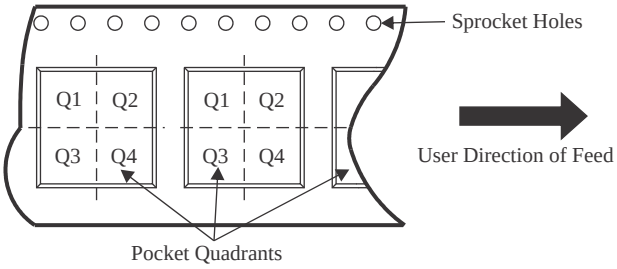

*All dimensions are nominal

Device	Package Type	Package Drawing	Pins	SPQ	Reel Diameter (mm)	Reel Width W1 (mm)	A0 (mm)	B0 (mm)	K0 (mm)	P1 (mm)	W (mm)	Pin1 Quadrant
MSP430F2330IRHAR	VQFN	RHA	40	2500	330.0	16.4	6.3	6.3	1.1	12.0	16.0	Q2
MSP430F2330IRHAR	VQFN	RHA	40	2500	330.0	16.4	6.3	6.3	1.1	12.0	16.0	Q2
MSP430F2330IRHAT	VQFN	RHA	40	250	180.0	16.4	6.3	6.3	1.1	12.0	16.0	Q2
MSP430F2330IRHAT	VQFN	RHA	40	250	180.0	16.4	6.3	6.3	1.1	12.0	16.0	Q2
MSP430F2330TRHAR	VQFN	RHA	40	2500	330.0	16.4	6.3	6.3	1.1	12.0	16.0	Q2
MSP430F2330TRHAR	VQFN	RHA	40	2500	330.0	16.4	6.3	6.3	1.1	12.0	16.0	Q2
MSP430F2330TRHAT	VQFN	RHA	40	250	180.0	16.4	6.3	6.3	1.1	12.0	16.0	Q2
MSP430F2330TRHAT	VQFN	RHA	40	250	180.0	16.4	6.3	6.3	1.1	12.0	16.0	Q2
MSP430F2350IRHAR	VQFN	RHA	40	2500	330.0	16.4	6.3	6.3	1.1	12.0	16.0	Q2
MSP430F2350IRHAR	VQFN	RHA	40	2500	330.0	16.4	6.3	6.3	1.1	12.0	16.0	Q2
MSP430F2350IRHAT	VQFN	RHA	40	250	180.0	16.4	6.3	6.3	1.1	12.0	16.0	Q2
MSP430F2350IRHAT	VQFN	RHA	40	250	180.0	16.4	6.3	6.3	1.1	12.0	16.0	Q2
MSP430F2350TRHAR	VQFN	RHA	40	2500	330.0	16.4	6.3	6.3	1.1	12.0	16.0	Q2
MSP430F2350TRHAR	VQFN	RHA	40	2500	330.0	16.4	6.3	6.3	1.1	12.0	16.0	Q2
MSP430F2350TRHAT	VQFN	RHA	40	250	180.0	16.4	6.3	6.3	1.1	12.0	16.0	Q2
MSP430F2350TRHAT	VQFN	RHA	40	250	180.0	16.4	6.3	6.3	1.1	12.0	16.0	Q2

Device	Package Type	Package Drawing	Pins	SPQ	Reel Diameter (mm)	Reel Width W1 (mm)	A0 (mm)	B0 (mm)	K0 (mm)	P1 (mm)	W (mm)	Pin1 Quadrant
MSP430F2370IRHAR	VQFN	RHA	40	2500	330.0	16.4	6.3	6.3	1.1	12.0	16.0	Q2
MSP430F2370IRHAR	VQFN	RHA	40	2500	330.0	16.4	6.3	6.3	1.1	12.0	16.0	Q2
MSP430F2370IRHARG4	VQFN	RHA	40	2500	330.0	16.4	6.3	6.3	1.1	12.0	16.0	Q2
MSP430F2370IRHAT	VQFN	RHA	40	250	180.0	16.4	6.3	6.3	1.1	12.0	16.0	Q2
MSP430F2370IRHAT	VQFN	RHA	40	250	180.0	16.4	6.3	6.3	1.1	12.0	16.0	Q2
MSP430F2370TRHAR	VQFN	RHA	40	2500	330.0	16.4	6.3	6.3	1.1	12.0	16.0	Q2
MSP430F2370TRHAR	VQFN	RHA	40	2500	330.0	16.4	6.3	6.3	1.1	12.0	16.0	Q2
MSP430F2370TRHAT	VQFN	RHA	40	250	180.0	16.4	6.3	6.3	1.1	12.0	16.0	Q2
MSP430F2370TRHAT	VQFN	RHA	40	250	180.0	16.4	6.3	6.3	1.1	12.0	16.0	Q2

TAPE AND REEL BOX DIMENSIONS

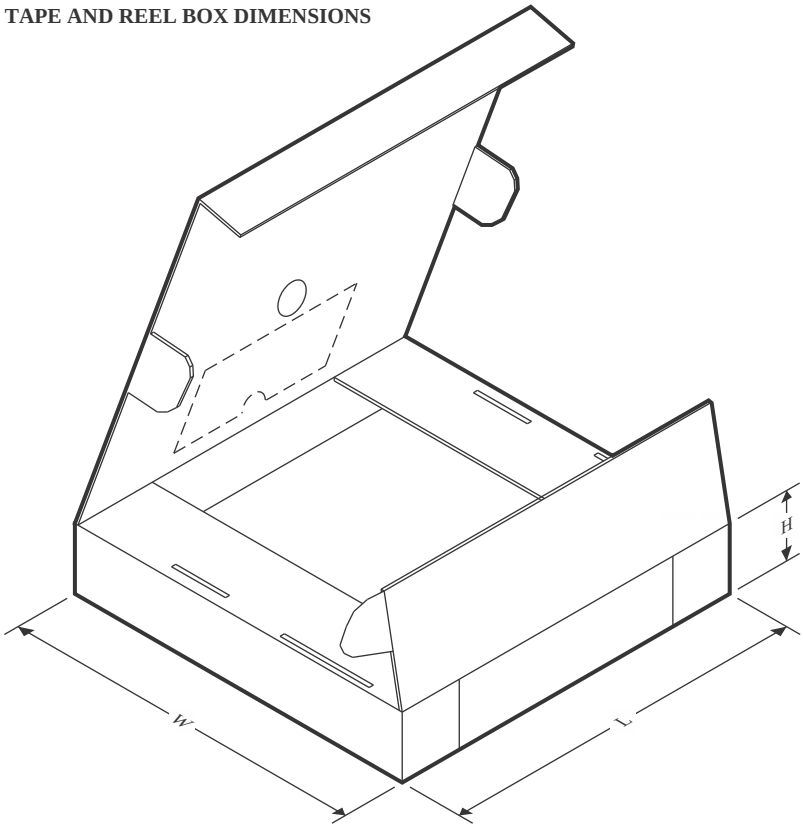

*All dimensions are nominal

Device	Package Type	Package Drawing	Pins	SPQ	Length (mm)	Width (mm)	Height (mm)
MSP430F2330IRHAR	VQFN	RHA	40	2500	360.0	360.0	36.0
MSP430F2330IRHAR	VQFN	RHA	40	2500	353.0	353.0	32.0
MSP430F2330IRHAT	VQFN	RHA	40	250	210.0	185.0	35.0
MSP430F2330IRHAT	VQFN	RHA	40	250	213.0	191.0	35.0
MSP430F2330TRHAR	VQFN	RHA	40	2500	353.0	353.0	32.0
MSP430F2330TRHAR	VQFN	RHA	40	2500	360.0	360.0	36.0
MSP430F2330TRHAT	VQFN	RHA	40	250	210.0	185.0	35.0
MSP430F2330TRHAT	VQFN	RHA	40	250	213.0	191.0	35.0
MSP430F2350IRHAR	VQFN	RHA	40	2500	353.0	353.0	32.0
MSP430F2350IRHAR	VQFN	RHA	40	2500	360.0	360.0	36.0
MSP430F2350IRHAT	VQFN	RHA	40	250	210.0	185.0	35.0
MSP430F2350IRHAT	VQFN	RHA	40	250	213.0	191.0	35.0
MSP430F2350TRHAR	VQFN	RHA	40	2500	360.0	360.0	36.0
MSP430F2350TRHAR	VQFN	RHA	40	2500	353.0	353.0	32.0
MSP430F2350TRHAT	VQFN	RHA	40	250	210.0	185.0	35.0
MSP430F2350TRHAT	VQFN	RHA	40	250	213.0	191.0	35.0
MSP430F2370IRHAR	VQFN	RHA	40	2500	353.0	353.0	32.0
MSP430F2370IRHAR	VQFN	RHA	40	2500	360.0	360.0	36.0

Device	Package Type	Package Drawing	Pins	SPQ	Length (mm)	Width (mm)	Height (mm)
MSP430F2370IRHARG4	VQFN	RHA	40	2500	367.0	367.0	35.0
MSP430F2370IRHAT	VQFN	RHA	40	250	210.0	185.0	35.0
MSP430F2370IRHAT	VQFN	RHA	40	250	213.0	191.0	35.0
MSP430F2370TRHAR	VQFN	RHA	40	2500	360.0	360.0	36.0
MSP430F2370TRHAR	VQFN	RHA	40	2500	353.0	353.0	32.0
MSP430F2370TRHAT	VQFN	RHA	40	250	210.0	185.0	35.0
MSP430F2370TRHAT	VQFN	RHA	40	250	213.0	191.0	35.0

GENERIC PACKAGE VIEW

RHA 40

VQFN - 1 mm max height

6 x 6, 0.5 mm pitch

PLASTIC QUAD FLATPACK - NO LEAD

This image is a representation of the package family, actual package may vary.
Refer to the product data sheet for package details.

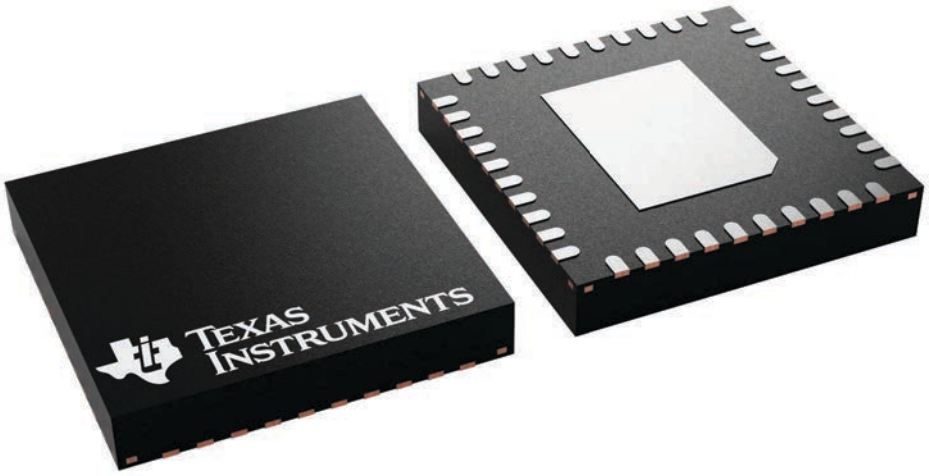

4225870/A

PACKAGE OUTLINE

RHA0040B

VQFN - 1 mm max height

PLASTIC QUAD FLATPACK - NO LEAD

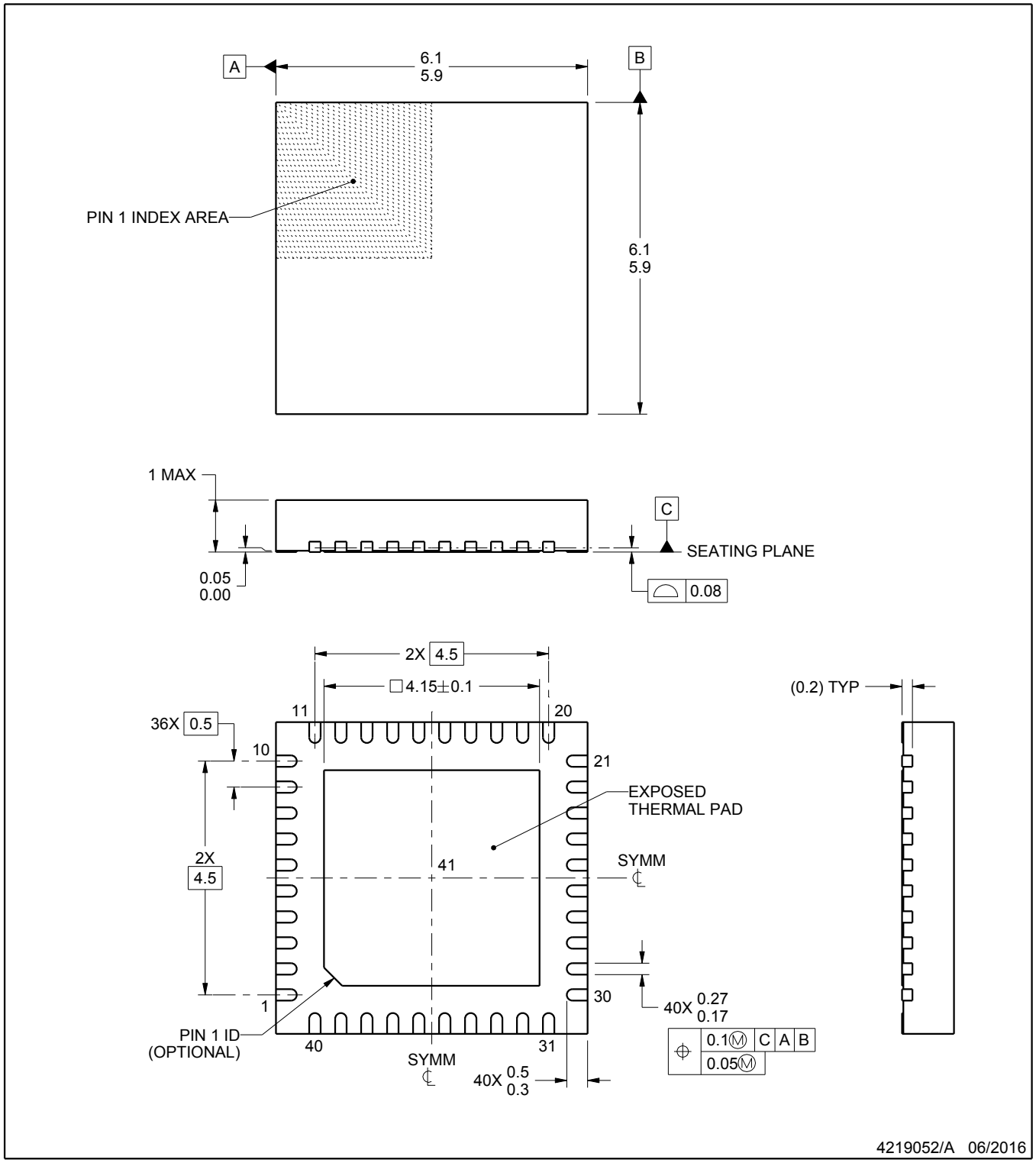

NOTES:

1. All linear dimensions are in millimeters. Any dimensions in parenthesis are for reference only. Dimensioning and tolerancing per ASME Y14.5M.
2. This drawing is subject to change without notice.
3. The package thermal pad must be soldered to the printed circuit board for thermal and mechanical performance.

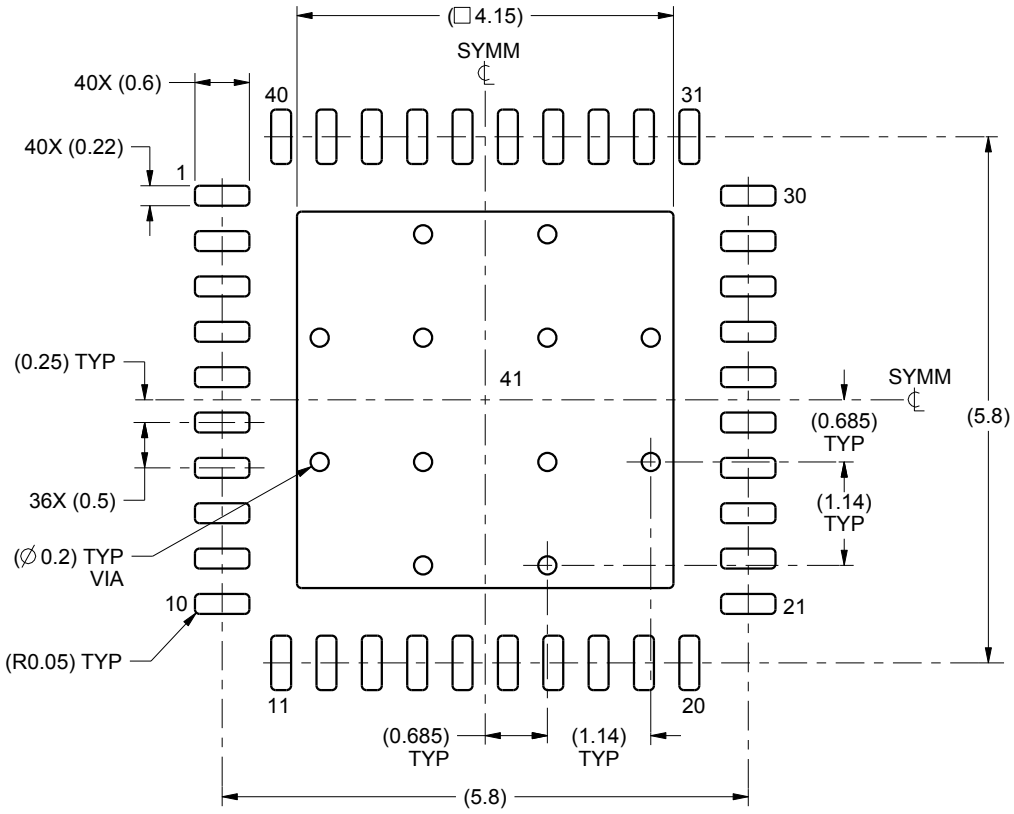

LAND PATTERN EXAMPLE
SCALE:12X

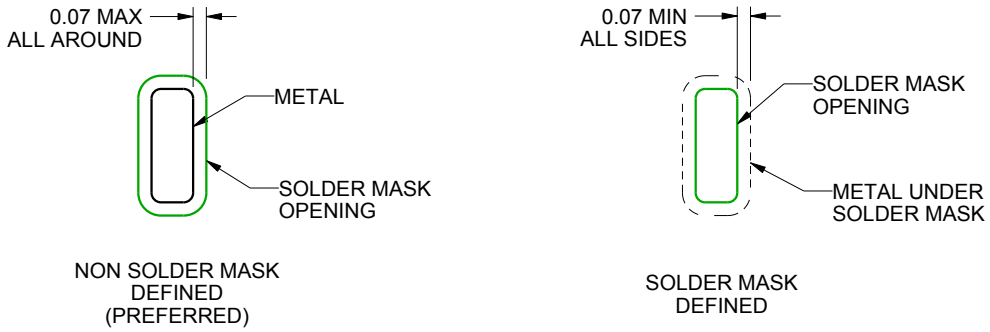

SOLDER MASK DETAILS

4219052/A 06/2016

NOTES: (continued)

4. This package is designed to be soldered to a thermal pad on the board. For more information, see Texas Instruments literature number SLUA271 (www.ti.com/lit/slua271).

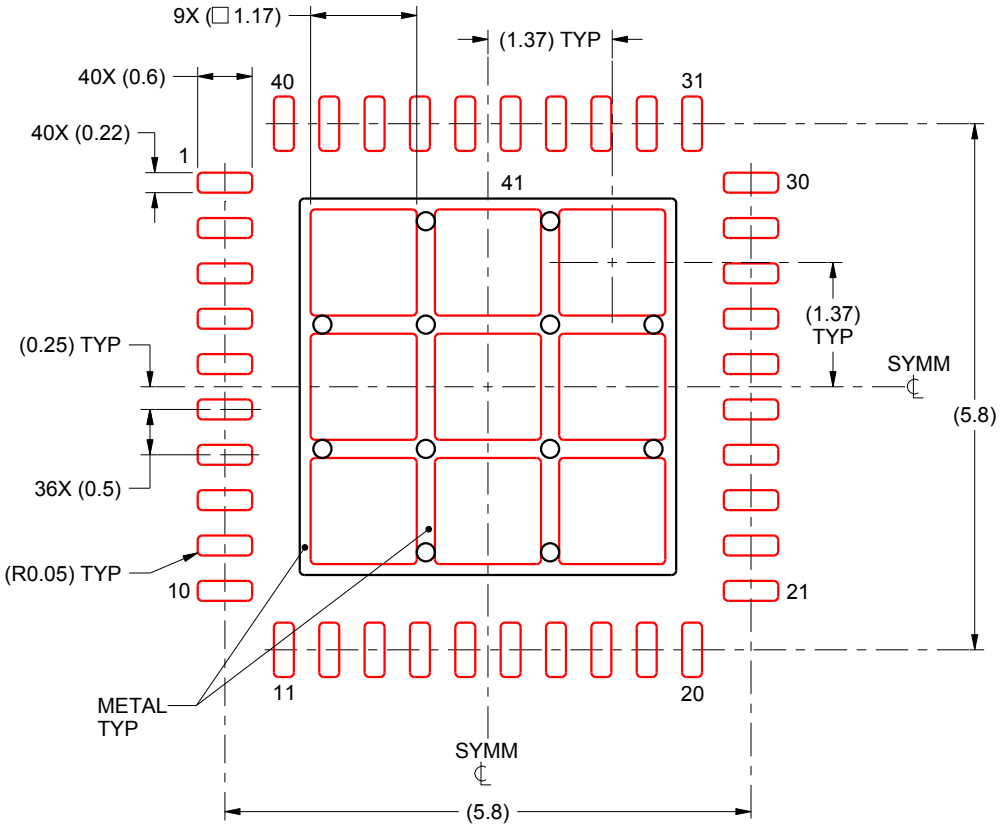

SOLDER PASTE EXAMPLE
BASED ON 0.125 mm THICK STENCIL

EXPOSED PAD 41:
72% PRINTED SOLDER COVERAGE BY AREA UNDER PACKAGE
SCALE:12X

4219052/A 06/2016

NOTES: (continued)

5. Laser cutting apertures with trapezoidal walls and rounded corners may offer better paste release. IPC-7525 may have alternate design recommendations.

IMPORTANT NOTICE AND DISCLAIMER

TI PROVIDES TECHNICAL AND RELIABILITY DATA (INCLUDING DATASHEETS), DESIGN RESOURCES (INCLUDING REFERENCE DESIGNS), APPLICATION OR OTHER DESIGN ADVICE, WEB TOOLS, SAFETY INFORMATION, AND OTHER RESOURCES “AS IS” AND WITH ALL FAULTS, AND DISCLAIMS ALL WARRANTIES, EXPRESS AND IMPLIED, INCLUDING WITHOUT LIMITATION ANY IMPLIED WARRANTIES OF MERCHANTABILITY, FITNESS FOR A PARTICULAR PURPOSE OR NON-INFRINGEMENT OF THIRD PARTY INTELLECTUAL PROPERTY RIGHTS.

These resources are intended for skilled developers designing with TI products. You are solely responsible for (1) selecting the appropriate TI products for your application, (2) designing, validating and testing your application, and (3) ensuring your application meets applicable standards, and any other safety, security, regulatory or other requirements.

These resources are subject to change without notice. TI grants you permission to use these resources only for development of an application that uses the TI products described in the resource. Other reproduction and display of these resources is prohibited. No license is granted to any other TI intellectual property right or to any third party intellectual property right. TI disclaims responsibility for, and you fully indemnify TI and its representatives against any claims, damages, costs, losses, and liabilities arising out of your use of these resources.

TI’s products are provided subject to TI’s Terms of Sale, TI’s General Quality Guidelines, or other applicable terms available either on ti.com or provided in conjunction with such TI products. TI’s provision of these resources does not expand or otherwise alter TI’s applicable warranties or warranty disclaimers for TI products. Unless TI explicitly designates a product as custom or customer-specified, TI products are standard, catalog, general purpose devices.

TI objects to and rejects any additional or different terms you may propose.

Copyright © 2026, Texas Instruments Incorporated

Last updated 10/2025