OPAx357 250-MHz, Rail-to-Rail I/O, CMOS Operational Amplifier With Shutdown

1 Features

- Unity-Gain Bandwidth: 250 MHz
- Wide Bandwidth: 100-MHz GBW
- High Slew Rate: 150 V/µs
- Low Noise: 6.5 nV/√Hz
- Rail-to-Rail I/O
- High Output Current: > 100 mA
- Excellent Video Performance:
  - Differential Gain: 0.02%, Differential Phase: 0.09°
  - 0.1-dB Gain Flatness: 40 MHz
- Low Input Bias Current: 3 pA
- Quiescent Current: 4.9 mA
- Thermal Shutdown
- Supply Range: 2.5 V to 5.5 V
- Shutdown I_Q < 6 µA
- *Micro*SIZE Package
- Create a Custom Design Using the OPA357 With the WEBENCH® Power Designer

2 Applications

- Video Processing
- Ultrasound
- Optical Networking, Tunable Lasers
- Photodiode Transimpedance Amplifiers
- Active Filters
- High-Speed Integrators
- Analog-to-Digital (A/D) Converter Input Buffers
- Digital-to-Analog (D/A) Converter Output Amplifiers
- Barcode Scanners
- Communications

3 Description

The OPA357 series of high-speed, voltage-feedback CMOS operational amplifiers is designed for video and other applications requiring wide bandwidth. These devices are unity-gain stable and can drive large output currents. Differential gain is 0.02% and differential phase is 0.09°. Quiescent current is only 4.9 mA per channel.

The OPA357 series of op amps is optimized for operation on single or dual supplies as low as 2.5 V (±1.25 V) and up to 5.5 V (±2.75 V). Common-mode input range extends beyond the supplies. The output swing is within 100 mV of the rails, supporting wide dynamic range.

The single version (OPA357) comes in the miniature SOT23-6 package. The dual version (OPA2357) is offered in the VSSOP-10 package.

The dual version features completely independent circuitry for lowest crosstalk and freedom from interaction. Both versions are specified over the extended –40°C to +125°C temperature range.

Device Information(1)

PART NUMBER	PACKAGE	BODY SIZE (NOM)
OPA357	SOT23 (6)	2.90 mm × 1.60 mm
OPA2357	VSSOP (10)	3.00 mm × 3.00 mm

(1) For all available packages, see the orderable addendum at the end of the data sheet.

Simplified Schematic

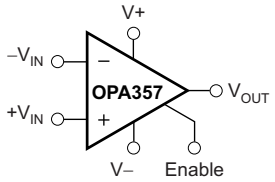

An IMPORTANT NOTICE at the end of this data sheet addresses availability, warranty, changes, use in safety-critical applications, intellectual property matters and other important disclaimers. PRODUCTION DATA.

Table of Contents

1 Features ... 1
2 Applications ... 1
3 Description ... 1
4 Revision History ... 2
5 Pin Configuration and Functions ... 3
6 Specifications ... 4
6.1 Absolute Maximum Ratings ... 4
6.2 ESD Ratings ... 4
6.3 Recommended Operating Conditions ... 4
6.4 Thermal Information ... 4
6.5 Electrical Characteristics: V_S = +2.7-V to +5.5-V Single-Supply ... 5
6.6 Typical Characteristics ... 7
7 Detailed Description ... 13
7.1 Overview ... 13
7.2 Functional Block Diagram ... 13
7.3 Feature Description ... 14
7.4 Device Functional Modes ... 19
8 Application and Implementation ... 20
8.1 Application Information ... 20
8.2 Typical Applications ... 20
9 Power Supply Recommendations ... 26
9.1 Power Dissipation ... 26
10 Layout ... 26
10.1 Layout Guidelines ... 26
10.2 Layout Example ... 26
11 Device and Documentation Support ... 27
11.1 Device Support ... 27
11.2 Documentation Support ... 27
11.3 Related Links ... 27
11.4 Receiving Notification of Documentation Updates 27
11.5 Community Resources ... 28
11.6 Trademarks ... 28
11.7 Electrostatic Discharge Caution ... 28
11.8 Glossary ... 28
12 Mechanical, Packaging, and Orderable Information ... 28

4 Revision History

NOTE: Page numbers for previous revisions may differ from page numbers in the current version.

Changes from Revision E (May 2009) to Revision F **Page**

- Added *Device Information* table, *Pin Functions* table, *ESD Ratings* table, *Recommended Operating Conditions* table, *Thermal Information* table, *Overview* section, *Functional Block Diagram* section, *Feature Description* section, *Device Functional Modes* section, *Application and Implementation* section, *Power Supply Recommendations* section, *Layout* section, *Device and Documentation Support* section, and *Mechanical, Packaging, and Orderable Information* section ... 1
- Changed *MSOP* to *VSSOP* throughout document ... 1
- Deleted DDA package (SO-8 PowerPAD) from document ... 1
- Changed *MSOP* to *VSSOP* throughout document ... 1
- Added WEBENCH *Features* bullet ... 1
- Deleted OADI from DBV pin drawing ... 3
- Deleted *Package/Ordering Information* table ... 4
- Deleted footnote from *Signal input pins* parameter in *Absolute Maximum Ratings* table ... 4
- Changed *Temperature Range* section of *Electrical Characteristics* table: changed θ_{JA} to $R_{\theta JA}$ and deleted *Specified range*, *Operating range*, and *Storage range* parameters ... 6
- Added *OPAx357 Comparison* section and moved *OPAx357 Related Products* table to this section from page 1 ... 14
- Deleted first paragraph of *Power Dissipation* section ... 26
- Changed *PCB Layout* title to *Layout Guidelines* ... 26
- Deleted *PowerPAD Thermall Enhanced Package* and *PowerPAD Assembly Process* sections ... 26
- Added *Custom Design With WEBENCH® Tools* section ... 27

Copyright © 2002–2018, Texas Instruments Incorporated

5 Pin Configuration and Functions

OPA357: DBV Package
6-Pin SOT-23
Top View

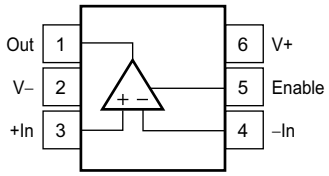

OPA2357: DGS Package
10-Pin VSSOP
Top View

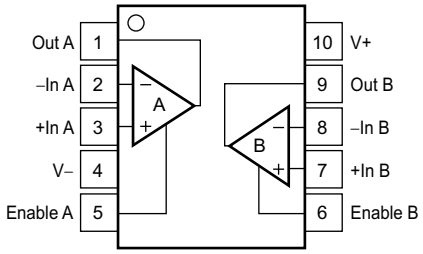

(1) Pin 1 of the SOT23-6 is determined by orienting the package marking as indicated in the diagram.

Pin Functions

PIN			I/O	DESCRIPTION
NAME	DBV (SOT-23)	DGS (VSSOP)		
Enable	5	—	—	Amplifier power down. Low = disabled, high = normal operation (pin must be driven).
Enable A	—	5	—	Amplifier power down, channel A. Low = disabled, high = normal operation (pin must be driven).
Enable B	—	6	—	Amplifier power down, channel B. Low = disabled, high = normal operation (pin must be driven).
–In	4	—	I	Inverting input pin
–In A	—	2	I	Inverting input pin, channel A
–In B	—	8	I	Inverting input pin, channel B
+In	3	—	I	Noninverting input pin
+In A	—	3	I	Noninverting input pin, channel A
+In B	—	7	I	Noninverting input pin, channel B
Out	1	—	O	Output pin
Out A	—	1	O	Output pin, channel A
Out B	—	9	O	Output pin, channel B
V–	2	4	—	Negative power supply
V+	6	10	—	Positive power supply

Copyright © 2002–2018, Texas Instruments Incorporated

6 Specifications

6.1 Absolute Maximum Ratings[1]

		MIN	MAX	UNIT
Supply voltage, V+ to V−			7.5	V
Signal input pins	Voltage	(V–) – 0.5	(V+) + 0.5	V
	Current		10	mA
Enable input		(V–) – 0.5	(V+) + 0.5	V
Output short-circuit[2]		Continuous		
Operating temperature		–55	150	°C
Junction temperature			150	°C
Storage temperature, T_{stg}		–65	150	°C

(1) Stresses beyond those listed under *Absolute Maximum Ratings* may cause permanent damage to the device. These are stress ratings only, which do not imply functional operation of the device at these or any other conditions beyond those indicated under *Recommended Operating Conditions*. Exposure to absolute-maximum-rated conditions for extended periods may affect device reliability.
(2) Short-circuit to ground, one amplifier per package.

6.2 ESD Ratings

			VALUE	UNIT
$V_{(ESD)}$	Electrostatic discharge	Human-body model (HBM), per ANSI/ESDA/JEDEC JS-001[1]	±2000	V
		Charged-device model (CDM), per JEDEC specification JESD22-C101[2]	±250	

(1) JEDEC document JEP155 states that 500-V HBM allows safe manufacturing with a standard ESD control process.
(2) JEDEC document JEP157 states that 250-V CDM allows safe manufacturing with a standard ESD control process.

6.3 Recommended Operating Conditions

over operating free-air temperature range (unless otherwise noted)

		MIN	NOM	MAX	UNIT
V_S	Total supply voltage			5.5	V
T_A	Ambient temperature	–40	25	125	°C

6.4 Thermal Information

THERMAL METRIC[1]		OPA357 DBV (SOT-23) 6 PINS	OPA2357 DGS (VSSOP) 10 PINS	UNIT
$R_{\theta JA}$	Junction-to-ambient thermal resistance	166.4	171.3	°C/W
$R_{\theta JC(top)}$	Junction-to-case (top) thermal resistance	104.6	58.2	°C/W
$R_{\theta JB}$	Junction-to-board thermal resistance	38.9	93.1	°C/W
ψ_{JT}	Junction-to-top characterization parameter	23.6	6.8	°C/W
ψ_{JB}	Junction-to-board characterization parameter	38.7	91.4	°C/W
$R_{\theta JC(bot)}$	Junction-to-case (bottom) thermal resistance	—	—	°C/W

(1) For more information about traditional and new thermal metrics, see the *Semiconductor and IC Package Thermal Metrics* application report.

Copyright © 2002–2018, Texas Instruments Incorporated

6.5 Electrical Characteristics: V_S = +2.7-V to +5.5-V Single-Supply

at T_A = 25°C, R_F = 0 Ω, R_L = 1 kΩ, and connected to V_S / 2 (unless otherwise noted)

PARAMETER		TEST CONDITIONS	MIN	TYP	MAX	UNIT
OFFSET VOLTAGE						
V_{OS}	Input offset voltage	V_S = +5 V		±2	±8	mV
		Specified temperature range, T_A = –40°C to +125°C			±10	
dV_{OS}/dT	V_{OS} vs temperature	Specified temperature range, T_A = –40°C to +125°C		±4		µV/°C
PSRR	Power-supply rejection ratio	V_S = +2.7 V to +5.5 V, V_{CM} = (V_S / 2) – 0.55 V		±200	±800	µV/V
		Specified temperature range, T_A = –40°C to +125°C			±900	
INPUT BIAS CURRENT						
I_B	Input bias current			3	±50	pA
I_{OS}	Input offset current			±1	±50	pA
NOISE						
e_n	Input voltage noise density	f = 1 MHz		6.5		nV/√Hz
i_n	Current noise density	f = 1 MHz		50		fA/√Hz
INPUT VOLTAGE RANGE						
V_{CM}	Common-mode voltage range		(V–) – 0.1		(V+) + 0.1	V
CMRR	Common-mode rejection ratio	V_S = +5.5 V, –0.1 V < V_{CM} < +3.5 V	66	80		dB
		Specified temperature range, T_A = –40°C to +125°C	64			
		V_S = +5.5 V, –0.1 V < V_{CM} < +5.6 V	56	68		
		Specified temperature range, T_A = –40°C to +125°C	55			
INPUT IMPEDANCE						
	Differential			10^{13} || 2		Ω || pF
	Common-mode			10^{13} || 2		Ω || pF
OPEN-LOOP GAIN						
A_{OL}	Open-loop gain	V_S = +5 V, +0.3 V < V_O < +4.7 V	94	110		dB
		Specified temperature range, T_A = –40°C to +125°C, V_S = +5 V, +0.4 V < V_O < +4.6 V	90			
FREQUENCY RESPONSE						
$f_{–3dB}$	Small-signal bandwidth	G = +1, V_O = 100 mV_{PP}, R_F = 25 Ω		250		MHz
		G = +2, V_O = 100 mV_{PP}		90		
GBP	Gain-bandwidth product	G = +10		100		MHz
$f_{0.1dB}$	Bandwidth for 0.1-dB gain flatness	G = +2, V_O = 100 mV_{PP}		40		MHz
SR	Slew rate	V_S = +5 V, G = +1, 4-V step		150		V/µs
		V_S = +5 V, G = +1, 2-V step		130		
		V_S = +3 V, G = +1, 2-V step		110		
	Rise-and-fall time	G = +1, V_O = 100 mV_{PP}, 10% to 90%		2		ns
		G = +1, V_O = 2 V_{PP}, 10% to 90%		11		
	Settling time, 0.1%	V_S = +5 V, G = +1, 2-V output step		30		ns
	Settling time, 0.01%			60		ns
	Overload recovery time	V_{IN} × gain = V_S		5		ns
HD2	2nd-order harmonic distortion	G = +1, f = 1 MHz, V_O = 2 V_{PP}, R_L = 200 Ω, V_{CM} = 1.5 V		–75		dBc
HD3	3rd-order harmonic distortion	G = +1, f = 1 MHz, V_O = 2 V_{PP}, R_L = 200 Ω, V_{CM} = 1.5 V		–83		dBc

Copyright © 2002–2018, Texas Instruments Incorporated

Electrical Characteristics: V_S = +2.7-V to +5.5-V Single-Supply (continued)

at T_A = 25°C, R_F = 0 Ω, R_L = 1 kΩ, and connected to V_S / 2 (unless otherwise noted)

PARAMETER		TEST CONDITIONS	MIN	TYP	MAX	UNIT
FREQUENCY RESPONSE (continued)						
	Differential gain error	NTSC, R_L = 150 Ω		0.02%		
	Differential phase error	NTSC, R_L = 150 Ω		0.09		Degrees
	Channel-to-channel crosstalk, OPA2357	f = 5 MHz		–100		dB
OUTPUT						
	Voltage output swing from rail	V_S = +5 V, R_L = 1 kΩ, A_{OL} > 94 dB		0.1	0.3	V
		Specified temperature range, T_A = –40°C to +125°C, V_S = +5 V, R_L = 1 kΩ, A_{OL} > 90 dB			0.4	
I_O	Output current (1) (2)	V_S = +5 V, single	100			mA
		V_S = +3 V, dual		50		
	Closed-loop output impedance			0.05		Ω
R_O	Open-loop output resistance			35		Ω
POWER SUPPLY						
V_S	Specified voltage range		2.7		5.5	V
	Operating voltage range			2.5 to 5.5		V
I_Q	Quiescent current (per amplifier)	V_S = +5 V, enabled, I_O = 0 V		4.9	6	mA
		Specified temperature range, T_A = –40°C to +125°C			7.5	
ENABLE, SHUTDOWN FUNCTION						
	Disabled (logic−low threshold)				0.8	V
	Enabled (logic−high threshold)		2			V
	Logic input current	Logic low		200		nA
	Turn-on time			100		ns
	Turn-off time			30		ns
	Off isolation	G = +1, 5 MHz, R_L = 10 Ω		74		dB
	Quiescent current (per amplifier)			3.4	6	µA
THERMAL SHUTDOWN						
T_J	Junction temperature	Shutdown		160		°C
		Reset from shutdown		140		
TEMPERATURE RANGE						
$R_{\theta JA}$	Thermal resistance	SOT23-6		150		°C/W
		VSSOP-10		150		

(1) See Figure 21 and Figure 23.
(2) Specified by design.

Copyright © 2002–2018, Texas Instruments Incorporated

6.6 Typical Characteristics

at T_A = 25°C, V_S = 5 V, G = +1, R_F = 0 Ω, R_L = 1 kΩ, and connected to V_S / 2 (unless otherwise noted)

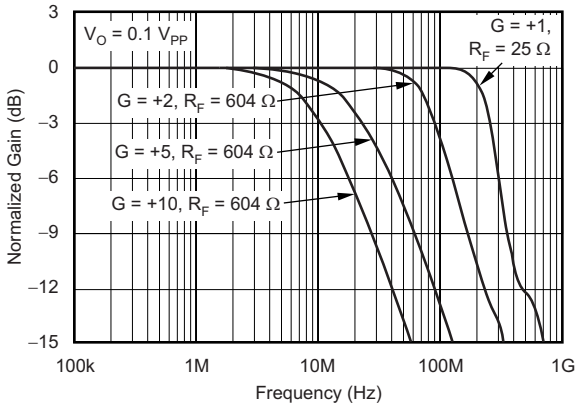

Figure 1. Noninverting Small-Signal Frequency Response

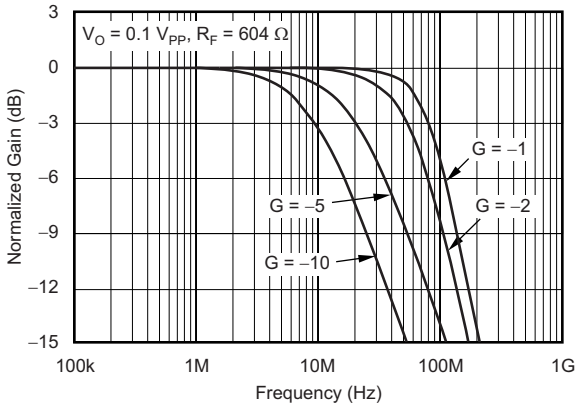

Figure 2. Inverting Small-Signal Frequency Response

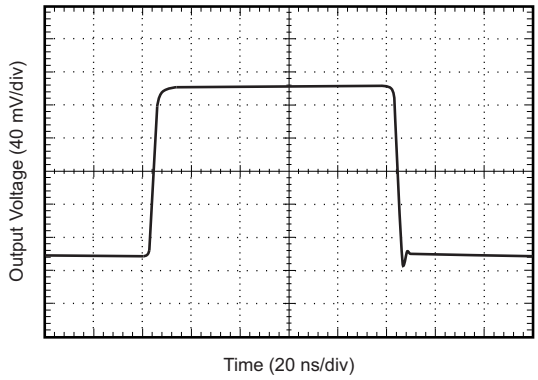

Figure 3. Noninverting Small-Signal Step Response

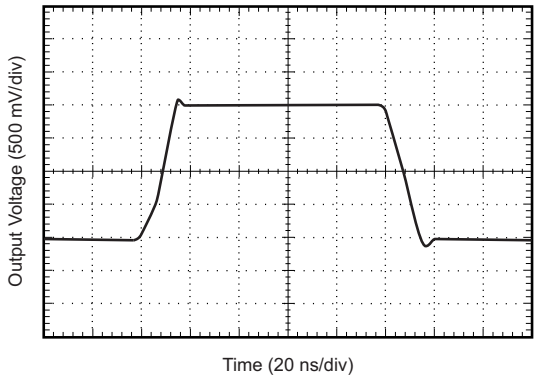

Figure 4. Noninverting Large-Signal Step Response

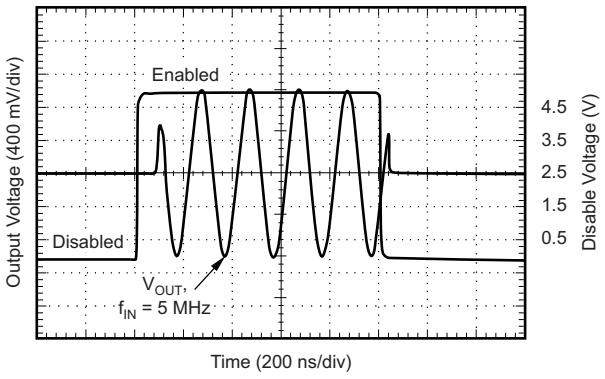

Figure 5. Large-Signal Disable, Enable Response

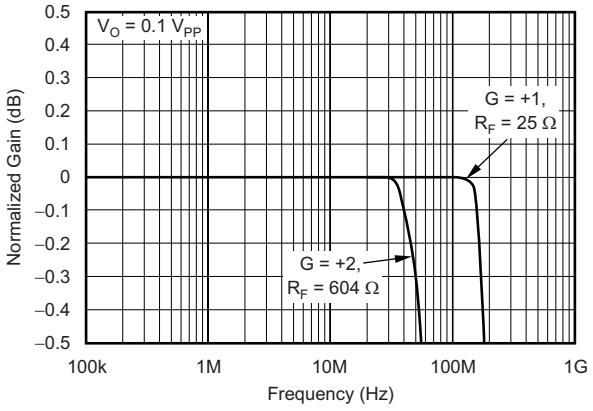

Figure 6. 0.1-dB Gain Flatness

Copyright © 2002–2018, Texas Instruments Incorporated

Typical Characteristics (continued)

at T_A = 25°C, V_S = 5 V, G = +1, R_F = 0 Ω, R_L = 1 kΩ, and connected to V_S / 2 (unless otherwise noted)

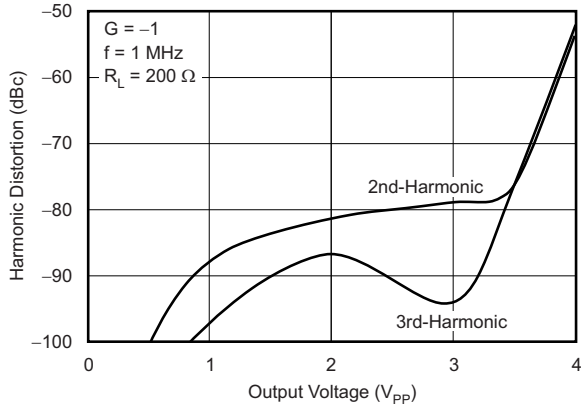

Figure 7. Harmonic Distortion vs Output Voltage

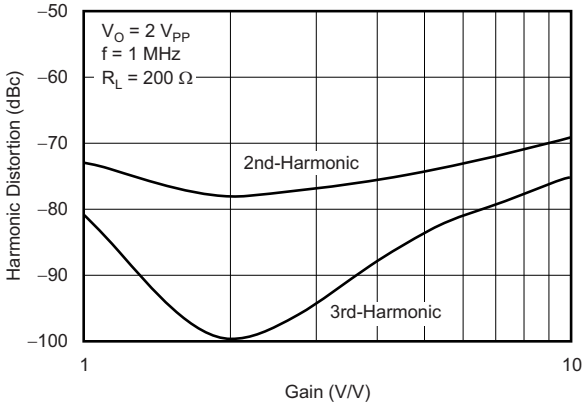

Figure 8. Harmonic Distortion vs Noninverting Gain

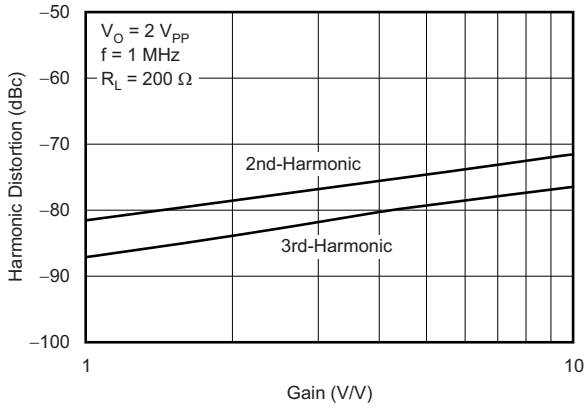

Figure 9. Harmonic Distortion vs Inverting Gain

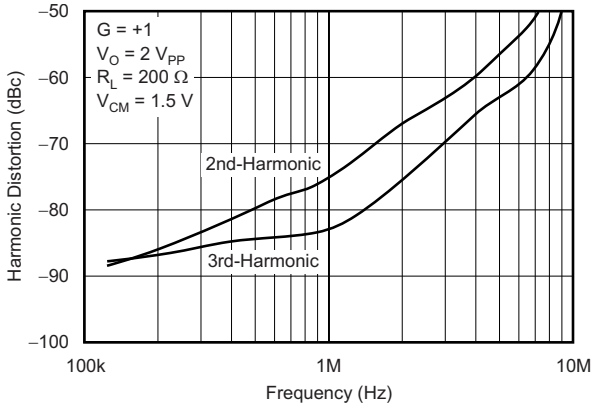

Figure 10. Harmonic Distortion vs Frequency

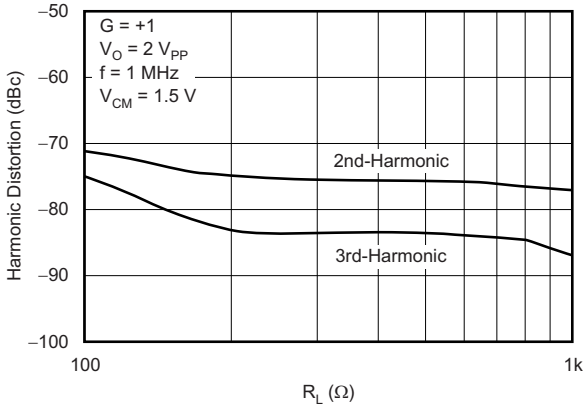

Figure 11. Harmonic Distortion vs Load Resistance

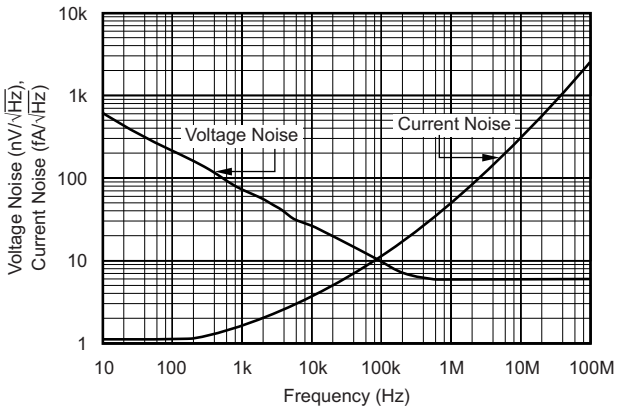

Figure 12. Input Voltage and Current Noise Spectral Density vs Frequency

Copyright © 2002–2018, Texas Instruments Incorporated

Typical Characteristics (continued)

at T_A = 25°C, V_S = 5 V, G = +1, R_F = 0 Ω, R_L = 1 kΩ, and connected to V_S / 2 (unless otherwise noted)

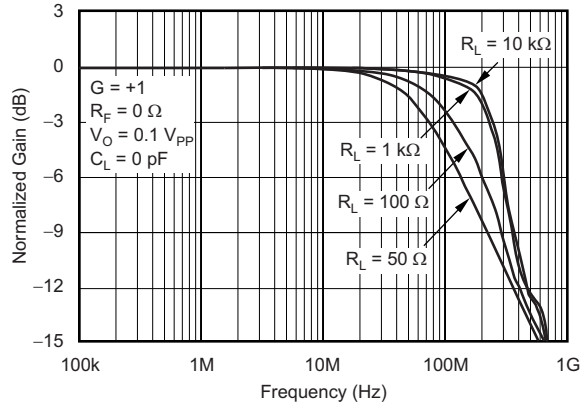

Figure 13. Frequency Response for Various R_L

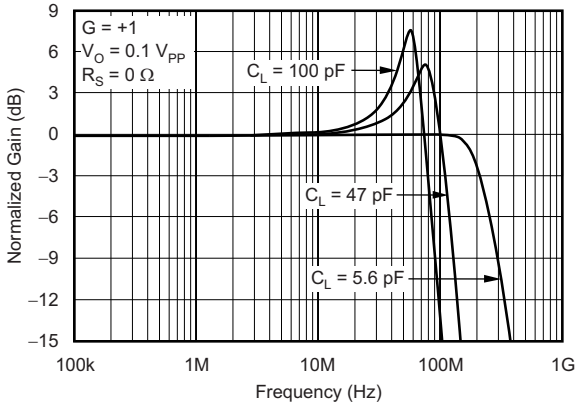

Figure 14. Frequency Response for Various C_L

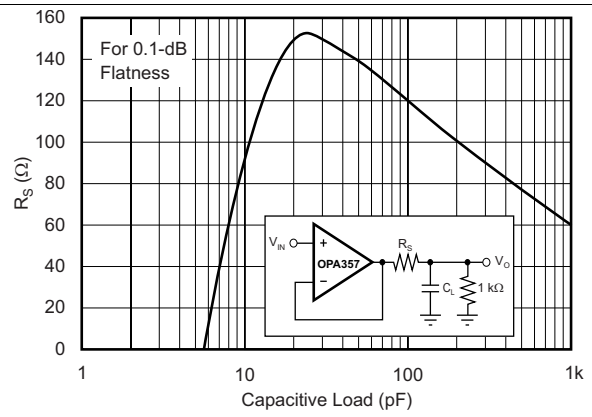

Figure 15. Recommended R_S vs Capacitive Load

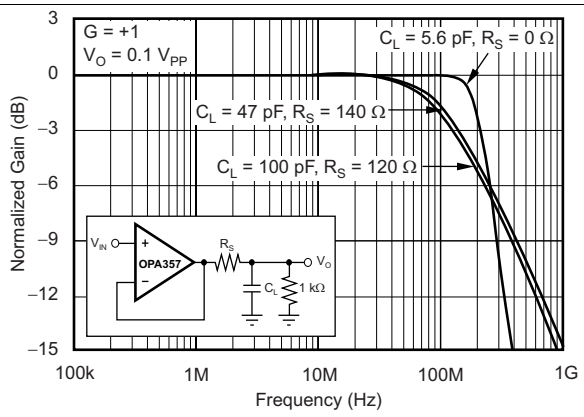

Figure 16. Frequency Response vs Capacitive Load

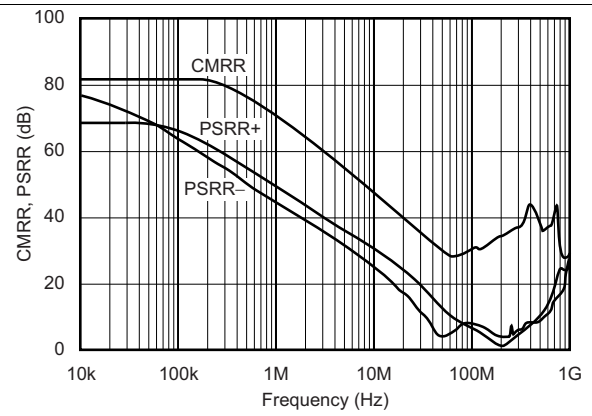

Figure 17. Common-Mode Rejection Ratio and Power-Supply Rejection Ratio vs Frequency

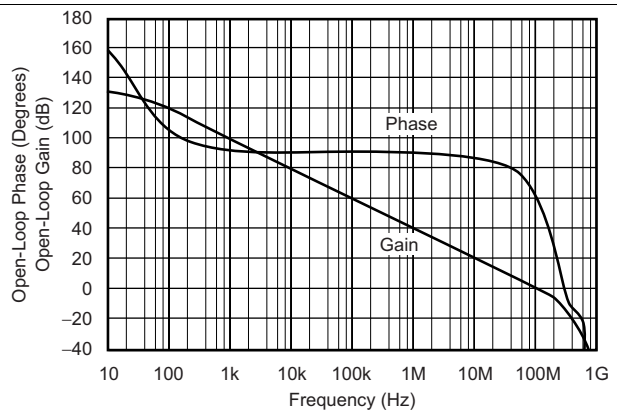

Figure 18. Open-Loop Gain and Phase

Copyright © 2002–2018, Texas Instruments Incorporated

Typical Characteristics (continued)

at T_A = 25°C, V_S = 5 V, G = +1, R_F = 0 Ω, R_L = 1 kΩ, and connected to V_S / 2 (unless otherwise noted)

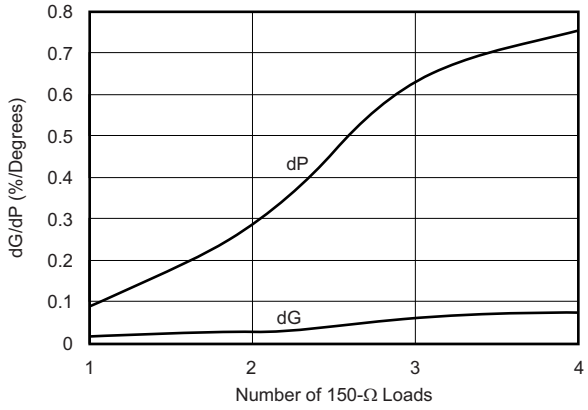

Figure 19. Composite Video differential Gain and Phase

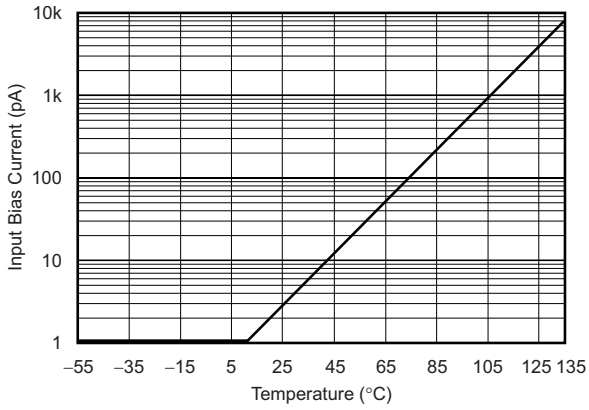

Figure 20. Input Bias Current vs Temperature

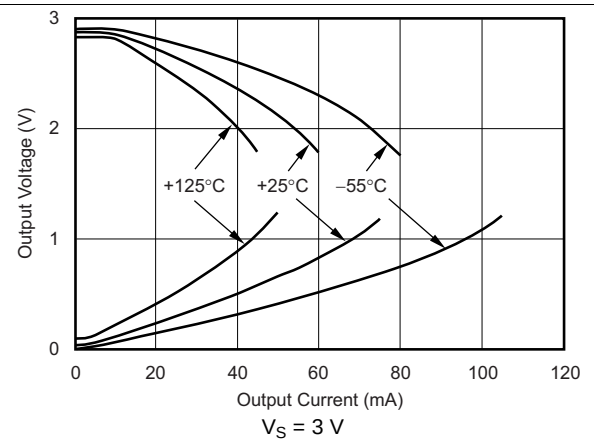

Figure 21. Output Voltage Swing vs Output Current

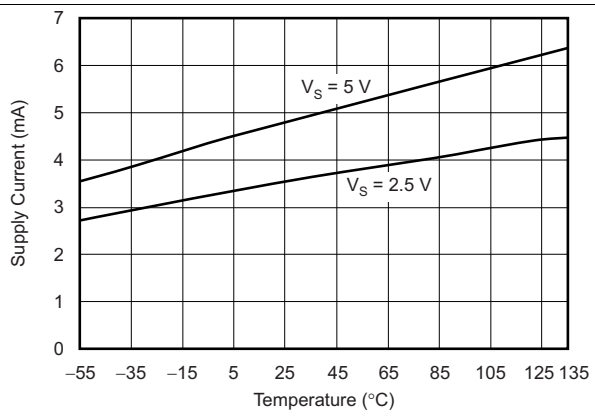

Figure 22. Supply Current vs Temperature

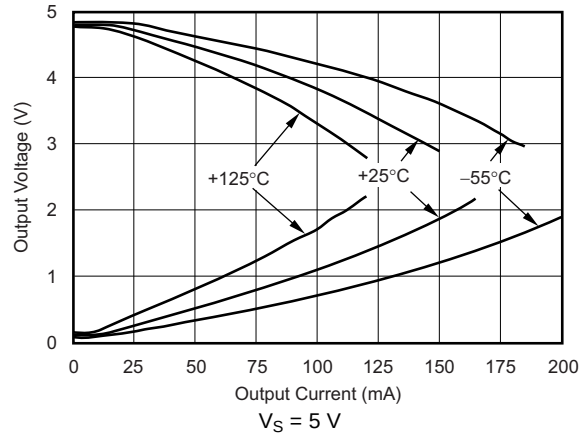

Figure 23. Output Voltage Swing vs Output Current

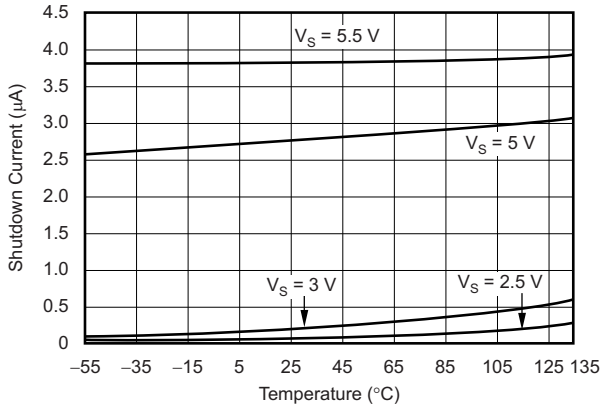

Figure 24. Shutdown Current vs Temperature

Copyright © 2002–2018, Texas Instruments Incorporated

Typical Characteristics (continued)

at T_A = 25°C, V_S = 5 V, G = +1, R_F = 0 Ω, R_L = 1 kΩ, and connected to V_S / 2 (unless otherwise noted)

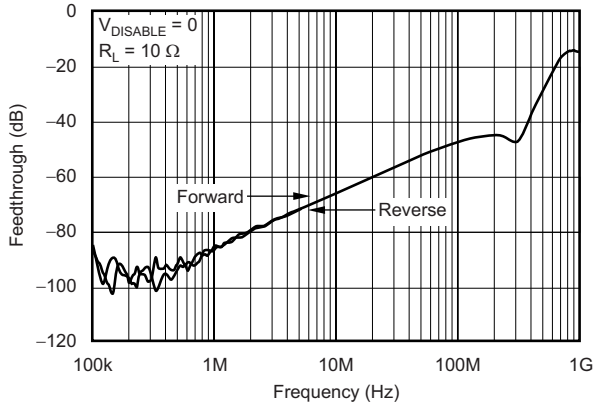

Figure 25. Disable Feedthrough vs Frequency

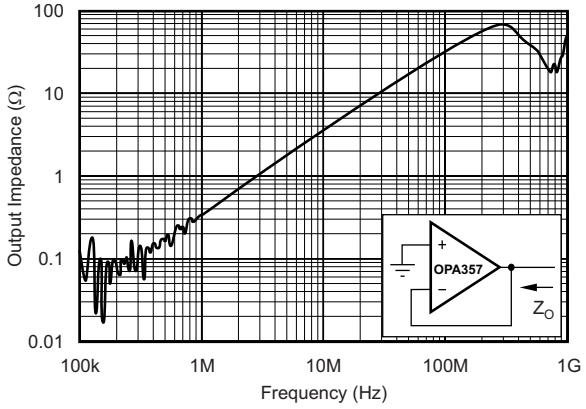

Figure 26. Closed-Loop Output Impedance vs Frequency

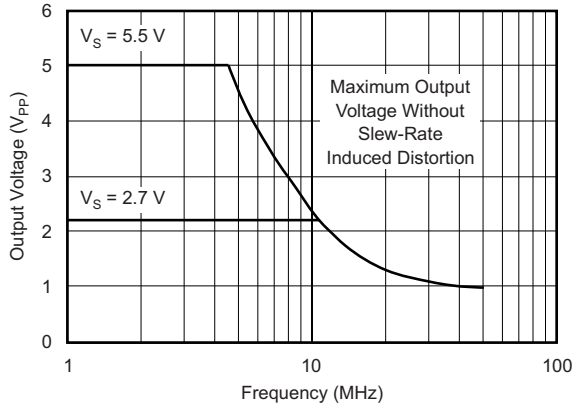

Figure 27. Maximum Output Voltage vs Frequency

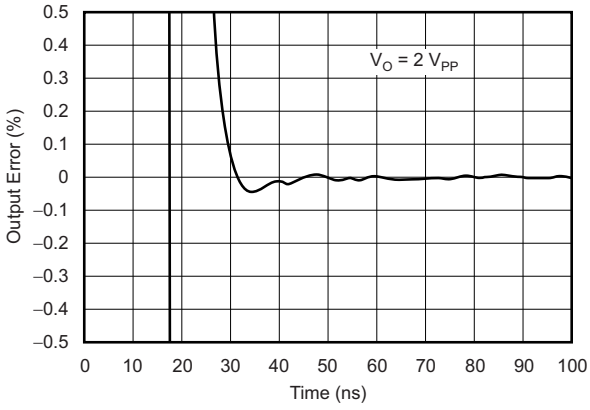

Figure 28. Output Settling Time to 0.1%

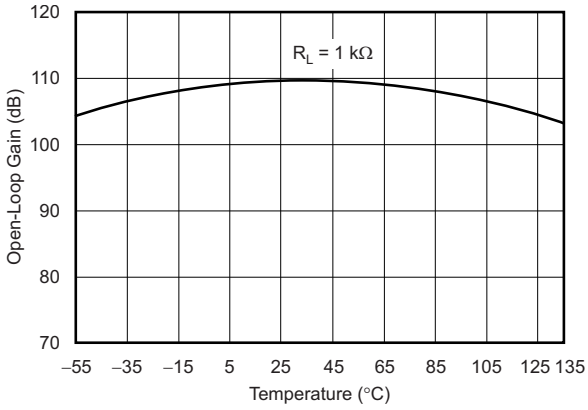

Figure 29. Open-Loop Gain vs Temperature

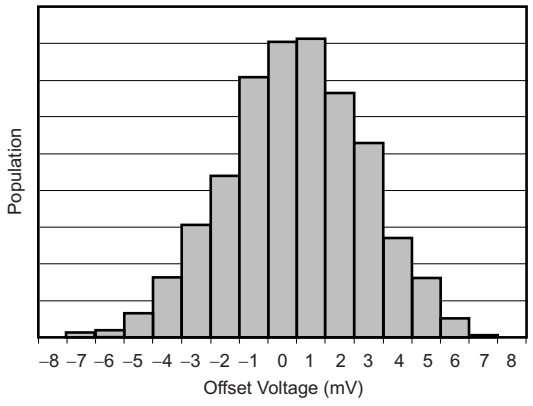

Figure 30. Offset Voltage Production Distribution

Typical Characteristics (continued)

at T_A = 25°C, V_S = 5 V, G = +1, R_F = 0 Ω, R_L = 1 kΩ, and connected to V_S / 2 (unless otherwise noted)

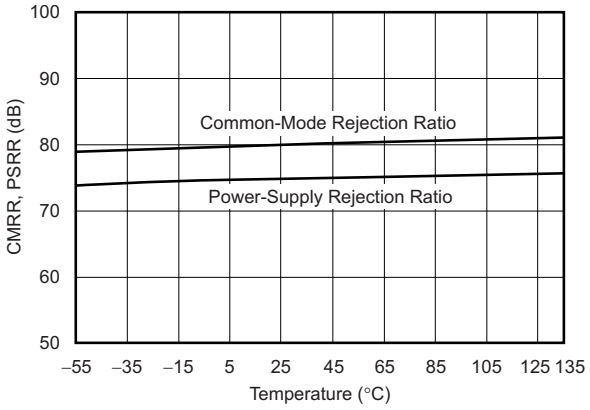

Figure 31. Common-Mode Rejection Ratio and Power-Supply Rejection Ratio vs Temperature

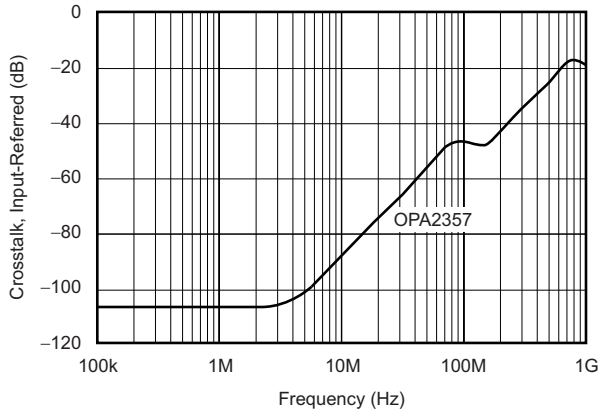

Figure 32. Channel-to-Channel Crosstalk

Copyright © 2002–2018, Texas Instruments Incorporated

7 Detailed Description

7.1 Overview

The OPA357 is a CMOS, rail-to-rail I/O, high-speed, voltage-feedback operational amplifier designed for video, high-speed, and other applications. The device is available as a single or dual op amp.

The amplifier features a 100-MHz gain bandwidth, and 150-V/µs slew rate, but is unity-gain stable and can be operated as a +1-V/V voltage follower.

7.2 Functional Block Diagram

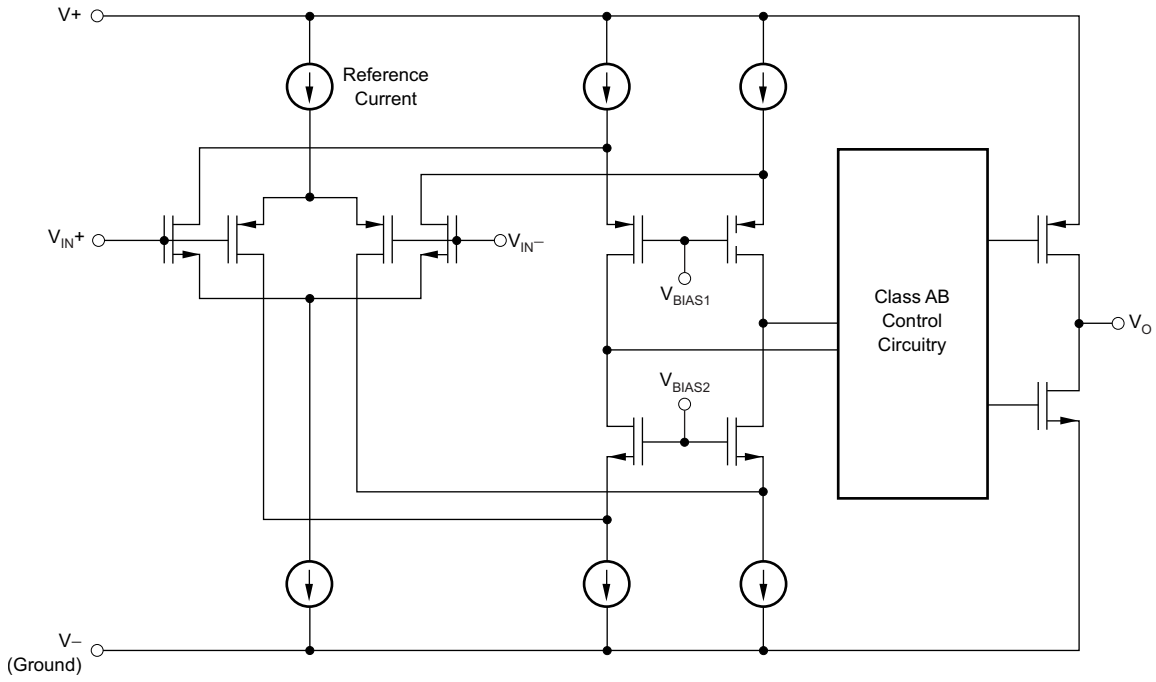

7.3 Feature Description

7.3.1 OPAx357 Comparison

Table 1 lists several members of the device family that includes the OPAx357.

Table 1. OPAx357 Related Products

PART NUMBER	FEATURED
OPAx354	Non-shutdown version of OPA357 family
OPAx355	200-MHz GBW, rail-to-rail output, CMOS, shutdown
OPAx356	200-MHz GBW, rail-to-rail output, CMOS
OPAx350, OPAx353	38-MHz GBW, rail-to-rail input/output, CMOS
OPAx631	75-MHz BW G = 2, rail-to-rail output
OPAx634	150-MHz BW G = 2, rail-to-rail output
THS412x	100-MHz BW, differential input/output, 3.3-V supply

7.3.2 Operating Voltage

The OPA357 is specified over a power-supply range of +2.7 V to +5.5 V (±1.35 V to ±2.75 V). However, the supply voltage can range from +2.5 V to +5.5 V (±1.25 V to ±2.75 V). Supply voltages higher than 7.5 V (absolute maximum) can permanently damage the amplifier.

Parameters that vary over supply voltage or temperature are shown in the *Typical Characteristics* section.

7.3.3 Enable Function

The OPA357 enable function is implemented using a Schmitt trigger. The amplifier is enabled by applying a TTL high voltage level (referenced to V−) to the Enable pin. Conversely, a TTL low voltage level (referenced to V−) disables the amplifier, reducing its supply current from 4.9 mA to only 3.4 µA per amplifier. Independent Enable pins are available for each channel (dual version), providing maximum design flexibility. For portable battery-operated applications, this feature can be used to greatly reduce the average current and thereby extend battery life.

The Enable input can be modeled as a CMOS input gate with a 100-kΩ pull-up resistor to V+. Connect this pin to a valid high or low voltage or driven, not left open circuit.

The enable time is 100 ns and the disable time is only 30 ns. This time allows the OPA357 to be operated as a gated amplifier, or to have its output multiplexed onto a common output bus. When disabled, the output assumes a high-impedance state.

7.3.4 Rail-to-Rail Input

The specified input common-mode voltage range of the OPA357 extends 100 mV beyond the supply rails. This range is achieved with a complementary input stage—an N-channel input differential pair in parallel with a P-channel differential pair; see the *Functional Block Diagram* section. The N-channel pair is active for input voltages close to the positive rail, typically (V+) − 1.2 V to 100 mV above the positive supply, whereas the P-channel pair is on for inputs from 100 mV below the negative supply to approximately (V+) − 1.2 V. There is a small transition region, typically (V+) − 1.5 V to (V+) − 0.9 V, in which both pairs are on. This 600-mV transition region can vary ±500 mV with process variation. Thus, the transition region (both input stages on) can range from (V+) − 2.0 V to (V+) − 1.5 V on the low end, up to (V+) − 0.9 V to (V+) − 0.4 V on the high end.

A double-folded cascode adds the signal from the two input pairs and presents a differential signal to the class AB output stage.

7.3.5 Rail-to-Rail Output

A class AB output stage with common-source transistors is used to achieve rail-to-rail output. For high-impedance loads (> 200 Ω), the output voltage swing is typically 100 mV from the supply rails. With 10-Ω loads, a useful output swing can be achieved while maintaining high open-loop gain; see Figure 21 and Figure 23.

Copyright © 2002–2018, Texas Instruments Incorporated

7.3.6 Output Drive

The OPA357 output stage can supply a continuous output current of ±100 mA and still provide approximately 2.7 V of output swing on a 5-V supply, as shown in Figure 33. For maximum reliability, TI recommends running a continuous DC current in excess of ±100 mA; see Figure 21 and Figure 23. For supplying continuous output currents greater than ±100 mA, the OPA357 can be operated in parallel as shown in Figure 34.

The OPA357 provides peak currents up to 200 mA, which corresponds to the typical short-circuit current. Therefore, an on-chip thermal shutdown circuit is provided to protect the OPA357 from dangerously high junction temperatures. At 160°C, the protection circuit shuts down the amplifier. Normal operation resumes when the junction temperature cools to below 140°C.

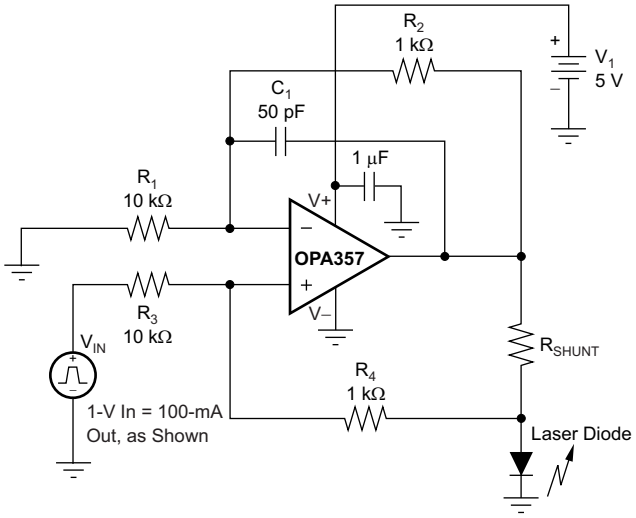

Figure 33. Laser Diode Driver

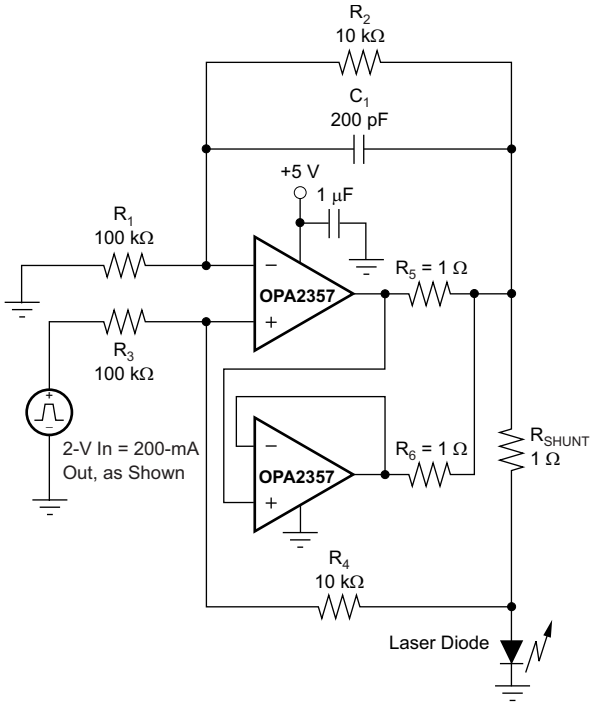

Figure 34. Parallel Operation

7.3.7 Video

The OPA357 output stage is capable of driving standard back-terminated 75-Ω video cables, as shown in Figure 35. By back-terminating a transmission line, the cable does not exhibit a capacitive load to its driver. A properly back-terminated 75-Ω cable does not appear as capacitance; this cable presents only a 150-Ω resistive load to the OPA357 output.

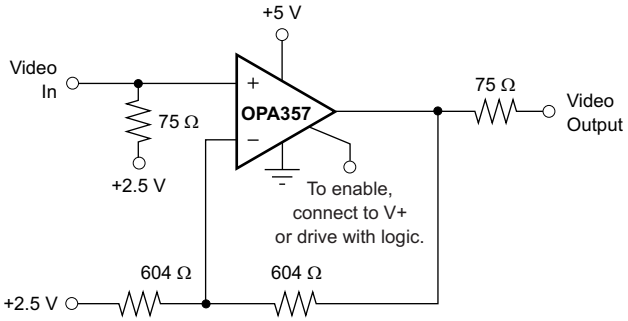

Figure 35. Single-Supply Video Line Driver

The OPA357 can be used as an amplifier for RGB graphic signals, which have a voltage of zero at the video black level, by offsetting and AC-coupling the signal, as shown in Figure 36.

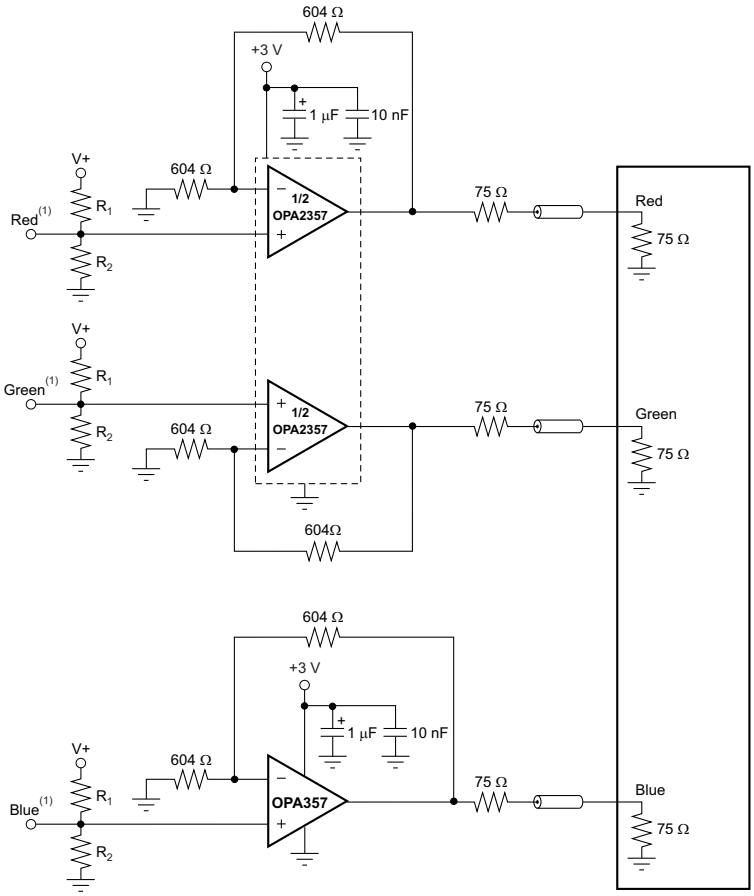

(1) The source video signal offset is 300 mV above ground to accommodate the op amp swing-to-ground capability.

Figure 36. RGB Cable Driver

Copyright © 2002–2018, Texas Instruments Incorporated

7.3.8 Wideband Video Multiplexing

One common application for video speed amplifiers that include an Enable pin is to wire multiple amplifier outputs together, then select which one of several possible video inputs to source onto a single line. This simple wired-OR video multiplexer can be easily implemented using the OPA357, as shown in Figure 37.

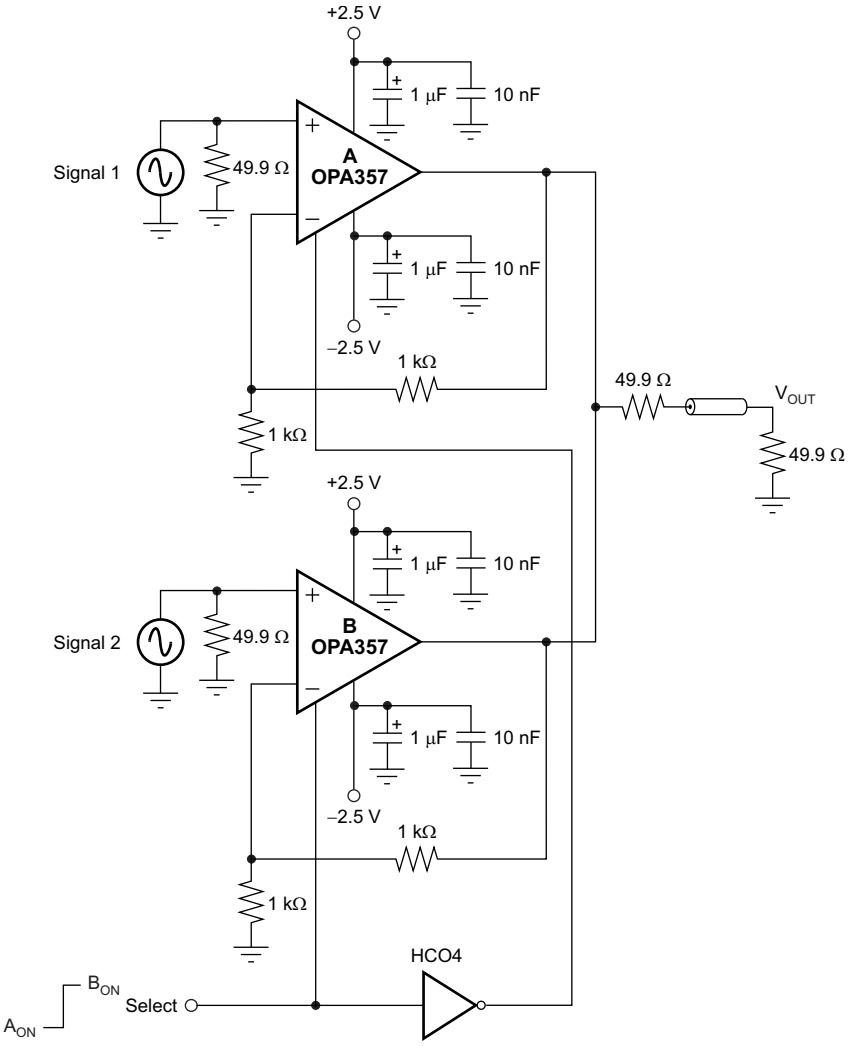

Figure 37. Multiplexed Output

7.3.9 Driving Analog-to-Digital Converters

The OPA357 series op amps offer 60 ns of settling time to 0.01%, making the series a good choice for driving high- and medium-speed sampling A/D converters and reference circuits. The OPA357 series provides an effective means of buffering the A/D converter input capacitance and resulting charge injection while providing signal gain.

Figure 38 shows the OPA357 driving an A/D converter. With the OPA357 in an inverting configuration, a capacitor across the feedback resistor can be used to filter high-frequency noise in the signal, as shown in Figure 38.

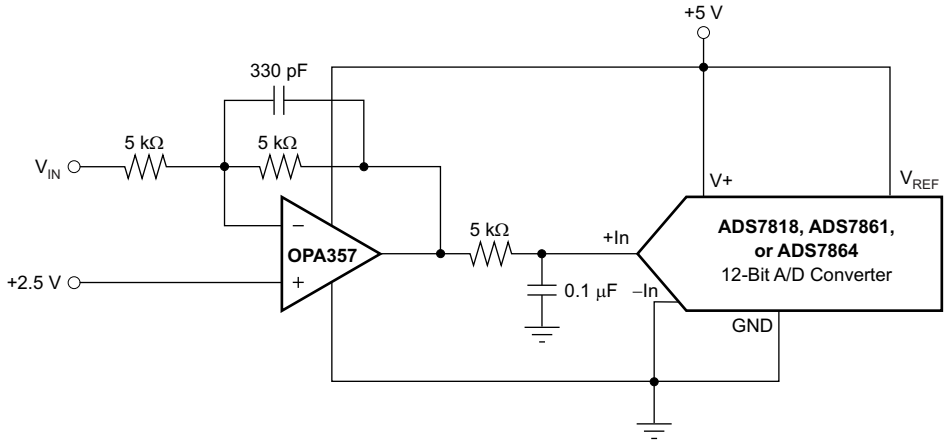

NOTE: A/D converter input = 0 V to V_{REF}.

NOTE: V_{IN} = 0 V to –5 V for a 0-V to 5-V output.

Figure 38. The OPA357 in Inverting Configuration Driving an A/D Converter

7.3.10 Capacitive Load and Stability

The OPA357 series of op amps can drive a wide range of capacitive loads. However, all op amps under certain conditions may become unstable. Op amp configuration, gain, and load value are just a few factors to consider when determining stability. An op amp in unity-gain configuration is most susceptible to the effects of capacitive loading. The capacitive load reacts with the op amp output resistance, along with any additional load resistance, to create a pole in the small-signal response that degrades the phase margin; see Figure 14 for details.

The OPA357 topology enhances its ability to drive capacitive loads. In unity gain, these op amps perform well with large capacitive loads. See Figure 15 for details.

One method of improving capacitive load drive in the unity-gain configuration is to insert a 10-Ω to 20-Ω resistor in series with the output, as shown in Figure 39. This method significantly reduces ringing with large capacitive loads; see Figure 14. However, if there is a resistive load in parallel with the capacitive load, R_S creates a voltage divider. This process introduces a DC error at the output and slightly reduces output swing. This error can be insignificant. For instance, with R_L = 10 kΩ and R_S = 20 Ω, there is only about a 0.2% error at the output.

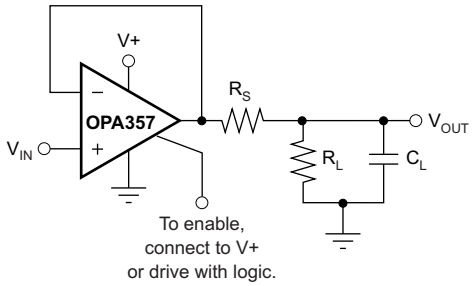

Figure 39. Series Resistor in Unity-Gain Configuration Improves Capacitive Load Drive

Copyright © 2002–2018, Texas Instruments Incorporated

7.3.11 Wideband Transimpedance Amplifier

Wide bandwidth, low input bias current, and low input voltage and current noise make the OPA357 an ideal wideband photodiode transimpedance amplifier for low-voltage single-supply applications. Low-voltage noise is important because photodiode capacitance causes the effective noise gain of the circuit to increase at high frequency.

The key elements to a transimpedance design, as shown in Figure 40, are the expected diode capacitance (including the parasitic input common-mode and differential-mode input capacitance (2 + 2)pF for the OPA357), the desired transimpedance gain (R_F), and the gain bandwidth product (GBP) for the OPA357 (100 MHz). With these three variables set, the feedback capacitor value (C_F) can be set to control the frequency response.

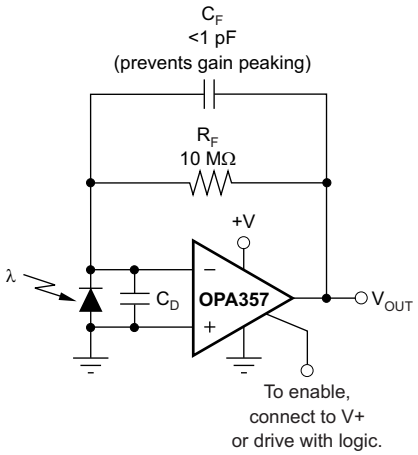

Figure 40. Transimpedance Amplifier

To achieve a maximally flat 2nd-order Butterworth frequency response, set the feedback pole to:

$$\frac{1}{2\pi R_F C_F} = \sqrt{\frac{GBP}{4\pi R_F C_D}} \quad (1)$$

Typical surface-mount resistors have a parasitic capacitance of approximately 0.2 pF that must be deducted from the calculated feedback capacitance value.

Bandwidth is calculated by:

$$f_{-3dB} = \sqrt{\frac{GBP}{2\pi R_F C_D}} \text{ Hz} \quad (2)$$

For even higher transimpedance bandwidth, the high-speed CMOS OPA355 (200-MHz GBW) or the OPA655 (400-MHz GBW) can be used.

7.4 Device Functional Modes

The OPAx357 family of devices is powered on when the supply is connected. The devices can be operated as single-supply operational amplifiers or dual-supply amplifiers depending on the application. The devices can also be used with asymmetrical supplies as long as the differential voltage (V– to V+) is at least 1.8 V and no greater than 5.5 V (for example, when V– is set to –3.5 V and V+ is set to 1.5 V).

Copyright © 2002–2018, Texas Instruments Incorporated

8 Application and Implementation

NOTE

Information in the following applications sections is not part of the TI component specification, and TI does not warrant its accuracy or completeness. TI's customers are responsible for determining suitability of components for their purposes. Customers should validate and test their design implementation to confirm system functionality.

8.1 Application Information

The OPAx357 family of devices is a CMOS, rail-to-rail I/O, high-speed, voltage-feedback operational amplifier designed for video, high-speed, and other applications. The OPAx357 family of devices is available as a single or dual op-amp.

The amplifier features a 100-MHz gain bandwidth, and 150-V/μs slew rate, but the device is unity-gain stable and operates as a 1-V/V voltage follower.

8.2 Typical Applications

8.2.1 Transimpedance Amplifier

Wide gain bandwidth, low input bias current, low input voltage, and current noise make the OPAx357 family of devices an ideal wideband photodiode transimpedance amplifier. Low-voltage noise is important because photodiode capacitance causes the effective noise gain of the circuit to increase at high frequency. The key elements to a transimpedance design, as shown in Figure 41, are the expected diode capacitance, (which include the parasitic input common-mode and differential-mode input capacitance) the desired transimpedance gain, and the gain-bandwidth (GBW) for the OPAx357 family of devices (20 MHz). With these three variables set, the feedback capacitor value is set to control the frequency response. Feedback capacitance includes the stray capacitance, which is 0.2 pF for a typical surface-mount resistor.

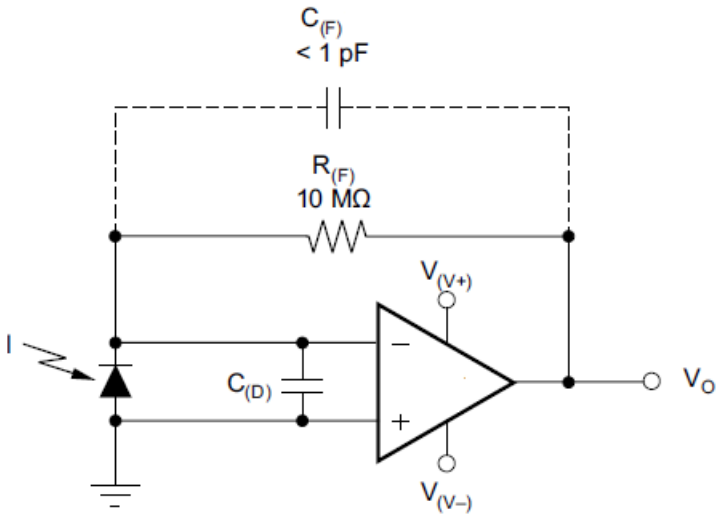

Figure 41. Dual-Supply Transimpedance Amplifier

Copyright © 2002–2018, Texas Instruments Incorporated

Typical Applications (continued)

8.2.1.1 Design Requirements

For this design example, use the parameters listed in Table 2 as the input parameters.

Table 2. Design Parameters

PARAMETER	EXAMPLE VALUE
Supply voltage, $V_{(V+)}$	2.5 V
Supply voltage, $V_{(V-)}$	–2.5 V

$C_{(F)}$ is optional to prevent gain peaking. $C_{(F)}$ includes the stray capacitance of $R_{(F)}$.

8.2.1.2 Detailed Design Procedure

8.2.1.2.1 Custom Design With WEBENCH® Tools

Click here to create a custom design using the OPA357 device with the WEBENCH® Power Designer.

1. Start by entering the input voltage (V_{IN}), output voltage (V_{OUT}), and output current (I_{OUT}) requirements.
2. Optimize the design for key parameters such as efficiency, footprint, and cost using the optimizer dial.
3. Compare the generated design with other possible solutions from Texas Instruments.

The WEBENCH Power Designer provides a customized schematic along with a list of materials with real-time pricing and component availability.

In most cases, these actions are available:

- Run electrical simulations to see important waveforms and circuit performance
- Run thermal simulations to understand board thermal performance
- Export customized schematic and layout into popular CAD formats
- Print PDF reports for the design, and share the design with colleagues

Get more information about WEBENCH tools at www.ti.com/WEBENCH.

8.2.1.2.2 OPAx357 Design Procedure

To achieve a maximally-flat, second-order Butterworth frequency response, set the feedback pole using Equation 3.

$$\frac{1}{2 \times \pi \times R_{(F)} \times C_{(F)}} = \sqrt{\frac{GBW}{4 \times \pi \times R_{(F)} \times C_{(D)}}} \quad (3)$$

Calculate the bandwidth using Equation 4.

$$f_{(-3\ dB)} = \sqrt{\frac{GBW}{2 \times \pi \times R_{(F)} \times C_{(D)}}} \quad (4)$$

For other transimpedance bandwidths, consider the high-speed CMOS OPA380 (90-MHz GBW), OPA354 (100-MHz GBW), OPA300 (180-MHz GBW), OPA355 (200-MHz GBW), or OPA656 and OPA657 (400-MHz GBW).

Copyright © 2002–2018, Texas Instruments Incorporated

For single-supply applications, the +INx input can be biased with a positive DC voltage to allow the output to reach true zero when the photodiode is not exposed to any light, and respond without the added delay that results from coming out of the negative rail; Figure 42 shows this configuration. This bias voltage appears across the photodiode, providing a reverse bias for faster operation.

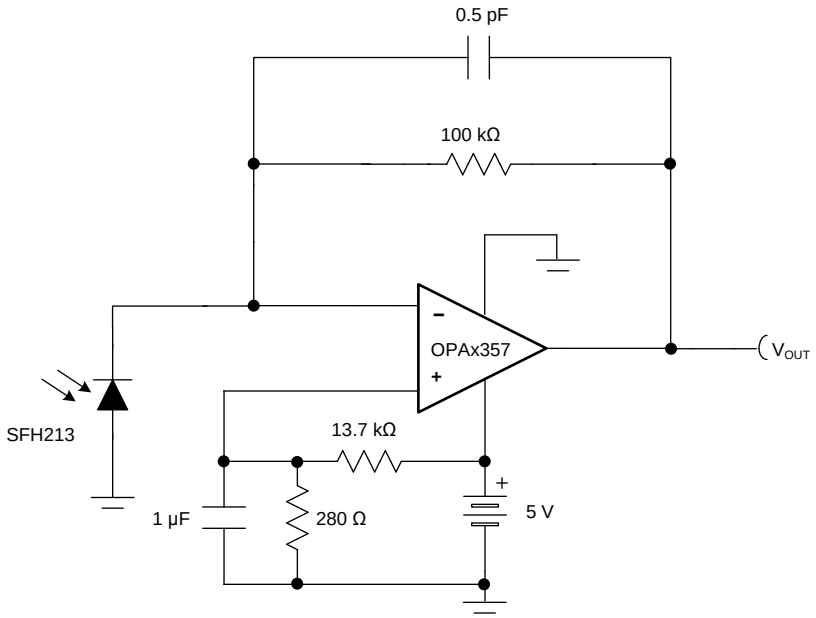

Figure 42. Single-Supply Transimpedance Amplifier

For additional information, see the *Compensate Transimpedance Amplifiers Intuitively* application bulletin.

8.2.1.2.2.1 Optimizing the Transimpedance Circuit

To achieve the best performance, components must be selected according to the following guidelines:

1. For lowest noise, select $R_{(F)}$ to create the total required gain. Using a lower value for $R_{(F)}$ and adding gain after the transimpedance amplifier generally produces poorer noise performance. The noise produced by $R_{(F)}$ increases with the square-root of $R_{(F)}$, whereas the signal increases linearly. Therefore, signal-to-noise ratio improves when all the required gain is placed in the transimpedance stage.
2. Minimize photodiode capacitance and stray capacitance at the summing junction (inverting input). This capacitance causes the voltage noise of the op amp to amplify (increasing amplification at high frequency). Using a low-noise voltage source to reverse-bias a photodiode reduce the capacitance. Smaller photodiodes have lower capacitance. Use optics to concentrate light on a small photodiode.
3. Noise increases with increased bandwidth. Limit the circuit bandwidth to only the required bandwidth. Use a capacitor across the $R_{(F)}$ to limit bandwidth, even if a capacitor not required for stability.
4. Circuit board leakage degrades the performance of an otherwise well-designed amplifier. Clean the circuit board carefully. A circuit board guard trace that encircles the summing junction and is driven at the same voltage helps control leakage.

Copyright © 2002–2018, Texas Instruments Incorporated

8.2.1.3 Application Curve

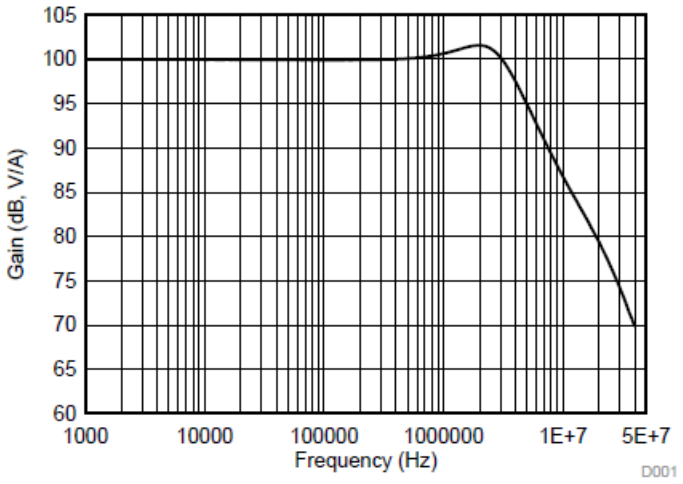

Figure 43. AC Transfer Function

8.2.2 High-Impedance Sensor Interface

Many sensors have high source impedances that can range up to 10 MΩ, or even higher. The output signal of sensors often must be amplified or otherwise conditioned by an amplifier. The input bias current of this amplifier can load the sensor output and cause a voltage drop across the source resistance, as shown in Figure 44, where ($V_{(+INx)} = V_S - I_{(BIAS)} \times R_{(S)}$). The last term, $I_{(BIAS)} \times R_{(S)}$, shows the voltage drop across $R_{(S)}$. To prevent errors introduced to the system as a result of this voltage, use an op amp with low input bias current and high-impedance sensors. This low current keeps the error contribution by $I_{(BIAS)} \times R_{(S)}$ less than the input voltage noise of the amplifier, so that the amplifier does not become the dominant noise factor. The OPAx357 family of devices series of op amps feature low input bias current (typically 200 fA), and are therefore designed for such applications.

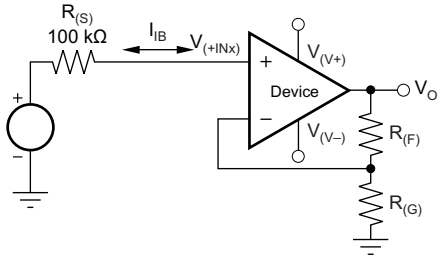

Figure 44. Noise as a Result of $I_{(BIAS)}$

8.2.3 Driving ADCs

The OPAx357 op amps are designed for driving sampling analog-to-digital (A/D) converters with sampling speeds up to 1 MSPS. The zero-crossover distortion input stage topology allows the OPAx357 family of devices to drive A/D converters without degradation of differential linearity and THD.

The OPAx357 family of devices can be used to buffer the A/D converter switched input capacitance and resulting charge injection while providing signal gain. Figure 45 shows the OPAx357 family of devices configured to drive the ADS8326.

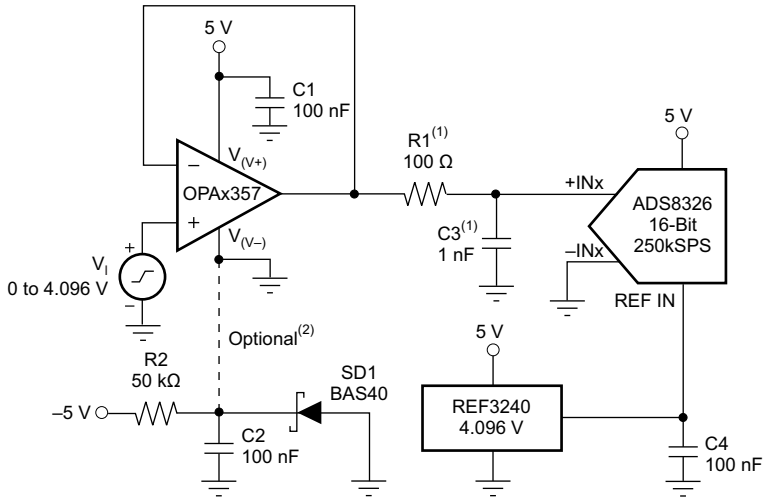

(1) Suggested value; may require adjustment based on specific application.

(2) Single-supply applications lose a small number of A/D converter codes near ground as a result of op amp output swing limitation. If a negative power supply is available, this simple circuit creates a –0.3-V supply to allow output swing to true ground potential.

Figure 45. Driving the ADS8326

Copyright © 2002–2018, Texas Instruments Incorporated

8.2.4 Active Filter

The OPAx357 family of devices is designed for active filter applications that require a wide bandwidth, fast slew rate, low-noise, single-supply operational amplifier. Figure 46 shows a 500-kHz, second-order, low-pass filter using the multiple-feedback (MFB) topology. The components are selected to provide a maximally-flat Butterworth response. Beyond the cutoff frequency, roll-off is –40 dB/dec. The Butterworth response is designed for applications requiring predictable gain characteristics, such as the antialiasing filter used in front of an A/D converter.

One point to note when considering the MFB filter is that the output is inverted relative to the input. If this inversion is not required, or not desired, a noninverting output can be achieved through one of the following options:

1. Adding an inverting amplifier
2. Adding an additional second-order MFB stage
3. Using a noninverting filter topology, such as the Sallen-Key (see Figure 47).

MFB and Sallen-Key, low-pass and high-pass filter synthesis is accomplished using TI's FilterPro™ program. This software is available as a free download on www.ti.com.

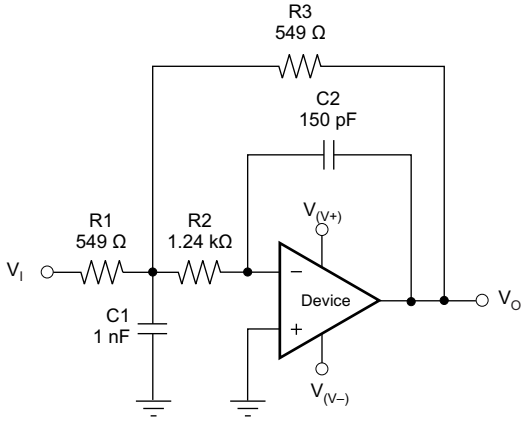

Figure 46. Second-Order, Butterworth, 500-kHz, Low-Pass Filter

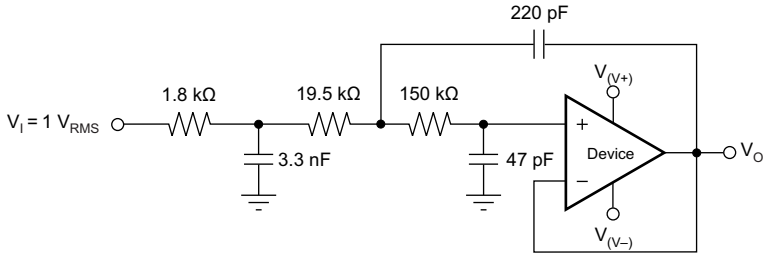

Figure 47. OPAx357 Configured as a Three-Pole, 20-kHz, Sallen-Key Filter

9 Power Supply Recommendations

9.1 Power Dissipation

For resistive loads, the maximum power dissipation occurs at a DC output voltage of one-half the power-supply voltage. Dissipation with AC signals is lower. The *Power Amplifier Stress and Power Handling Limitations* application note explains how to calculate or measure power dissipation with unusual signals and loads, and can be found at www.ti.com. Any tendency to activate the thermal protection circuit indicates excessive power dissipation or an inadequate heat sink. For reliable operation, limit junction temperature to 150°C, maximum. To estimate the margin of safety in a complete design, increase the ambient temperature until the thermal protection is triggered at 160°C. The thermal protection should trigger more than 35°C above the maximum expected ambient condition of your application.

10 Layout

10.1 Layout Guidelines

Use good high-frequency printed circuit board (PCB) layout techniques for the OPA357. Generous use of ground planes, short and direct signal traces, and a suitable bypass capacitor located at the V+ pin assures clean, stable operation. Large areas of copper also provide a means of dissipating heat that is generated in normal operation.

Sockets are definitely not recommended for use with any high-speed amplifier.

A 10-nF ceramic bypass capacitor is the minimum recommended value; adding a 1-μF or larger tantalum capacitor in parallel can be beneficial when driving a low-resistance load. Providing adequate bypass capacitance is essential to achieving very low harmonic and intermodulation distortion.

10.2 Layout Example

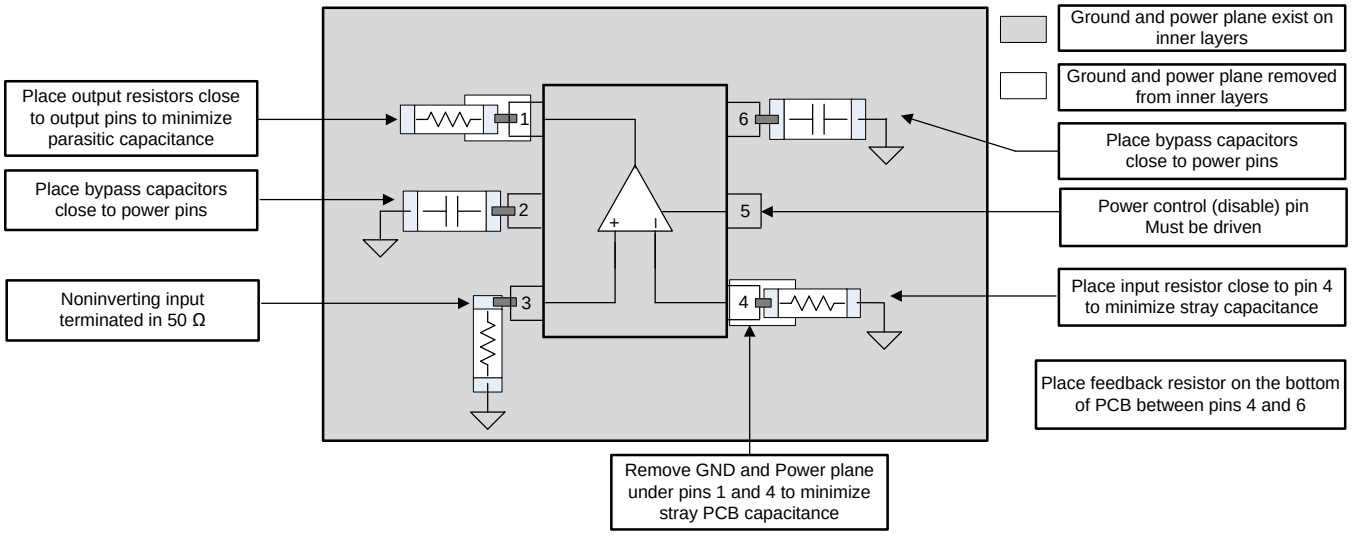

Figure 48. Example Layout

Copyright © 2002–2018, Texas Instruments Incorporated

11 Device and Documentation Support

11.1 Device Support

11.1.1 Development Support

11.1.1.1 Custom Design With WEBENCH® Tools

Click here to create a custom design using the OPA357 device with the WEBENCH® Power Designer.

1. Start by entering the input voltage (V_{IN}), output voltage (V_{OUT}), and output current (I_{OUT}) requirements.
2. Optimize the design for key parameters such as efficiency, footprint, and cost using the optimizer dial.
3. Compare the generated design with other possible solutions from Texas Instruments.

The WEBENCH Power Designer provides a customized schematic along with a list of materials with real-time pricing and component availability.

In most cases, these actions are available:

- Run electrical simulations to see important waveforms and circuit performance
- Run thermal simulations to understand board thermal performance
- Export customized schematic and layout into popular CAD formats
- Print PDF reports for the design, and share the design with colleagues

Get more information about WEBENCH tools at www.ti.com/WEBENCH.

11.2 Documentation Support

11.2.1 Related Documentation

For related documentation see the following:

- *OPAx380 Precision, High-Speed Transimpedance Amplifier*
- *OPAx354 250-MHz, Rail-to-Rail I/O, CMOS Operational Amplifiers*
- *OPAx300 Low-Noise, High-Speed, 16-Bit Accurate, CMOS Operational Amplifier*
- *OPAx355 200MHz, CMOS Operational Amplifier with Shutdown*
- *OPA656 Wideband, Unity-Gain Stable, FET-Input Operational Amplifier*
- *OPA657 1.6-GHz, Low-Noise, FET-Input Operational Amplifier*
- *ADS8326 16-Bit, High-Speed, 2.7V to 5.5V microPower Sampling Analog-to-Digital Converter*
- FilterPro™
- *Compensate Transimpedance Amplifiers Intuitively*
- *Power Amplifier Stress and Power Handling Limitations*

11.3 Related Links

The table below lists quick access links. Categories include technical documents, support and community resources, tools and software, and quick access to order now.

Table 3. Related Links

PARTS	PRODUCT FOLDER	ORDER NOW	TECHNICAL DOCUMENTS	TOOLS & SOFTWARE	SUPPORT & COMMUNITY
OPA357	Click here	Click here	Click here	Click here	Click here
OPA2357	Click here	Click here	Click here	Click here	Click here

11.4 Receiving Notification of Documentation Updates

To receive notification of documentation updates, navigate to the device product folder on ti.com. In the upper right corner, click on *Alert me* to register and receive a weekly digest of any product information that has changed. For change details, review the revision history included in any revised document.

Copyright © 2002–2018, Texas Instruments Incorporated

11.5 Community Resources

The following links connect to TI community resources. Linked contents are provided "AS IS" by the respective contributors. They do not constitute TI specifications and do not necessarily reflect TI's views; see TI's Terms of Use.

TI E2E™ Online Community ***TI's Engineer-to-Engineer (E2E) Community.*** Created to foster collaboration among engineers. At e2e.ti.com, you can ask questions, share knowledge, explore ideas and help solve problems with fellow engineers.

Design Support ***TI's Design Support*** Quickly find helpful E2E forums along with design support tools and contact information for technical support.

11.6 Trademarks

FilterPro, E2E are trademarks of Texas Instruments.
WEBENCH is a registered trademark of Texas Instruments.
All other trademarks are the property of their respective owners.

11.7 Electrostatic Discharge Caution



This integrated circuit can be damaged by ESD. Texas Instruments recommends that all integrated circuits be handled with appropriate precautions. Failure to observe proper handling and installation procedures can cause damage.

ESD damage can range from subtle performance degradation to complete device failure. Precision integrated circuits may be more susceptible to damage because very small parametric changes could cause the device not to meet its published specifications.

11.8 Glossary

SLYZ022 — *TI Glossary*.

This glossary lists and explains terms, acronyms, and definitions.

12 Mechanical, Packaging, and Orderable Information

The following pages include mechanical, packaging, and orderable information. This information is the most current data available for the designated devices. This data is subject to change without notice and revision of this document. For browser-based versions of this data sheet, refer to the left-hand navigation.

Copyright © 2002–2018, Texas Instruments Incorporated

PACKAGING INFORMATION

Orderable part number	Status (1)	Material type (2)	Package | Pins	Package qty | Carrier	RoHS (3)	Lead finish/ Ball material (4)	MSL rating/ Peak reflow (5)	Op temp (°C)	Part marking (6)
OPA2357AIDGSR	Active	Production	VSSOP (DGS) | 10	2500 | LARGE T&R	Yes	Call TI | Nipdauag	Level-2-260C-1 YEAR	-40 to 125	BBG
OPA2357AIDGSR.B	Active	Production	VSSOP (DGS) | 10	2500 | LARGE T&R	Yes	Call TI	Level-2-260C-1 YEAR	-40 to 125	BBG
OPA2357AIDGST	Active	Production	VSSOP (DGS) | 10	250 | SMALL T&R	Yes	NIPDAUAG	Level-2-260C-1 YEAR	-40 to 125	BBG
OPA2357AIDGST.B	Active	Production	VSSOP (DGS) | 10	250 | SMALL T&R	Yes	NIPDAUAG	Level-2-260C-1 YEAR	-40 to 125	BBG
OPA357AIDBVR	Active	Production	SOT-23 (DBV) | 6	3000 | LARGE T&R	Yes	NIPDAU	Level-2-260C-1 YEAR	-40 to 125	OADI
OPA357AIDBVR.A	Active	Production	SOT-23 (DBV) | 6	3000 | LARGE T&R	Yes	NIPDAU	Level-2-260C-1 YEAR	-40 to 125	OADI
OPA357AIDBVR.B	Active	Production	SOT-23 (DBV) | 6	3000 | LARGE T&R	Yes	NIPDAU	Level-2-260C-1 YEAR	-40 to 125	OADI
OPA357AIDBVR1G4	Last Time Buy	Production	SOT-23 (DBV) | 6	3000 | LARGE T&R	Yes	NIPDAU	Level-2-260C-1 YEAR	-40 to 125	OADI
OPA357AIDBVR1G4.A	Last Time Buy	Production	SOT-23 (DBV) | 6	3000 | LARGE T&R	Yes	NIPDAU	Level-2-260C-1 YEAR	-40 to 125	OADI
OPA357AIDBVR1G4.B	Last Time Buy	Production	SOT-23 (DBV) | 6	3000 | LARGE T&R	Yes	NIPDAU	Level-2-260C-1 YEAR	-40 to 125	OADI
OPA357AIDBVT	Active	Production	SOT-23 (DBV) | 6	250 | SMALL T&R	Yes	NIPDAU	Level-2-260C-1 YEAR	-40 to 125	OADI
OPA357AIDBVT.B	Active	Production	SOT-23 (DBV) | 6	250 | SMALL T&R	Yes	NIPDAU	Level-2-260C-1 YEAR	-40 to 125	OADI
OPA357AIDBVTG4	Active	Production	SOT-23 (DBV) | 6	250 | SMALL T&R	Yes	NIPDAU	Level-2-260C-1 YEAR	-40 to 125	OADI

(1) **Status:** For more details on status, see our product life cycle.

(2) **Material type:** When designated, preproduction parts are prototypes/experimental devices, and are not yet approved or released for full production. Testing and final process, including without limitation quality assurance, reliability performance testing, and/or process qualification, may not yet be complete, and this item is subject to further changes or possible discontinuation. If available for ordering, purchases will be subject to an additional waiver at checkout, and are intended for early internal evaluation purposes only. These items are sold without warranties of any kind.

(3) **RoHS values:** Yes, No, RoHS Exempt. See the TI RoHS Statement for additional information and value definition.

(4) **Lead finish/Ball material:** Parts may have multiple material finish options. Finish options are separated by a vertical ruled line. Lead finish/Ball material values may wrap to two lines if the finish value exceeds the maximum column width.

(5) **MSL rating/Peak reflow:** The moisture sensitivity level ratings and peak solder (reflow) temperatures. In the event that a part has multiple moisture sensitivity ratings, only the lowest level per JEDEC standards is shown. Refer to the shipping label for the actual reflow temperature that will be used to mount the part to the printed circuit board.

(6) **Part marking:** There may be an additional marking, which relates to the logo, the lot trace code information, or the environmental category of the part.

Multiple part markings will be inside parentheses. Only one part marking contained in parentheses and separated by a "~" will appear on a part. If a line is indented then it is a continuation of the previous line and the two combined represent the entire part marking for that device.

Important Information and Disclaimer: The information provided on this page represents TI's knowledge and belief as of the date that it is provided. TI bases its knowledge and belief on information provided by third parties, and makes no representation or warranty as to the accuracy of such information. Efforts are underway to better integrate information from third parties. TI has taken and continues to take reasonable steps to provide representative and accurate information but may not have conducted destructive testing or chemical analysis on incoming materials and chemicals. TI and TI suppliers consider certain information to be proprietary, and thus CAS numbers and other limited information may not be available for release.

In no event shall TI's liability arising out of such information exceed the total purchase price of the TI part(s) at issue in this document sold by TI to Customer on an annual basis.

TAPE AND REEL INFORMATION

REEL DIMENSIONS

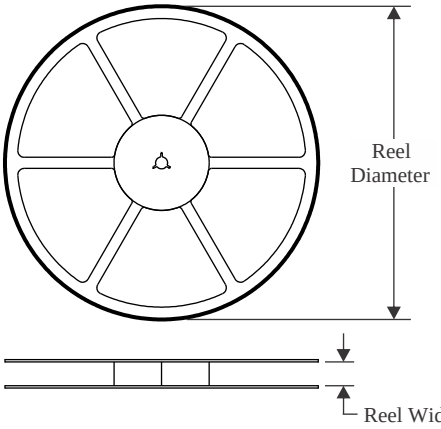

TAPE DIMENSIONS

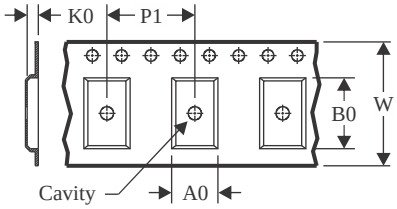

A0	Dimension designed to accommodate the component width
B0	Dimension designed to accommodate the component length
K0	Dimension designed to accommodate the component thickness
W	Overall width of the carrier tape
P1	Pitch between successive cavity centers

QUADRANT ASSIGNMENTS FOR PIN 1 ORIENTATION IN TAPE

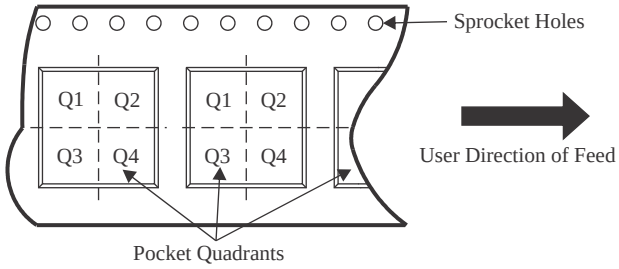

*All dimensions are nominal

Device	Package Type	Package Drawing	Pins	SPQ	Reel Diameter (mm)	Reel Width W1 (mm)	A0 (mm)	B0 (mm)	K0 (mm)	P1 (mm)	W (mm)	Pin1 Quadrant
OPA2357AIDGSR	VSSOP	DGS	10	2500	330.0	12.4	5.3	3.4	1.4	8.0	12.0	Q1
OPA2357AIDGST	VSSOP	DGS	10	250	180.0	12.4	5.3	3.4	1.4	8.0	12.0	Q1
OPA357AIDBVR	SOT-23	DBV	6	3000	178.0	9.0	3.23	3.17	1.37	4.0	8.0	Q3
OPA357AIDBVR1G4	SOT-23	DBV	6	3000	178.0	9.0	3.23	3.17	1.37	4.0	8.0	Q3
OPA357AIDBVT	SOT-23	DBV	6	250	179.0	8.4	3.2	3.2	1.4	4.0	8.0	Q3
OPA357AIDBVT	SOT-23	DBV	6	250	178.0	9.0	3.23	3.17	1.37	4.0	8.0	Q3

TAPE AND REEL BOX DIMENSIONS

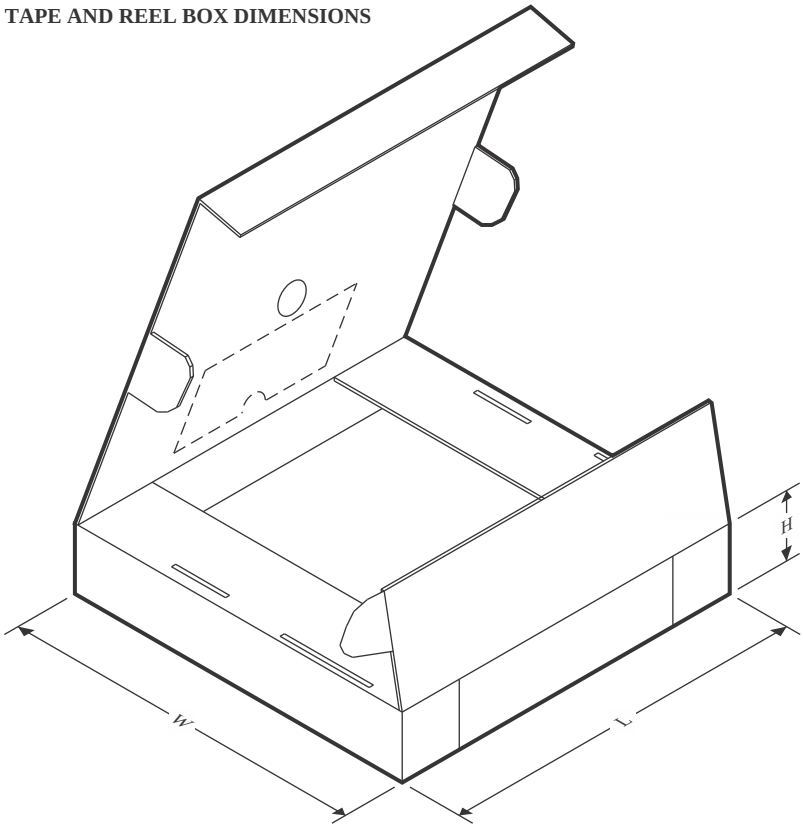

*All dimensions are nominal

Device	Package Type	Package Drawing	Pins	SPQ	Length (mm)	Width (mm)	Height (mm)
OPA2357AIDGSR	VSSOP	DGS	10	2500	353.0	353.0	32.0
OPA2357AIDGST	VSSOP	DGS	10	250	213.0	191.0	35.0
OPA357AIDBVR	SOT-23	DBV	6	3000	445.0	220.0	345.0
OPA357AIDBVR1G4	SOT-23	DBV	6	3000	445.0	220.0	345.0
OPA357AIDBVT	SOT-23	DBV	6	250	213.0	191.0	35.0
OPA357AIDBVT	SOT-23	DBV	6	250	445.0	220.0	345.0

PACKAGE OUTLINE

DGS0010A

VSSOP - 1.1 mm max height

SMALL OUTLINE PACKAGE

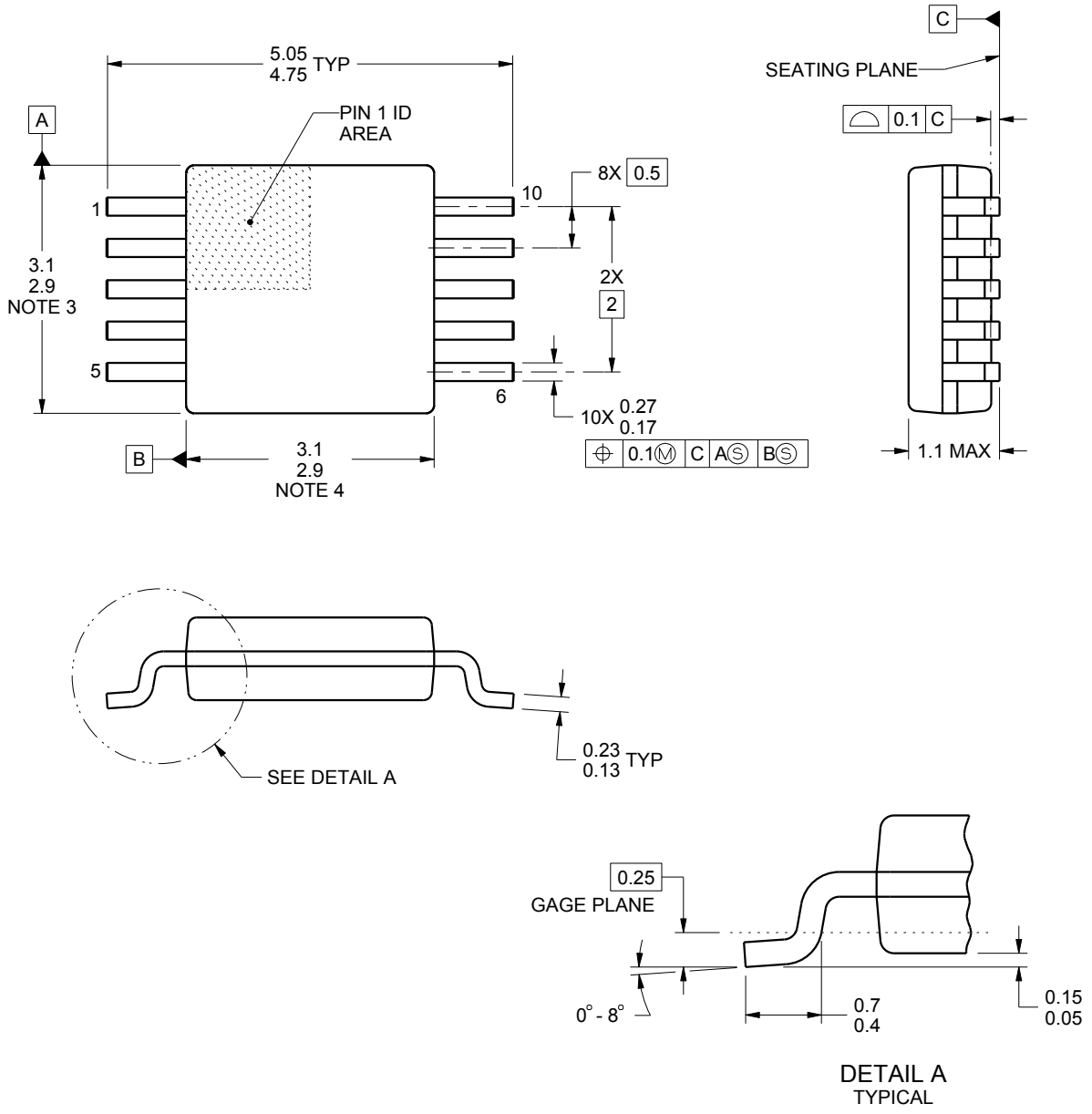

NOTES:

1. All linear dimensions are in millimeters. Any dimensions in parenthesis are for reference only. Dimensioning and tolerancing per ASME Y14.5M.
2. This drawing is subject to change without notice.
3. This dimension does not include mold flash, protrusions, or gate burrs. Mold flash, protrusions, or gate burrs shall not exceed 0.15 mm per side.
4. This dimension does not include interlead flash. Interlead flash shall not exceed 0.25 mm per side.
5. Reference JEDEC registration MO-187, variation BA.

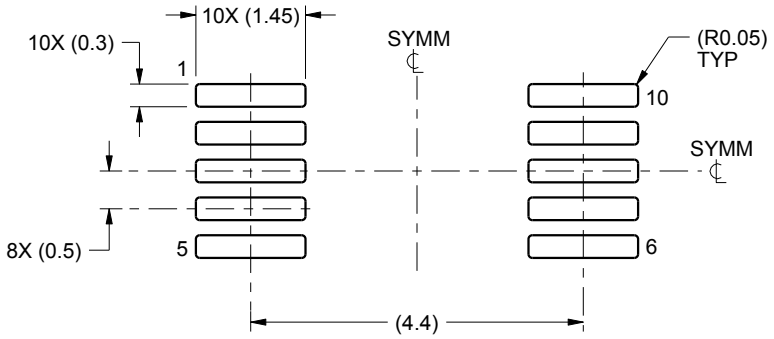

LAND PATTERN EXAMPLE
SCALE:10X

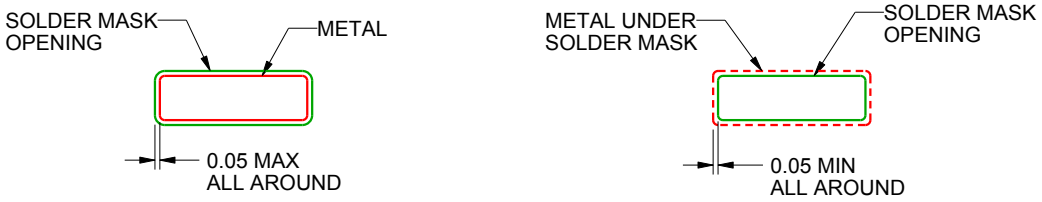

SOLDER MASK DETAILS
NOT TO SCALE

4221984/A 05/2015

NOTES: (continued)

6. Publication IPC-7351 may have alternate designs.
7. Solder mask tolerances between and around signal pads can vary based on board fabrication site.

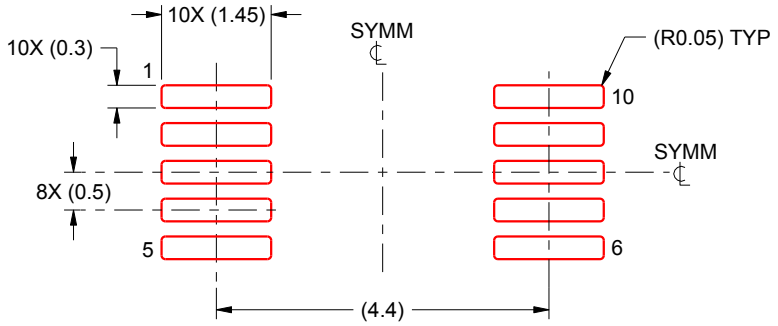

SOLDER PASTE EXAMPLE
BASED ON 0.125 mm THICK STENCIL
SCALE:10X

4221984/A 05/2015

NOTES: (continued)

8. Laser cutting apertures with trapezoidal walls and rounded corners may offer better paste release. IPC-7525 may have alternate design recommendations.
9. Board assembly site may have different recommendations for stencil design.

PACKAGE OUTLINE

DBV0006A

SOT-23 - 1.45 mm max height

SMALL OUTLINE TRANSISTOR

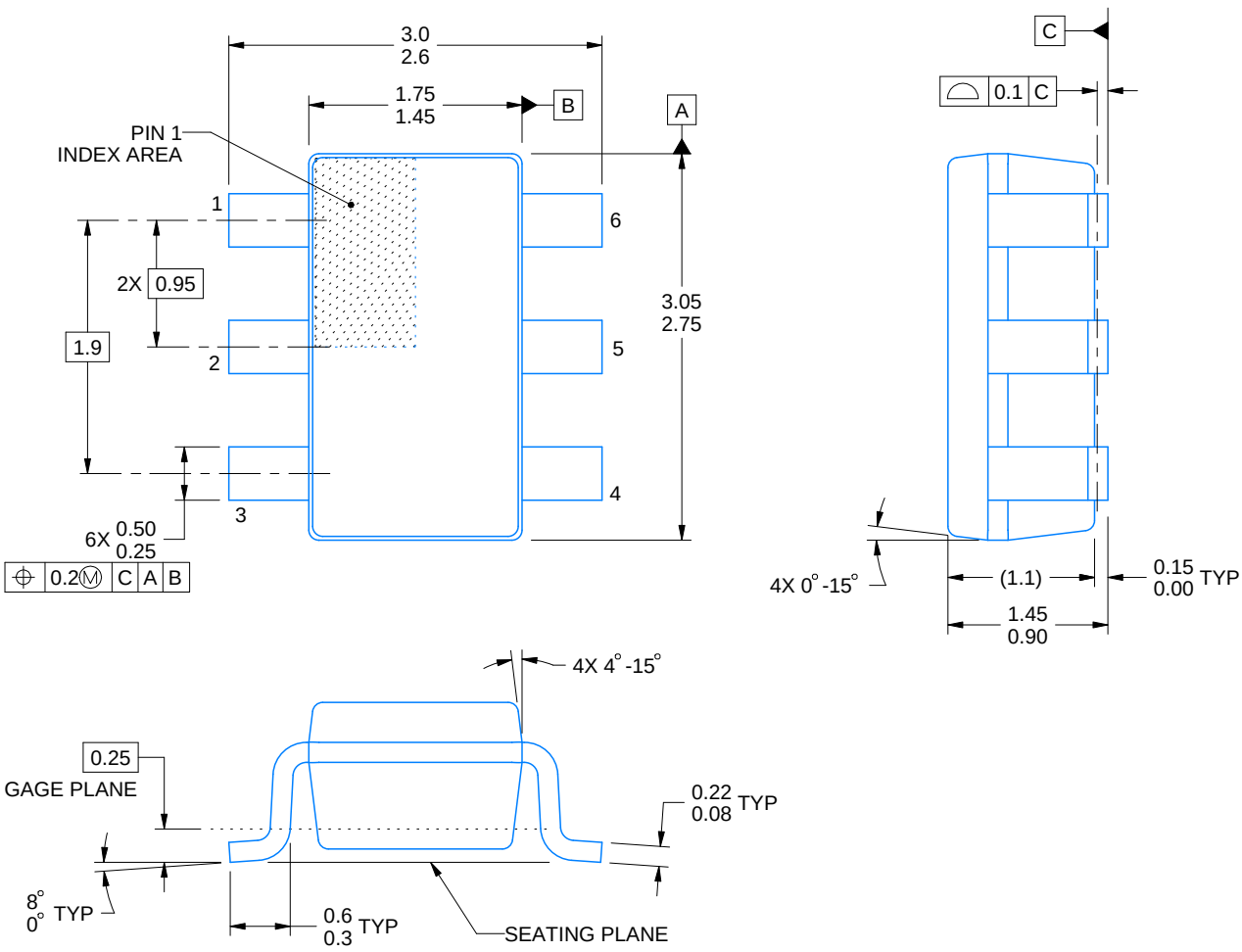

4214840/G 08/2024

NOTES:

1. All linear dimensions are in millimeters. Any dimensions in parenthesis are for reference only. Dimensioning and tolerancing per ASME Y14.5M.
2. This drawing is subject to change without notice.
3. Body dimensions do not include mold flash or protrusion. Mold flash and protrusion shall not exceed 0.25 per side.
4. Leads 1,2,3 may be wider than leads 4,5,6 for package orientation.
5. Refernce JEDEC MO-178.

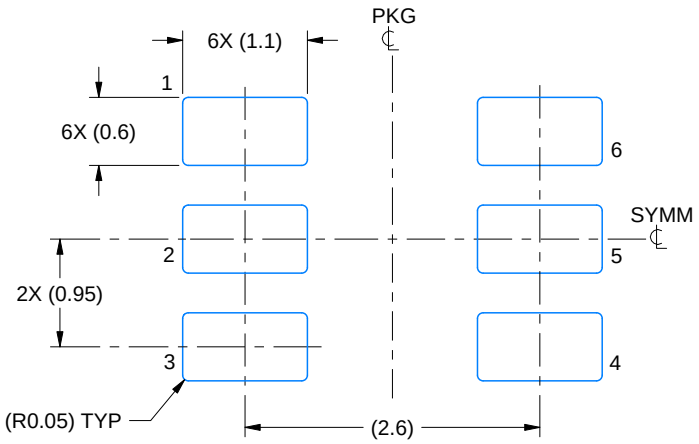

LAND PATTERN EXAMPLE
EXPOSED METAL SHOWN
SCALE:15X

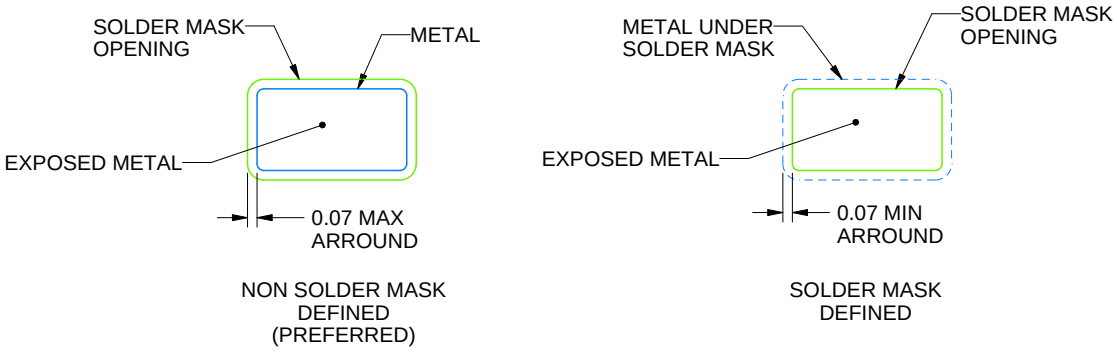

SOLDER MASK DETAILS

4214840/G 08/2024

NOTES: (continued)

6. Publication IPC-7351 may have alternate designs.
7. Solder mask tolerances between and around signal pads can vary based on board fabrication site.

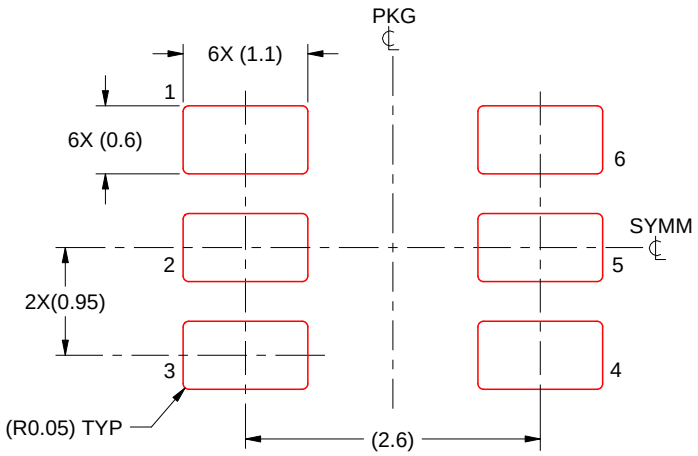

SOLDER PASTE EXAMPLE
BASED ON 0.125 mm THICK STENCIL
SCALE:15X

4214840/G 08/2024

NOTES: (continued)

8. Laser cutting apertures with trapezoidal walls and rounded corners may offer better paste release. IPC-7525 may have alternate design recommendations.
9. Board assembly site may have different recommendations for stencil design.

IMPORTANT NOTICE AND DISCLAIMER

TI PROVIDES TECHNICAL AND RELIABILITY DATA (INCLUDING DATASHEETS), DESIGN RESOURCES (INCLUDING REFERENCE DESIGNS), APPLICATION OR OTHER DESIGN ADVICE, WEB TOOLS, SAFETY INFORMATION, AND OTHER RESOURCES “AS IS” AND WITH ALL FAULTS, AND DISCLAIMS ALL WARRANTIES, EXPRESS AND IMPLIED, INCLUDING WITHOUT LIMITATION ANY IMPLIED WARRANTIES OF MERCHANTABILITY, FITNESS FOR A PARTICULAR PURPOSE OR NON-INFRINGEMENT OF THIRD PARTY INTELLECTUAL PROPERTY RIGHTS.

These resources are intended for skilled developers designing with TI products. You are solely responsible for (1) selecting the appropriate TI products for your application, (2) designing, validating and testing your application, and (3) ensuring your application meets applicable standards, and any other safety, security, regulatory or other requirements.

These resources are subject to change without notice. TI grants you permission to use these resources only for development of an application that uses the TI products described in the resource. Other reproduction and display of these resources is prohibited. No license is granted to any other TI intellectual property right or to any third party intellectual property right. TI disclaims responsibility for, and you fully indemnify TI and its representatives against any claims, damages, costs, losses, and liabilities arising out of your use of these resources.

TI’s products are provided subject to TI’s Terms of Sale, TI’s General Quality Guidelines, or other applicable terms available either on ti.com or provided in conjunction with such TI products. TI’s provision of these resources does not expand or otherwise alter TI’s applicable warranties or warranty disclaimers for TI products. Unless TI explicitly designates a product as custom or customer-specified, TI products are standard, catalog, general purpose devices.

TI objects to and rejects any additional or different terms you may propose.

Copyright © 2026, Texas Instruments Incorporated

Last updated 10/2025