OPT4041 High Speed, Dual-Channel, High Precision, Digital Ambient Light Sensor

1 Features

- High precision, high speed light-to-digital conversion over high speed I²C interface
- Visible channel:
  - Precision optical filtering to closely match human eye with excellent near infrared (IR) rejection
  - 28 bits of effective dynamic range: 585µlux to 157klux
- Wide band channel:
  - Responsive to a wide range of wavelengths, including NIR
  - 26 bits of effective dynamic range: 192.3pW/cm² to 12.91mW/cm²
- Semi-logarithmic output:
  - 9 (visible channel) and 7 (WB channel) binary logarithmic full-scale light ranges
  - Highly linear response within each range
- Built-in automatic full-scale light range selection logic that switches measurement range based on input light condition for best possible resolution at all times
- 12 configurable conversion times:
  - 600µs to 800ms per channel for high-speed and high-precision applications
- External pin interrupt for hardware synchronized trigger and interrupts
- Internal FIFO on output registers with I²C burst readout
- Low operating current: 30µA
  with ultra-low power standby: 2µA
- Operating temperature range: –40°C to +85°C
- Wide power-supply range: 1.6V to 3.6V
- 5.5V Tolerant I/O pins
- Selectable I²C address
- Small-form factor:
  - 2.1mm × 1.9mm × 0.6mm SOT-5X3 package

2 Applications

- IP Network Cameras
- Video doorbell
- Analog Security Camera
- Door & Window Sensor

Package Information

PART NUMBER	PACKAGE(1)	PACKAGE SIZE(2)
OPT4041	SOT-5X3 (8)	2.1mm × 1.9mm × 0.6mm

(1) For more information, see Section 11.
(2) The package size (length × width) is a nominal value and includes pins, where applicable.

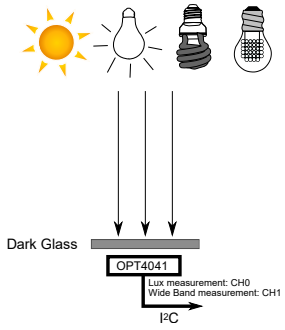

Typical Application Diagram of OPT4041

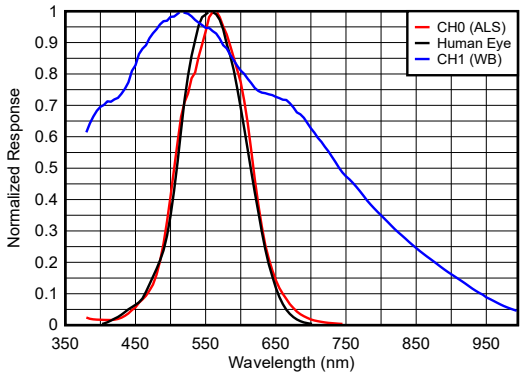

Spectral Response: The OPT4041 and Human Eye

An IMPORTANT NOTICE at the end of this data sheet addresses availability, warranty, changes, use in safety-critical applications, intellectual property matters and other important disclaimers. PRODUCTION DATA.

3 Description

The OPT4041 is a light-to-digital sensor (single chip lux meter) that measures the intensity of visible light in two independent channels. The spectral response of the ALS channel tightly matches the photopic response of the human eye, where as the spectral response of the WB channel is wide and measures a broad spectrum of light. A specially engineered filter on the ALS channel rejects near-infrared component from common light sources to measure accurate light intensity. The output of the OPT4041 is semi-logarithmic with binary logarithmic full-scale light ranges along with a highly linear response within each range. The visible channel provides nine binary light ranges, providing measurement capability from 585µlux to 157klux and 28 bits of effective dynamic range. The wide band channel provides seven light ranges, providing measurement capability from 192.3pW/cm^2 to 12.91mW/cm^2 and 26 bits of effective dynamic range. The built-in automatic range selection logic dynamically adjusts the device gain settings based on the light level, providing the best possible resolution in all conditions without user input.

The OPT4041 is equipped with engineered optical filters on both channels, providing strong out-of-band rejection. Strong infrared rejection on the visible channel aids in maintaining high lux accuracy across all light sources, especially when the sensor is placed under dark glass for aesthetic reasons. The WB channel provides a wide spectrum response helping measure a wide range of spectral content including NIR wavelengths 850nm and 940nm.

The OPT4041 is designed for systems that require light level detection to enhance user experience and typically replaces low-accuracy photodiodes, photoresistors, and other ambient light sensors with underwhelming human eye matching and near-infrared rejection.

The OPT4041 device can be configured to operate with light conversion times from 600µs to 800ms per channel in 12 steps, providing system flexibility based on application need. Conversion time includes the light integration time and analog-to-digital (ADC) conversion time. Measurement resolution is determined by a combination of light intensity and integration time, effectively providing the capability to measure down to 585µlux of light intensity changes.

Digital operation is flexible for system integration. Measurements can be either continuous or triggered in one shot with register writes or a hardware pin. The device features a threshold detection logic, which allows the processor to sleep while the sensor waits for an appropriate wake-up event to report through the interrupt pin.

The sensor reports a digital output representing the light level over an I2C- and SMBus-compatible, two-wire serial interface. An internal first-in-first-out (FIFO) on the output registers is available to read out measurements from the sensor at a slower pace while still preserving all data captured by the device. The OPT4041 also supports I^{2}C burst mode, thus helping the host read data from the FIFO with minimal I^{2}C overhead.

The low power consumption and low power-supply voltage capability of the OPT4041 helps enhance the battery life of battery-powered systems.

Copyright © 2024 Texas Instruments Incorporated

Table of Contents

1 Features....1
2 Applications....1
3 Description....2
4 Pin Configuration and Functions....4
5 Specifications....5
5.1 Absolute Maximum Ratings....5
5.2 ESD Ratings....5
5.3 Recommended Operating Conditions....5
5.4 Thermal Information....5
5.5 Electrical Characteristics....6
5.6 I^2C Interface Timing Requirements....8
5.7 I^2C Timing Diagram....8
5.8 Typical Characteristics....9
6 Detailed Description....11
6.1 Overview....11
6.2 Functional Block Diagram....11
6.3 Feature Description....12
6.4 Device Functional Modes....13
6.5 Programming....21
7 Register Maps....25
7.1 Register Descriptions....26
8 Application and Implementation....35
8.1 Application Information....35
8.2 Typical Application....35
8.3 Best Design Practices....37
8.4 Power Supply Recommendations....37
8.5 Layout....37
9 Device and Documentation Support....40
9.1 Documentation Support....40
9.2 Receiving Notification of Documentation Updates....40
9.3 Support Resources....40
9.4 Trademarks....40
9.5 Electrostatic Discharge Caution....40
9.6 Glossary....40
10 Revision History....40
11 Mechanical, Packaging, and Orderable Information....40
11.1 Mechanical Data....41
11.2 Package Option Addendum....44
11.3 Tape and Reel Information....45

Copyright © 2024 Texas Instruments Incorporated

4 Pin Configuration and Functions

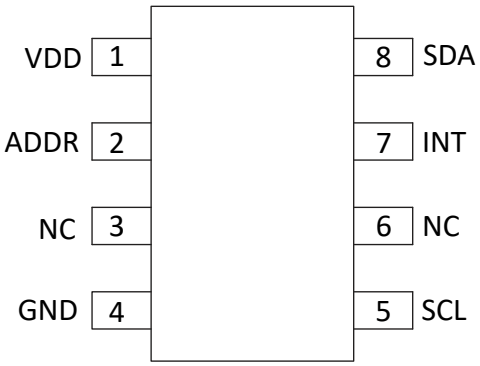

Figure 4-1. DTS Package, 8-Pin SOT 5X3, Top View

Table 4-1. Pin Functions

PIN		TYPE	DESCRIPTION
NO.	NAME		
1	VDD	Power	Device power. Connect to a 1.6V to 3.6V supply.
2	ADDR	Digital input	Address pin. This pin sets the LSBs of the I^2C address.
3	NC	No Connection	No Connection
4	GND	Power	Ground
5	SCL	Digital input	I^2C clock. Connect with a 10kΩ resistor to a 1.6V to 5.5V supply.
6	NC	No Connection	No Connection
7	INT	Digital I/O	Interrupt input/output open-drain. Connect with a 10kΩ resistor to a 1.6V to 5.5V supply.
8	SDA	Digital I/O	I^2C data. Connect with a 10kΩ resistor to a 1.6V to 5.5V supply.

Copyright © 2024 Texas Instruments Incorporated

5 Specifications

5.1 Absolute Maximum Ratings

over operating free-air temperature range (unless otherwise noted)(1)

		MIN	MAX	UNIT
Voltage	VDD to GND	–0.5	6	V
	SDA and SCL to GND	–0.5	6	V
Current in to any pin			10	mA
T_J	Junction temperature		150	°C
T_{stg}	Storage temperature	–65	150(2)	°C

(1) Operation outside the Absolute Maximum Ratings may cause permanent device damage. Absolute Maximum Ratings do not imply functional operation of the device at these or any other conditions beyond those listed under Recommended Operating Conditions. If used outside the Recommended Operating Conditions but within the Absolute Maximum Ratings, the device may not be fully functional, and this may affect device reliability, functionality, performance, and shorten the device lifetime.
(2) Long exposure to temperatures higher than 105°C can cause package discoloration, spectral distortion, and measurement inaccuracy.

5.2 ESD Ratings

			VALUE	UNIT
$V_{(ESD)}$	Electrostatic discharge	Human body model (HBM), per ANSI/ESDA/JEDEC JS-001, all pins(1)	±2000	V
		Charged device model (CDM), per ANSI/ESDA/JEDEC JS-002, all pins(2)	±500	

(1) JEDEC document JEP155 states that 500V HBM allows safe manufacturing with a standard ESD control process.
(2) JEDEC document JEP157 states that 250V CDM allows safe manufacturing with a standard ESD control process.

5.3 Recommended Operating Conditions

over operating free-air temperature range (unless otherwise noted)

		MIN	NOM	MAX	UNIT
VDD	Supply voltage	1.6		3.6	V
T_J	Junction temperature	–40		85	°C

5.4 Thermal Information

THERMAL METRIC(1)		OPT4041 SOT-5X3 (DTS) 8 Pins	UNIT
$R_{\theta JA}$	Junction-to-ambient thermal resistance	112.2	°C/W
$R_{\theta JC(top)}$	Junction-to-case (top) thermal resistance	28.4	°C/W
$R_{\theta JB}$	Junction-to-board thermal resistance	22.1	°C/W
Ψ_{JT}	Junction-to-top characterization parameter	1.2	°C/W
Ψ_{JB}	Junction-to-board characterization parameter	22	°C/W

(1) For more information about traditional and new thermal metrics, see the Semiconductor and IC Package Thermal Metrics application note.

Copyright © 2024 Texas Instruments Incorporated

5.5 Electrical Characteristics

All specifications at TA = 25°C, VDD = 3.3V, 800ms conversion-time (CONVERSION_TIME=0xB), automatic full-scale range, white LED and normal-angle incidence of light, unless otherwise specified.

PARAMETER		TEST CONDITIONS	MIN	TYP	MAX	UNIT
OPTICAL						
	Number of channels			2		
	Peak irradiance spectral responsivity	CH0 (ALS)		561		nm
		CH1 (WB)		518		nm
	ADC resolution		9		20	bits
	Range determination	CH0 (ALS)		4		bits
		CH1 (WB)		3		bits
Tconv	Light Conversion-time per channel(4)	Conversion-time CT = 0x6		25		ms
		Conversion-time CT = 0xB		800		ms
E_{vLSB}	Equivalent resolution CH0 (ALS)	Lowest auto gain range, 800ms conversion-time per channel		585		µlux
		Lowest auto gain range, 100ms conversion-time per channel		4.68		mlux
	Equivalent resolution CH1 (IR)	Lowest auto gain range, 800ms conversion-time per channel, 520nm stimulus		0.1923		nW/cm^2
		Lowest auto gain range, 100ms conversion-time per channel, 520nm stimulus		1.538		nW/cm^2
	Peak responsitivity	CH0 (ALS) Lowest auto gain range, 800ms conversion per channel		11400		codes per $µW/cm^2$
		CH1 (WB) Lowest auto gain range, 800ms conversion per channel		5200		codes per $µW/cm^2$
E_{vFS}	Full-scale Illuminance	CH0 (ALS)		157035		lux
		CH1 (WB)		12.91		mW/cm^2
E_v	Measurement output result for ALS Channel (CH0)	2000 lux input(1)	1800	2000	2200	lux
	Relative accuracy between gain ranges (2)	All channels		0.6		%
E_{vIR}	Infrared response	850-nm near infrared, CH0 (ALS) response		0.2		%
	Light source variation for lux measurement (incandescent, halogen, fluorescent)	Bare device, no cover glass		4		%
	Linearity	EXPONENT_CHx > 0, 100ms conversion-time CT=8, all channels		2		%
		EXPONENT_CHx = 0, 100ms conversion-time CT=8, all channels		5		%
	Drift across temperature	All channels		0.01		%/°C
	Dark Measurement	All channels		0	10	codes
	Angular response (FWHM)	CH0 (ALS)		121		°
		CH1 (WB)		128		°
PSRR	Power-supply rejection ratio(3)	VDD at 3.6V and 1.6V, all channels		0.1		%/V
POWER SUPPLY						
V_{DD}	Power supply		1.6		3.6	V
V_{I2C}	Power supply for I^2C pull up resistor	I^2C pullup resistor, $V_{DD} \leq V_{I2C}$	1.6		5.5	V

Copyright © 2024 Texas Instruments Incorporated

All specifications at TA = 25°C, VDD = 3.3V, 800ms conversion-time (CONVERSION_TIME=0xB), automatic full-scale range, white LED and normal-angle incidence of light, unless otherwise specified.

PARAMETER		TEST CONDITIONS	MIN	TYP	MAX	UNIT
$I_{QACTIVE}$	Active Current	Dark		24		µA
		Full-scale lux		29		µA
I_Q	Quiescent current	Dark		2		µA
		Full-scale lux		2.6		µA
POR	Power-on-reset threshold			0.8		V
DIGITAL						
C_{IO}	I/O Pin Capacitance			3		pF
T_{ss}	Trigger to Sample Start	Low-power shutdown mode		0.5		ms
V_{IL}	Low-level input voltage (SDA, SCL, and ADDR)		0		0.3 X V_{DD}	V
V_{IH}	High-level input voltage (SDA, SCL, and ADDR)		0.7 X V_{DD}		5.5	V
I_{IL}	Low-level input current (SDA, SCL, and ADDR)			0.01	0.25(5)	µA
V_{OL}	Low-level output voltage (SDA and INT)	I_{OL}=3mA			0.32	V
I_{ZH}	Output logic high, high-Z leakage current (SDA, INT)	Measured with V_{DD} at pin		0.01	0.25(5)	µA
TEMPERATURE						
	Specified temperature range		–40		85	°C

(1) Tested with the white LED calibrated to 2000lux
(2) Characterized by measuring fixed near-full-scale light levels on the higher adjacent full-scale range setting.
(3) PSRR is the percent change of the measured lux output from its current value, divided by the change in power supply voltage, as characterized by results from 3.6V and 1.6V power supplies
(4) The conversion-time, from start of conversion until the data are ready to be read, is the integration-time plus analog-to-digital conversion-time.
(5) The specified leakage current is dominated by the production test equipment limitations. Typical values are much smaller

Copyright © 2024 Texas Instruments Incorporated

5.6 I²C Interface Timing Requirements

All timing parameters are referenced to low and high voltage thresholds of 30% and 70%, respectively, of the final settled value.

		MIN	TYP	MAX	UNIT
I²C FAST MODE					
f_{SCL}	Clock operating frequency	0.01		0.4	MHz
t_{BUF}	Bus free time between stop and start	1300			ns
t_{HDSTA}	Hold time after repeated start	600			ns
t_{SUSTA}	Setup time for repeated start	600			ns
t_{SUSTO}	Setup time for stop	600			ns
t_{HDDAT}	Data hold time	20		900	ns
t_{SUDAT}	Data setup time	100			ns
t_{LOW}	Clock low period	1300			ns
t_{HIGH}	Clock high period	600			ns
t_{RC} and t_{FC}	Clock rise and fall time			300	ns
t_{RD} and t_{FD}	Data rise and fall time			300	ns
t_{TIMEO}	Bus timeout period. If the clock line is held low for this duration of time, the bus state machine is reset.		28		ms
I²C HIGH-SPEED MODE					
f_{SCL}	Clock operating frequency	0.01		2.6	MHz
t_{BUF}	Bus free time between stop and start	160			ns
t_{HDSTA}	Hold time after repeated start	160			ns
t_{SUSTA}	Setup time for repeated start	160			ns
t_{SUSTO}	Setup time for stop	160			ns
t_{HDDAT}	Data hold time	20		140	ns
t_{SUDAT}	Data setup time	20			ns
t_{LOW}	Clock low period	240			ns
t_{HIGH}	Clock high period	60			ns
t_{RC} and t_{FC}	Clock rise and fall time			40	ns
t_{RD} and t_{FD}	Data rise and fall time			80	ns
t_{TIMEO}	Bus timeout period. If the clock line is held low for this duration of time, the bus state machine is reset.		28		ms

5.7 I²C Timing Diagram

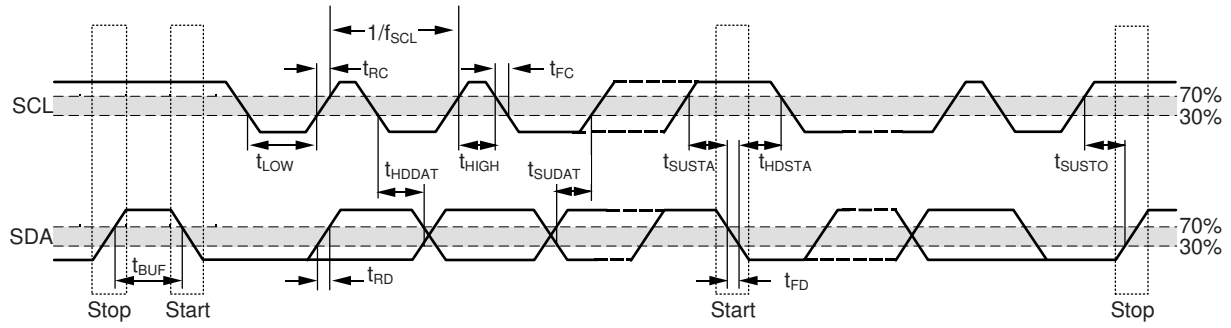

Figure 5-1. I²C Detailed Timing Diagram

Copyright © 2024 Texas Instruments Incorporated

5.8 Typical Characteristics

At T_A = 25°C, V_{DD} = 3.3V, 800ms conversion time (CONVERSION_TIME = 0xB), automatic full-scale range (RANGE = 0xC), white LED, and normal-angle incidence of light, unless otherwise specified.

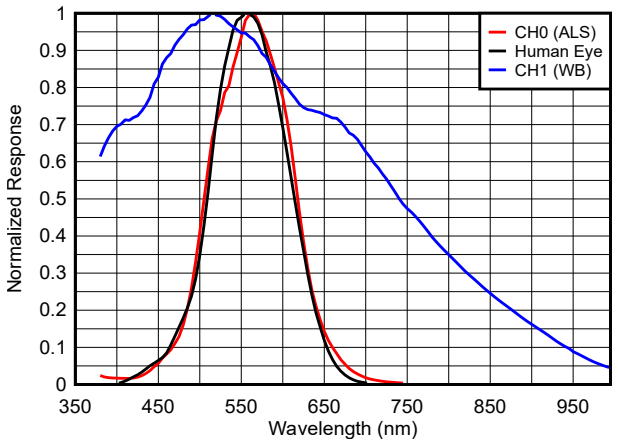

Figure 5-2. Spectral Response vs Wavelength

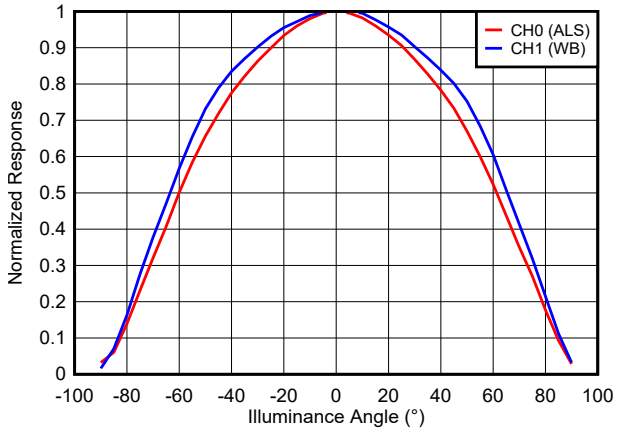

Figure 5-3. Device Response vs Illuminance Angle

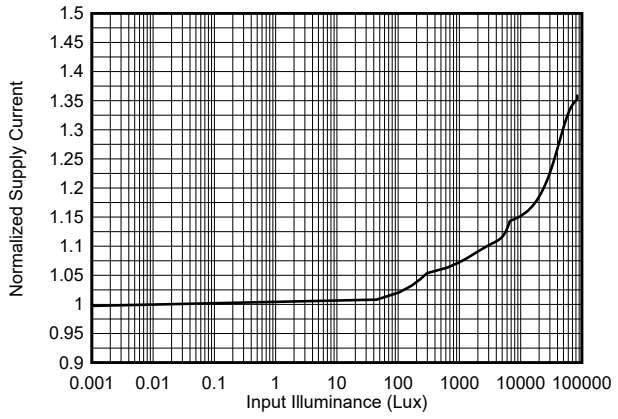

Normalized to dark condition

Figure 5-4. Active Current vs Input Light Level

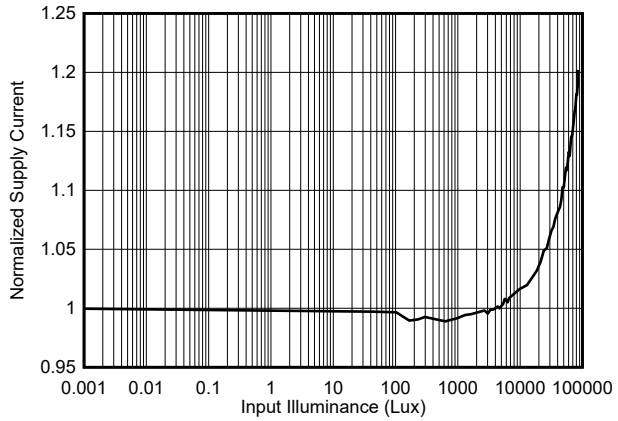

Normalized to dark condition

Figure 5-5. Standby Current vs Input Light Level

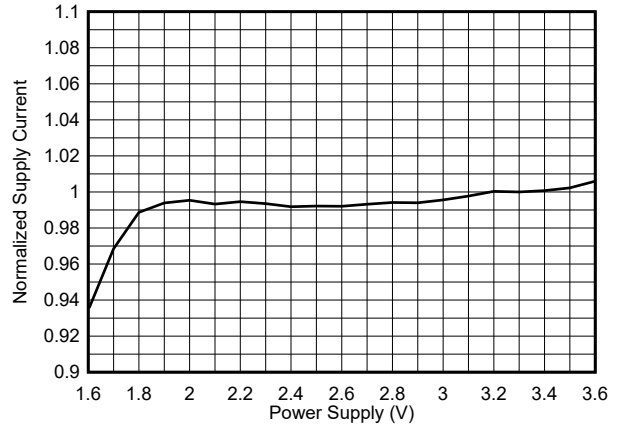

Normalized to 3.3V

Figure 5-6. Active Current vs Power Supply

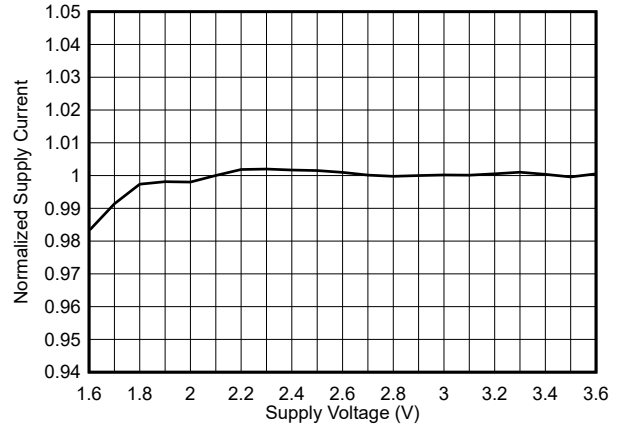

Normalized to 3.3 V

Figure 5-7. Standby Current vs Power Supply

Copyright © 2024 Texas Instruments Incorporated

5.8 Typical Characteristics (continued)

At T_A = 25°C, V_{DD} = 3.3V, 800ms conversion time (CONVERSION_TIME = 0xB), automatic full-scale range (RANGE = 0xC), white LED, and normal-angle incidence of light, unless otherwise specified.

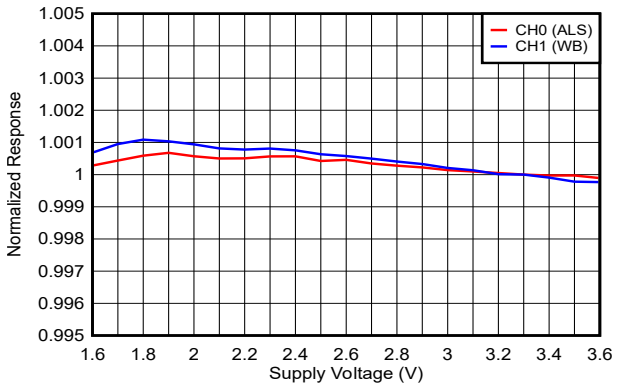

Normalized to 3.3 V

Figure 5-8. Device Response vs Power Supply

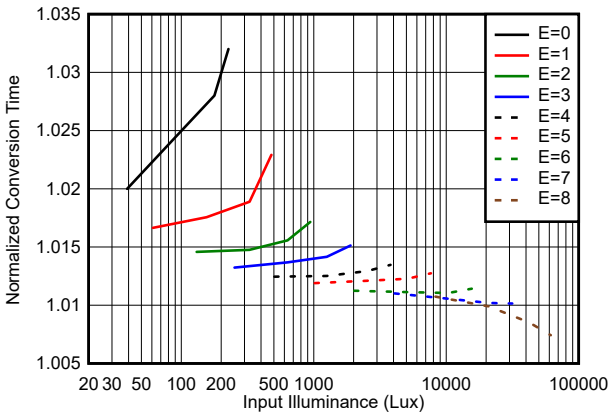

Register E (exponent) denotes the full-scale range

Normalized to 25 ms

Figure 5-9. Conversion Time at 25 ms vs Input Light Level

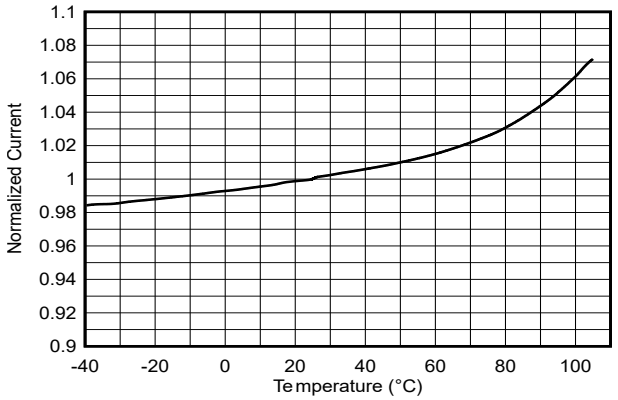

Normalized to 25°C

Figure 5-10. Active Current vs Temperature

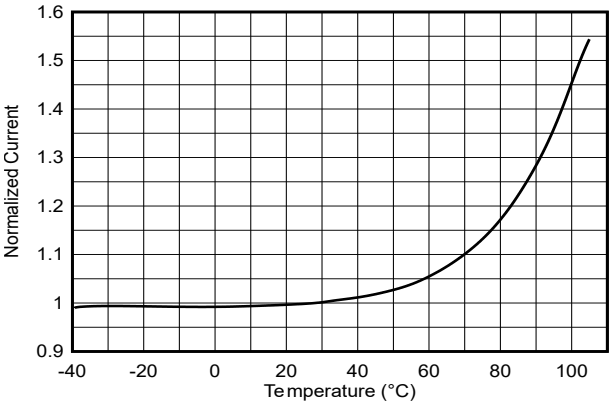

Normalized to 25°C

Figure 5-11. Standby Current vs Temperature

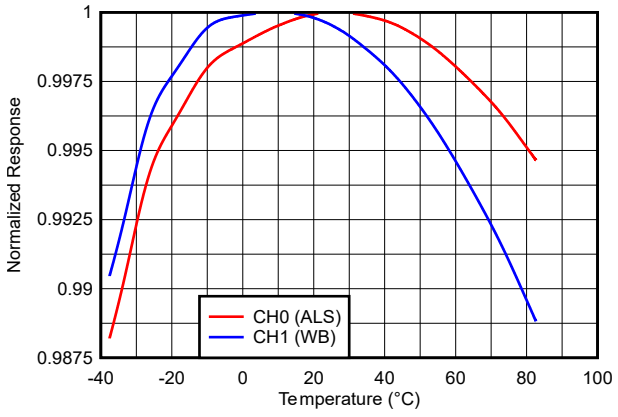

White LED

Figure 5-12. Device Response vs Temperature

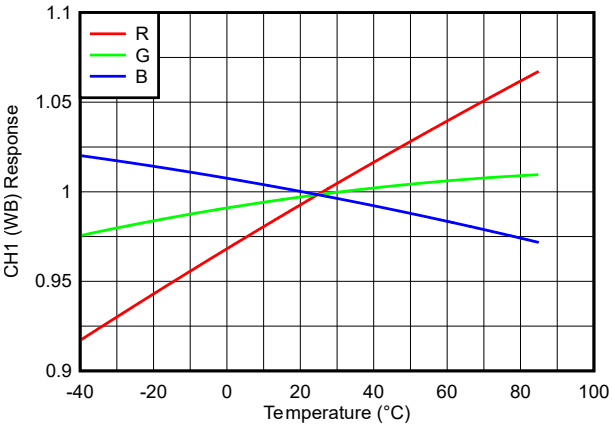

Figure 5-13. Channel 1 RGB Response vs Temperature

Copyright © 2024 Texas Instruments Incorporated

6 Detailed Description

6.1 Overview

OPT4041 measures the ambient light that illuminates the device. This device measures light with a spectral response very closely matched to the human eye, and with excellent infrared rejection.

Matching the sensor spectral response to that of the human eye response is vital because ambient light sensors are used to measure and help create ideal human lighting experiences. Strong rejection of infrared light, which a human does not see, is a crucial component of this matching. This matching makes the OPT4041 especially good for operation underneath windows that are visibly dark, but infrared transmissive.

The wide band channel is sensitive to a broad range of wavelengths, including 850nm and 940nm NIR wavelengths. This enables accurate measurement of a wide range of sources.

OPT4041 is fully self-contained to measure the ambient light and report the result in ADC codes directly proportional to lux digitally over the I^2C bus. The result can also be used to alert a system and interrupt a processor with the INT pin. The result can also be summarized with a programmable threshold comparison and communicated with the INT pin.

OPT4041 is by default configured to operate in automatic full-scale range detection mode that always selects the optimal full-scale range setting for the given lighting conditions. There are 9 full-scale range settings one of which can be selected manually as well. Setting the device to operate in automatic full-scale range detection mode frees the user from having to program the software for potential iterative cycles of measurement and readjustment of the full-scale range until optimal for any given measurement. With device exhibiting excellent linearity over the entire 28 bit dynamic range of measurement no additional linearity calibration is required at system level.

OPT4041 can be configured to operate in continuous or one-shot measurement modes. The device offers 12 conversion times ranging from 600µs to 800ms. The device starts up in a low-power shutdown state, such that the OPT4041 only consumes active-operation power after being programmed into an active state.

OPT4041 optical filtering system is not excessively sensitive to non-ideal particles and micro-shadows on the optical surface. This reduced sensitivity is a result of the relatively minor device dependency on uniform density optical illumination of the sensor area for infrared rejection. Proper optical surface cleanliness is always recommended for best results on all optical devices.

6.2 Functional Block Diagram

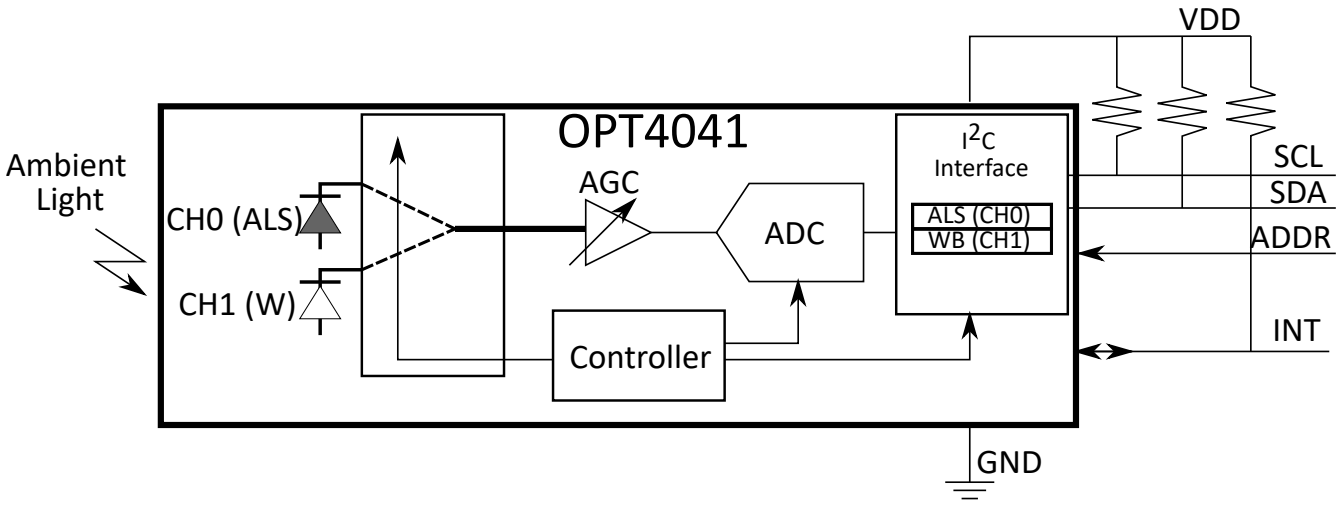

Figure 6-1. Functional Block Diagram of OPT4041

Copyright © 2024 Texas Instruments Incorporated

6.3 Feature Description

6.3.1 Spectral Response

6.3.1.1 Channel 0: Human Eye Matching

The OPT4041 spectral response closely matches that of the human eye. If the ambient light sensor measurement is used to help create a good human experience, or create optical conditions that are optimal for a human, the sensor must measure the same spectrum of light that a human sees.

The OPT4041 also has excellent infrared light (IR) rejection. This IR rejection is especially important because many real-world lighting sources have significant infrared content that humans do not see. If the sensor measures infrared light that the human eye does not see, then a true human experience is not accurately represented.

If the application demands hiding the OPT4041 underneath a dark window (such that the end-product user cannot see the sensor) the infrared rejection of the OPT4041 becomes significantly more important because many dark windows attenuate visible light but transmit infrared light. This attenuation of visible light and lack of attenuation of IR light amplifies the ratio of the infrared light to visible light that illuminates the sensor. Results can still be well matched to the human eye under this condition because of the high infrared rejection of the OPT4041.

6.3.1.2 Channel 1: Wide Band

Channel 1 of the OPT4041 has a wide spectral bandwidth, ranging from 380nm to 1000nm. The wide band channel enables the OPT4041 to perform measurements in applications with a variety of wavelengths, and the NIR response can be useful for monitoring IR LEDs or performing overall system calibrations. For example, the channel 1 NIR measurements can be used in systems where fast calibration of camera exposure settings is required.

6.3.2 Automatic Full-Scale Range Setting

The OPT4041 has an automatic full-scale range setting feature that eliminates the need to predict and set the optimal range for the device. In this mode, the device automatically selects the optimal full-scale range for varying lighting condition each measurement. The device has a high degree of result matching between the full-scale range settings. This matching eliminates the problem of varying results or the need for range-specific, user-calibrated gain factors when different full-scale ranges are chosen.

6.3.3 Output Register CRC and Counter

The OPT4041 device features additional bits as part of the output register which helps in improving the reliability of light measurements for the application.

6.3.3.1 Output Sample Counter

The OPT4041 device features COUNTER registers as part of the output registers for both channels which increment for every successful measurement. These registers can be read as part of the output registers which helps the application to keep track of measurements. The 4 bit counter starts at 0 on power-up and counts up to 15 after which the counter resets back to 0 and continues to count up. This is particularly helpful in situations such as the following:

- Host or Controller needs consecutive measurements. Utilizing the COUNTER registers, the controller can compare samples and verifies that the samples are in expected order without missing intermediate counter values.
- As a safety feature when the light level is not changing, the controller can verify that the measurements from OPT4041 are not stuck by comparing values of the COUNTER registers between measurements. If the COUNTER values continue to change over samples, the device updates the output register with the most recent measurement of light levels.

Copyright © 2024 Texas Instruments Incorporated

6.3.3.2 Output CRC

The CRC register consists of Cyclic Redundancy Checker bits as part of the output registers calculated within the OPT4041 device and is updated on every measurement. This feature helps in detecting communication related bit errors during the output readout from the device. Register 1h lists the calculation method for the CRC bits, which can be independently verified in the controller or host firmware and software to validate if communication between the controller and the device is successful without bit errors during transmission.

6.3.4 Threshold Detection

OPT4041 features a threshold detection logic which can be programmed to indicate and update register flags if measured light levels cross thresholds set by the user. The threshold condition can be programmed to use one of the two channels as a trigger, as determined by the THRESHOLD_CH_SEL register. There are independent low and high threshold target registers with independent flag registers to indicate the status of measured light level. Measured light levels reaching below the low threshold and above the high threshold are called faults. Users can program a fault count register, which counts consecutive number of faults before the flag registers are set. This is particularly useful in cases where the controller can read the flag register alone to get an indication of the measured light level without needing to perform lux calculations. Calculations for setting up the threshold are available in the Section 6.4.6 section.

6.4 Device Functional Modes

6.4.1 Modes of Operation

The OPT4041 has the following modes of operation:

- **Power-down mode:** This mode is a power-down or standby mode where the device enters a low-power state. There is no active light sensing or conversion in this mode. The device still responds to I^2C transactions that can be used to bring the device out of this mode. The OPERATING_MODE register is set to 0.
- **Continuous mode:** In this mode, the OPT4041 measures and updates the output registers continuously as determined by the conversion time and generates a hardware interrupt on the INT pin for every successful conversion. Configure the INT pin in output mode using the INT_DIR register. The device active circuits are continuously kept active to minimize the interval between measurements. The OPERATING_MODE register is set to 3.
- **One-shot mode:** There are two ways in which the OPT4041 can be used in one-shot mode of operation with one common theme where the OPT4041 stays in standby mode and a conversion is triggered either by a register write to the configuration register or by a hardware interrupt on the INT pin.

  There are two types of one-shot modes.
  - **Force auto-range one-shot mode:** Every one-shot trigger forces a full reset on the auto-ranging control logic and a fresh auto-range detection is initiated, ignoring the previous measurements. This mode is particularly useful in situations where lighting conditions are expected to change frequently and the conditions for the one-shot trigger frequency are not expected to change very often. There is a small penalty on conversion time resulting from the auto-ranging logic recovering from a reset state. The full reset cycle on the auto-ranging control logic takes approximately 500µs, which must be accounted for between measurements when this mode is used. The OPERATING_MODE register is set to 1.
  - **Regular auto-range one-shot mode:** Auto-range selection logic uses the information from the previous measurements to determine the range for the current trigger. Only use this mode when the device needs time-synchronized measurements with frequent triggers from the controller. In other words, this mode can be used as an alternative to continuous mode. The key difference between these modes is that the interval between measurements is determined by the one-shot triggers. The OPERATING_MODE register is set to 2.

  One-shot mode can be triggered by the following:
  - **Hardware trigger:** The INT pin can be configured as an input to trigger a measurement, setting the INT_DIR register to 0. When the INT pin is used as input, there is no hardware interrupt to indicate

Copyright © 2024 Texas Instruments Incorporated

completion of measurement. The controller must keep time from the trigger mechanism and read out output registers.

– **Register trigger:** An I^2C write to the OPERATING_MODE register triggers a measurement (value of 1 or 2). The register value is reset after the next successful measurement. The INT pin can be configured to indicate measurement completion to read out the output registers by setting the INT_DIR register to 1.

The interval between subsequent triggers must be set to account for all aspects involved in the trigger mechanism, such as the I^2C transaction time, device wake-up time, auto-range time (if used), and device conversion time. If a conversion trigger is received before the completion of the current measurement, the device simply ignores the new request until the previous conversion is completed.

The device enters standby after each one-shot trigger; therefore, the measurement interval in the one-shot trigger mechanism must account for additional time (t_{ss} time, as specified in *Specifications* for the circuits to recover from standby state. However, setting the quick wake-up register QWAKE eliminates the need for this additional t_{ss} at the cost of not powering down the active circuit with the device not entering standby mode between triggers.

Figure 6-2 illustrates a timing diagram of the various operating modes.

Copyright © 2024 Texas Instruments Incorporated

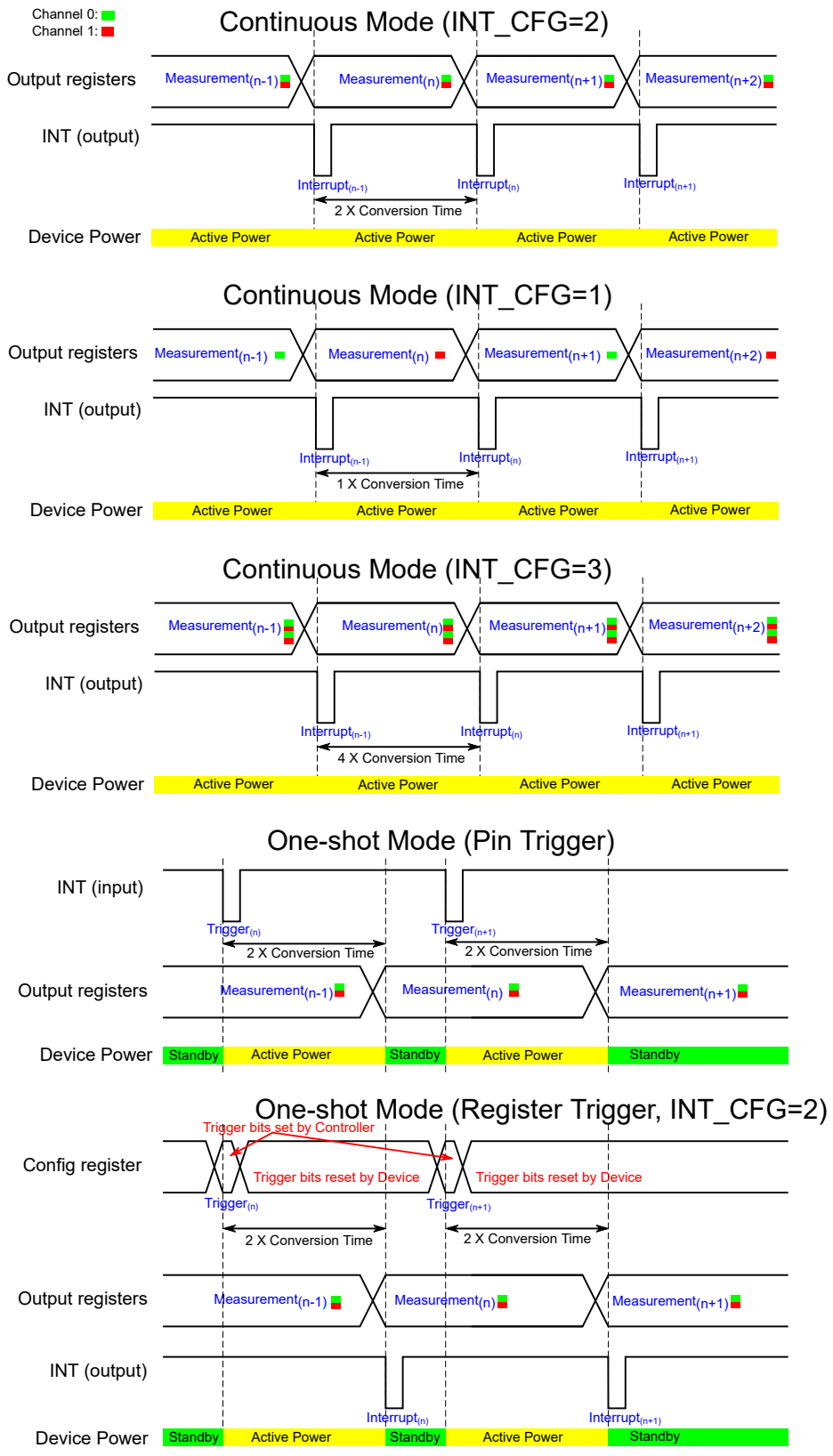

Figure 6-2. Timing Diagrams for Different Operating Modes

6.4.2 Interrupt Modes of Operation

The device has an interrupt reporting system that allows the processor connected to the I^2C bus to go to sleep, or otherwise ignore the device results, until a user-defined event occurs that requires possible action. Alternatively, this same mechanism can also be used with any system that can take advantage of a single digital signal that indicates whether the light is above or below levels of interest.

The INT pin has an open-drain output, which requires the use of a pullup resistor. This open-drain output allows multiple devices with open-drain INT pins to be connected to the same line, thus creating a logical *NOR* or *AND* function between the devices. The polarity of the INT pin can be controlled by the INT_POL register.

There are two major types of interrupt reporting mechanism modes: latched window comparison mode and transparent hysteresis comparison mode. The LATCH configuration register controls which of these two modes is used. Figure 6-3 and Table 6-1 summarize the function of these two modes. Additionally, the INT pin can either be used to indicate a fault in one of these modes (INT_CFG = 0) or to indicate a conversion completion (INT_CFG > 0). Table 6-2 details this functionality.

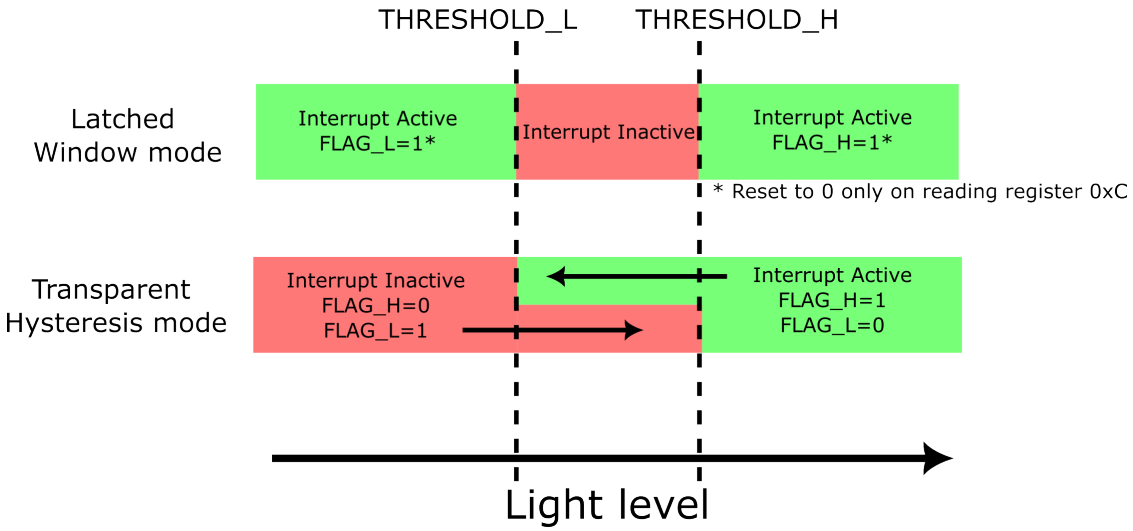

Figure 6-3. Interrupt Pin Status (INT_CFG = 0 Setting) and Register Flag Behavior

Copyright © 2024 Texas Instruments Incorporated

Table 6-1. Interrupt Pin Status (INT_CFG = 0 Setting) and Register Flag Behavior

LATCH SETTING	INT PIN STATE (WHEN INT_CFG=0)	FLAG_H VALUE	FLAG_L VALUE	LATCHING BEHAVIOR
0: Transparent hysteresis mode	The INT pin indicates if measurement is above (INT active) or below (INT inactive) the threshold. If measurement is between the high and low threshold values, then the previous INT value is maintained. This mode prevents the INT pin from repeated toggling when the measurement values are close to the threshold.	0: If measurement is below the low limit 1: If measurement is above the high limit If measurement is between the high and low limits, the previous value is maintained.	0: If measurement is above the high limit 1: If measurement is below the low limit If measurement is between the high and low limits, the previous value is maintained.	Not latching: Values are updated after each conversion
1: Latched window mode	The INT pin becomes active if the measurement is outside the window (above the high threshold or below the low threshold). The INT pin does not reset and returns to the inactive state until the 0xC is register read.	1: If measurement is above the high limit	1: If measurement is below the low limit	Latching: The INT pin, FLAG_H, and FLAG_L values do not reset until the 0x0C register is read.

The THRESHOLD_H, THRESHOLD_L, LATCH, and FAULT_COUNT registers control the interrupt behavior. As shown in Table 6-1, the LATCH field setting provides a choice between the latched window mode and transparent hysteresis mode. Interrupt reporting can be observed on the INT pin, the FLAG_H, and the FLAG_L registers.

Results from comparing the current sensor measurements with the THRESHOLD_H and THRESHOLD_L registers are referred to as *fault events*. See the *Section 6.4.6* section for the calculations to set these registers. The FAULT_COUNT register dictates the number of continuous *fault events* required to trigger an interrupt event and subsequently change the state of the interrupt reporting mechanisms. For example, with a FAULT_COUNT value of 2 corresponding to four fault counts, the INT pin, FLAG_H, and FLAG_L states shown in Figure 6-3 are not realized unless four consecutive measurements are taken that satisfy the fault condition.

The INT pin function listed in Figure 6-3 is valid only when INT_CFG = 0. As described in Table 6-2, the INT pin function can be changed to indicate an end of conversion or FIFO full state. The FLAG_H and FLAG_L registers continue to behave as listed in Figure 6-3, even while INT_CFG > 0. The polarity of the INT pin is controlled by the INT_POL register.

Table 6-2. INT_CFG Setting and Resulting INT Pin Behavior

INT_CFG SETTING	INT PIN FUNCTION
0	As per Figure 6-3
1	INT pin asserted with a 1µs pulse duration after every conversion
2	INT pin asserted with a 1µs pulse duration every two conversions to indicate both channel measurements are complete
3	INT pin asserted with a 1µs pulse duration every four conversions to indicate the FIFO is full

6.4.3 Light Range Selection

The OPT4041 has an automatic full-scale-range setting mode that eliminates the need for a user to predict and set the optimal range for the device. Set the RANGE register to 0xC to enter this mode. The device determines the appropriate full-scale range to take the measurement based on a combination of current lighting conditions and the previous measurement.

Copyright © 2024 Texas Instruments Incorporated

If a measurement is towards the low side of full-scale, then the full-scale range is decreased by one or two settings for the next measurement. If a measurement is towards the upper side of full-scale, the full-scale range is increased by one setting for the next measurement.

If the measurement exceeds the full-scale range, resulting from a fast increasing optical transient event, the current measurement is aborted. This invalid measurement is not reported. If the scale is not at the maximum, the device increases the scale by one step and a new measurement is retaken with that scale. Therefore, during a fast increasing optical transient in this mode, a measurement can possibly take longer to complete and report than indicated by the CONVERSION_TIME configuration register.

Using this feature is highly recommended because the device selects the best range setting based on lighting conditions. However, there is an option to manually set the range. Setting the range manually turns off the automatic full-scale selection logic and the device operates for a particular range setting. Table 6-3 lists the range selection settings.

Table 6-3. Range Selection Table

RANGE register setting	CH0 Typical Full-Scale Light Level	CH0 Exponent	CH1 Typical Full-Scale Light Level	CH1 Exponent
0	613lux	0	0.202mW/cm^2	0
1	1227lux	1	0.403mW/cm^2	1
2	2454lux	2	0.807mW/cm^2	2
3	4907lux	3	1.61mW/cm^2	3
4	9815lux	4	3.23mW/cm^2	4
5	19629lux	5	6.45mW/cm^2	5
6	39259lux	6	12.91mW/cm^2	6
7	78517lux	7	12.91mW/cm^2	6
8	157035lux	8	12.91mW/cm^2	6
12	Determined by automatic full-scale range logic; sets channel 0 and channel 1 independently			

6.4.4 Selecting Conversion Time

As listed in Table 6-4, the OPT4041 offers several conversion times that can be selected. Conversion time is defined as the time taken from initiation to completion of one measurement, including the time taken to update the results in the output register. Measurement initiation is determined by the mode of operation, as specified in Section 6.4.1.

Table 6-4. Conversion Time Selection

CONVERSION_TIME register	Typical Conversion time
0	0.6ms
1	1ms
2	1.8ms
3	3.4ms
4	6.5ms
5	12.7ms
6	25ms
7	50ms
8	100ms
9	200ms
10	400ms
11	800ms

Copyright © 2024 Texas Instruments Incorporated

6.4.5 Light Measurement in Lux

The OPT4041 measures light and updates output registers with proportional ADC codes. The output of the device is represented by two parts: by four EXPONENT register bits and by 20 MANTISSA bits. This arrangement of binary logarithmic full-scale ranges with linear representation in a range helps cover a large dynamic range of measurements. MANTISSA represents the linear ADC codes proportional to the measured light within a given full-scale range and the EXPONENT bits represent the current full-scale range selected. The selected range can either be automatically determined by the auto-range selection logic or manually selected as per Table 6-3

The lux level can be determined using the following equations. First, use Equation 1or Equation 2 to calculate the MANTISSA. Next, use Equation 3 or Equation 4 to calculate the ADC_CODES. Finally, use Equation 5 to calculate the lux.

$$MANTISSA = (RESULT_MSB << 8) + RESULT_LSB \quad (1)$$

or

$$MANTISSA = (RESULT_MSB \times 2^8) + RESULT_LSB \quad (2)$$

where:

- The RESULT_MSB, RESULT_LSB, and EXPONENT bits are parts of the output register

The RESULT_MSB register carries the most significant 12 bits of the MANTISSA, and the RESULT_LSB register carries the least significant eight bits of the MANTISSA. Use the previous equations to get the 20-bit MANTISSA number. The four EXPONENT bits are directly read from the register.

After the EXPONENT and MANTISSA portions are calculated, use Equation 3 or Equation 4 to calculate the linearized ADC_CODES.

$$ADC_CODES = (MANTISSA << E) \quad (3)$$

or

$$ADC_CODES = (MANTISSA \times 2^E) \quad (4)$$

The maximum value for register E is 8, thus the ADC_CODES is effectively a 28-bit number. As shown in Equation 5, the semi-logarithmic numbers are converted to a linear ADC_CODES representation, which is simple to convert to lux.

$$lux = ADC_CODES \times 585E\text{-}6 \quad (5)$$

The MANTISSA and ADC_CODES are large numbers with 20 and 28 bits required to represent them. While developing firmware or software for these calculations, allocating appropriate data types to prevent data overflow is important. Some explicit typecasting to a larger data type is recommended, such as 32-bit representation before a left-shift operation (<<).

6.4.6 Threshold Detection Calculations

The THRESHOLD_H_RESULT and THRESHOLD_L_RESULT threshold result registers are 12 bits, whereas the THRESHOLD_H_EXPONENT and THRESHOLD_L_EXPONENT threshold exponent registers are four bits. The threshold is compared at linear ADC_CODES, as given by the following equations. Therefore, the threshold registers are padded with zeros internally to compare with the ADC_CODES.

$$ADC_CODES_TH = THRESHOLD_H_RESULT << (8 + THRESHOLD_H_EXPONENT) \quad (6)$$

or

Copyright © 2024 Texas Instruments Incorporated

ADC_CODES_TH = THRESHOLD_H_RESULT × 2^(8 + THRESHOLD_H_EXPONENT) (7)

and

ADC_CODES_TL = THRESHOLD_L_RESULT << (8 + THRESHOLD_L_EXPONENT) (8)

or

ADC_CODES_TL=THRESHOLD_L_RESULT × 2^(8 + THRESHOLD_L_EXPONENT) (9)

Threshold are then compared as given in the following equations to detect *fault events.*

If ADC_CODES < ADC_CODES_TL a *fault low* is detected (10)

and

If ADC_CODES > ADC_CODES_TH a *fault high* is detected (11)

Based on the FAULT_COUNT register setting, with consecutive *fault high* or *fault low* events, the respective FLAG_H and FLAG_L registers are set. See the Interrupt Modes of Operation section for more information. Understanding the relation between the THRESHOLD_H_EXPONENT, THRESHOLD_H_RESULT, THRESHOLD_L_EXPONENT, and THRESHOLD_L_RESULT register bits and the output registers is important to set the appropriate threshold based on application needs.

6.4.7 Light Resolution

The effective resolution of the OPT4041 is dependent on both the conversion time setting and the full-scale light range. Although the LSB resolution of the linear ADC_CODES does not change, the effective or useful resolution of the device is dependent (as per Table 6-5) on the conversion time setting and the full-scale range. In conversion times where the effective resolution is lower, the LSBs are padded with 0.

Table 6-5. Channel 0 Resolution Table

CONVERSION_TIME REGISTER	CONVERSION TIME	MANTISSA EFFECTIVE BITS	EXPONENT								
			0	1	2	3	4	5	6	7	8
			FULL-SCALE LUX (Effective Resolution in Lux)								
			613	1227	2454	4907	9815	19629	39259	78517	157034
0	600µs	9	1.198	2.396	4.792	9.585	19.17	38.34	76.68	153.35	306.71
1	1ms	10	599.04m	1.198	2.396	4.792	9.585	19.17	38.34	76.68	153.35
2	1.8ms	11	299.52m	599.04m	1.198	2.396	4.792	9.585	19.17	38.34	76.68
3	3.4ms	12	149.76m	299.52m	599.04m	1.198	2.396	4.792	9.585	19.17	38.34
4	6.5ms	13	74.88m	149.76m	299.52m	599.04m	1.198	2.396	4.792	9.585	19.17
5	12.7ms	14	37.44m	74.88m	149.76m	299.52m	599.04m	1.198	2.396	4.792	9.585
6	25ms	15	18.72m	37.44m	74.88m	149.76m	299.52m	599.04m	1.198	2.396	4.792
7	50ms	16	9.36m	18.72m	37.44m	74.88m	149.76m	299.52m	599.04m	1.198	2.396
8	100ms	17	4.86m	9.36m	18.72m	37.44m	74.88m	149.76m	299.52m	599.04m	1.198
9	200ms	18	2.34m	4.86m	9.36m	18.72m	37.44m	74.88m	149.76m	299.52m	599.04m
10	400ms	19	1.17m	2.34m	4.86m	9.36m	18.72m	37.44m	74.88m	149.76m	299.52m
11	800ms	20	0.585m	1.17m	2.34m	4.86m	9.36m	18.72m	37.44m	74.88m	149.76m

Table 6-6. Channel 1 Resolution Table

CONVERSION_TIME REGISTER	CONVERSION TIME	MANTISSA EFFECTIVE BITS	EXPONENT						
			0	1	2	3	4	5	6
			FULL-SCALE IRRADIANCE (µW/cm^2)						
			202	403	807	1610	3230	6450	12910
			Effective Resolution (nW/cm^2)						
0	600µs	9	393.83	787.66	1575.32	3150.64	6301.29	12602.57	25205.15

Copyright © 2024 Texas Instruments Incorporated

Table 6-6. Channel 1 Resolution Table (continued)

CONVERSION_TIME REGISTER	CONVERSION TIME	MANTISSA EFFECTIVE BITS	EXPONENT						
			0	1	2	3	4	5	6
			FULL-SCALE IRRADIANCE (μW/cm²)						
			202	403	807	1610	3230	6450	12910
			Effective Resolution (nW/cm²)						
1	1ms	10	196.92	393.83	787.66	1575.32	3150.64	6301.29	12602.57
2	1.8ms	11	98.46	196.92	393.83	787.66	1575.32	3150.64	6301.29
3	3.4ms	12	49.23	98.46	196.92	393.83	787.66	1575.32	3150.64
4	6.5ms	13	24.61	49.23	98.46	196.92	393.83	787.66	1575.32
5	12.7ms	14	12.31	24.61	49.23	98.46	196.92	393.83	787.66
6	25ms	15	6.15	12.31	24.61	49.23	98.46	196.92	393.83
7	50ms	16	3.08	6.15	12.31	24.61	49.23	98.46	196.92
8	100ms	17	1.54	3.08	6.15	12.31	24.61	49.23	98.46
9	200ms	18	0.769	1.54	3.08	6.15	12.31	24.61	49.23
10	400ms	19	0.385	0.769	1.54	3.08	6.15	12.31	24.61
11	800ms	20	0.192	0.385	0.769	1.54	3.08	6.15	12.31

6.5 Programming

The OPT4041 supports the transmission protocol for standard mode (up to 100kHz), fast mode (up to 400kHz), and high-speed mode (up to 2.6MHz). Fast and standard modes are described as the default protocol, referred to as *F/S*. High-speed mode is described in the High-Speed I²C Mode section.

6.5.1 I²C Bus Overview

The OPT4041 offers compatibility with both I²C and SMBus interfaces. The I²C and SMBus protocols are essentially compatible with one another. The I²C interface is used throughout this document as the primary example with the SMBus protocol specified only when a difference between the two protocols is discussed.

The device is connected to the bus with two pins: an SCL clock input pin and an SDA open-drain bidirectional data pin. The bus must have a controller device that generates the serial clock (SCL), controls the bus access, and generates start and stop conditions. To address a specific device, the controller initiates a start condition by pulling the data signal line (SDA) from a high logic level to a low logic level while SCL is high. All targets on the bus shift in the target address byte on the SCL rising edge, with the last bit indicating whether a read or write operation is intended. During the ninth clock pulse, the target being addressed responds to the controller by generating an acknowledge bit by pulling SDA low.

Data transfer is then initiated and eight bits of data are sent, followed by an acknowledge bit. During data transfer, SDA must remain stable while SCL is high. Any change in SDA while SCL is high is interpreted as a start or stop condition. When all data are transferred, the controller generates a stop condition, indicated by pulling SDA from low to high while SCL is high. The device includes a 28ms timeout on the I²C interface to prevent locking up the bus. If the SCL line is held low for this duration of time, the bus state machine is reset.

6.5.1.1 Serial Bus Address

To communicate with the OPT4041, the controller must first initiate an I²C start command. Then, the controller must address target devices through a target address byte. The target address byte consists of a seven bit address and a direction bit that indicates whether the action is to be a read or write operation.

Four I²C addresses are possible by connecting the ADDR pin to one of four pins: GND, VDD, SDA, or SCL. Table 6-7 summarizes the possible addresses with the corresponding ADDR pin configuration. The state of the ADDR pin is sampled on every bus communication and must be driven or connected to the desired level before any activity on the interface occurs.

Copyright © 2024 Texas Instruments Incorporated

Table 6-7. ADDR Pin Addresses

ADDR PIN CONNECTION	DEVICE I²C ADDRESS
GND	1000100
VDD	1000101
SDA	1000110
SCL	1000111

6.5.1.2 Serial Interface

The OPT4041 operates as a target device on both the I²C bus and SMBus. Connections to the bus are made through the SCL clock input line and the SDA open-drain I/O line. The device supports the transmission protocol for standard mode (up to 100kHz), fast mode (up to 400kHz), and high-speed mode (up to 2.6MHz). All data bytes are transmitted most significant bits first.

The SDA and SCL pins feature integrated spike-suppression filters and Schmitt triggers to minimize the effects of input spikes and bus noise.

6.5.2 Writing and Reading

Accessing a specific register on the OPT4041 is accomplished by writing the appropriate register address during the I²C transaction sequence. See the Register Maps for a complete list of registers and the corresponding register addresses. The value for the register address (as shown in Figure 6-4) is the first byte transferred after the target address byte with the R/W bit low.

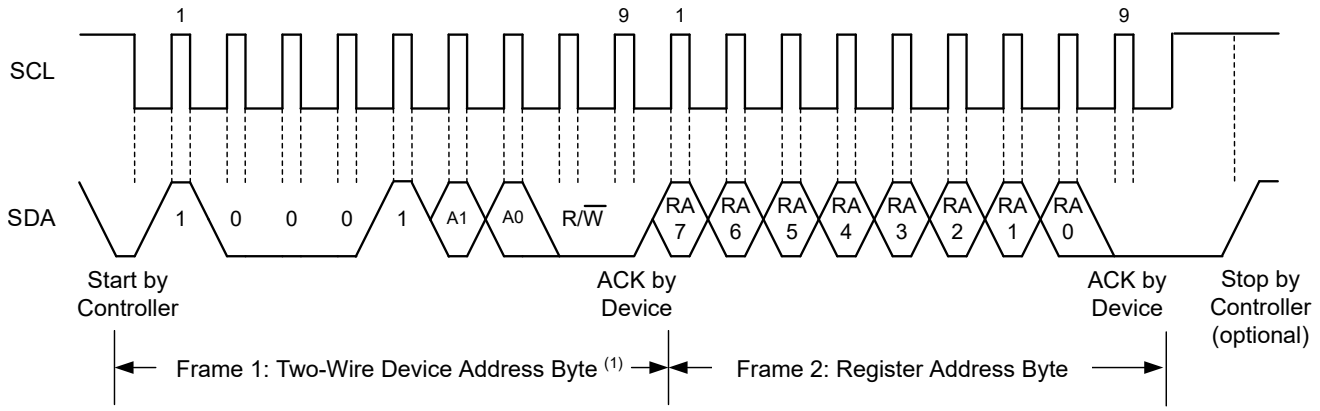

Figure 6-4. Setting the I²C Register Address

Writing to a register begins with the first byte transmitted by the controller. This byte is the target address with the R/W bit low. The device then acknowledges receipt of a valid address. The next byte transmitted by the controller is the address of the register that data are to be written to. The next two bytes are written to the register addressed by the register address. The device acknowledges receipt of each data byte. The controller can terminate the data transfer by generating a start or stop condition.

When reading from the device, the last value stored in the register address by a write operation determines which register is read during a read operation. To change the register address for a read operation, a new partial I²C write transaction must be initiated. This partial write is accomplished by issuing a target address byte with the R/W bit low, followed by the register address byte and a stop command. The controller then generates a start condition and sends the target address byte with the R/W bit high to initiate the read command. The next byte is transmitted by the target and is the most significant byte of the register indicated by the register address. This byte is followed by an acknowledge from the controller, then the target transmits the least significant byte. The controller acknowledges receipt of the data byte. The controller can terminate the data transfer by generating a not-acknowledge after receiving any data byte, or by generating a start or stop condition. If repeated reads from the same register are desired, continually sending the register address bytes is not necessary. The device retains the register address until that number is changed by the next write operation.

Copyright © 2024 Texas Instruments Incorporated

Figure 6-5 and Figure 6-6 show the write and read operation timing diagrams, respectively. Register bytes are sent most significant byte first, followed by the least significant byte.

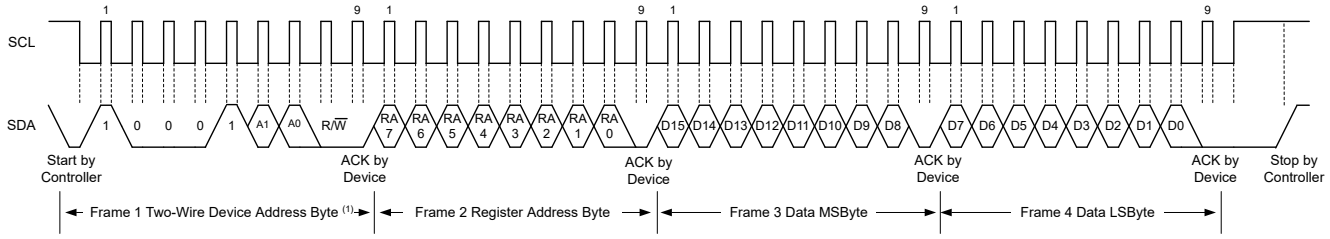

Figure 6-5. I²C Write Example

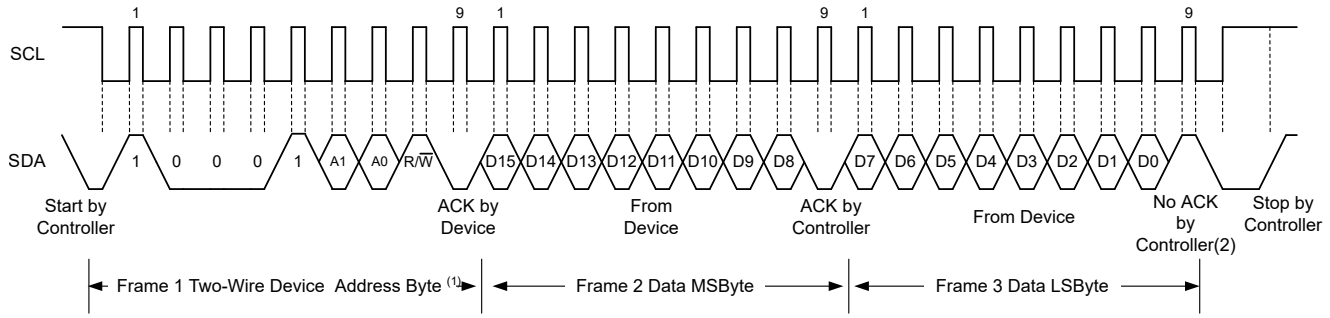

A. An ACK by the controller can also be sent.

Figure 6-6. I²C Read Example

6.5.2.1 High-Speed I²C Mode

When the bus is idle, both the SDA and SCL lines are pulled high by the pullup resistors or active pullup devices. The controller generates a start condition followed by a valid serial byte containing the high-speed (HS) controller code 0000 1XXXb. This transmission is made in either standard mode or fast mode (up to 400kHz). The device does not acknowledge the HS controller code but does recognize the code and switches the internal filters to support a 2.6MHz operation.

The controller then generates a repeated start condition (a repeated start condition has the same timing as the start condition). After this repeated start condition, the protocol is the same as F/S mode, except that transmission speeds up to 2.6MHz are allowed. Instead of using a stop condition, use repeated start conditions to secure the bus in HS mode. A stop condition ends the HS mode and switches all internal filters of the device to support the F/S mode.

6.5.2.2 Burst Read Mode

The OPT4041 supports I²C burst read mode, which helps minimize the number of transactions on the bus for efficient data transfer from the device to the controller.

Before considering the burst mode, a regular I²C read transaction involves an I²C write operation to the device read pointer, followed by the actual I²C read operation. If regular I²C read transactions are performed when reading from the output registers and FIFO registers, which are in continuous locations, then the register pointer is written every two bytes and this process takes up several clock cycles. With the burst mode enabled, the read pointer address is auto incremented after every register read (two bytes), eliminating the need to write operations to set the pointer for subsequent register reads.

Set the I2C_BURST register to enable burst mode. When a stop command is issued, the pointer resets to the original register address before the auto-increments. Figure 6-7 shows a diagram of the I²C write, single read, and burst mode read operation.

Copyright © 2024 Texas Instruments Incorporated

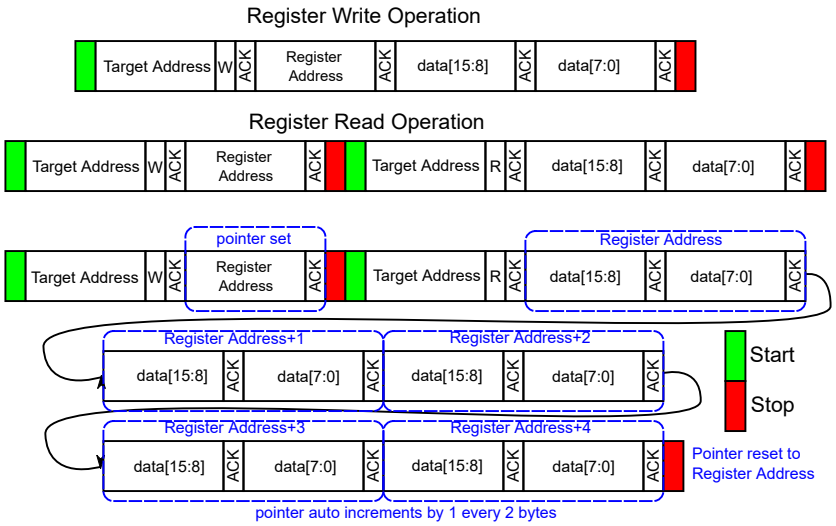

Figure 6-7. I²C Operations

6.5.2.3 General-Call Reset Command

The I²C general-call reset allows the host controller in one command to reset all devices on the bus that respond to the general-call reset command. Write to the I²C address 0 (0000 0000b) to initiate the general call. The reset command is initiated when the subsequent second address byte is 06h (0000 0110b). With this transaction, the device issues an acknowledge bit and sets all registers to the power-on-reset default condition.

Copyright © 2024 Texas Instruments Incorporated

7 Register Maps

Figure 7-1. ALL Register Map

ADD	D15	D14	D13	D12	D11	D10	D9	D8	D7	D6	D5	D4	D3	D2	D1	D0
00h	EXPONENT_CH0				RESULT_MSB_CH0											
01h	RESULT_LSB_CH0								COUNTER_CH0				CRC_CH0			
02h	EXPONENT_CH1				RESULT_MSB_CH1											
03h	RESULT_LSB_CH1								COUNTER_CH1				CRC_CH1			
04h	EXPONENT_FIFO_CH0				RESULT_MSB_FIFO_CH0											
05h	RESULT_LSB_FIFO_CH0								COUNTER_FIFO_CH0				CRC_FIFO_CH0			
06h	EXPONENT_FIFO_CH1				RESULT_MSB_FIFO_CH1											
07h	RESULT_LSB_FIFO_CH1								COUNTER_FIFO_CH1				CRC_FIFO_CH1			
08h	THRESHOLD_L_EXPONENT				THRESHOLD_L_RESULT											
09h	THRESHOLD_H_EXPONENT				THRESHOLD_H_RESULT											
0Ah	QWAKE	0	RANGE				CONVERSION_TIME				OPERATING_MODE		LATCH	INT_POL	FAULT_COUNT	
0Bh	128										THRESHOLD_CH_SEL	INT_DIR	INT_CFG		0	I2C_BURST
0Ch	0												OVERLOAD_FLAG	CONVERSION_READY_FLAG	FLAG_H	FLAG_L
11h	0		DIDL		DIDH											

7.1 Register Descriptions

7.1.1 Register 0h (offset = 0h) [reset = 0h]

Figure 7-2. Register 0h

15	14	13	12	11	10	9	8
EXPONENT_CH0				RESULT_MSB_CH0			
R-0h				R-0h			
7	6	5	4	3	2	1	0
RESULT_MSB_CH0							
R-0h							

LEGEND: R/W = Read/Write; W = Write only; -n = value after reset

Figure 7-3. Register 00 Field Descriptions

Bit	Field	Type	Reset	Description
15-12	EXPONENT_CH0	R	0h	EXPONENT output CH0. Determines the full-scale range of the light measurement for the channel. Used as a scaling factor for lux calculation.
11-0	RESULT_MSB_CH0	R	0h	Result register MSB (most significant bits) CH0. Used to calculate the MANTISSA representing light level within a given EXPONENT or full-scale range.

7.1.2 Register 1h (offset = 1h) [reset = 0h]

Figure 7-4. Register 1h

15	14	13	12	11	10	9	8
RESULT_LSB_CH0							
R-0h							
7	6	5	4	3	2	1	0
COUNTER_CH0				CRC_CH0			
R-0h				R-0h			

LEGEND: R/W = Read/Write; W = Write only; -n = value after reset

Figure 7-5. Register 01 Field Descriptions

Bit	Field	Type	Reset	Description
15-8	RESULT_LSB_CH0	R	0h	Result register LSB (least significant bits) CH0. Used to calculate MANTISSA representing light level within a given EXPONENT or full-scale range.
7-4	COUNTER_CH0	R	0h	Sample counter CH0. Rolling counter that increments for every conversion.
3-0	CRC_CH0	R	0h	CRC bits CH0. R[19:0] = MANTISSA = ((RESULT_MSB<<8) + RESULT_LSB X[0] = XOR(E[3:0], R[19:0], C[3:0]) XOR of all bits X[1] = XOR(C[1], C[3], R[1], R[3], R[5], R[7], R[9], R[11], R[13], R[15], R[17], R[19], E[1], E[3]) X[2] = XOR(C[3], R[3], R[7], R[11], R[15], R[19], E[3]) X[3] = XOR(R[3], R[11], R[19])

Copyright © 2024 Texas Instruments Incorporated

7.1.3 Register 2h (offset = 2h) [reset = 0h]

Figure 7-6. Register 2h

15	14	13	12	11	10	9	8
EXPONENT_CH1				RESULT_MSB_CH1			
R-0h				R-0h			
7	6	5	4	3	2	1	0
RESULT_MSB_CH1							
R-0h							

LEGEND: R/W = Read/Write; W = Write only; -n = value after reset

Figure 7-7. Register 02 Field Descriptions

Bit	Field	Type	Reset	Description
15-12	EXPONENT_CH1	R	0h	EXPONENT output CH1. Determines the full-scale range of the light measurement for the channel. Used as a scaling factor for lux calculation.
11-0	RESULT_MSB_CH1	R	0h	Result register MSB (most significant bits) CH1. Used to calculate the MANTISSA representing light level within a given EXPONENT or full-scale range.

7.1.4 Register 3h (offset = 3h) [reset = 0h]

Figure 7-8. Register 3h

15	14	13	12	11	10	9	8
RESULT_LSB_CH1							
R-0h							
7	6	5	4	3	2	1	0
COUNTER_CH1				CRC_CH1			
R-0h				R-0h			

LEGEND: R/W = Read/Write; W = Write only; -n = value after reset

Figure 7-9. Register 03 Field Descriptions

Bit	Field	Type	Reset	Description
15-8	RESULT_LSB_CH1	R	0h	Result register LSB (least significant bits) CH1. Used to calculate MANTISSA representing light level within a given EXPONENT or full-scale range.
7-4	COUNTER_CH1	R	0h	Sample counter CH1. Rolling counter that increments for every conversion.
3-0	CRC_CH1	R	0h	CRC bits CH1. R[19:0] = MANTISSA = ((RESULT_MSB<<8) + RESULT_LSB X[0] = XOR(E[3:0], R[19:0], C[3:0]) XOR of all bits X[1] = XOR(C[1], C[3], R[1], R[3], R[5], R[7], R[9], R[11], R[13], R[15], R[17], R[19], E[1], E[3]) X[2] = XOR(C[3], R[3], R[7], R[11], R[15], R[19], E[3]) X[3] = XOR(R[3], R[11], R[19])

Copyright © 2024 Texas Instruments Incorporated

7.1.5 Register 4h (offset = 4h) [reset = 0h]

Figure 7-10. Register 4h

15	14	13	12	11	10	9	8
EXPONENT_FIFO_CH0				RESULT_MSB_FIFO_CH0			
R-0h				R-0h			
7	6	5	4	3	2	1	0
RESULT_MSB_FIFO_CH0							
R-0h							

LEGEND: R/W = Read/Write; W = Write only; -n = value after reset

Figure 7-11. Register 04 Field Descriptions

Bit	Field	Type	Reset	Description
15-12	EXPONENT_FIFO_CH0	R	0h	EXPONENT register from FIFO CH0
11-0	RESULT_MSB_FIFO_CH0	R	0h	RESULT_MSB Register from FIFO CH0

7.1.6 Register 5h (offset = 5h) [reset = 0h]

Figure 7-12. Register 5h

15	14	13	12	11	10	9	8
RESULT_LSB_FIFO_CH0							
R-0h							
7	6	5	4	3	2	1	0
COUNTER_FIFO_CH0				CRC_FIFO_CH0			
R-0h				R-0h			

LEGEND: R/W = Read/Write; W = Write only; -n = value after reset

Figure 7-13. Register 05 Field Descriptions

Bit	Field	Type	Reset	Description
15-8	RESULT_LSB_FIFO_CH0	R	0h	RESULT_LSB register from FIFO CH0
7-4	COUNTER_FIFO_CH0	R	0h	COUNTER register from FIFO CH0
3-0	CRC_FIFO_CH0	R	0h	CRC register from FIFO CH0

Copyright © 2024 Texas Instruments Incorporated

7.1.7 Register 6h (offset = 6h) [reset = 0h]

Figure 7-14. Register 6h

15	14	13	12	11	10	9	8
EXPONENT_FIFO_CH1				RESULT_MSB_FIFO_CH1			
R-0h				R-0h			
7	6	5	4	3	2	1	0
RESULT_MSB_FIFO_CH1							
R-0h							

LEGEND: R/W = Read/Write; W = Write only; -n = value after reset

Figure 7-15. Register 06 Field Descriptions

Bit	Field	Type	Reset	Description
15-12	EXPONENT_FIFO_CH1	R	0h	EXPONENT register from FIFO CH1
11-0	RESULT_MSB_FIFO_CH1	R	0h	RESULT_MSB register from FIFO CH1

7.1.8 Register 7h (offset = 7h) [reset = 0h]

Figure 7-16. Register 7h

15	14	13	12	11	10	9	8
RESULT_LSB_FIFO_CH1							
R-0h							
7	6	5	4	3	2	1	0
COUNTER_FIFO_CH1				CRC_FIFO_CH1			
R-0h				R-0h			

LEGEND: R/W = Read/Write; W = Write only; -n = value after reset

Figure 7-17. Register 07 Field Descriptions

Bit	Field	Type	Reset	Description
15-8	RESULT_LSB_FIFO_CH1	R	0h	RESULT_LSB register from FIFO CH1
7-4	COUNTER_FIFO_CH1	R	0h	COUNTER register from FIFO CH1
3-0	CRC_FIFO_CH1	R	0h	CRC register from FIFO CH1

Copyright © 2024 Texas Instruments Incorporated

7.1.9 Register 8h (offset = 8h) [reset = 0h]

Figure 7-18. Register 8h

15	14	13	12	11	10	9	8
THRESHOLD_L_EXPONENT				THRESHOLD_L_RESULT			
R/W-0h				R/W-0h			
7	6	5	4	3	2	1	0
THRESHOLD_L_RESULT							
R/W-0h							

LEGEND: R/W = Read/Write; W = Write only; -n = value after reset

Figure 7-19. Register 08 Field Descriptions

Bit	Field	Type	Reset	Description
15-12	THRESHOLD_L_EXPONENT	R/W	0h	Threshold low register exponent
11-0	THRESHOLD_L_RESULT	R/W	0h	Threshold low register result

7.1.10 Register 9h (offset = 9h) [reset = BFFFh]

Figure 7-20. Register 9h

15	14	13	12	11	10	9	8
THRESHOLD_H_EXPONENT				THRESHOLD_H_RESULT			
R/W-Bh				R/W-Fh			
7	6	5	4	3	2	1	0
THRESHOLD_H_RESULT							
R/W-FFh							

LEGEND: R/W = Read/Write; W = Write only; -n = value after reset

Figure 7-21. Register 09 Field Descriptions

Bit	Field	Type	Reset	Description
15-12	THRESHOLD_H_EXPONENT	R/W	Bh	Threshold high register exponent
11-0	THRESHOLD_H_RESULT	R/W	FFFh	Threshold high register result

Copyright © 2024 Texas Instruments Incorporated

7.1.11 Register Ah (offset = Ah) [reset = 3208h]

Figure 7-22. Register Ah

15	14	13	12	11	10	9	8
QWAKE	0	RANGE				CONVERSION_TIME	
R/W-0h	R/W-0h	R/W-Ch				R/W-2h	
7	6	5	4	3	2	1	0
CONVERSION_TIME		OPERATING_MODE		LATCH	INT_POL	FAULT_COUNT	
R/W-0h		R/W-0h		R/W-1h	R/W-0h	R/W-0h	

LEGEND: R/W = Read/Write; W = Write only; -n = value after reset

Figure 7-23. Register 0A Field Descriptions

Bit	Field	Type	Reset	Description
15-15	QWAKE	R/W	0h	Quick wake-up from standby in one-shot mode by not powering down all circuits. Applicable only in one-shot mode and helps get out of standby mode faster with penalty in power consumption compared to full standby mode.
14-14	0	R/W	0h	Must read or write 0
13-10	RANGE	R/W	Ch	Controls the full-scale light level range of the device. The format of this register is same as the EXPONENT register for all values from 0 to 8. For CH0 and CH1 RANGE and corresponding EXPONENT values see Section 6.4.3. Channel 0: 0 = 613 lux 1 = 1.2klux 2 = 2.5klux 3 = 4.9klux 4 = 9.8klux 5 = 19.6klux 6 = 39.3klux 7 = 78.5klux 8 = 157klux 12 = Auto-range Channel 1: 0 = 0.202mW/cm^2 1 = 0.403mW/cm^2 2 = 0.807mW/cm^2 3 = 1.61mW/cm^2 4 = 3.23mW/cm^2 5 = 6.45mW/cm^2 6 = 12.91mW/cm^2 7 = 12.91mW/cm^2 8 = 12.91mW/cm^2 12 = Auto-range
9-6	CONVERSION_TIME	R/W	8h	Controls the device conversion time 0 = 600µs 1 = 1ms 2 = 1.8ms 3 = 3.4ms 4 = 6.5ms 5 = 12.7ms 6 = 25ms 7 = 50ms 8 = 100ms 9 = 200ms 10 = 400ms 11 = 800ms

Copyright © 2024 Texas Instruments Incorporated

Figure 7-23. Register 0A Field Descriptions (continued)

Bit	Field	Type	Reset	Description
5-4	OPERATING_MODE	R/W	0h	Controls device mode of operation 0 = Power-down 1 = Forced auto-range one-shot 2 = One-shot 3 = Continuous
3-3	LATCH	R/W	1h	Controls the functionality of the interrupt reporting mechanisms for the INT pin for the threshold detection logic.
2-2	INT_POL	R/W	0h	Controls the polarity or active state of the INT pin. 0 = Active low 1 = Active high
1-0	FAULT_COUNT	R/W	0h	Fault count register instructs the device as to how many consecutive fault events are required to trigger the threshold mechanisms: the flag high (FLAG_H) and the flag low (FLAG_L) registers. 0 = One fault count 1 = Two fault counts 2 = Four fault counts 3 = Eight fault counts

7.1.12 Register Bh (offset = Bh) [reset = 8011h]

Figure 7-24. Register Bh

15	14	13	12	11	10	9	8
1	0	0	0	0	0	0	0
R/W-1h	R/W-0h	R/W-0h	R/W-0h	R/W-0h	R/W-0h	R/W-0h	R/W-0h
7	6	5	4	3	2	1	0
0	0	THRESHOLD_CH _SEL	INT_DIR	INT_CFG		0	I2C_BURST
R/W-0h	R/W-0h	R/W-0h	R/W-1h	R/W-0h		R/W-0h	R/W-1h

LEGEND: R/W = Read/Write; W = Write only; -n = value after reset

Figure 7-25. Register 0B Field Descriptions

Bit	Field	Type	Reset	Description
15-6	128	R/W	200h	Must read or write 128
5-5	THRESHOLD_CH_SEL	R/W	0h	Channel select for threshold logic 0 = CH0 selected 1 = CH1 selected
4-4	INT_DIR	R/W	1h	Determines the direction of the INT pin. 0 = Input 1 = Output
3-2	INT_CFG	R/W	0h	Controls the output interrupt mechanism after end of conversion 0 = SMBus alert 1 = INT pin asserted after every conversion 2 = INT pin asserted after every two conversions 3 = INT pin asserted after every 4 conversions (FIFO full)
1-1	0	R/W	0h	Must read or write 0
0-0	I2C_BURST	R/W	1h	When set, enables I^2C burst mode minimizing I^2C read cycles by auto incrementing read register pointer by 1 after every register read.

Copyright © 2024 Texas Instruments Incorporated

7.1.13 Register Ch (offset = Ch) [reset = 0h]

Figure 7-26. Register Ch

15	14	13	12	11	10	9	8
0	0	0	0	0	0	0	0
R/W-0h	R/W-0h	R/W-0h	R/W-0h	R/W-0h	R/W-0h	R/W-0h	R/W-0h
7	6	5	4	3	2	1	0
0	0	0	0	OVERLOAD_FLAG	CONVERSION_READY_FLAG	FLAG_H	FLAG_L
R/W-0h	R/W-0h	R/W-0h	R/W-0h	R-0h	R-0h	R-0h	R-0h

LEGEND: R/W = Read/Write; W = Write only; -n = value after reset

Figure 7-27. Register 0C Field Descriptions

Bit	Field	Type	Reset	Description
15-4	0	R/W	0h	Must read or write 0
3-3	OVERLOAD_FLAG	R	0h	Indicates when an overflow condition occurs in the data conversion process, typically because the light illuminating the device exceeds the full-scale range.
2-2	CONVERSION_READY_FLAG	R	0h	Conversion-ready flag indicates when a conversion completes. The flag is set to 1 at the end of a conversion and is cleared (set to 0) when register address 0xC is either read or written with any non-zero value. 0 = Conversion in progress 1 = Conversion is complete
1-1	FLAG_H	R	0h	Flag high register identifies that the result of a conversion is the measurement of a specified level of interest. FLAG_H is set to 1 when the result is larger than the level in the THRESHOLD_H_EXPONENT and THRESHOLD_H_RESULT registers for a consecutive number of measurements defined by the FAULT_COUNT register.
0-0	FLAG_L	R	0h	Flag low register identifies that the result of a measurement is smaller than a specified level of interest. FL is set to 1 when the result is smaller than the level in the THRESHOLD_LOW_EXPONENT and THRESHOLD_L_RESULT registers for a consecutive number of measurements defined by the FAULT_COUNT register.

Copyright © 2024 Texas Instruments Incorporated

7.1.14 Register 11h (offset = 11h) [reset = 121h]

Figure 7-28. Register 11h

15	14	13	12	11	10	9	8
0	0	DIDL		DIDH			
R/W-0h	R/W-0h	R-0h		R-2h			
7	6	5	4	3	2	1	0
DIDH							
R-21h							

LEGEND: R/W = Read/Write; W = Write only; -n = value after reset

Figure 7-29. Register 11 Field Descriptions

Bit	Field	Type	Reset	Description
15-14	0	R/W	0h	Must read or write 0
13-12	DIDL	R	0h	Device ID L
11-0	DIDH	R	221h	Device ID H

Copyright © 2024 Texas Instruments Incorporated

8 Application and Implementation

Note

Information in the following applications sections is not part of the TI component specification, and TI does not warrant its accuracy or completeness. TI's customers are responsible for determining suitability of components for their purposes, as well as validating and testing their design implementation to confirm system functionality.

8.1 Application Information

Because ambient light sensors are used in a wide variety of applications that require precise measurement of light as perceived by the human eye, these sensors have a specialized filter that mimics the human eye. The following sections show crucial information about integrating the OPT4041 in applications.

8.2 Typical Application

8.2.1 Electrical Interface

As shown in Figure 8-1, the electrical interface is quite simple. Connect the OPT4041 I^2C SDA and SCL pins to the same pins of an applications processor, microcontroller, or other digital processor. If that digital processor requires an interrupt resulting from an event of interest from the OPT4041, then connect the INT pin to either an interrupt or general-purpose I/O pin of the processor. There are multiple uses for this INT pin, including triggering a measurement on one-shot mode, signaling the system to wake up from low-power mode, processing other tasks while waiting for an ambient light event of interest, or alerting the processor that a sample is ready to be read. Connect pullup resistors between a power supply appropriate for digital communication and the SDA and SCL pins (because the pins have open-drain output structures). If the INT pin is used, connect a pullup resistor to the INT pin. A typical value for these pullup resistors is 10kΩ. The resistor choice can be optimized in conjunction to the bus capacitance to balance the system speed, power, noise immunity, and other requirements.

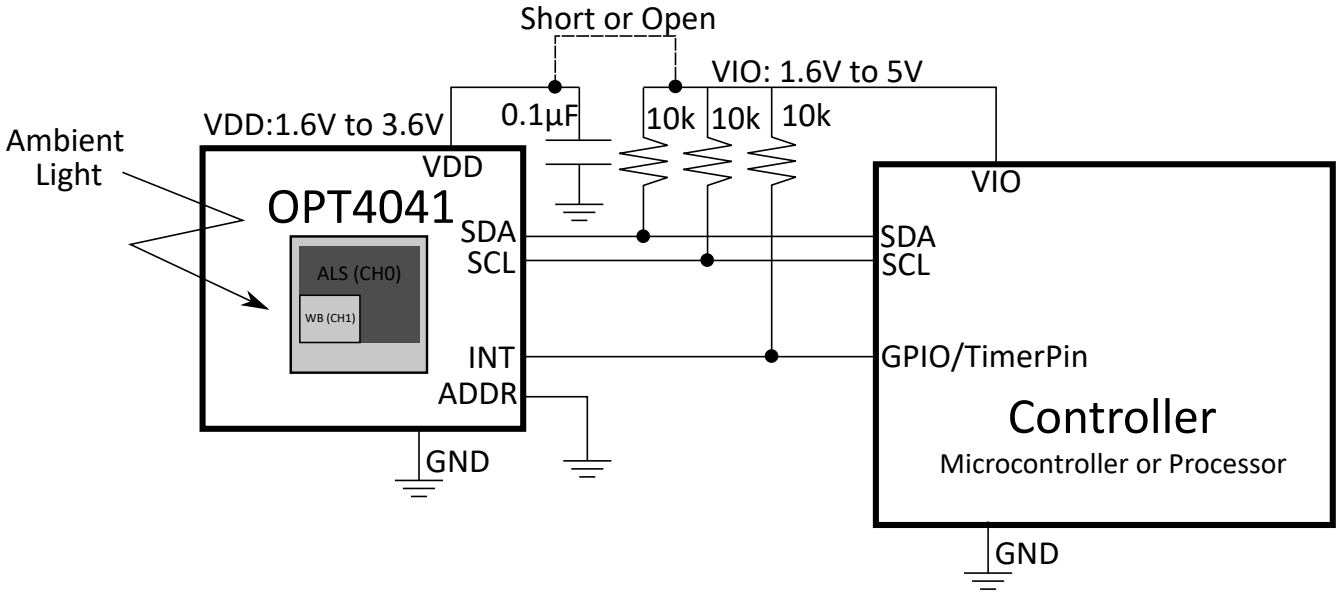

Figure 8-1. Typical Application Schematic

The power-supply and grounding considerations are discussed in the *Section 8.4* section.

Although spike suppression is integrated in the SDA and SCL pin circuits, use proper layout practices to minimize the amount of coupling into the communication lines. One possible introduction of noise occurs from capacitively coupling signal edges between the two communication lines. Another possible noise introduction

Copyright © 2024 Texas Instruments Incorporated

comes from other switching noise sources present in the system, especially for long communication lines. In noisy environments, shield communication lines to reduce the possibility of unintended noise coupling into the digital I/O lines that can be incorrectly interpreted.

8.2.1.1 Design Requirements

This section describes the design requirements for a light sensor integrated into a system behind an enclosure cutout with a dark glass. This application is a common example of a light sensor system integration. Key considerations, such as sensor field of view (FoV) and dark glass transmission, are discussed in *Section 8.2.1.1.1*.

8.2.1.1.1 Optical Interface

Figure 8-2 shows the dimensions of the optical area. The gray area indicates the channel 0 photodiode and the white area indicates the channel 1 photodiode.

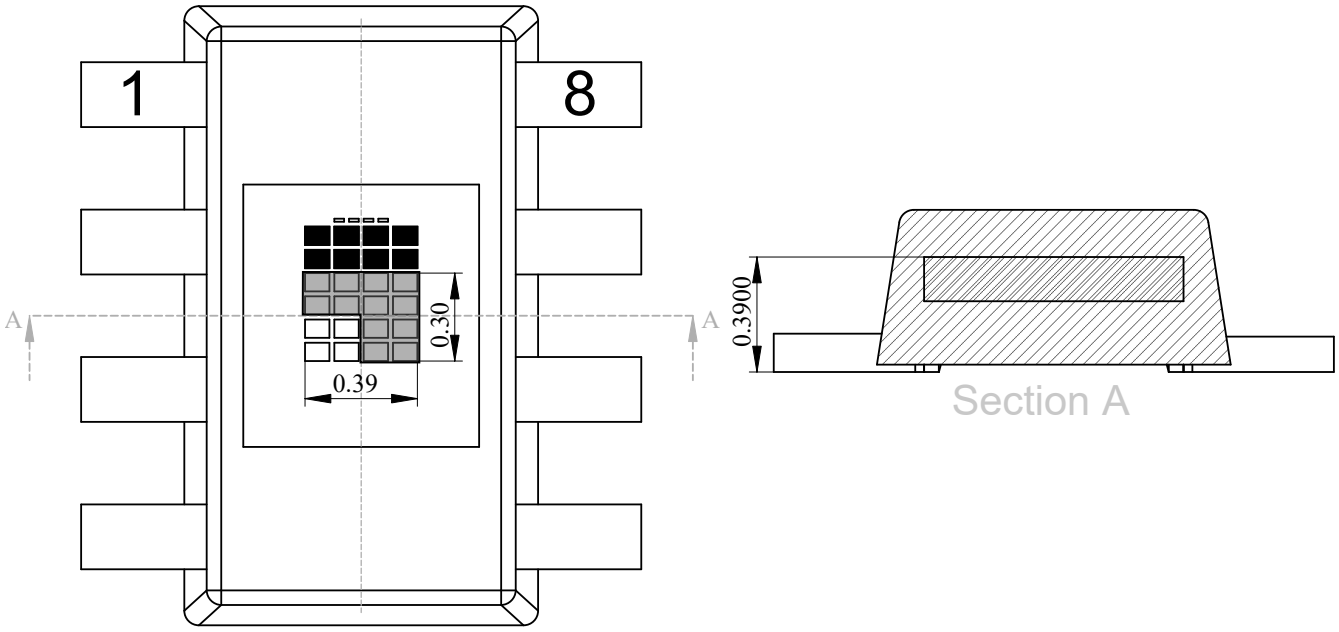

Figure 8-2. Sensor Position

Generally, any physical component that affects the light illuminating the sensing area of a light sensor also affects the performance of that light sensor. For example, a dark or opaque window can be used to further enhance the visual appeal of the design by hiding the sensor from view. This window material is typically transparent plastic or glass. Therefore, for the best performance, make sure to understand and control the effect of these components. Design a window width and height to permit light from a sufficient field of view to illuminate the sensor. For best performance, use a field of view of at least ±35°, or preferably ±45° or more. Understanding and designing the field of view is discussed further in the *OPT3001: Ambient Light Sensor Application Guide* application note.

The visible-spectrum transmission for dark windows typically ranges between 5% to 30%, but can be less than 1%. Specify a visible-spectrum transmission as low as, but no more than, necessary to achieve sufficient visual appeal because decreased transmission decreases the available light for the sensor to measure. The windows are made dark by either applying an ink to a transparent window material, or including a dye or other optical substance within the window material. This attenuating transmission in the visible spectrum of the window creates a ratio between the light on the outside of the design and the light that is measured by the device. To accurately measure the light outside of the design, compensate the device measurement for this ratio.

Although the inks and dyes of dark windows serve a primary purpose of being minimally transmissive to visible light, some inks and dyes can also be very transmissive to infrared light. The use of these inks and dyes further

Copyright © 2024 Texas Instruments Incorporated

decreases the ratio of visible to infrared light, and thus decreases sensor measurement accuracy. However, because of the excellent red and infrared rejection of the device, this effect is minimized, and good results are achieved under a dark window with similar spectral responses.

For best accuracy, avoid grill-like window structures, unless the designer understands the optical effects sufficiently. These grill-like window structures create a nonuniform illumination pattern on the sensor that causes light measurement results to vary with placement tolerances and the angle of incidence of the light. If a grill-like structure is desired, then this device is an excellent sensor choice because the device is minimally sensitive to illumination uniformity issues disrupting the measurement process.

Light pipes can appear attractive for aiding in the optomechanical design that brings light to the sensor; however, do not use light pipes with any light sensor unless the system designer fully understands the ramifications of the optical physics of light pipes within the full context of the design and objectives.

8.2.1.2 Detailed Design Procedure

8.2.1.2.1 Optomechanical Design

After completing the electrical design, the next task is the optomechanical design. Window sizing and placement is discussed in more rigorous detail in the *OPT3001: Ambient Light Sensor Application Guide* application note.

8.3 Best Design Practices

As with any optical product, take special care when handling the OPT4041. The optical surface of the device must be kept clean for the best performance, both when prototyping with the device and during mass production manufacturing procedures. Keep the optical surface clean of fingerprints, dust, and other optical-inhibiting contaminants. Use a properly-sized vacuum manipulation tool to handle the device.

If the optical surface of the device requires cleaning, then use a few gentle brushes with a soft swab of deionized water or isopropyl alcohol. Avoid potentially abrasive cleaning and manipulating tools and excessive force that can scratch the optical surface.

If the OPT4041 performance is diminished in any way, then inspect the optical surface for dirt, scratches, or other optical artifacts.

8.4 Power Supply Recommendations

Although the OPT4041 has low sensitivity to power-supply issues, good practices are always recommended. For best performance, the device VDD pin must have a stable, low-noise power supply with a 100nF bypass capacitor close to the device and solid grounding. There are many options for powering the device because of the device low current consumption levels.

8.5 Layout

8.5.1 Layout Guidelines

The PCB layout design for the OPT4041 requires a couple of considerations. Bypass the power supply with a capacitor placed close to the device. Note that optically reflective surfaces of components also affect the performance of the design. The three-dimensional geometry of all components and structures around the sensor must be taken into consideration to prevent unexpected results from secondary optical reflections. Placing capacitors and components at a distance of at least twice the height of the component is typically sufficient. The best optical layout is to place all close components on the opposite side of the PCB from the device. However, this approach is not practical for the constraints of every design. An example PCB layout with the OPT4041 is shown in Figure 8-3.

Copyright © 2024 Texas Instruments Incorporated

8.5.2 Layout Example

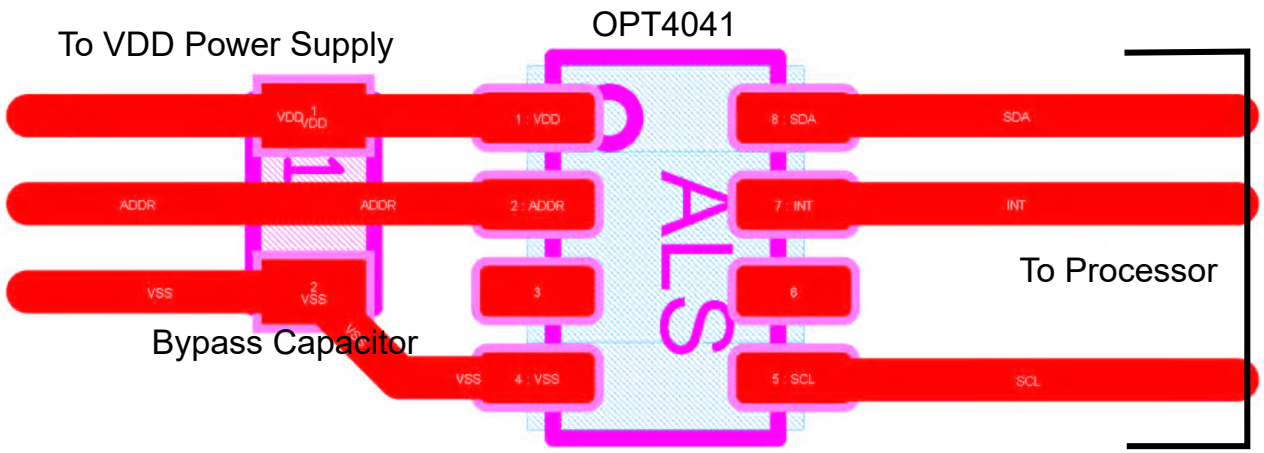

Figure 8-3. Layout Example for SOT-5X3 package

Copyright © 2024 Texas Instruments Incorporated

8.5.2.1 Soldering and Handling Recommendations

The OPT4041 has been qualified for three soldering reflow operations per JEDEC JSTD-020.

Note that excessive heat can discolor the device and affect optical performance.

See application report SLUA271, *QFN/SON PCB Attachment*, for details on soldering thermal profile and other information. If the OPT4041 must be removed from a PCB, discard the device and do not reattach.

As with most optical devices, handle the device with special care to make sure that optical surfaces stay clean and free from damage. See *Section 8.3* for more detailed recommendations. For best optical performance, solder flux and any other possible debris must be cleaned after soldering processes.



Note

The bottom side of the device features an angled feature to denote the PIN 1

Figure 8-4. Identification Feature for PIN 1

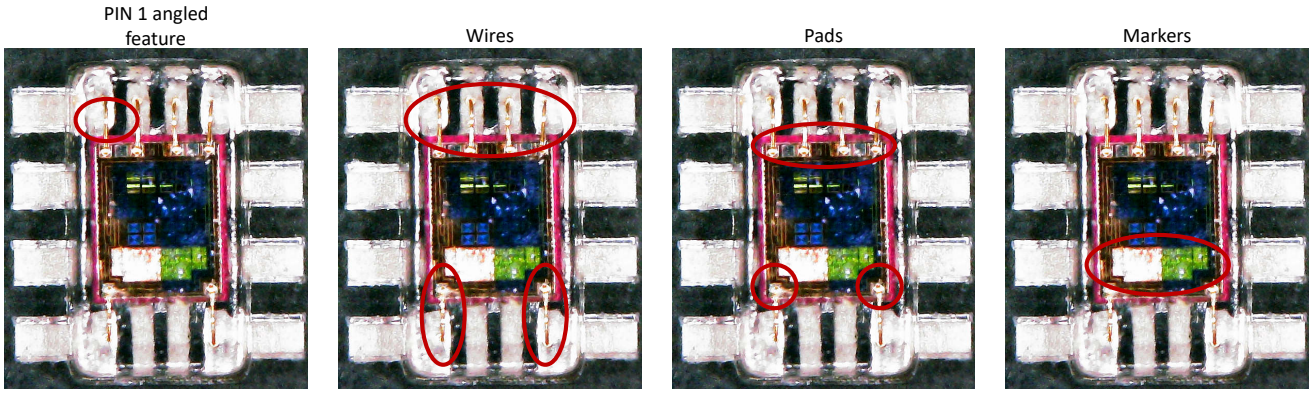

Figure 8-5. Identification Features for PIN 1 on Package

9 Device and Documentation Support

9.1 Documentation Support

9.1.1 Related Documentation

For related documentation see the following:

- Texas Instruments, *OPT3001: Ambient Light Sensor Application Guide*, application note
- Texas Instruments, *OPT4041EVM User's Guide*

9.2 Receiving Notification of Documentation Updates

To receive notification of documentation updates, navigate to the device product folder on ti.com. Click on *Notifications* to register and receive a weekly digest of any product information that has changed. For change details, review the revision history included in any revised document.

9.3 Support Resources

TI E2E™ support forums are an engineer's go-to source for fast, verified answers and design help — straight from the experts. Search existing answers or ask your own question to get the quick design help you need.

Linked content is provided "AS IS" by the respective contributors. They do not constitute TI specifications and do not necessarily reflect TI's views; see TI's Terms of Use.

9.4 Trademarks

TI E2E™ is a trademark of Texas Instruments.
All trademarks are the property of their respective owners.

9.5 Electrostatic Discharge Caution



This integrated circuit can be damaged by ESD. Texas Instruments recommends that all integrated circuits be handled with appropriate precautions. Failure to observe proper handling and installation procedures can cause damage.

ESD damage can range from subtle performance degradation to complete device failure. Precision integrated circuits may be more susceptible to damage because very small parametric changes could cause the device not to meet its published specifications.

9.6 Glossary

TI Glossary	This glossary lists and explains terms, acronyms, and definitions.

10 Revision History

NOTE: Page numbers for previous revisions may differ from page numbers in the current version.

DATE	REVISION	NOTES
December 2024	*	Initial Release

11 Mechanical, Packaging, and Orderable Information

The following pages include mechanical, packaging, and orderable information. This information is the most current data available for the designated devices. This data is subject to change without notice and revision of this document. For browser-based versions of this data sheet, refer to the left-hand navigation.

Copyright © 2024 Texas Instruments Incorporated

11.1 Mechanical Data

PACKAGE OUTLINE

DTS0008A — **FCSOT - 0.6 mm max height**

FLIPCHIP SOT

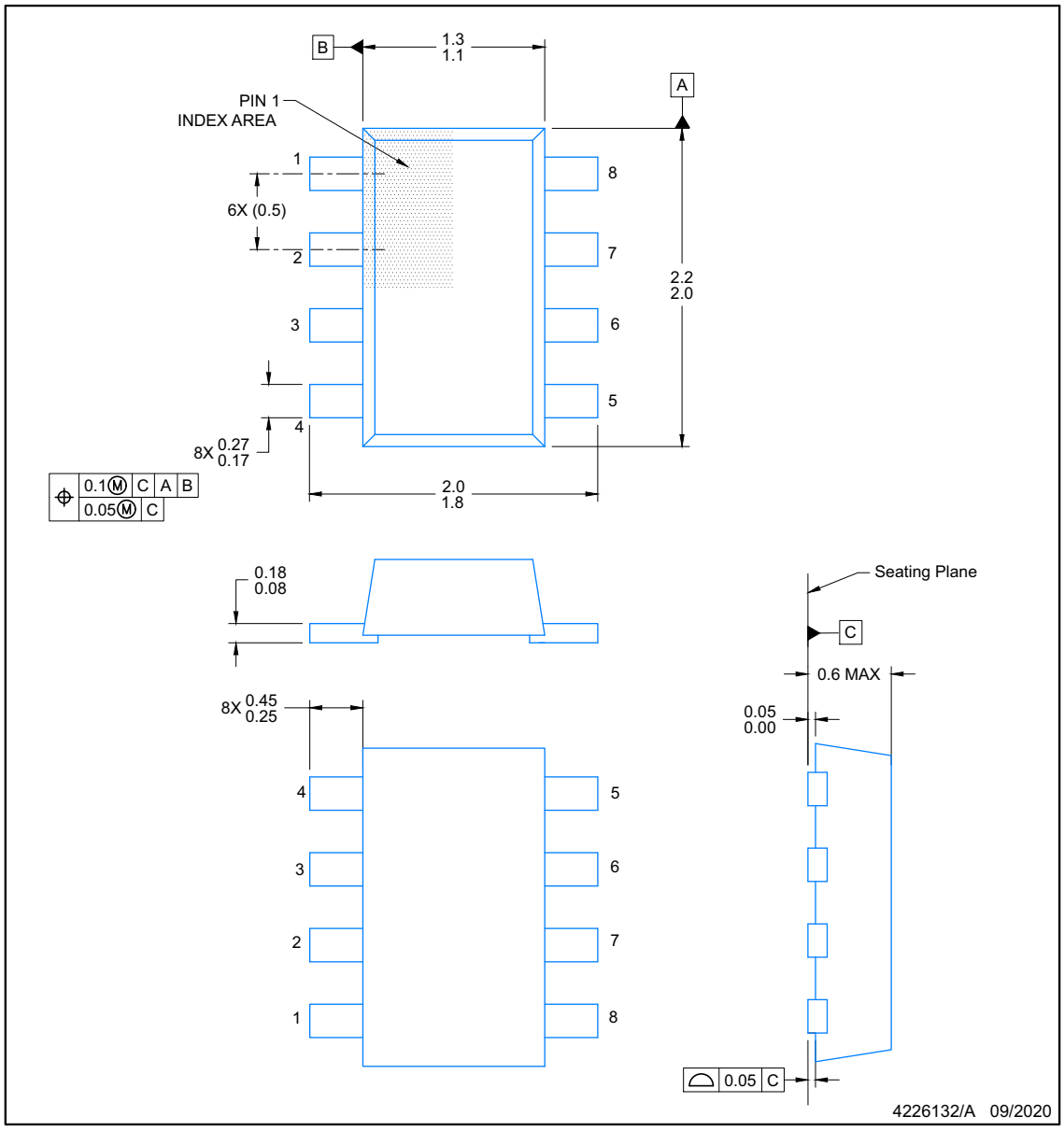

NOTES:

1. All linear dimensions are in millimeters. Any dimensions in parenthesis are for reference only. Dimensioning and tolerancing per ASME Y14.5M.
2. This drawing is subject to change without notice.
3. Body dimensions do not incude mold flash, protrusions or gate burrs.
   Mold flash, interlead flash, protrusions or gate burrs shall not exceed 0.15 per end or side
4. Reference JEDEC registration TO-236, except minimum foot length.

Copyright © 2024 Texas Instruments Incorporated

EXAMPLE BOARD LAYOUT

DTS0008A — **FCSOT - 0.6 mm max height**

FLIPCHIP SOT

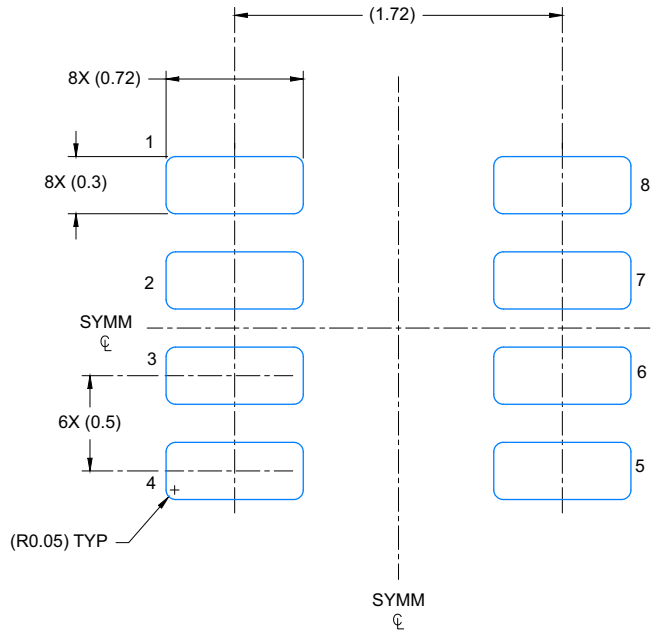

LAND PATTERN EXAMPLE
EXPOSED METAL SHOWN
SCALE: 30X

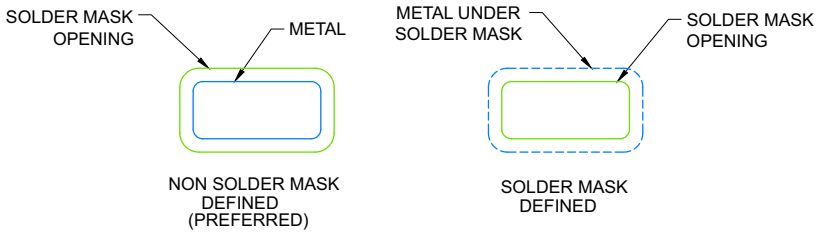

SOLDER MASK DETAILS

4226132/A 09/2020

NOTES: (continued)

5. Publication IPC-7351 may have alternate designs.
6. Solder mask tolerances between and around signal pads can vary based on board fabrication site.

Copyright © 2024 Texas Instruments Incorporated

EXAMPLE STENCIL DESIGN

DTS0008A

FCSOT - 0.6 mm max height

FLIPCHIP SOT

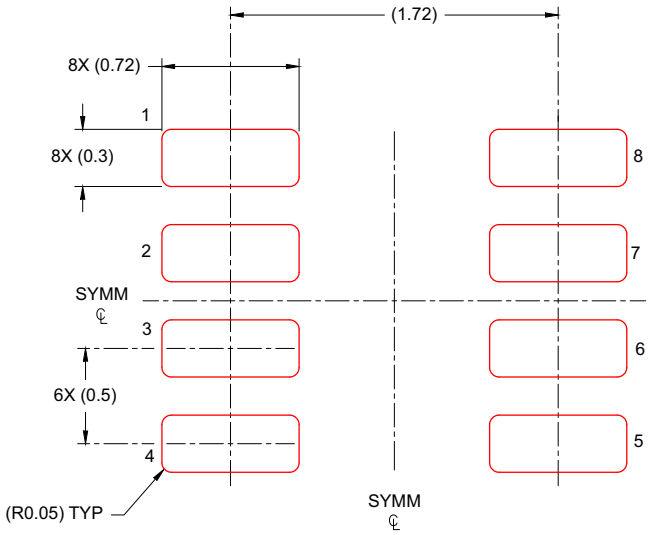

SOLDER PASTE EXAMPLE
BASED ON 0.125 mm THICK STENCIL
SCALE: 30X

4226132/A 09/2020

NOTES: (continued)

7. Laser cutting apertures with trapezoidal walls and rounded corners may offer better paste release. IPC-7525 may have alternate design recommendations.
8. Board assembly site may have different recommendations for stencil design.

Copyright © 2024 Texas Instruments Incorporated

11.2 Package Option Addendum

Packaging Information

Orderable Device	Status	Package Type	Package Drawing	Pins	Package Qty	Eco Plan	Lead/Ball Finish	MSL Peak Temp	Op Temp (°C)	Device Marking
OPT4041DTS	ACTIVE	SOT-5X3	DTS	8	3000	RoHS & Green	NIPDAU	Level-2-260C-1 YEAR	-40 TO 85	3004

Important Information and Disclaimer: The information provided on this page represents TI's knowledge and belief as of the date that it is provided. TI bases its knowledge and belief on information provided by third parties, and makes no representation or warranty as to the accuracy of such information. Efforts are underway to better integrate information from third parties. TI has taken and continues to take reasonable steps to provide representative and accurate information but may not have conducted destructive testing or chemical analysis on incoming materials and chemicals. TI and TI suppliers consider certain information to be proprietary, and thus CAS numbers and other limited information may not be available for release.

In no event shall TI's liability arising out of such information exceed the total purchase price of the TI part(s) at issue in this document sold by TI to Customer on an annual basis.

Packaging Information

Orderable Device	Status	Package Type	Package Drawing	Pins	Package Qty	Eco Plan	Lead/Ball Finish	MSL Peak Temp	Op Temp (°C)	Device Marking

Important Information and Disclaimer: The information provided on this page represents TI's knowledge and belief as of the date that it is provided. TI bases its knowledge and belief on information provided by third parties, and makes no representation or warranty as to the accuracy of such information. Efforts are underway to better integrate information from third parties. TI has taken and continues to take reasonable steps to provide representative and accurate information but may not have conducted destructive testing or chemical analysis on incoming materials and chemicals. TI and TI suppliers consider certain information to be proprietary, and thus CAS numbers and other limited information may not be available for release.

In no event shall TI's liability arising out of such information exceed the total purchase price of the TI part(s) at issue in this document sold by TI to Customer on an annual basis.

Copyright © 2024 Texas Instruments Incorporated

11.3 Tape and Reel Information

REEL DIMENSIONS

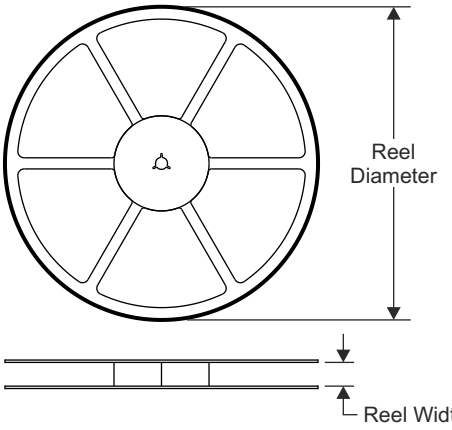

TAPE DIMENSIONS

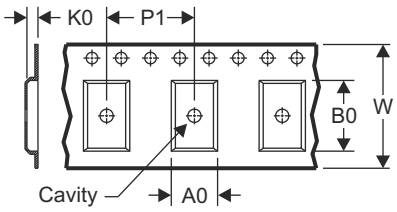

A0	Dimension designed to accommodate the component width
B0	Dimension designed to accommodate the component length
K0	Dimension designed to accommodate the component thickness
W	Overall width of the carrier tape
P1	Pitch between successive cavity centers

QUADRANT ASSIGNMENTS FOR PIN 1 ORIENTATION IN TAPE

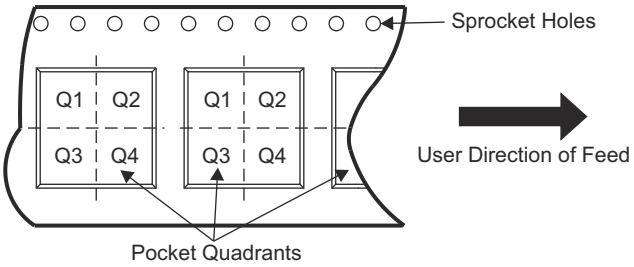

Device	Package Type	Package Drawing	Pins	SPQ	Reel Diameter (mm)	Reel Width W1 (mm)	A0 (mm)	B0 (mm)	K0 (mm)	P1 (mm)	W (mm)	Pin1 Quadrant
OPT4041DTS	SOT-5X3	DTS	8									

Copyright © 2024 Texas Instruments Incorporated

TAPE AND REEL BOX DIMENSIONS

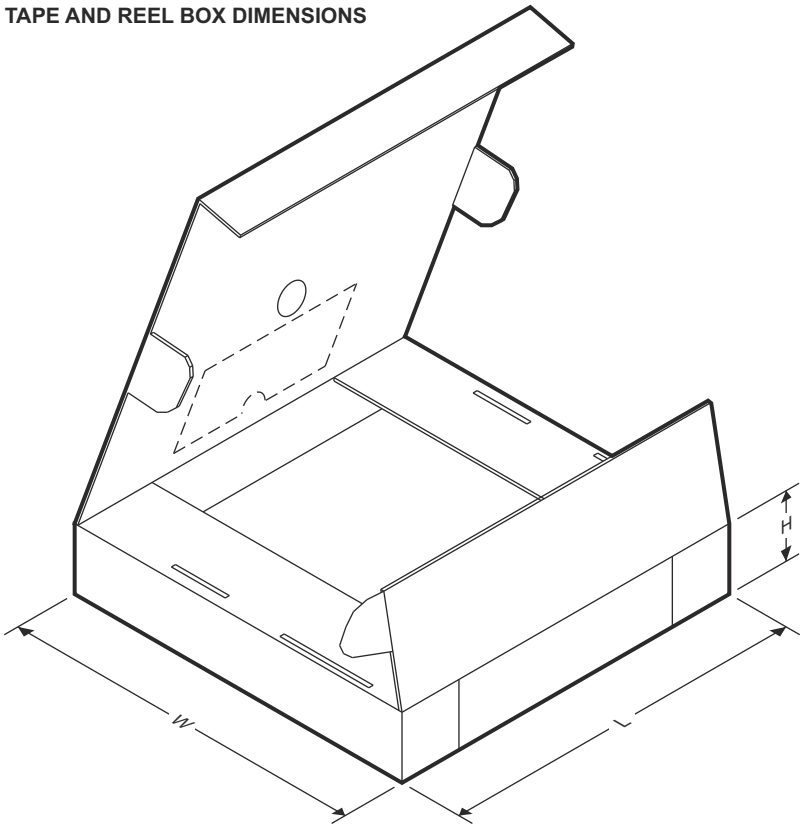

Device	Package Type	Package Drawing	Pins	SPQ	Length (mm)	Width (mm)	Height (mm)

Copyright © 2024 Texas Instruments Incorporated

PACKAGING INFORMATION

Orderable part number	Status (1)	Material type (2)	Package | Pins	Package qty | Carrier	RoHS (3)	Lead finish/ Ball material (4)	MSL rating/ Peak reflow (5)	Op temp (°C)	Part marking (6)
OPT4041DTSR	Active	Production	SOT-5X3 (DTS) | 8	250 | SMALL T&R	Yes	NIPDAU	Level-2-260C-1 YEAR	-40 to 85	4041
OPT4041DTSR.A	Active	Production	SOT-5X3 (DTS) | 8	250 | SMALL T&R	Yes	NIPDAU	Level-2-260C-1 YEAR	See OPT4041DTSR	4041

(1) **Status:** For more details on status, see our product life cycle.

(2) **Material type:** When designated, preproduction parts are prototypes/experimental devices, and are not yet approved or released for full production. Testing and final process, including without limitation quality assurance, reliability performance testing, and/or process qualification, may not yet be complete, and this item is subject to further changes or possible discontinuation. If available for ordering, purchases will be subject to an additional waiver at checkout, and are intended for early internal evaluation purposes only. These items are sold without warranties of any kind.

(3) **RoHS values:** Yes, No, RoHS Exempt. See the TI RoHS Statement for additional information and value definition.

(4) **Lead finish/Ball material:** Parts may have multiple material finish options. Finish options are separated by a vertical ruled line. Lead finish/Ball material values may wrap to two lines if the finish value exceeds the maximum column width.

(5) **MSL rating/Peak reflow:** The moisture sensitivity level ratings and peak solder (reflow) temperatures. In the event that a part has multiple moisture sensitivity ratings, only the lowest level per JEDEC standards is shown. Refer to the shipping label for the actual reflow temperature that will be used to mount the part to the printed circuit board.

(6) **Part marking:** There may be an additional marking, which relates to the logo, the lot trace code information, or the environmental category of the part.

Multiple part markings will be inside parentheses. Only one part marking contained in parentheses and separated by a "~" will appear on a part. If a line is indented then it is a continuation of the previous line and the two combined represent the entire part marking for that device.

Important Information and Disclaimer: The information provided on this page represents TI's knowledge and belief as of the date that it is provided. TI bases its knowledge and belief on information provided by third parties, and makes no representation or warranty as to the accuracy of such information. Efforts are underway to better integrate information from third parties. TI has taken and continues to take reasonable steps to provide representative and accurate information but may not have conducted destructive testing or chemical analysis on incoming materials and chemicals. TI and TI suppliers consider certain information to be proprietary, and thus CAS numbers and other limited information may not be available for release.

In no event shall TI's liability arising out of such information exceed the total purchase price of the TI part(s) at issue in this document sold by TI to Customer on an annual basis.

PACKAGE OUTLINE

DTS0008A

SOT - 0.6 mm max height

SMALL OUTLINE TRANSISTOR

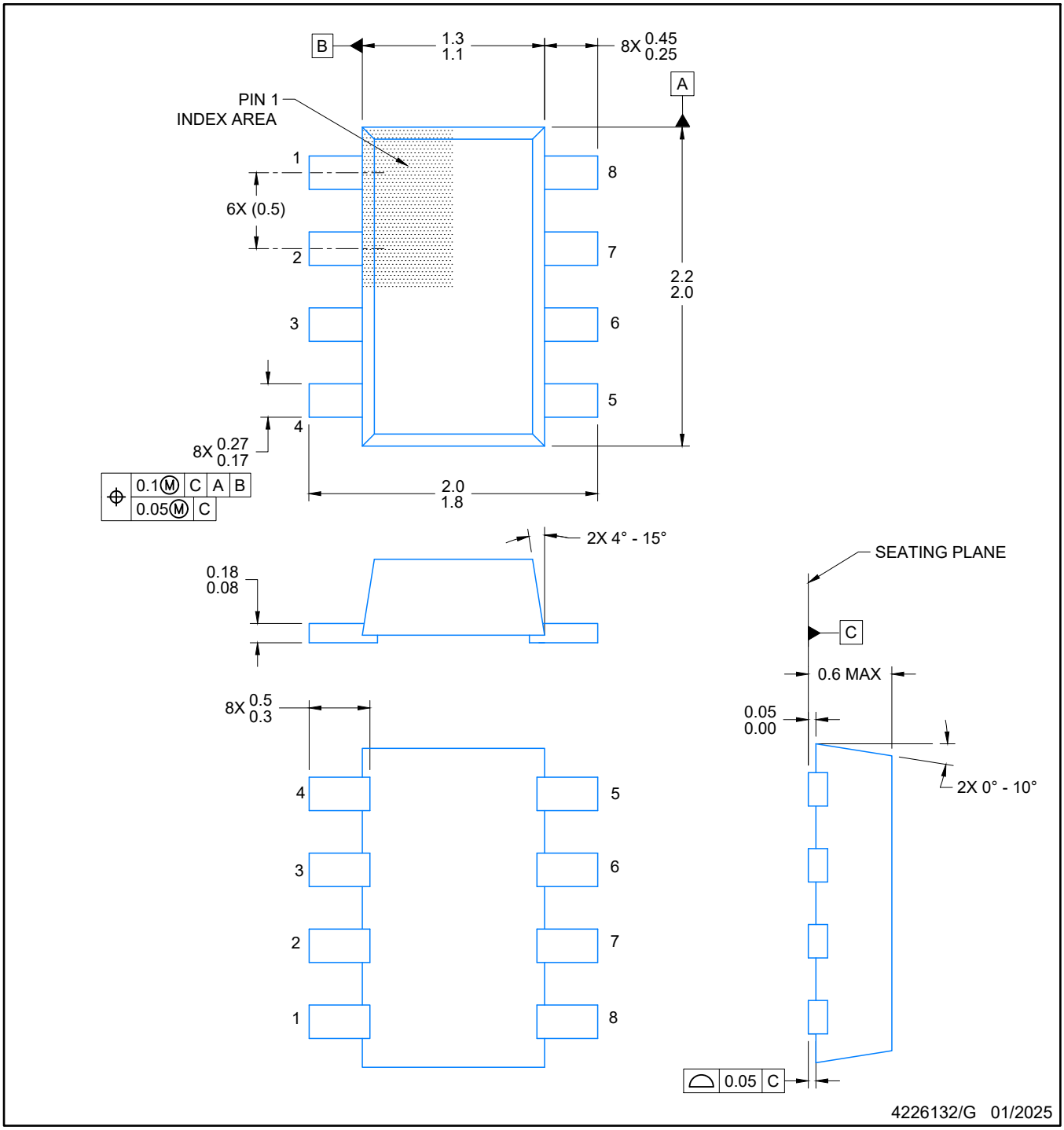

NOTES:

1. All linear dimensions are in millimeters. Any dimensions in parenthesis are for reference only. Dimensioning and tolerancing per ASME Y14.5M.
2. This drawing is subject to change without notice.
3. Body dimensions do not incude mold flash, protrusions or gate burrs. Mold flash, interlead flash, protrusions or gate burrs shall not exceed 0.171 per end or side.
4. The side flash along with the stub lead is allowed.
5. Any detached side flash from the stub lead is allowed unless it is touching the bottom side of the lead.

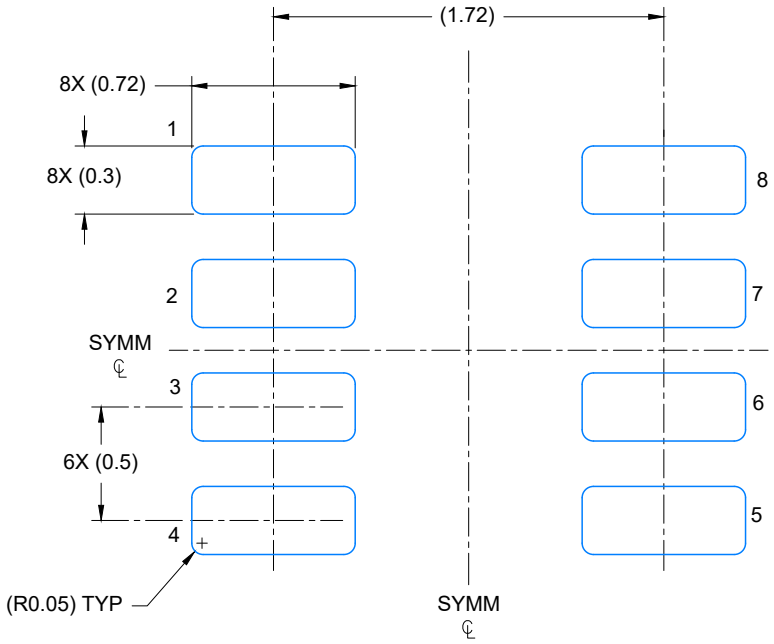

LAND PATTERN EXAMPLE
EXPOSED METAL SHOWN
SCALE: 30X

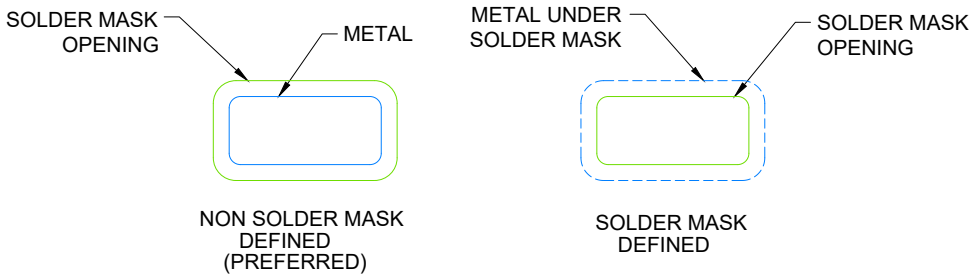

SOLDER MASK DETAILS

4226132/G 01/2025

NOTES: (continued)

6. Publication IPC-7351 may have alternate designs.
7. Solder mask tolerances between and around signal pads can vary based on board fabrication site.
8. Land pad design aligns to IPC-610, Bottom Termination Component (BTC) solder joint inspection criteria.

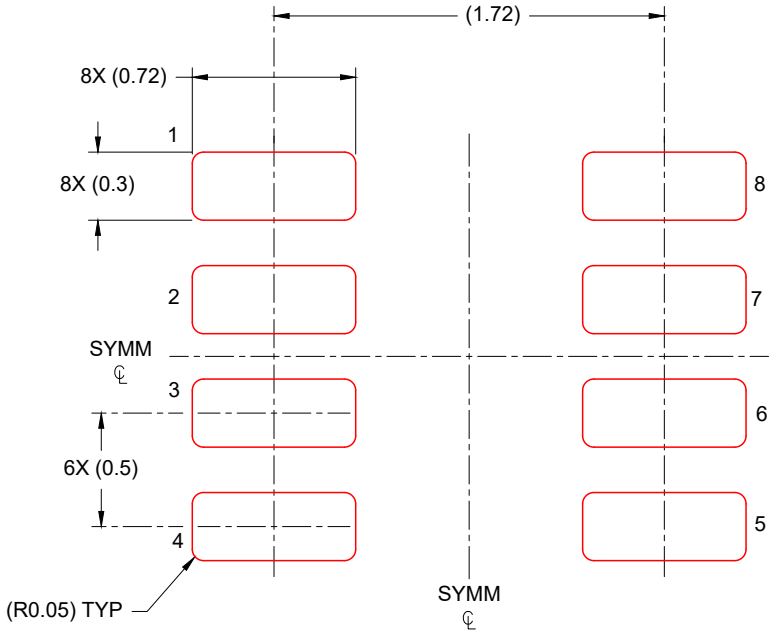

SOLDER PASTE EXAMPLE
BASED ON 0.125 mm THICK STENCIL
SCALE: 30X

4226132/G 01/2025

NOTES: (continued)

9. Laser cutting apertures with trapezoidal walls and rounded corners may offer better paste release. IPC-7525 may have alternate design recommendations.
10. Board assembly site may have different recommendations for stencil design.

IMPORTANT NOTICE AND DISCLAIMER

TI PROVIDES TECHNICAL AND RELIABILITY DATA (INCLUDING DATASHEETS), DESIGN RESOURCES (INCLUDING REFERENCE DESIGNS), APPLICATION OR OTHER DESIGN ADVICE, WEB TOOLS, SAFETY INFORMATION, AND OTHER RESOURCES “AS IS” AND WITH ALL FAULTS, AND DISCLAIMS ALL WARRANTIES, EXPRESS AND IMPLIED, INCLUDING WITHOUT LIMITATION ANY IMPLIED WARRANTIES OF MERCHANTABILITY, FITNESS FOR A PARTICULAR PURPOSE OR NON-INFRINGEMENT OF THIRD PARTY INTELLECTUAL PROPERTY RIGHTS.

These resources are intended for skilled developers designing with TI products. You are solely responsible for (1) selecting the appropriate TI products for your application, (2) designing, validating and testing your application, and (3) ensuring your application meets applicable standards, and any other safety, security, regulatory or other requirements.

These resources are subject to change without notice. TI grants you permission to use these resources only for development of an application that uses the TI products described in the resource. Other reproduction and display of these resources is prohibited. No license is granted to any other TI intellectual property right or to any third party intellectual property right. TI disclaims responsibility for, and you fully indemnify TI and its representatives against any claims, damages, costs, losses, and liabilities arising out of your use of these resources.

TI’s products are provided subject to TI’s Terms of Sale, TI’s General Quality Guidelines, or other applicable terms available either on ti.com or provided in conjunction with such TI products. TI’s provision of these resources does not expand or otherwise alter TI’s applicable warranties or warranty disclaimers for TI products. Unless TI explicitly designates a product as custom or customer-specified, TI products are standard, catalog, general purpose devices.

TI objects to and rejects any additional or different terms you may propose.

Copyright © 2026, Texas Instruments Incorporated

Last updated 10/2025