- **Package Options Include Plastic Small-Outline (D) Packages, Ceramic Chip Carriers (FK), and Standard Plastic (N) and Ceramic (J) 300-mil DIPs**

**SN54ALS09 . . . J PACKAGE**
**SN74ALS09 . . . D OR N PACKAGE**
**(TOP VIEW)**

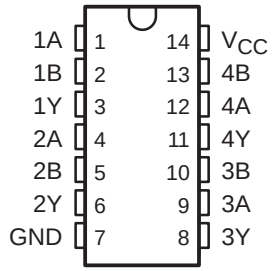


**SN54ALS09 . . . FK PACKAGE**
**(TOP VIEW)**

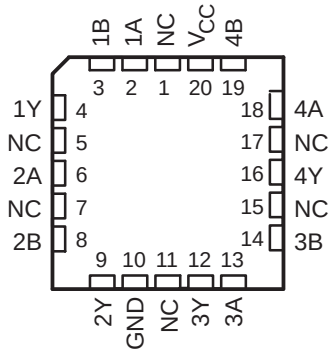


NC – No internal connection

## description

These devices contain four independent 2-input positive-AND gates. They perform the Boolean functions $Y = A \bullet B$ or $Y = \overline{A} + \overline{B}$ in positive logic. The open-collector outputs require pullup resistors to perform correctly. These outputs may be connected to other open-collector outputs to implement active-low wired-OR or active-high wired-AND functions. Open-collector devices are often used to generate higher $V_{OH}$ levels.

The SN54ALS09 is characterized for operation over the full military temperature range of –55°C to 125°C. The SN74ALS09 is characterized for operation from 0°C to 70°C.

**FUNCTION TABLE**
**(each gate)**

| INPUTS | | OUTPUT |
|---|---|---|
| A | B | Y |
| H | H | H |
| L | X | L |
| X | L | L |

## logic symbol†

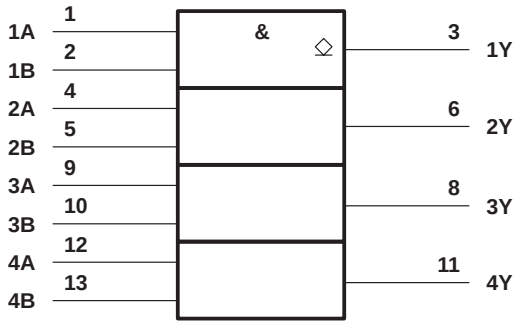


## logic diagram (positive logic)

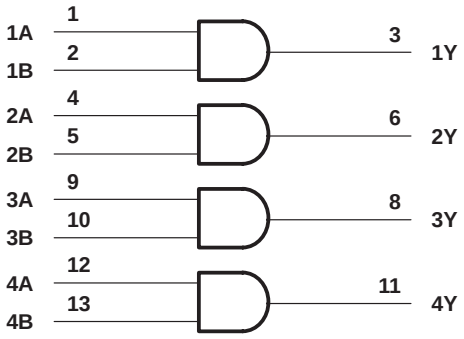


† This symbol is in accordance with ANSI/IEEE Std 91-1984 and IEC Publication 617-12.
Pin numbers shown are for the D, J, and N packages.

PRODUCTION DATA information is current as of publication date. Products conform to specifications per the terms of Texas Instruments standard warranty. Production processing does not necessarily include testing of all parameters.

Copyright © 1994, Texas Instruments Incorporated

## absolute maximum ratings over operating free-air temperature range (unless otherwise noted)†

Supply voltage, $V_{CC}$ . . . . . 7 V
Input voltage, $V_I$ . . . . . 7 V
Off-state output voltage . . . . . 7 V
Operating free-air temperature range, $T_A$: SN54ALS09 . . . . . –55°C to 125°C
SN74ALS09 . . . . . 0°C to 70°C
Storage temperature range . . . . . –65°C to 150°C

† Stresses beyond those listed under "absolute maximum ratings" may cause permanent damage to the device. These are stress ratings only, and functional operation of the device at these or any other conditions beyond those indicated under "recommended operating conditions" is not implied. Exposure to absolute-maximum-rated conditions for extended periods may affect device reliability.

## recommended operating conditions

| | | SN54ALS09 | | | SN74ALS09 | | | UNIT |
|---|---|---|---|---|---|---|---|---|
| | | MIN | NOM | MAX | MIN | NOM | MAX | |
| $V_{CC}$ | Supply voltage | 4.5 | 5 | 5.5 | 4.5 | 5 | 5.5 | V |
| $V_{IH}$ | High-level input voltage | 2 | | | 2 | | | V |
| $V_{IL}$ | Low-level input voltage | | | 0.7 | | | 0.8 | V |
| $V_{OH}$ | High-level output voltage | | | 5.5 | | | 5.5 | V |
| $I_{OL}$ | Low-level output current | | | 4 | | | 8 | mA |
| $T_A$ | Operating free-air temperature | –55 | | 125 | 0 | | 70 | °C |

## electrical characteristics over recommended operating free-air temperature range (unless otherwise noted)

| PARAMETER | TEST CONDITIONS | | SN54ALS09 | | | SN74ALS09 | | | UNIT |
|---|---|---|---|---|---|---|---|---|---|
| | | | MIN | TYP‡ | MAX | MIN | TYP‡ | MAX | |
| $V_{IK}$ | $V_{CC}$ = 4.5 V, | $I_I$ = –18 mA | | | –1.5 | | | –1.5 | V |
| $V_{OL}$ | $V_{CC}$ = 4.5 V | $I_{OL}$ = 4 mA | | 0.25 | 0.4 | | 0.25 | 0.4 | V |
| | | $I_{OL}$ = 8 mA | | | | | 0.35 | 0.5 | |
| $I_I$ | $V_{CC}$ = 5.5 V, | $V_I$ = 7 V | | | 0.1 | | | 0.1 | mA |
| $I_{IH}$ | $V_{CC}$ = 5.5 V, | $V_I$ = 2.7 V | | | 20 | | | 20 | µA |
| $I_{IL}$ | $V_{CC}$ = 5.5 V, | $V_I$ = 0.4 V | | | –0.1 | | | –0.1 | mA |
| $I_{OH}$ | $V_{CC}$ = 4.5 V, | $V_{OH}$ = 5.5 V | | | 0.1 | | | 0.1 | mA |
| $I_{CCH}$ | $V_{CC}$ = 5.5 V, | $V_I$ = 4.5 V | | 1.35 | 2.4 | | 1.35 | 2.4 | mA |
| $I_{CCL}$ | $V_{CC}$ = 5.5 V, | $V_I$ = 0 | | 2.2 | 4 | | 2.2 | 4 | mA |

‡ All typical values are at $V_{CC}$ = 5 V, $T_A$ = 25°C.

## switching characteristics (see Figure 1)

| PARAMETER | FROM (INPUT) | TO (OUTPUT) | $V_{CC}$ = 4.5 V to 5.5 V, $C_L$ = 50 pF, $R_L$ = 2 kΩ, $T_A$ = MIN to MAX§ | | | | UNIT |
|---|---|---|---|---|---|---|---|
| | | | SN54ALS09 | | SN74ALS09 | | |
| | | | MIN | MAX | MIN | MAX | |
| $t_{PLH}$ | A or B | Y | 20 | 69 | 23 | 54 | ns |
| $t_{PHL}$ | | | 5 | 23 | 5 | 15 | |

§ For conditions shown as MIN or MAX, use the appropriate value specified under recommended operating conditions.

## PARAMETER MEASUREMENT INFORMATION
## SERIES 54ALS/74ALS AND 54AS/74AS DEVICES

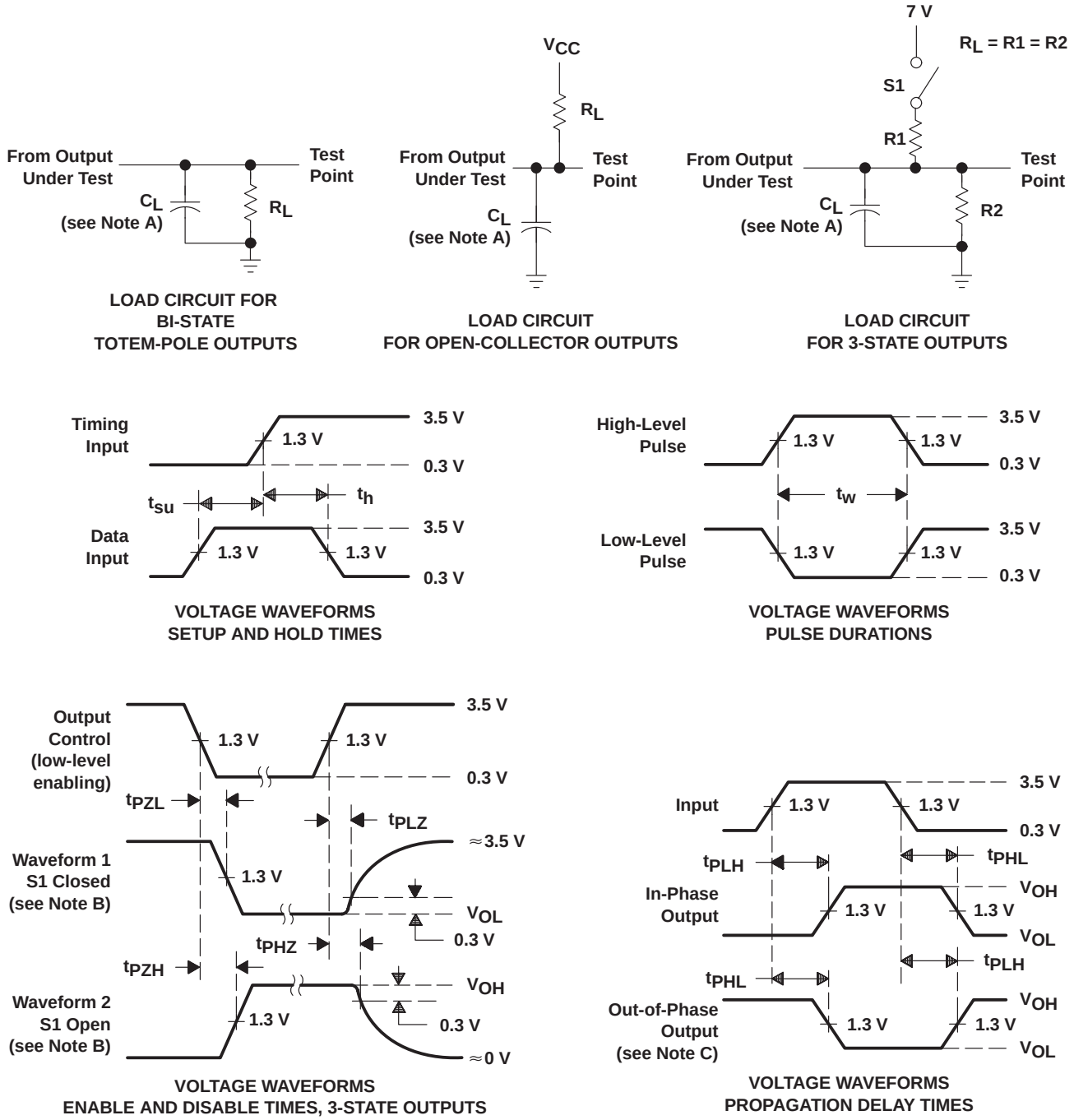


NOTES: A. $C_L$ includes probe and jig capacitance.
B. Waveform 1 is for an output with internal conditions such that the output is low except when disabled by the output control. Waveform 2 is for an output with internal conditions such that the output is high except when disabled by the output control.
C. When measuring propagation delay items of 3-state outputs, switch S1 is open.
D. All input pulses have the following characteristics: PRR ≤ 1 MHz, $t_r = t_f = 2$ ns, duty cycle = 50%.
E. The outputs are measured one at a time with one transition per measurement.

**Figure 1. Load Circuits and Voltage Waveforms**

## PACKAGING INFORMATION

| Orderable part number | Status (1) | Material type (2) | Package \| Pins | Package qty \| Carrier | RoHS (3) | Lead finish/ Ball material (4) | MSL rating/ Peak reflow (5) | Op temp (°C) | Part marking (6) |
|---|---|---|---|---|---|---|---|---|---|
| 84142012A | Active | Production | LCCC (FK) \| 20 | 55 \| TUBE | No | SNPB | N/A for Pkg Type | -55 to 125 | 84142012A SNJ54ALS 09FK |
| 8414201CA | Active | Production | CDIP (J) \| 14 | 25 \| TUBE | No | SNPB | N/A for Pkg Type | -55 to 125 | 8414201CA SNJ54ALS09J |
| SN54ALS09J | Active | Production | CDIP (J) \| 14 | 25 \| TUBE | No | SNPB | N/A for Pkg Type | -55 to 125 | SN54ALS09J |
| SN54ALS09J.A | Active | Production | CDIP (J) \| 14 | 25 \| TUBE | No | SNPB | N/A for Pkg Type | -55 to 125 | SN54ALS09J |
| SN74ALS09D | Obsolete | Production | SOIC (D) \| 14 | - | - | Call TI | Call TI | 0 to 70 | ALS09 |
| SN74ALS09DR | Active | Production | SOIC (D) \| 14 | 2500 \| LARGE T&R | Yes | NIPDAU | Level-1-260C-UNLIM | 0 to 70 | ALS09 |
| SN74ALS09DR.A | Active | Production | SOIC (D) \| 14 | 2500 \| LARGE T&R | Yes | NIPDAU | Level-1-260C-UNLIM | 0 to 70 | ALS09 |
| SN74ALS09N | Last Time Buy | Production | PDIP (N) \| 14 | 25 \| TUBE | Yes | NIPDAU | N/A for Pkg Type | 0 to 70 | SN74ALS09N |
| SN74ALS09N.A | Last Time Buy | Production | PDIP (N) \| 14 | 25 \| TUBE | Yes | NIPDAU | N/A for Pkg Type | 0 to 70 | SN74ALS09N |
| SNJ54ALS09FK | Active | Production | LCCC (FK) \| 20 | 55 \| TUBE | No | SNPB | N/A for Pkg Type | -55 to 125 | 84142012A SNJ54ALS 09FK |
| SNJ54ALS09FK.A | Active | Production | LCCC (FK) \| 20 | 55 \| TUBE | No | SNPB | N/A for Pkg Type | -55 to 125 | 84142012A SNJ54ALS 09FK |
| SNJ54ALS09J | Active | Production | CDIP (J) \| 14 | 25 \| TUBE | No | SNPB | N/A for Pkg Type | -55 to 125 | 8414201CA SNJ54ALS09J |
| SNJ54ALS09J.A | Active | Production | CDIP (J) \| 14 | 25 \| TUBE | No | SNPB | N/A for Pkg Type | -55 to 125 | 8414201CA SNJ54ALS09J |

(1) **Status:** For more details on status, see our product life cycle.

(2) **Material type:** When designated, preproduction parts are prototypes/experimental devices, and are not yet approved or released for full production. Testing and final process, including without limitation quality assurance, reliability performance testing, and/or process qualification, may not yet be complete, and this item is subject to further changes or possible discontinuation. If available for ordering, purchases will be subject to an additional waiver at checkout, and are intended for early internal evaluation purposes only. These items are sold without warranties of any kind.

(3) **RoHS values:** Yes, No, RoHS Exempt. See the TI RoHS Statement for additional information and value definition.

(4) **Lead finish/Ball material:** Parts may have multiple material finish options. Finish options are separated by a vertical ruled line. Lead finish/Ball material values may wrap to two lines if the finish value exceeds the maximum column width.

(5) **MSL rating/Peak reflow:** The moisture sensitivity level ratings and peak solder (reflow) temperatures. In the event that a part has multiple moisture sensitivity ratings, only the lowest level per JEDEC standards is shown. Refer to the shipping label for the actual reflow temperature that will be used to mount the part to the printed circuit board.

(6) **Part marking:** There may be an additional marking, which relates to the logo, the lot trace code information, or the environmental category of the part.

Multiple part markings will be inside parentheses. Only one part marking contained in parentheses and separated by a "~" will appear on a part. If a line is indented then it is a continuation of the previous line and the two combined represent the entire part marking for that device.

**Important Information and Disclaimer:**The information provided on this page represents TI's knowledge and belief as of the date that it is provided. TI bases its knowledge and belief on information provided by third parties, and makes no representation or warranty as to the accuracy of such information. Efforts are underway to better integrate information from third parties. TI has taken and continues to take reasonable steps to provide representative and accurate information but may not have conducted destructive testing or chemical analysis on incoming materials and chemicals. TI and TI suppliers consider certain information to be proprietary, and thus CAS numbers and other limited information may not be available for release.

In no event shall TI's liability arising out of such information exceed the total purchase price of the TI part(s) at issue in this document sold by TI to Customer on an annual basis.

**OTHER QUALIFIED VERSIONS OF SN54ALS09, SN74ALS09 :**

- Catalog : SN74ALS09
- Military : SN54ALS09

NOTE: Qualified Version Definitions:

- Catalog - TI's standard catalog product
- Military - QML certified for Military and Defense Applications

## TAPE AND REEL INFORMATION

**REEL DIMENSIONS**

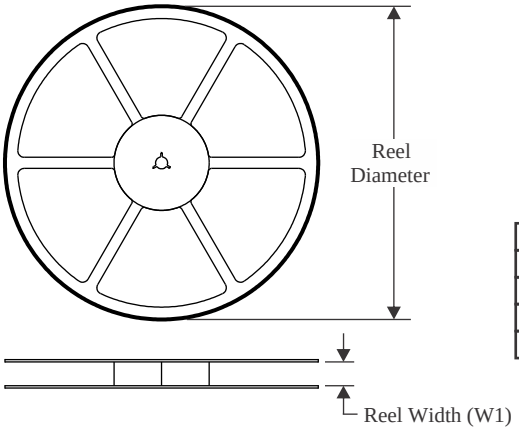


**TAPE DIMENSIONS**

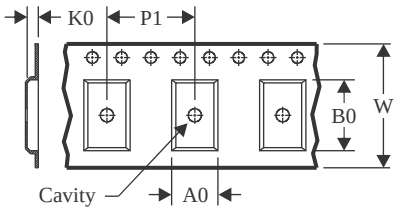


| | |
|---|---|
| A0 | Dimension designed to accommodate the component width |
| B0 | Dimension designed to accommodate the component length |
| K0 | Dimension designed to accommodate the component thickness |
| W | Overall width of the carrier tape |
| P1 | Pitch between successive cavity centers |

**QUADRANT ASSIGNMENTS FOR PIN 1 ORIENTATION IN TAPE**

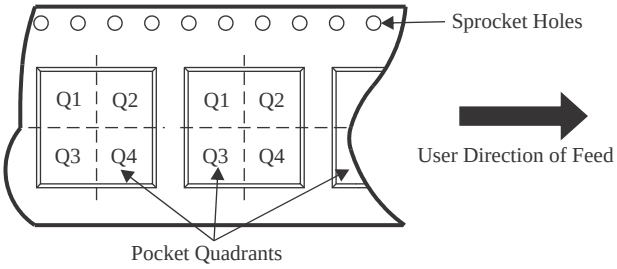


*All dimensions are nominal

| Device | Package Type | Package Drawing | Pins | SPQ | Reel Diameter (mm) | Reel Width W1 (mm) | A0 (mm) | B0 (mm) | K0 (mm) | P1 (mm) | W (mm) | Pin1 Quadrant |
|---|---|---|---|---|---|---|---|---|---|---|---|---|
| SN74ALS09DR | SOIC | D | 14 | 2500 | 330.0 | 16.4 | 6.5 | 9.0 | 2.1 | 8.0 | 16.0 | Q1 |

TAPE AND REEL BOX DIMENSIONS

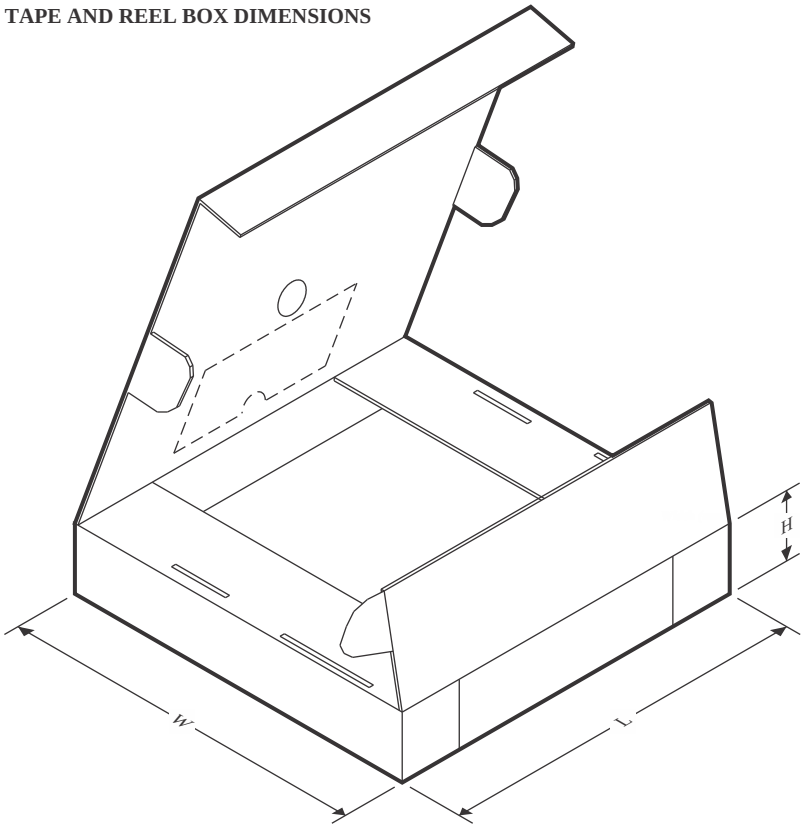


*All dimensions are nominal

| Device | Package Type | Package Drawing | Pins | SPQ | Length (mm) | Width (mm) | Height (mm) |
|---|---|---|---|---|---|---|---|
| SN74ALS09DR | SOIC | D | 14 | 2500 | 353.0 | 353.0 | 32.0 |

## TUBE

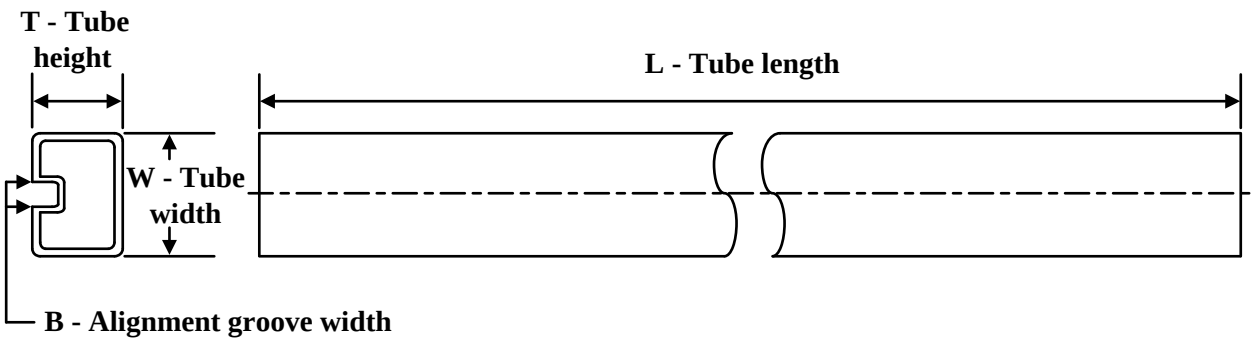


*All dimensions are nominal

| Device | Package Name | Package Type | Pins | SPQ | L (mm) | W (mm) | T (µm) | B (mm) |
|---|---|---|---|---|---|---|---|---|
| 84142012A | FK | LCCC | 20 | 55 | 506.98 | 12.06 | 2030 | NA |
| SN74ALS09N | N | PDIP | 14 | 25 | 506 | 13.97 | 11230 | 4.32 |
| SN74ALS09N | N | PDIP | 14 | 25 | 506 | 13.97 | 11230 | 4.32 |
| SN74ALS09N.A | N | PDIP | 14 | 25 | 506 | 13.97 | 11230 | 4.32 |
| SN74ALS09N.A | N | PDIP | 14 | 25 | 506 | 13.97 | 11230 | 4.32 |
| SNJ54ALS09FK | FK | LCCC | 20 | 55 | 506.98 | 12.06 | 2030 | NA |
| SNJ54ALS09FK.A | FK | LCCC | 20 | 55 | 506.98 | 12.06 | 2030 | NA |

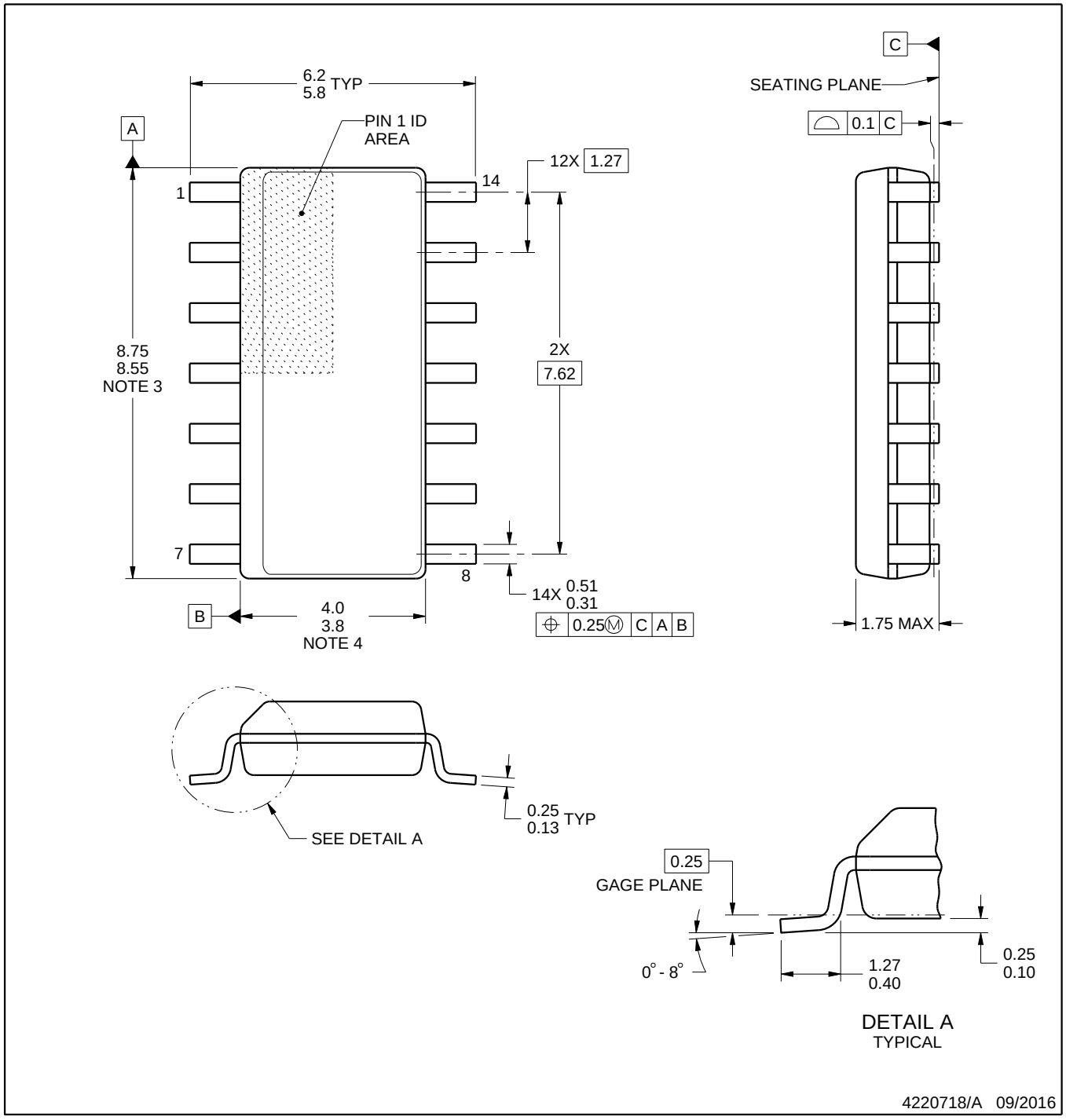


NOTES:

1. All linear dimensions are in millimeters. Dimensions in parenthesis are for reference only. Dimensioning and tolerancing per ASME Y14.5M.
2. This drawing is subject to change without notice.
3. This dimension does not include mold flash, protrusions, or gate burrs. Mold flash, protrusions, or gate burrs shall not exceed 0.15 mm, per side.
4. This dimension does not include interlead flash. Interlead flash shall not exceed 0.43 mm, per side.
5. Reference JEDEC registration MS-012, variation AB.

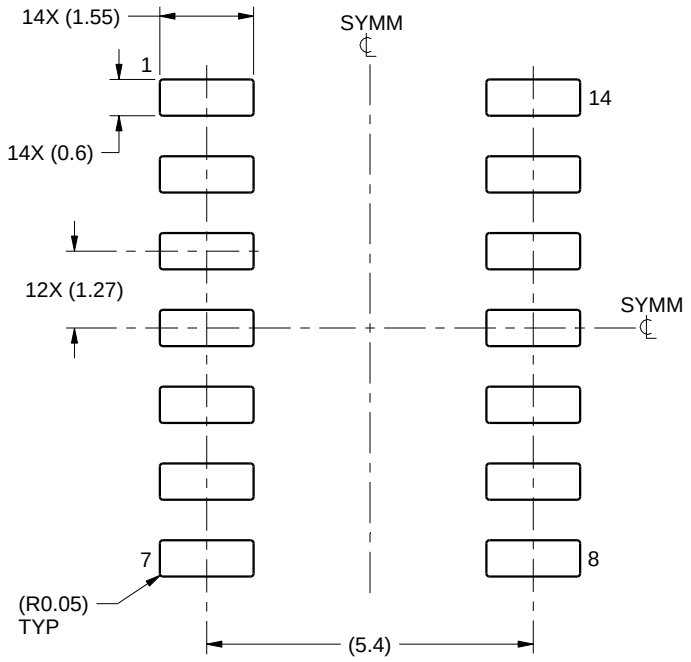


LAND PATTERN EXAMPLE
SCALE:8X

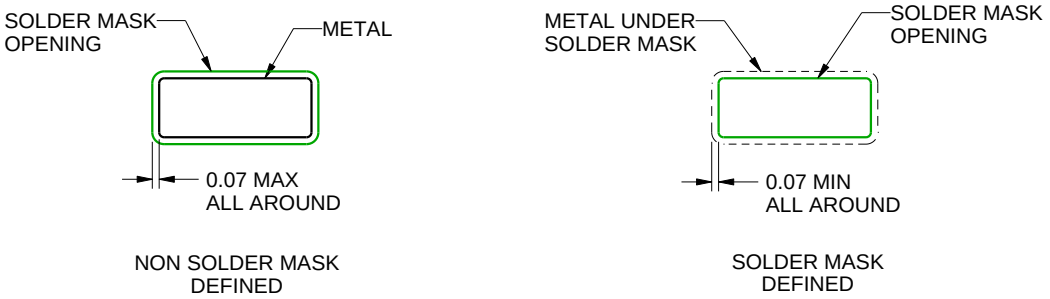


SOLDER MASK DETAILS

4220718/A 09/2016

NOTES: (continued)

6. Publication IPC-7351 may have alternate designs.
7. Solder mask tolerances between and around signal pads can vary based on board fabrication site.

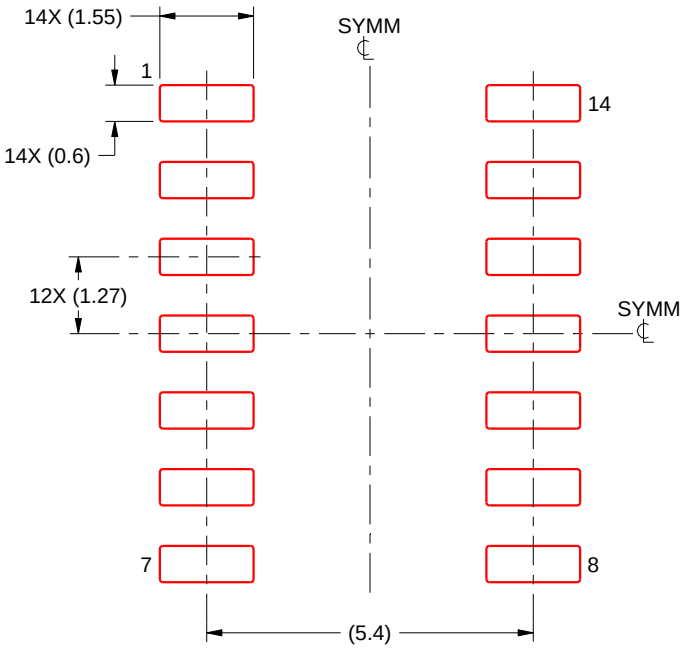


SOLDER PASTE EXAMPLE
BASED ON 0.125 mm THICK STENCIL
SCALE:8X

4220718/A 09/2016

NOTES: (continued)

8. Laser cutting apertures with trapezoidal walls and rounded corners may offer better paste release. IPC-7525 may have alternate design recommendations.
9. Board assembly site may have different recommendations for stencil design.

# GENERIC PACKAGE VIEW

## FK 20

## LCCC - 2.03 mm max height

**8.89 x 8.89, 1.27 mm pitch**

LEADLESS CERAMIC CHIP CARRIER

This image is a representation of the package family, actual package may vary.
Refer to the product data sheet for package details.

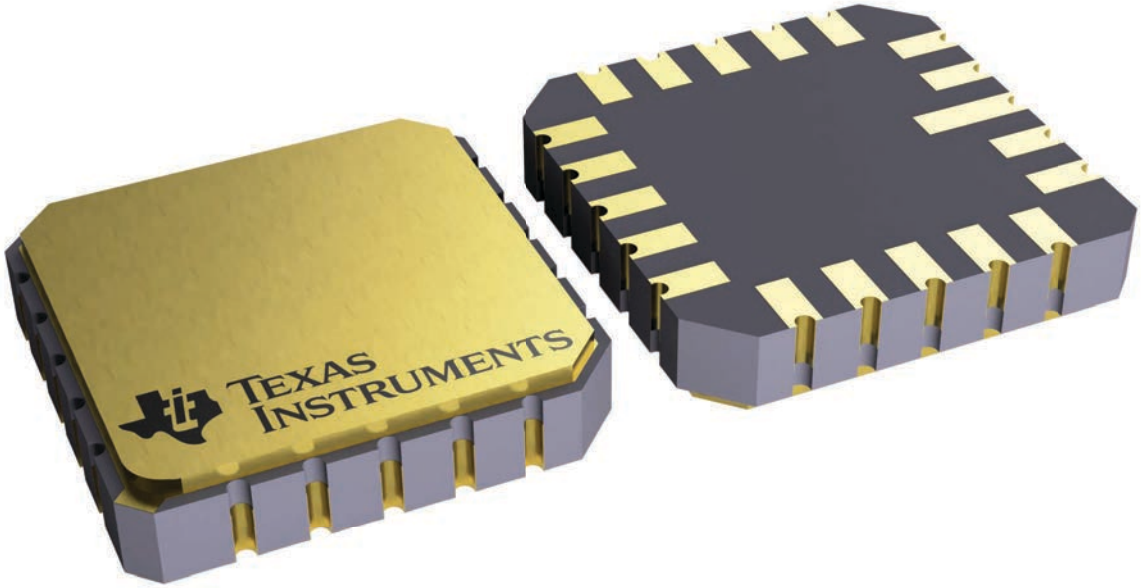


4229370VA\

# J 14 CDIP - 5.08 mm max height

CERAMIC DUAL IN LINE PACKAGE

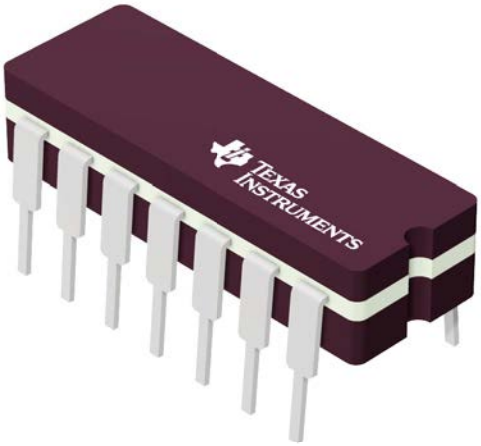


Images above are just a representation of the package family, actual package may vary.
Refer to the product data sheet for package details.

4040083-5/G

# PACKAGE OUTLINE

## J0014A

## CDIP - 5.08 mm max height

CERAMIC DUAL IN LINE PACKAGE

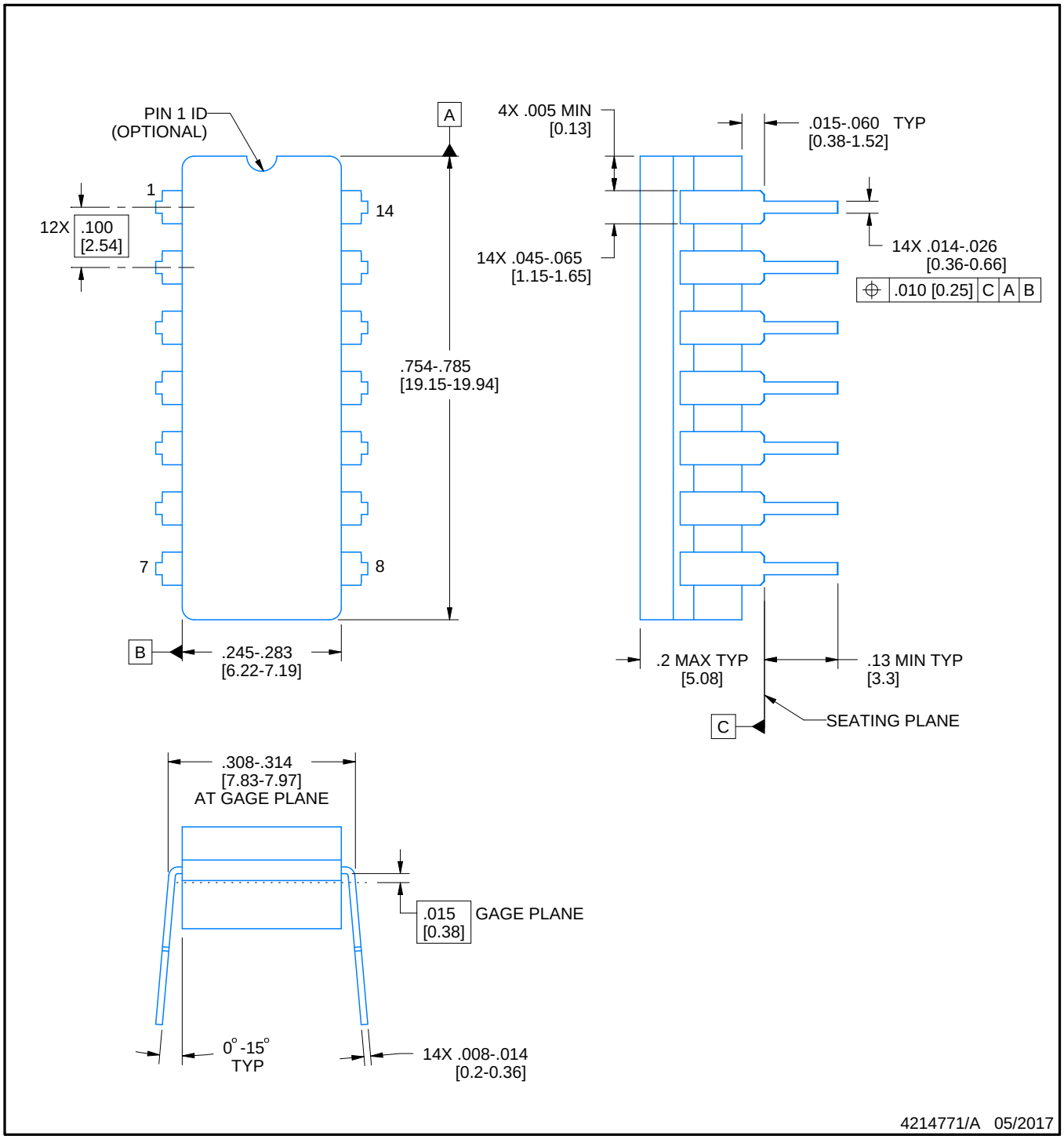


NOTES:

1. All controlling linear dimensions are in inches. Dimensions in brackets are in millimeters. Any dimension in brackets or parenthesis are for reference only. Dimensioning and tolerancing per ASME Y14.5M.
2. This drawing is subject to change without notice.
3. This package is hermitically sealed with a ceramic lid using glass frit.
4. Index point is provided on cap for terminal identification only and on press ceramic glass frit seal only.
5. Falls within MIL-STD-1835 and GDIP1-T14.

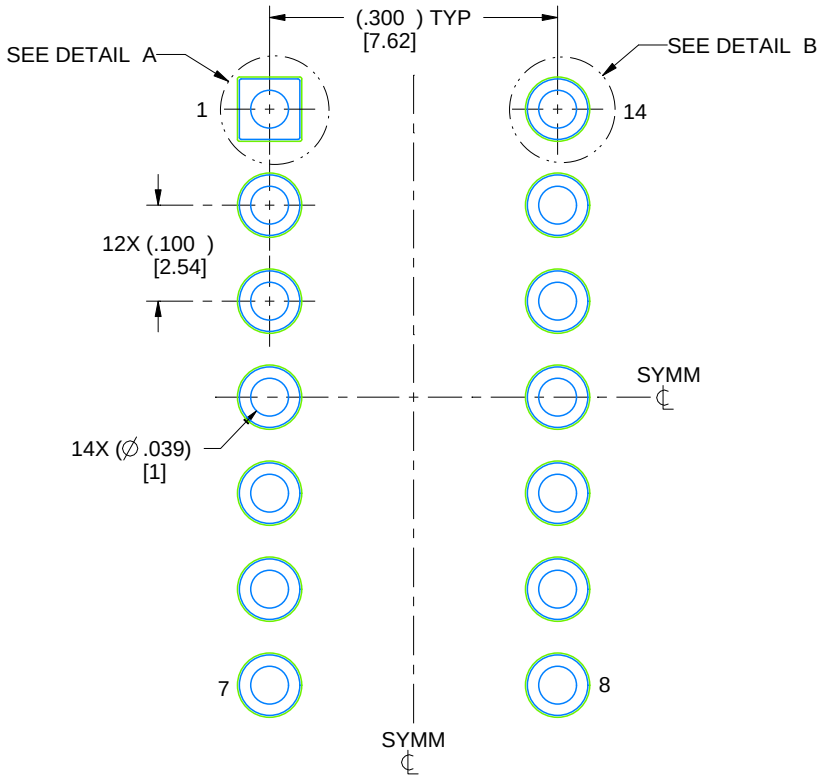


LAND PATTERN EXAMPLE
NON-SOLDER MASK DEFINED
SCALE: 5X

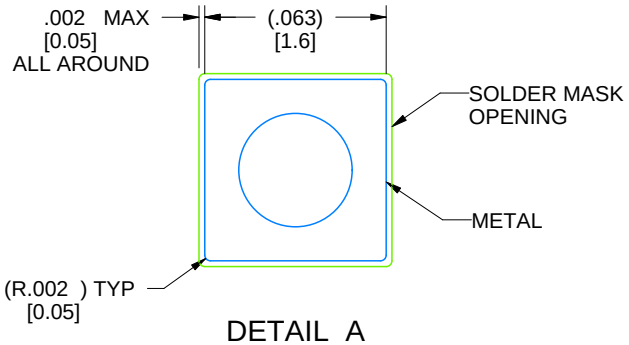


DETAIL A
SCALE: 15X

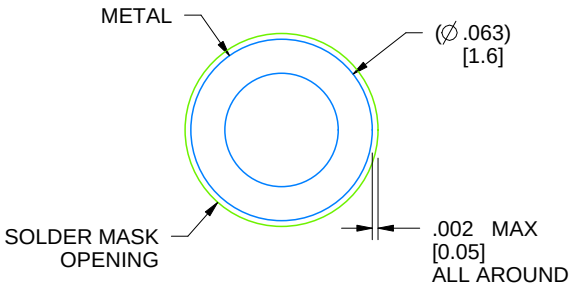


DETAIL B
13X, SCALE: 15X

4214771/A 05/2017

## N (R–PDIP–T**) PLASTIC DUAL–IN–LINE PACKAGE

16 PINS SHOWN

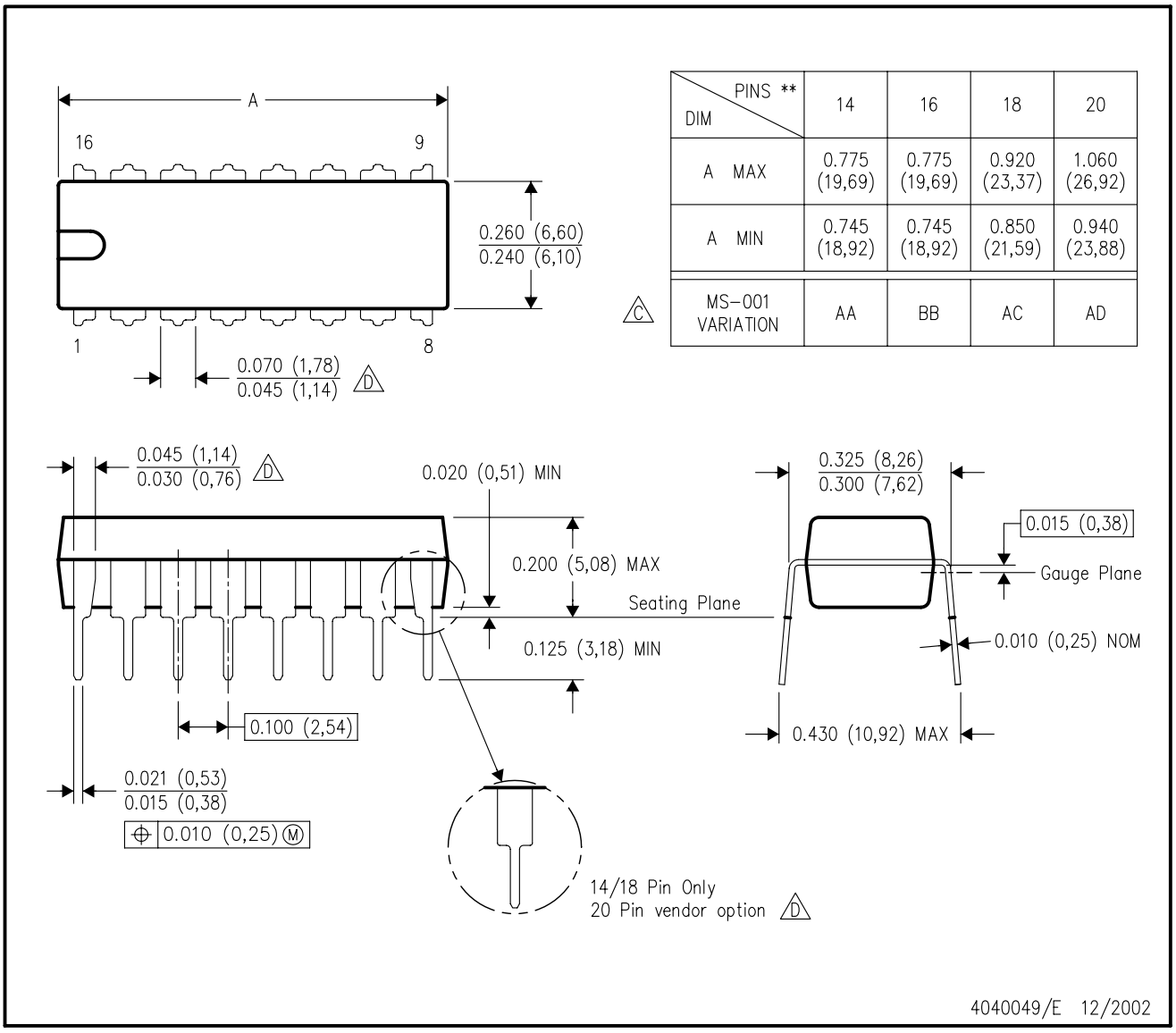


| DIM \ PINS ** | 14 | 16 | 18 | 20 |
|---|---|---|---|---|
| A MAX | 0.775 (19,69) | 0.775 (19,69) | 0.920 (23,37) | 1.060 (26,92) |
| A MIN | 0.745 (18,92) | 0.745 (18,92) | 0.850 (21,59) | 0.940 (23,88) |
| MS–001 VARIATION (C) | AA | BB | AC | AD |

NOTES:
A. All linear dimensions are in inches (millimeters).
B. This drawing is subject to change without notice.
C. Falls within JEDEC MS–001, except 18 and 20 pin minimum body length (Dim A).
D. The 20 pin end lead shoulder width is a vendor option, either half or full width.

# IMPORTANT NOTICE AND DISCLAIMER

TI PROVIDES TECHNICAL AND RELIABILITY DATA (INCLUDING DATASHEETS), DESIGN RESOURCES (INCLUDING REFERENCE DESIGNS), APPLICATION OR OTHER DESIGN ADVICE, WEB TOOLS, SAFETY INFORMATION, AND OTHER RESOURCES “AS IS” AND WITH ALL FAULTS, AND DISCLAIMS ALL WARRANTIES, EXPRESS AND IMPLIED, INCLUDING WITHOUT LIMITATION ANY IMPLIED WARRANTIES OF MERCHANTABILITY, FITNESS FOR A PARTICULAR PURPOSE OR NON-INFRINGEMENT OF THIRD PARTY INTELLECTUAL PROPERTY RIGHTS.

These resources are intended for skilled developers designing with TI products. You are solely responsible for (1) selecting the appropriate TI products for your application, (2) designing, validating and testing your application, and (3) ensuring your application meets applicable standards, and any other safety, security, regulatory or other requirements.

These resources are subject to change without notice. TI grants you permission to use these resources only for development of an application that uses the TI products described in the resource. Other reproduction and display of these resources is prohibited. No license is granted to any other TI intellectual property right or to any third party intellectual property right. TI disclaims responsibility for, and you fully indemnify TI and its representatives against any claims, damages, costs, losses, and liabilities arising out of your use of these resources.

TI’s products are provided subject to TI’s Terms of Sale, TI’s General Quality Guidelines, or other applicable terms available either on ti.com or provided in conjunction with such TI products. TI’s provision of these resources does not expand or otherwise alter TI’s applicable warranties or warranty disclaimers for TI products. Unless TI explicitly designates a product as custom or customer-specified, TI products are standard, catalog, general purpose devices.

TI objects to and rejects any additional or different terms you may propose.

Copyright © 2026, Texas Instruments Incorporated

Last updated 10/2025