- Dual Versions of the Popular '90A, 'LS90 and '93A, 'LS93
- '390, 'LS390 . . . Individual Clocks for A and B Flip-Flops Provide Dual ÷ 2 and ÷ 5 Counters
- '393, 'LS393 . . . Dual 4-Bit Binary Counter with Individual Clocks
- All Have Direct Clear for Each 4-Bit Counter
- Dual 4-Bit Versions Can Significantly Improve System Densities by Reducing Counter Package Count by 50%
- Typical Maximum Count Frequency . . . 35 MHz
- Buffered Outputs Reduce Possibility of Collector Commutation

description

Each of these monolithic circuits contains eight master-slave flip-flops and additional gating to implement two individual four-bit counters in a single package. The '390 and 'LS390 incorporate dual divide-by-two and divide-by-five counters, which can be used to implement cycle lengths equal to any whole and/or cumulative multiples of 2 and/or 5 up to divide-by-100. When connected as a bi-quinary counter, the separate divide-by-two circuit can be used to provide symmetry (a square wave) at the final output stage. The '393 and 'LS393 each comprise two independent four-bit binary counters each having a clear and a clock input. N-bit binary counters can be implemented with each package providing the capability of divide-by-256. The '390, 'LS390, '393, and 'LS393 have parallel outputs from each counter stage so that any submultiple of the input count frequency is available for system-timing signals.

Series 54 and Series 54LS circuits are characterized for operation over the full military temperature range of −55°C to 125°C; Series 74 and Series 74LS circuits are characterized for operation from 0°C to 70°C.

SN54390, SN54LS390 . . . J OR W PACKAGE
SN74390 . . . N PACKAGE
SN74LS390 . . . D OR N PACKAGE
(TOP VIEW)

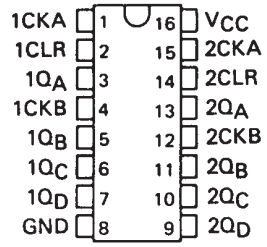

SN54LS390 . . . FK PACKAGE
(TOP VIEW)

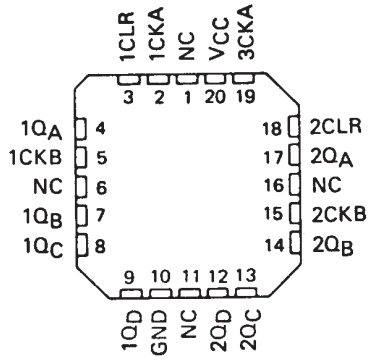

SN54393, SN54LS393 . . . J OR W PACKAGE
SN74393 . . . N PACKAGE
SN74LS393 . . . D OR N PACKAGE
(TOP VIEW)

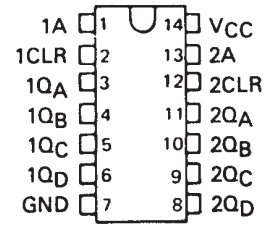

SN54LS393 . . . FK PACKAGE
(TOP VIEW)

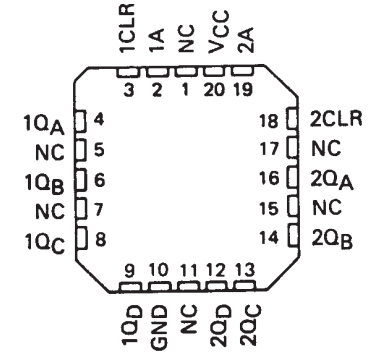

NC - No internal connection

PRODUCTION DATA information is current as of publication date. Products conform to specifications per the terms of Texas Instruments standard warranty. Production processing does not necessarily include testing of all parameters.

Copyright © 1988, Texas Instruments Incorporated

FUNCTION TABLES

'390, 'LS390 BCD COUNT SEQUENCE (EACH COUNTER) (See Note A)

COUNT	OUTPUT			
	Q_D	Q_C	Q_B	Q_A
0	L	L	L	L
1	L	L	L	H
2	L	L	H	L
3	L	L	H	H
4	L	H	L	L
5	L	H	L	H
6	L	H	H	L
7	L	H	H	H
8	H	L	L	L
9	H	L	L	H

'390, 'LS390 BI-QUINARY (5-2) (EACH COUNTER) (See Note B)

COUNT	OUTPUT			
	Q_A	Q_D	Q_C	Q_B
0	L	L	L	L
1	L	L	L	H
2	L	L	H	L
3	L	L	H	H
4	L	H	L	L
5	H	L	L	L
6	H	L	L	H
7	H	L	H	L
8	H	L	H	H
9	H	H	L	L

'393, 'LS393 COUNT SEQUENCE (EACH COUNTER)

COUNT	OUTPUT			
	Q_D	Q_C	Q_B	Q_A
0	L	L	L	L
1	L	L	L	H
2	L	L	H	L
3	L	L	H	H
4	L	H	L	L
5	L	H	L	H
6	L	H	H	L
7	L	H	H	H
8	H	L	L	L
9	H	L	L	H
10	H	L	H	L
11	H	L	H	H
12	H	H	L	L
13	H	H	L	H
14	H	H	H	L
15	H	H	H	H

NOTES: A. Output Q_A is connected to input B for BCD count.
B. Output Q_D is connected to input A for bi-quinary count.
C. H = high level, L = low level.

logic diagrams (positive logic)

'390, 'LS390

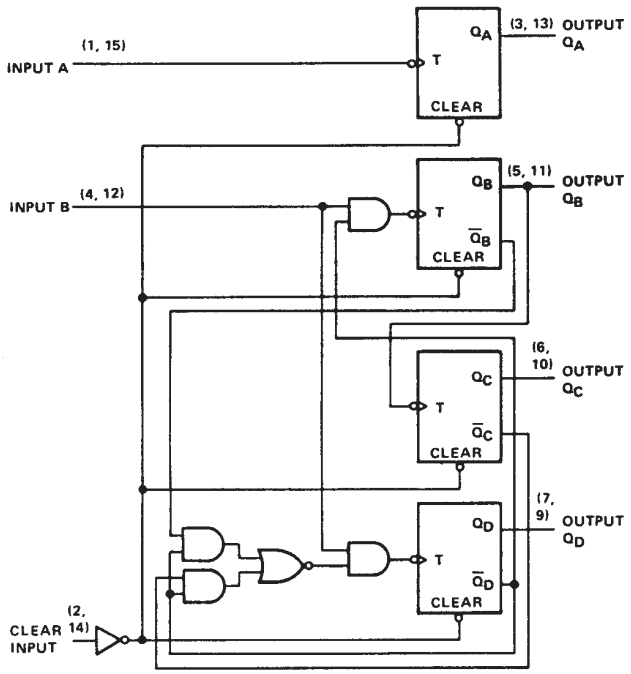

logic symbols†

'390, 'LS390

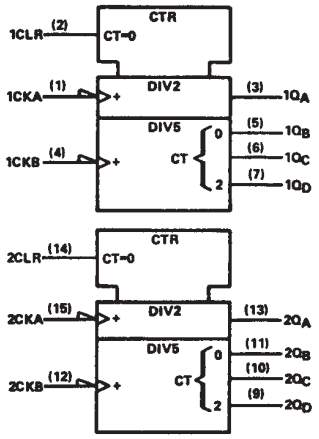

'393, 'LS393

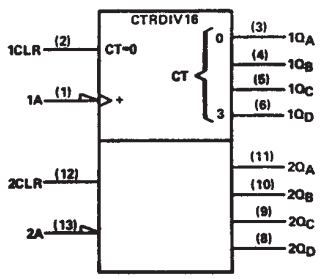

†These symbols are in accordance with ANSI/IEEE Std. 91-1984 and IEC Publication 617-12.

Pin numbers shown are for D, J, N, and W packages.

logic diagrams (continued)

'393, 'LS393

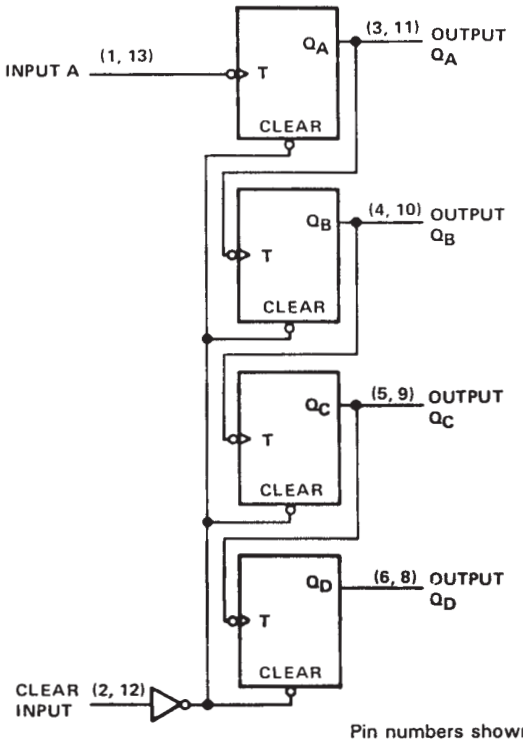

Pin numbers shown are for D, J, N and W packages.

schematics of inputs and outputs

'390, '393

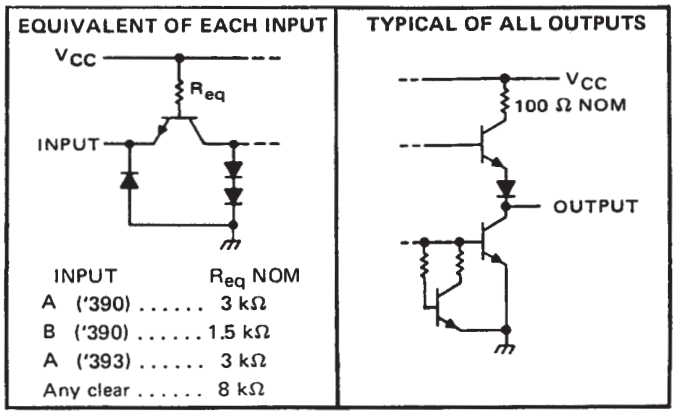

INPUT	R_{eq} NOM
A ('390)	3 kΩ
B ('390)	1.5 kΩ
A ('393)	3 kΩ
Any clear	8 kΩ

'LS390, 'LS393

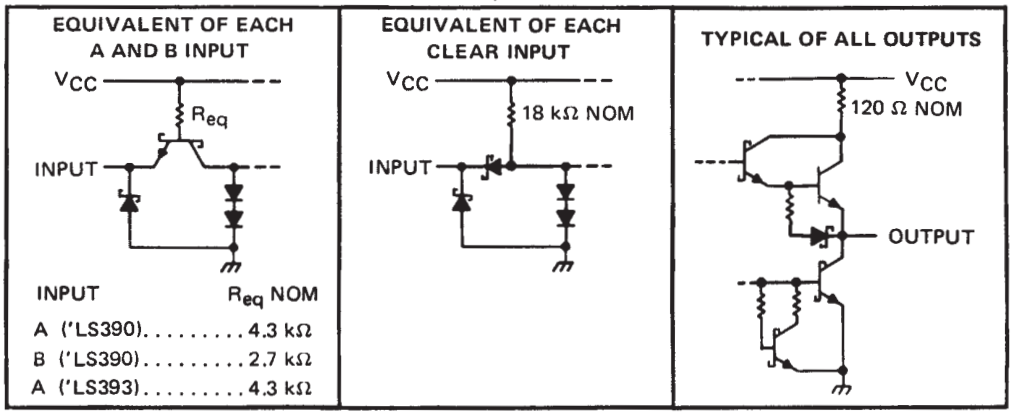

INPUT	R_{eq} NOM
A ('LS390)	4.3 kΩ
B ('LS390)	2.7 kΩ
A ('LS393)	4.3 kΩ

absolute maximum ratings over operating free-air temperature range (unless otherwise noted)

Supply voltage, V_{CC} (see Note 1) . . . . . 7 V
Input voltage . . . . . 5.5 V
Operating free-air temperature range: SN54390, SN54393 . . . . . −55°C to 125°C
SN74390, SN74393 . . . . . 0°C to 70°C
Storage temperature range . . . . . −65°C to 150°C

NOTE 1: Voltage values are with respect to network ground terminal.

recommended operating conditions

		SN54390 SN54393			SN74390 SN74393			UNIT
		MIN	NOM	MAX	MIN	NOM	MAX	
Supply voltage, V_{CC}		4.5	5	5.5	4.75	5	5.25	V
High-level output current, I_{OH}				−800			−800	μA
Low-level output current, I_{OL}				16			16	mA
Count frequency, f_{count}	A input	0		25	0		25	MHz
	B input	0		20	0		20	
Pulse width, t_w	A input high or low	20			20			ns
	B input high or low	25			25			
	Clear high	20			20			
Clear inactive-state setup time, t_{su}		25↓			25↓			ns
Operating free-air temperature, T_A		−55		125	0		70	°C

↓ The arrow indicates that the falling edge of the clock pulse is used for reference.

electrical characteristics over recommended operating free-air temperature range (unless otherwise noted)

PARAMETER			TEST CONDITIONS†		'390 MIN	'390 TYP‡	'390 MAX	'393 MIN	'393 TYP‡	'393 MAX	UNIT
V_{IH}	High-level input voltage				2			2			V
V_{IL}	Low-level input voltage						0.8			0.8	V
V_{IK}	Input clamp voltage		V_{CC} = MIN, I_I = −12 mA				−1.5			−1.5	V
V_{OH}	High-level output voltage		V_{CC} = MIN, V_{IH} = 2 V, V_{IL} = 0.8 V, I_{OH} = −800 μA		2.4	3.4		2.4	3.4		V
V_{OL}	Low-level output voltage		V_{CC} = MIN, V_{IH} = 2 V, V_{IL} = 0.8 V, I_{OL} = 16 mA¶			0.2	0.4		0.2	0.4	V
I_I	Input current at maximum input voltage		V_{CC} = MAX, V_I = 5.5 V				1			1	mA
I_{IH}	High-level input current	Clear	V_{CC} = MAX, V_I = 2.4 V				40			40	μA
		Input A					80			80	
		Input B					120				
I_{IL}	Low-level input current	Clear	V_{CC} = MAX, V_I = 0.4 V				−1			−1	mA
		Input A					−3.2			−3.2	
		Input B					−4.8				
I_{OS}	Short-circuit output current§		V_{CC} = MAX	SN54'	−20		−57	−20		−57	mA
				SN74'	−18		−57	−18		−57	
I_{CC}	Supply current		V_{CC} = MAX, See Note 2			42	69		38	64	mA

† For conditions shown as MIN or MAX, use the appropriate value specified under recommended operating conditions.
‡ All typical values are at V_{CC} = 5 V, T_A = 25°C.
§ Not more than one output should be shorted at a time.
¶ The Q_A outputs of the '390 are tested at I_{OL} = 16 mA plus the limit value for I_{IL} for the B input. This permits driving the B input while maintaining full fan-out capability.
NOTE 2: I_{CC} is measured with all outputs open, both clear inputs grounded following momentary connection to 4.5 V, and all other inputs grounded.

switching characteristics, V_{CC} = 5 V, T_A = 25°C

PARAMETER	FROM (INPUT)	TO (OUTPUT)	TEST CONDITIONS	'390			'393			UNIT
				MIN	TYP	MAX	MIN	TYP	MAX	
f_{max}	A	Q_A	C_L = 15 pF, R_L = 400 Ω, See Note 3 and Figure 1	25	35		25	35		MHz
	B	Q_B		20	30					
t_{PLH}	A	Q_A			12	20		12	20	ns
t_{PHL}					13	20		13	20	
t_{PLH}	A	Q_C of '390 Q_D of '393			37	60		40	60	ns
t_{PHL}					39	60		40	60	
t_{PLH}	B	Q_B			13	21				ns
t_{PHL}					14	21				
t_{PLH}	B	Q_C			24	39				ns
t_{PHL}					26	39				
t_{PLH}	B	Q_D			13	21				ns
t_{PHL}					14	21				
t_{PHL}	Clear	Any			24	39		24	39	ns

NOTE 3: Load circuits and voltage waveforms are shown in Section 1.

PARAMETER MEASUREMENT INFORMATION

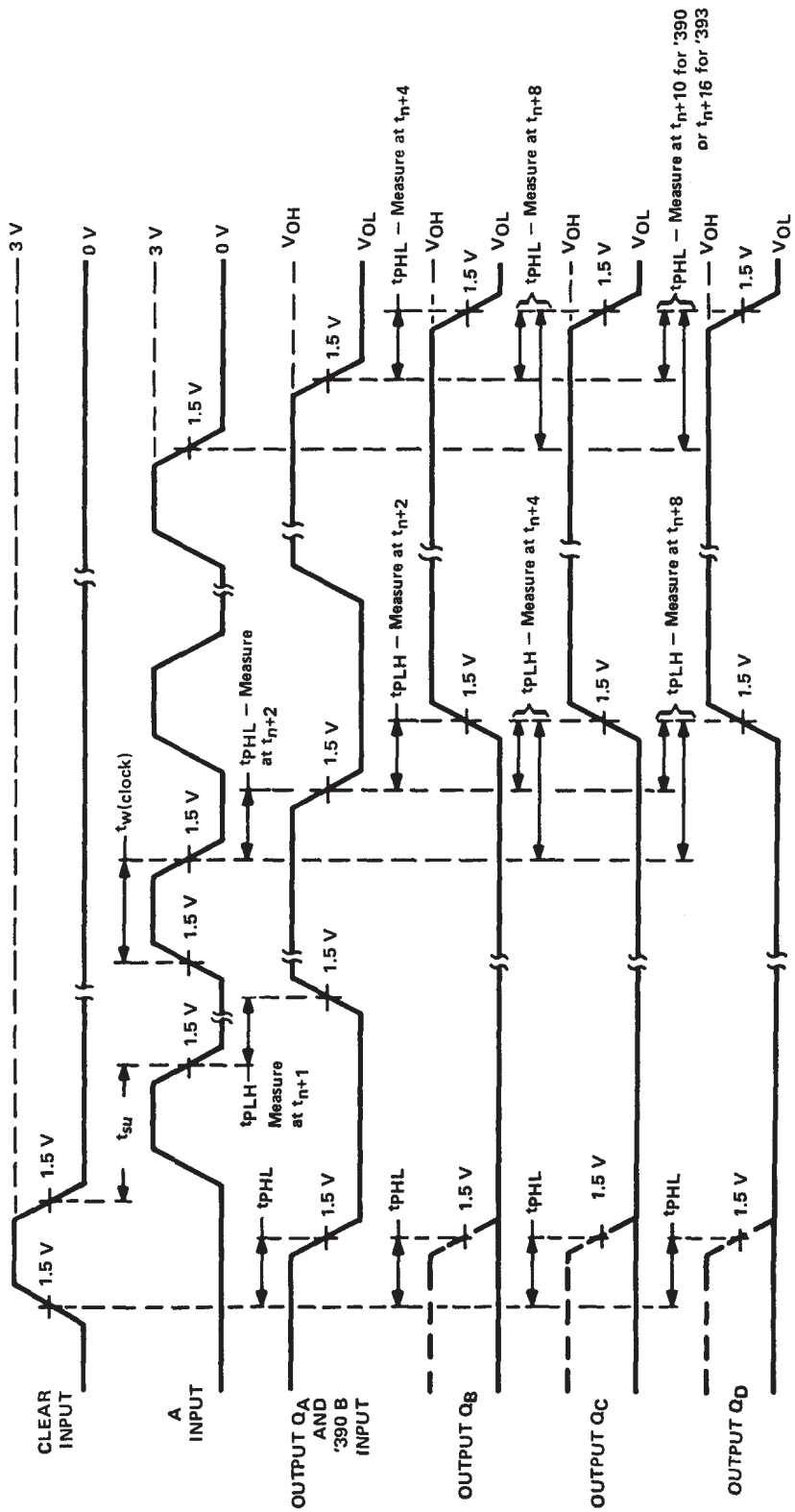

NOTE A: Input pulses are supplied by a generator having the following characteristics $t_r \leq 5$ ns, $t_f \leq 5$ ns, PRR = 1 MHz, duty cycle = 50%, $Z_{out} \approx 50$ ohms.

FIGURE 1

absolute maximum ratings over operating free-air temperature range (unless otherwise noted)

Supply voltage, V_{CC} (see Note 1) . . . . . 7 V
Clear input voltage . . . . . 7 V
Any A or B clock input voltage . . . . . 5.5 V
Operating free-air temperature range: SN54LS390, SN54LS393 . . . . . −55°C to 125°C
SN74LS390, SN74LS393 . . . . . 0°C to 70°C
Storage temperature range . . . . . −65°C to 150°C

NOTE 1: Voltage values are with respect to network ground terminal.

recommended operating conditions

		SN54LS390 SN54LS393			SN74LS390 SN74LS393			UNIT
		MIN	NOM	MAX	MIN	NOM	MAX	
Supply voltage, V_{CC}		4.5	5	5.5	4.75	5	5.25	V
High-level output current, I_{OH}				−400			−400	μA
Low-level output current, I_{OL}				4			8	mA
Count frequency, f_{count}	A input	0		25	0		25	MHz
	B input	0		12.5	0		12.5	
Pulse width, t_w	A input high or low	20			20			ns
	B input high or low	40			40			
	Clear high	20			20			
Clear inactive-state setup time, t_{su}		25↓			25↓			ns
Operating free-air temperature, T_A		−55		125	0		70	°C

↓ The arrow indicates that the falling edge of the clock pulse is used for reference.

electrical characteristics over recommended operating free-air temperature range (unless otherwise noted)

PARAMETER			TEST CONDITIONS†		SN54LS'			SN74LS'			UNIT
					MIN	TYP‡	MAX	MIN	TYP‡	MAX	
V_{IH}	High-level input voltage				2			2			V
V_{IL}	Low-level input voltage						0.7			0.8	V
V_{IK}	Input clamp voltage		V_{CC} = MIN, I_I = −18 mA				−1.5			−1.5	V
V_{OH}	High-level output voltage		V_{CC} = MIN, V_{IH} = 2 V, V_{IL} = V_{IL}max, I_{OH} = −400 μA		2.5	3.4		2.7	3.4		V
V_{OL}	Low-level output voltage		V_{CC} = MIN, V_{IH} = 2 V, V_{IL} = 0.8 V,	I_{OL} = 4 mA¶		0.25	0.4		0.25	0.4	V
				I_{OL} = 8 mA¶					0.35	0.5	
I_I	Input current at maximum input voltage	Clear	V_{CC} = MAX	V_I = 7 V			0.1			0.1	mA
		Input A		V_I = 5.5 V			0.2			0.2	
		Input B					0.4			0.4	
I_{IH}	High-level input current	Clear	V_{CC} = MAX, V_I = 2.7 V				0.02			0.02	mA
		Input A					0.1			0.1	
		Input B					0.2			0.2	
I_{IL}	Low-level input current	Clear	V_{CC} = MAX, V_I = 0.4 V				−0.4			−0.4	mA
		Input A					−1.6			−1.6	
		Input B					−2.4			−2.4	
I_{OS}	Short-circuit output current§		V_{CC} = MAX		−20		−100	−20		−100	mA
I_{CC}	Supply current		V_{CC} = MAX, See Note 2	'LS390		15	26		15	26	mA
				'LS393		15	26		15	26	

† For conditions shown as MIN or MAX, use the appropriate value specified under recommended operating conditions.
‡ All typical values are at V_{CC} = 5 V, T_A = 25°C.
§ Not more than one output should be shorted at a time, and duration of the short-circuit should not exceed one second.
¶ The Q_A outputs of the 'LS390 are tested at I_{OL} = MAX plus the limit value for I_{IL} for the clock B input. This permits driving the clock B input while maintaining full fan-out capability.

NOTE 2: I_{CC} is measured with all outputs open, both clear inputs grounded following momentary connection to 4.5 V, and all other inputs grounded.

switching characteristics, V_{CC} = 5 V, T_A = 25°C

PARAMETER	FROM (INPUT)	TO (OUTPUT)	TEST CONDITIONS	'LS390			'LS393			UNIT
				MIN	TYP	MAX	MIN	TYP	MAX	
f_{max}	A	Q_A	C_L = 15 pF, R_L = 2 kΩ, See Note 4 and Figure 2	25	35		25	35		MHz
	B	Q_B		12.5	20					
t_{PLH}	A	Q_A			12	20		12	20	ns
t_{PHL}					13	20		13	20	
t_{PLH}	A	Q_C of 'LS390 Q_D of 'LS393			37	60		40	60	ns
t_{PHL}					39	60		40	60	
t_{PLH}	B	Q_B			13	21				ns
t_{PHL}					14	21				
t_{PLH}	B	Q_C			24	39				ns
t_{PHL}					26	39				
t_{PLH}	B	Q_D			13	21				ns
t_{PHL}					14	21				
t_{PHL}	Clear	Any			24	39		24	39	ns

NOTE 4: Load circuits and voltage waveforms are shown in Section 1.

PARAMETER MEASUREMENT INFORMATION

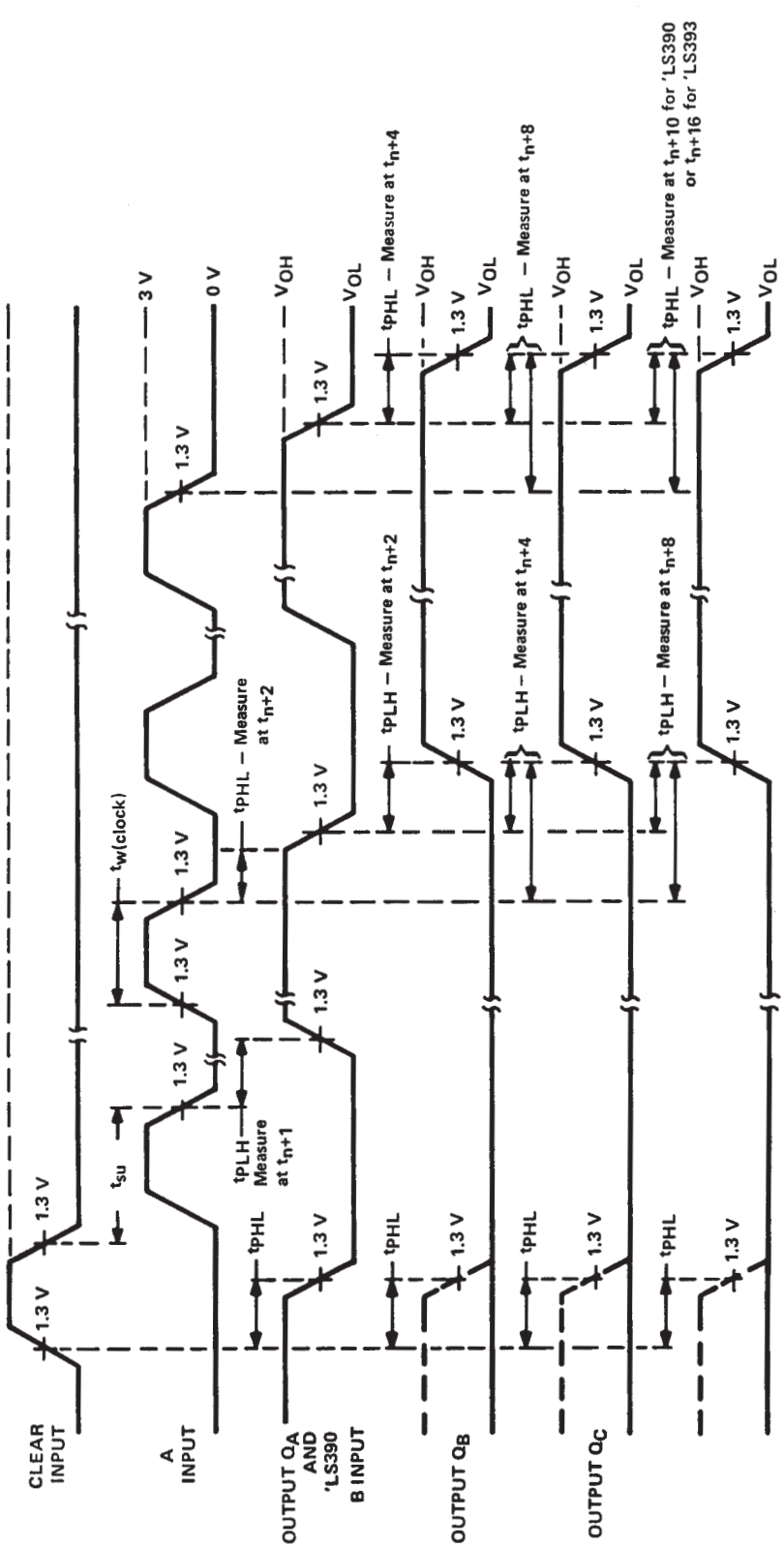

VOLTAGE WAVEFORMS

NOTE A: Input pulses are supplied by a generator having the following characteristics $t_r \leq 15$ ns, $t_f \leq 6$ ns, PRR = 1 MHz, duty cycle = 50 %, $Z_{out} \approx 50$ ohms.

FIGURE 2

PACKAGING INFORMATION

Orderable part number	Status (1)	Material type (2)	Package | Pins	Package qty | Carrier	RoHS (3)	Lead finish/ Ball material (4)	MSL rating/ Peak reflow (5)	Op temp (°C)	Part marking (6)
7802601EA	Active	Production	CDIP (J) | 16	25 | TUBE	No	SNPB	N/A for Pkg Type	-55 to 125	7802601EA SNJ54LS390J
7802601FA	Active	Production	CFP (W) | 16	25 | TUBE	No	SNPB	N/A for Pkg Type	-55 to 125	7802601FA SNJ54LS390W
7802601FA	Active	Production	CFP (W) | 16	25 | TUBE	No	SNPB	N/A for Pkg Type	-55 to 125	7802601FA SNJ54LS390W
JM38510/32701B2A	Active	Production	LCCC (FK) | 20	55 | TUBE	No	SNPB	N/A for Pkg Type	-55 to 125	JM38510/ 32701B2A
JM38510/32701B2A	Active	Production	LCCC (FK) | 20	55 | TUBE	No	SNPB	N/A for Pkg Type	-55 to 125	JM38510/ 32701B2A
JM38510/32701B2A.A	Active	Production	LCCC (FK) | 20	55 | TUBE	No	SNPB	N/A for Pkg Type	-55 to 125	JM38510/ 32701B2A
JM38510/32701B2A.A	Active	Production	LCCC (FK) | 20	55 | TUBE	No	SNPB	N/A for Pkg Type	-55 to 125	JM38510/ 32701B2A
JM38510/32701BEA	Active	Production	CDIP (J) | 16	25 | TUBE	No	SNPB	N/A for Pkg Type	-55 to 125	JM38510/ 32701BEA
JM38510/32701BEA	Active	Production	CDIP (J) | 16	25 | TUBE	No	SNPB	N/A for Pkg Type	-55 to 125	JM38510/ 32701BEA
JM38510/32701BEA.A	Active	Production	CDIP (J) | 16	25 | TUBE	No	SNPB	N/A for Pkg Type	-55 to 125	JM38510/ 32701BEA
JM38510/32701BEA.A	Active	Production	CDIP (J) | 16	25 | TUBE	No	SNPB	N/A for Pkg Type	-55 to 125	JM38510/ 32701BEA
JM38510/32702B2A	Active	Production	LCCC (FK) | 20	55 | TUBE	No	SNPB	N/A for Pkg Type	-55 to 125	JM38510/ 32702B2A
JM38510/32702B2A	Active	Production	LCCC (FK) | 20	55 | TUBE	No	SNPB	N/A for Pkg Type	-55 to 125	JM38510/ 32702B2A
JM38510/32702B2A.A	Active	Production	LCCC (FK) | 20	55 | TUBE	No	SNPB	N/A for Pkg Type	-55 to 125	JM38510/ 32702B2A
JM38510/32702B2A.A	Active	Production	LCCC (FK) | 20	55 | TUBE	No	SNPB	N/A for Pkg Type	-55 to 125	JM38510/ 32702B2A
JM38510/32702BCA	Active	Production	CDIP (J) | 14	25 | TUBE	No	SNPB	N/A for Pkg Type	-55 to 125	JM38510/ 32702BCA

Orderable part number	Status (1)	Material type (2)	Package | Pins	Package qty | Carrier	RoHS (3)	Lead finish/ Ball material (4)	MSL rating/ Peak reflow (5)	Op temp (°C)	Part marking (6)
JM38510/32702BCA	Active	Production	CDIP (J) | 14	25 | TUBE	No	SNPB	N/A for Pkg Type	-55 to 125	JM38510/ 32702BCA
JM38510/32702BCA.A	Active	Production	CDIP (J) | 14	25 | TUBE	No	SNPB	N/A for Pkg Type	-55 to 125	JM38510/ 32702BCA
JM38510/32702BCA.A	Active	Production	CDIP (J) | 14	25 | TUBE	No	SNPB	N/A for Pkg Type	-55 to 125	JM38510/ 32702BCA
JM38510/32702BDA	Active	Production	CFP (W) | 14	25 | TUBE	No	SNPB	N/A for Pkg Type	-55 to 125	JM38510/ 32702BDA
JM38510/32702BDA	Active	Production	CFP (W) | 14	25 | TUBE	No	SNPB	N/A for Pkg Type	-55 to 125	JM38510/ 32702BDA
JM38510/32702BDA.A	Active	Production	CFP (W) | 14	25 | TUBE	No	SNPB	N/A for Pkg Type	-55 to 125	JM38510/ 32702BDA
JM38510/32702BDA.A	Active	Production	CFP (W) | 14	25 | TUBE	No	SNPB	N/A for Pkg Type	-55 to 125	JM38510/ 32702BDA
JM38510/32702SDA	Active	Production	CFP (W) | 14	25 | TUBE	No	SNPB	N/A for Pkg Type	-55 to 125	JM38510/ 32702SDA SNV54LS393W
JM38510/32702SDA	Active	Production	CFP (W) | 14	25 | TUBE	No	SNPB	N/A for Pkg Type	-55 to 125	JM38510/ 32702SDA SNV54LS393W
JM38510/32702SDA.A	Active	Production	CFP (W) | 14	25 | TUBE	No	SNPB	N/A for Pkg Type	-55 to 125	JM38510/ 32702SDA SNV54LS393W
JM38510/32702SDA.A	Active	Production	CFP (W) | 14	25 | TUBE	No	SNPB	N/A for Pkg Type	-55 to 125	JM38510/ 32702SDA SNV54LS393W
M38510/32701B2A	Active	Production	LCCC (FK) | 20	55 | TUBE	No	SNPB	N/A for Pkg Type	-55 to 125	JM38510/ 32701B2A
M38510/32701B2A	Active	Production	LCCC (FK) | 20	55 | TUBE	No	SNPB	N/A for Pkg Type	-55 to 125	JM38510/ 32701B2A
M38510/32701BEA	Active	Production	CDIP (J) | 16	25 | TUBE	No	SNPB	N/A for Pkg Type	-55 to 125	JM38510/ 32701BEA
M38510/32701BEA	Active	Production	CDIP (J) | 16	25 | TUBE	No	SNPB	N/A for Pkg Type	-55 to 125	JM38510/ 32701BEA
M38510/32702B2A	Active	Production	LCCC (FK) | 20	55 | TUBE	No	SNPB	N/A for Pkg Type	-55 to 125	JM38510/ 32702B2A

Orderable part number	Status (1)	Material type (2)	Package | Pins	Package qty | Carrier	RoHS (3)	Lead finish/ Ball material (4)	MSL rating/ Peak reflow (5)	Op temp (°C)	Part marking (6)
M38510/32702B2A	Active	Production	LCCC (FK) | 20	55 | TUBE	No	SNPB	N/A for Pkg Type	-55 to 125	JM38510/ 32702B2A
M38510/32702BCA	Active	Production	CDIP (J) | 14	25 | TUBE	No	SNPB	N/A for Pkg Type	-55 to 125	JM38510/ 32702BCA
M38510/32702BCA	Active	Production	CDIP (J) | 14	25 | TUBE	No	SNPB	N/A for Pkg Type	-55 to 125	JM38510/ 32702BCA
M38510/32702BDA	Active	Production	CFP (W) | 14	25 | TUBE	No	SNPB	N/A for Pkg Type	-55 to 125	JM38510/ 32702BDA
M38510/32702BDA	Active	Production	CFP (W) | 14	25 | TUBE	No	SNPB	N/A for Pkg Type	-55 to 125	JM38510/ 32702BDA
M38510/32702SDA	Active	Production	CFP (W) | 14	25 | TUBE	No	SNPB	N/A for Pkg Type	-55 to 125	JM38510/ 32702SDA SNV54LS393W
M38510/32702SDA	Active	Production	CFP (W) | 14	25 | TUBE	No	SNPB	N/A for Pkg Type	-55 to 125	JM38510/ 32702SDA SNV54LS393W
SN54LS390J	Active	Production	CDIP (J) | 16	25 | TUBE	No	SNPB	N/A for Pkg Type	-55 to 125	SN54LS390J
SN54LS390J	Active	Production	CDIP (J) | 16	25 | TUBE	No	SNPB	N/A for Pkg Type	-55 to 125	SN54LS390J
SN54LS390J.A	Active	Production	CDIP (J) | 16	25 | TUBE	No	SNPB	N/A for Pkg Type	-55 to 125	SN54LS390J
SN54LS390J.A	Active	Production	CDIP (J) | 16	25 | TUBE	No	SNPB	N/A for Pkg Type	-55 to 125	SN54LS390J
SN54LS393J	Active	Production	CDIP (J) | 14	25 | TUBE	No	SNPB	N/A for Pkg Type	-55 to 125	SN54LS393J
SN54LS393J	Active	Production	CDIP (J) | 14	25 | TUBE	No	SNPB	N/A for Pkg Type	-55 to 125	SN54LS393J
SN54LS393J.A	Active	Production	CDIP (J) | 14	25 | TUBE	No	SNPB	N/A for Pkg Type	-55 to 125	SN54LS393J
SN54LS393J.A	Active	Production	CDIP (J) | 14	25 | TUBE	No	SNPB	N/A for Pkg Type	-55 to 125	SN54LS393J
SN74LS390D	Active	Production	SOIC (D) | 16	40 | TUBE	Yes	NIPDAU	Level-1-260C-UNLIM	0 to 70	LS390
SN74LS390D	Active	Production	SOIC (D) | 16	40 | TUBE	Yes	NIPDAU	Level-1-260C-UNLIM	0 to 70	LS390
SN74LS390D.A	Active	Production	SOIC (D) | 16	40 | TUBE	Yes	NIPDAU	Level-1-260C-UNLIM	0 to 70	LS390
SN74LS390D.A	Active	Production	SOIC (D) | 16	40 | TUBE	Yes	NIPDAU	Level-1-260C-UNLIM	0 to 70	LS390
SN74LS390N	Active	Production	PDIP (N) | 16	25 | TUBE	Yes	NIPDAU	N/A for Pkg Type	0 to 70	SN74LS390N
SN74LS390N	Active	Production	PDIP (N) | 16	25 | TUBE	Yes	NIPDAU	N/A for Pkg Type	0 to 70	SN74LS390N
SN74LS390N.A	Active	Production	PDIP (N) | 16	25 | TUBE	Yes	NIPDAU	N/A for Pkg Type	0 to 70	SN74LS390N
SN74LS390N.A	Active	Production	PDIP (N) | 16	25 | TUBE	Yes	NIPDAU	N/A for Pkg Type	0 to 70	SN74LS390N
SN74LS390NE4	Active	Production	PDIP (N) | 16	25 | TUBE	Yes	NIPDAU	N/A for Pkg Type	0 to 70	SN74LS390N

Orderable part number	Status (1)	Material type (2)	Package | Pins	Package qty | Carrier	RoHS (3)	Lead finish/ Ball material (4)	MSL rating/ Peak reflow (5)	Op temp (°C)	Part marking (6)
SN74LS390NE4	Active	Production	PDIP (N) | 16	25 | TUBE	Yes	NIPDAU	N/A for Pkg Type	0 to 70	SN74LS390N
SN74LS390NSR	Active	Production	SOP (NS) | 16	2000 | LARGE T&R	Yes	NIPDAU	Level-1-260C-UNLIM	0 to 70	74LS390
SN74LS390NSR	Active	Production	SOP (NS) | 16	2000 | LARGE T&R	Yes	NIPDAU	Level-1-260C-UNLIM	0 to 70	74LS390
SN74LS390NSR.A	Active	Production	SOP (NS) | 16	2000 | LARGE T&R	Yes	NIPDAU	Level-1-260C-UNLIM	0 to 70	74LS390
SN74LS390NSR.A	Active	Production	SOP (NS) | 16	2000 | LARGE T&R	Yes	NIPDAU	Level-1-260C-UNLIM	0 to 70	74LS390
SN74LS393D	Obsolete	Production	SOIC (D) | 14	-	-	Call TI	Call TI	0 to 70	LS393
SN74LS393D	Obsolete	Production	SOIC (D) | 14	-	-	Call TI	Call TI	0 to 70	LS393
SN74LS393DR	Active	Production	SOIC (D) | 14	2500 | LARGE T&R	Yes	NIPDAU	Level-1-260C-UNLIM	0 to 70	LS393
SN74LS393DR	Active	Production	SOIC (D) | 14	2500 | LARGE T&R	Yes	NIPDAU	Level-1-260C-UNLIM	0 to 70	LS393
SN74LS393DR.A	Active	Production	SOIC (D) | 14	2500 | LARGE T&R	Yes	NIPDAU	Level-1-260C-UNLIM	0 to 70	LS393
SN74LS393DR.A	Active	Production	SOIC (D) | 14	2500 | LARGE T&R	Yes	NIPDAU	Level-1-260C-UNLIM	0 to 70	LS393
SN74LS393N	Active	Production	PDIP (N) | 14	25 | TUBE	Yes	NIPDAU	N/A for Pkg Type	0 to 70	SN74LS393N
SN74LS393N	Active	Production	PDIP (N) | 14	25 | TUBE	Yes	NIPDAU	N/A for Pkg Type	0 to 70	SN74LS393N
SN74LS393N.A	Active	Production	PDIP (N) | 14	25 | TUBE	Yes	NIPDAU	N/A for Pkg Type	0 to 70	SN74LS393N
SN74LS393N.A	Active	Production	PDIP (N) | 14	25 | TUBE	Yes	NIPDAU	N/A for Pkg Type	0 to 70	SN74LS393N
SN74LS393NE4	Active	Production	PDIP (N) | 14	25 | TUBE	Yes	NIPDAU	N/A for Pkg Type	0 to 70	SN74LS393N
SN74LS393NE4	Active	Production	PDIP (N) | 14	25 | TUBE	Yes	NIPDAU	N/A for Pkg Type	0 to 70	SN74LS393N
SN74LS393NSR	Active	Production	SOP (NS) | 14	2000 | LARGE T&R	Yes	NIPDAU	Level-1-260C-UNLIM	0 to 70	74LS393
SN74LS393NSR	Active	Production	SOP (NS) | 14	2000 | LARGE T&R	Yes	NIPDAU	Level-1-260C-UNLIM	0 to 70	74LS393
SN74LS393NSR.A	Active	Production	SOP (NS) | 14	2000 | LARGE T&R	Yes	NIPDAU	Level-1-260C-UNLIM	0 to 70	74LS393
SN74LS393NSR.A	Active	Production	SOP (NS) | 14	2000 | LARGE T&R	Yes	NIPDAU	Level-1-260C-UNLIM	0 to 70	74LS393
SNJ54LS390FK	Active	Production	LCCC (FK) | 20	55 | TUBE	No	SNPB	N/A for Pkg Type	-55 to 125	SNJ54LS 390FK
SNJ54LS390FK	Active	Production	LCCC (FK) | 20	55 | TUBE	No	SNPB	N/A for Pkg Type	-55 to 125	SNJ54LS 390FK
SNJ54LS390FK.A	Active	Production	LCCC (FK) | 20	55 | TUBE	No	SNPB	N/A for Pkg Type	-55 to 125	SNJ54LS 390FK
SNJ54LS390FK.A	Active	Production	LCCC (FK) | 20	55 | TUBE	No	SNPB	N/A for Pkg Type	-55 to 125	SNJ54LS 390FK
SNJ54LS390J	Active	Production	CDIP (J) | 16	25 | TUBE	No	SNPB	N/A for Pkg Type	-55 to 125	7802601EA SNJ54LS390J

Orderable part number	Status (1)	Material type (2)	Package | Pins	Package qty | Carrier	RoHS (3)	Lead finish/ Ball material (4)	MSL rating/ Peak reflow (5)	Op temp (°C)	Part marking (6)
SNJ54LS390J	Active	Production	CDIP (J) | 16	25 | TUBE	No	SNPB	N/A for Pkg Type	-55 to 125	7802601EA SNJ54LS390J
SNJ54LS390J.A	Active	Production	CDIP (J) | 16	25 | TUBE	No	SNPB	N/A for Pkg Type	-55 to 125	7802601EA SNJ54LS390J
SNJ54LS390J.A	Active	Production	CDIP (J) | 16	25 | TUBE	No	SNPB	N/A for Pkg Type	-55 to 125	7802601EA SNJ54LS390J
SNJ54LS390W	Active	Production	CFP (W) | 16	25 | TUBE	No	SNPB	N/A for Pkg Type	-55 to 125	7802601FA SNJ54LS390W
SNJ54LS390W	Active	Production	CFP (W) | 16	25 | TUBE	No	SNPB	N/A for Pkg Type	-55 to 125	7802601FA SNJ54LS390W
SNJ54LS390W.A	Active	Production	CFP (W) | 16	25 | TUBE	No	SNPB	N/A for Pkg Type	-55 to 125	7802601FA SNJ54LS390W
SNJ54LS390W.A	Active	Production	CFP (W) | 16	25 | TUBE	No	SNPB	N/A for Pkg Type	-55 to 125	7802601FA SNJ54LS390W
SNJ54LS393FK	Active	Production	LCCC (FK) | 20	55 | TUBE	No	SNPB	N/A for Pkg Type	-55 to 125	SNJ54LS 393FK
SNJ54LS393FK	Active	Production	LCCC (FK) | 20	55 | TUBE	No	SNPB	N/A for Pkg Type	-55 to 125	SNJ54LS 393FK
SNJ54LS393FK.A	Active	Production	LCCC (FK) | 20	55 | TUBE	No	SNPB	N/A for Pkg Type	-55 to 125	SNJ54LS 393FK
SNJ54LS393FK.A	Active	Production	LCCC (FK) | 20	55 | TUBE	No	SNPB	N/A for Pkg Type	-55 to 125	SNJ54LS 393FK
SNJ54LS393J	Active	Production	CDIP (J) | 14	25 | TUBE	No	SNPB	N/A for Pkg Type	-55 to 125	SNJ54LS393J
SNJ54LS393J	Active	Production	CDIP (J) | 14	25 | TUBE	No	SNPB	N/A for Pkg Type	-55 to 125	SNJ54LS393J
SNJ54LS393J.A	Active	Production	CDIP (J) | 14	25 | TUBE	No	SNPB	N/A for Pkg Type	-55 to 125	SNJ54LS393J
SNJ54LS393J.A	Active	Production	CDIP (J) | 14	25 | TUBE	No	SNPB	N/A for Pkg Type	-55 to 125	SNJ54LS393J
SNJ54LS393W	Active	Production	CFP (W) | 14	25 | TUBE	No	SNPB	N/A for Pkg Type	-55 to 125	SNJ54LS393W
SNJ54LS393W	Active	Production	CFP (W) | 14	25 | TUBE	No	SNPB	N/A for Pkg Type	-55 to 125	SNJ54LS393W
SNJ54LS393W.A	Active	Production	CFP (W) | 14	25 | TUBE	No	SNPB	N/A for Pkg Type	-55 to 125	SNJ54LS393W
SNJ54LS393W.A	Active	Production	CFP (W) | 14	25 | TUBE	No	SNPB	N/A for Pkg Type	-55 to 125	SNJ54LS393W

(1) **Status:** For more details on status, see our product life cycle.

(2) **Material type:** When designated, preproduction parts are prototypes/experimental devices, and are not yet approved or released for full production. Testing and final process, including without limitation quality assurance, reliability performance testing, and/or process qualification, may not yet be complete, and this item is subject to further changes or possible discontinuation. If available for ordering, purchases will be subject to an additional waiver at checkout, and are intended for early internal evaluation purposes only. These items are sold without warranties of any kind.

(3) **RoHS values:** Yes, No, RoHS Exempt. See the TI RoHS Statement for additional information and value definition.

(4) **Lead finish/Ball material:** Parts may have multiple material finish options. Finish options are separated by a vertical ruled line. Lead finish/Ball material values may wrap to two lines if the finish value exceeds the maximum column width.

(5) **MSL rating/Peak reflow:** The moisture sensitivity level ratings and peak solder (reflow) temperatures. In the event that a part has multiple moisture sensitivity ratings, only the lowest level per JEDEC standards is shown. Refer to the shipping label for the actual reflow temperature that will be used to mount the part to the printed circuit board.

(6) **Part marking:** There may be an additional marking, which relates to the logo, the lot trace code information, or the environmental category of the part.

Multiple part markings will be inside parentheses. Only one part marking contained in parentheses and separated by a "~" will appear on a part. If a line is indented then it is a continuation of the previous line and the two combined represent the entire part marking for that device.

Important Information and Disclaimer: The information provided on this page represents TI's knowledge and belief as of the date that it is provided. TI bases its knowledge and belief on information provided by third parties, and makes no representation or warranty as to the accuracy of such information. Efforts are underway to better integrate information from third parties. TI has taken and continues to take reasonable steps to provide representative and accurate information but may not have conducted destructive testing or chemical analysis on incoming materials and chemicals. TI and TI suppliers consider certain information to be proprietary, and thus CAS numbers and other limited information may not be available for release.

In no event shall TI's liability arising out of such information exceed the total purchase price of the TI part(s) at issue in this document sold by TI to Customer on an annual basis.

OTHER QUALIFIED VERSIONS OF SN54LS390, SN54LS393, SN54LS393-SP, SN74LS390, SN74LS393 :

- Catalog : SN74LS390, SN74LS393, SN54LS393
- Military : SN54LS390, SN54LS393
- Space : SN54LS393-SP

NOTE: Qualified Version Definitions:

- Catalog - TI's standard catalog product
- Military - QML certified for Military and Defense Applications

- Space - Radiation tolerant, ceramic packaging and qualified for use in Space-based application

TAPE AND REEL INFORMATION

REEL DIMENSIONS

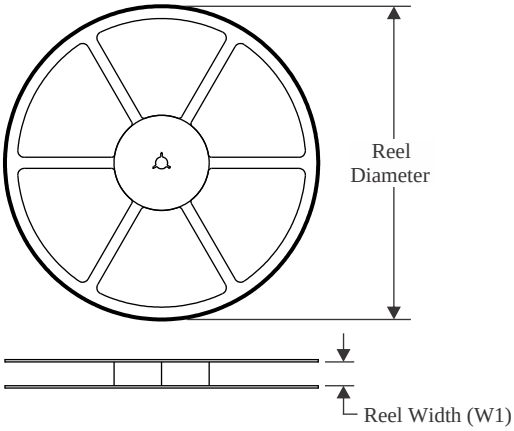

TAPE DIMENSIONS

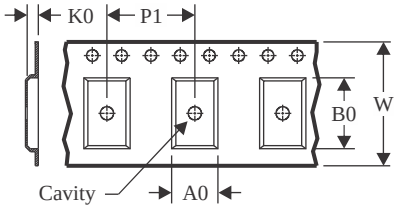

A0	Dimension designed to accommodate the component width
B0	Dimension designed to accommodate the component length
K0	Dimension designed to accommodate the component thickness
W	Overall width of the carrier tape
P1	Pitch between successive cavity centers

QUADRANT ASSIGNMENTS FOR PIN 1 ORIENTATION IN TAPE

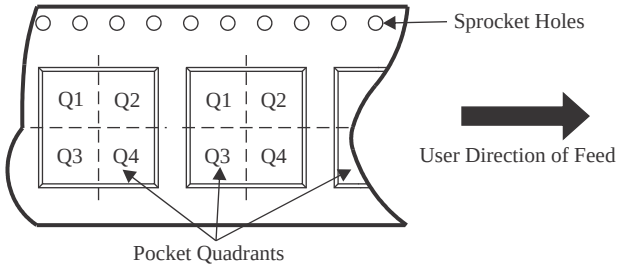

*All dimensions are nominal

Device	Package Type	Package Drawing	Pins	SPQ	Reel Diameter (mm)	Reel Width W1 (mm)	A0 (mm)	B0 (mm)	K0 (mm)	P1 (mm)	W (mm)	Pin1 Quadrant
SN74LS390NSR	SOP	NS	16	2000	330.0	16.4	8.1	10.4	2.5	12.0	16.0	Q1
SN74LS393DR	SOIC	D	14	2500	330.0	16.4	6.5	9.0	2.1	8.0	16.0	Q1
SN74LS393NSR	SOP	NS	14	2000	330.0	16.4	8.1	10.4	2.5	12.0	16.0	Q1

TAPE AND REEL BOX DIMENSIONS

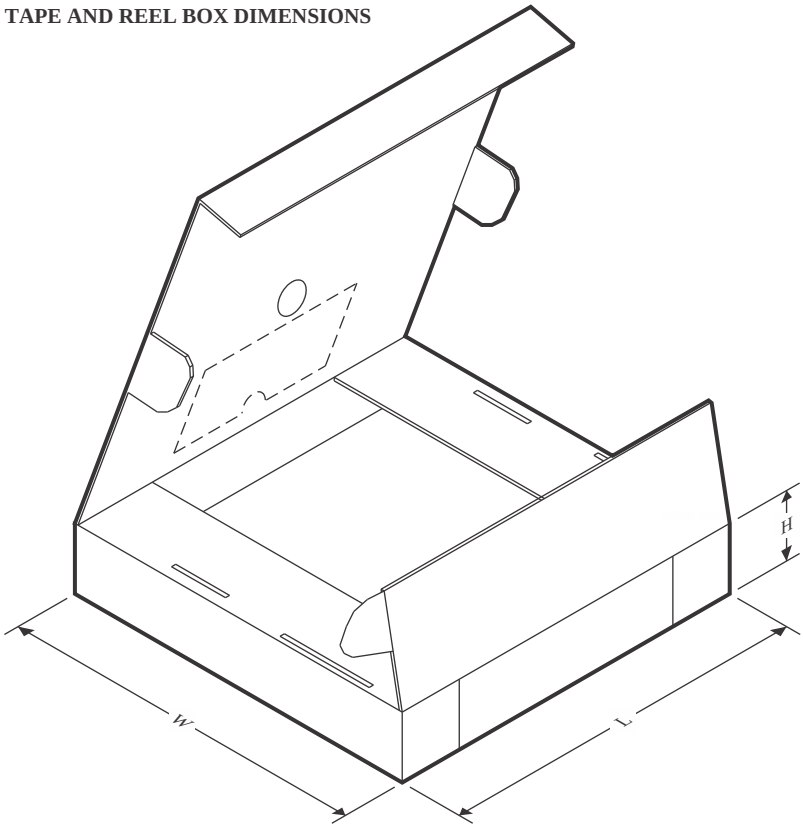

*All dimensions are nominal

Device	Package Type	Package Drawing	Pins	SPQ	Length (mm)	Width (mm)	Height (mm)
SN74LS390NSR	SOP	NS	16	2000	353.0	353.0	32.0
SN74LS393DR	SOIC	D	14	2500	353.0	353.0	32.0
SN74LS393NSR	SOP	NS	14	2000	353.0	353.0	32.0

TUBE

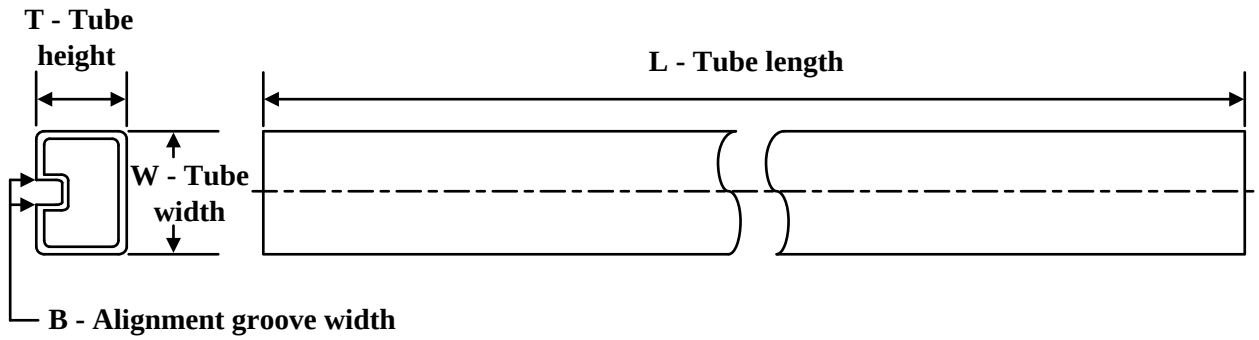

*All dimensions are nominal

Device	Package Name	Package Type	Pins	SPQ	L (mm)	W (mm)	T (µm)	B (mm)
7802601FA	W	CFP	16	25	506.98	26.16	6220	NA
JM38510/32701B2A	FK	LCCC	20	55	506.98	12.06	2030	NA
JM38510/32701B2A.A	FK	LCCC	20	55	506.98	12.06	2030	NA
JM38510/32702B2A	FK	LCCC	20	55	506.98	12.06	2030	NA
JM38510/32702B2A.A	FK	LCCC	20	55	506.98	12.06	2030	NA
JM38510/32702BDA	W	CFP	14	25	506.98	26.16	6220	NA
JM38510/32702BDA.A	W	CFP	14	25	506.98	26.16	6220	NA
JM38510/32702SDA	W	CFP	14	25	506.98	26.16	6220	NA
JM38510/32702SDA.A	W	CFP	14	25	506.98	26.16	6220	NA
M38510/32701B2A	FK	LCCC	20	55	506.98	12.06	2030	NA
M38510/32702B2A	FK	LCCC	20	55	506.98	12.06	2030	NA
M38510/32702BDA	W	CFP	14	25	506.98	26.16	6220	NA
M38510/32702SDA	W	CFP	14	25	506.98	26.16	6220	NA
SN74LS390D	D	SOIC	16	40	507	8	3940	4.32
SN74LS390D.A	D	SOIC	16	40	507	8	3940	4.32
SN74LS390N	N	PDIP	16	25	506	13.97	11230	4.32
SN74LS390N	N	PDIP	16	25	506	13.97	11230	4.32
SN74LS390N.A	N	PDIP	16	25	506	13.97	11230	4.32
SN74LS390N.A	N	PDIP	16	25	506	13.97	11230	4.32
SN74LS390NE4	N	PDIP	16	25	506	13.97	11230	4.32
SN74LS390NE4	N	PDIP	16	25	506	13.97	11230	4.32
SN74LS393N	N	PDIP	14	25	506	13.97	11230	4.32
SN74LS393N	N	PDIP	14	25	506	13.97	11230	4.32
SN74LS393N.A	N	PDIP	14	25	506	13.97	11230	4.32
SN74LS393N.A	N	PDIP	14	25	506	13.97	11230	4.32
SN74LS393NE4	N	PDIP	14	25	506	13.97	11230	4.32
SN74LS393NE4	N	PDIP	14	25	506	13.97	11230	4.32
SNJ54LS390FK	FK	LCCC	20	55	506.98	12.06	2030	NA
SNJ54LS390FK.A	FK	LCCC	20	55	506.98	12.06	2030	NA

Device	Package Name	Package Type	Pins	SPQ	L (mm)	W (mm)	T (µm)	B (mm)
SNJ54LS390W	W	CFP	16	25	506.98	26.16	6220	NA
SNJ54LS390W.A	W	CFP	16	25	506.98	26.16	6220	NA
SNJ54LS393FK	FK	LCCC	20	55	506.98	12.06	2030	NA
SNJ54LS393FK.A	FK	LCCC	20	55	506.98	12.06	2030	NA
SNJ54LS393W	W	CFP	14	25	506.98	26.16	6220	NA
SNJ54LS393W.A	W	CFP	14	25	506.98	26.16	6220	NA

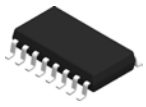

PACKAGE OUTLINE

NS0016A

SOP - 2.00 mm max height

SOP

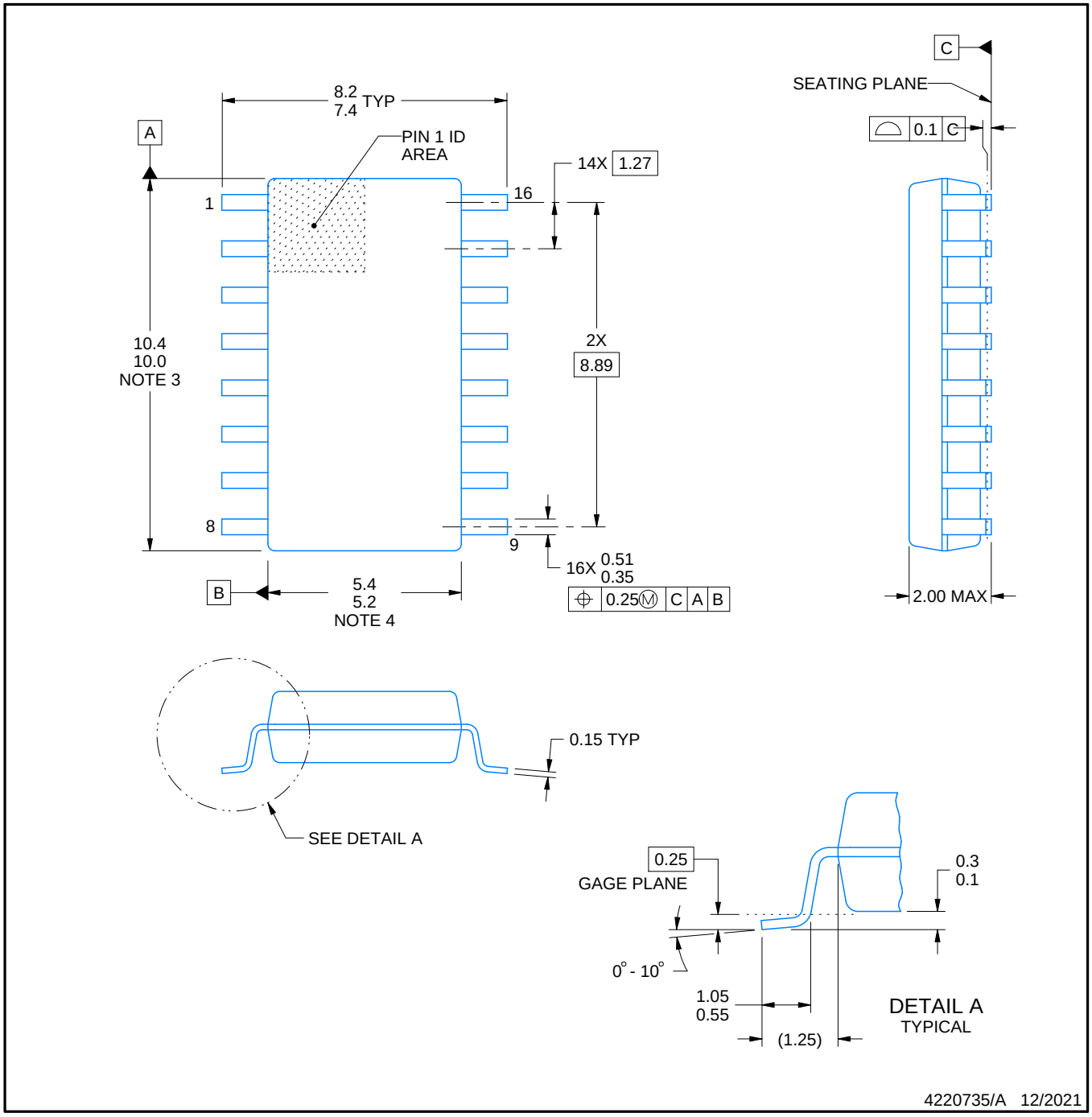

NOTES:

1. All linear dimensions are in millimeters. Dimensions in parenthesis are for reference only. Dimensioning and tolerancing per ASME Y14.5M.
2. This drawing is subject to change without notice.
3. This dimension does not include mold flash, protrusions, or gate burrs. Mold flash, protrusions, or gate burrs shall not exceed 0.15 mm, per side.
4. This dimension does not include interlead flash. Interlead flash shall not exceed 0.25 mm, per side.

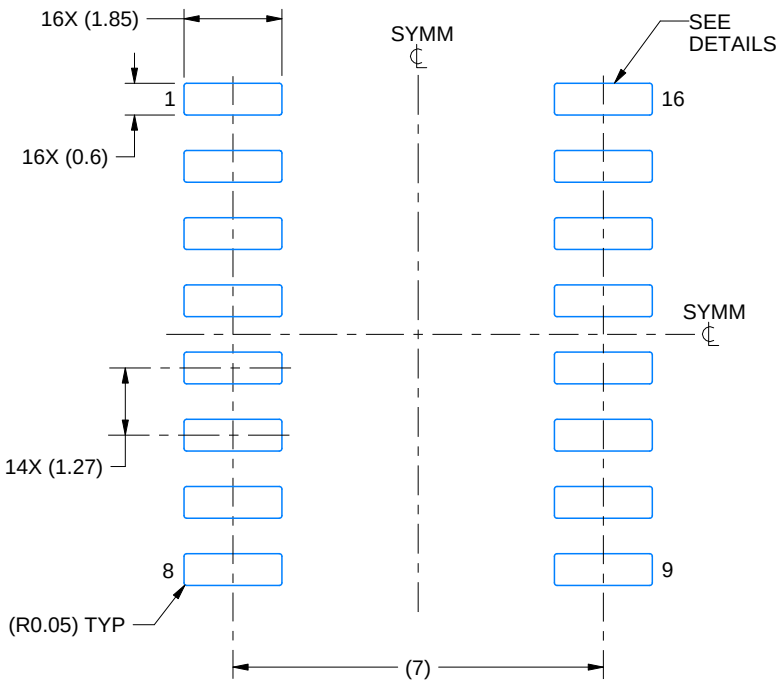

LAND PATTERN EXAMPLE
SCALE:7X

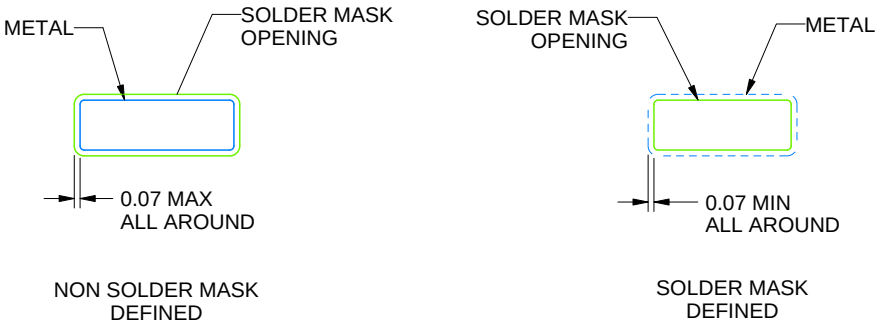

NON SOLDER MASK
DEFINED

SOLDER MASK
DEFINED

SOLDER MASK DETAILS

4220735/A 12/2021

NOTES: (continued)

5. Publication IPC-7351 may have alternate designs.
6. Solder mask tolerances between and around signal pads can vary based on board fabrication site.

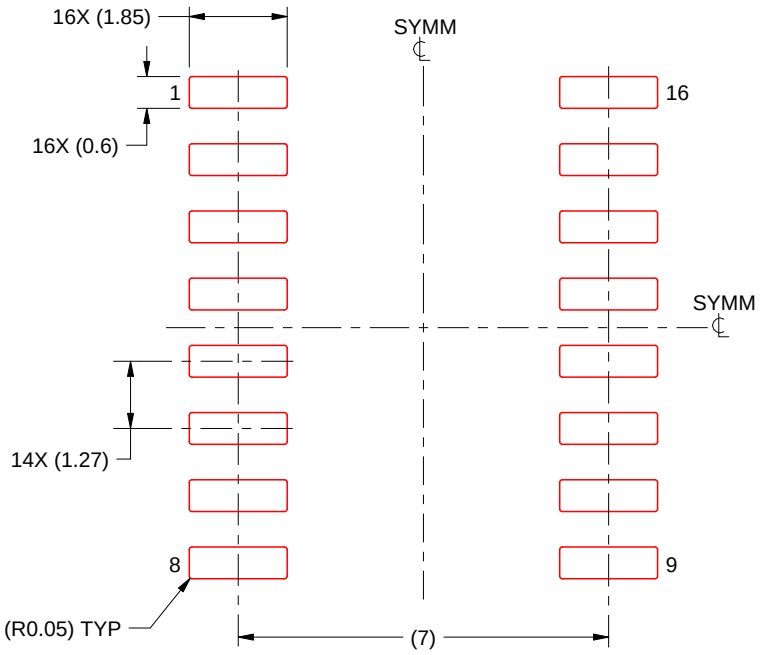

SOLDER PASTE EXAMPLE
BASED ON 0.125 mm THICK STENCIL
SCALE:7X

4220735/A 12/2021

NOTES: (continued)

7. Laser cutting apertures with trapezoidal walls and rounded corners may offer better paste release. IPC-7525 may have alternate design recommendations.
8. Board assembly site may have different recommendations for stencil design.

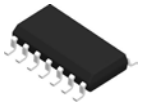

PACKAGE OUTLINE

D0014A

SOIC - 1.75 mm max height

SMALL OUTLINE INTEGRATED CIRCUIT

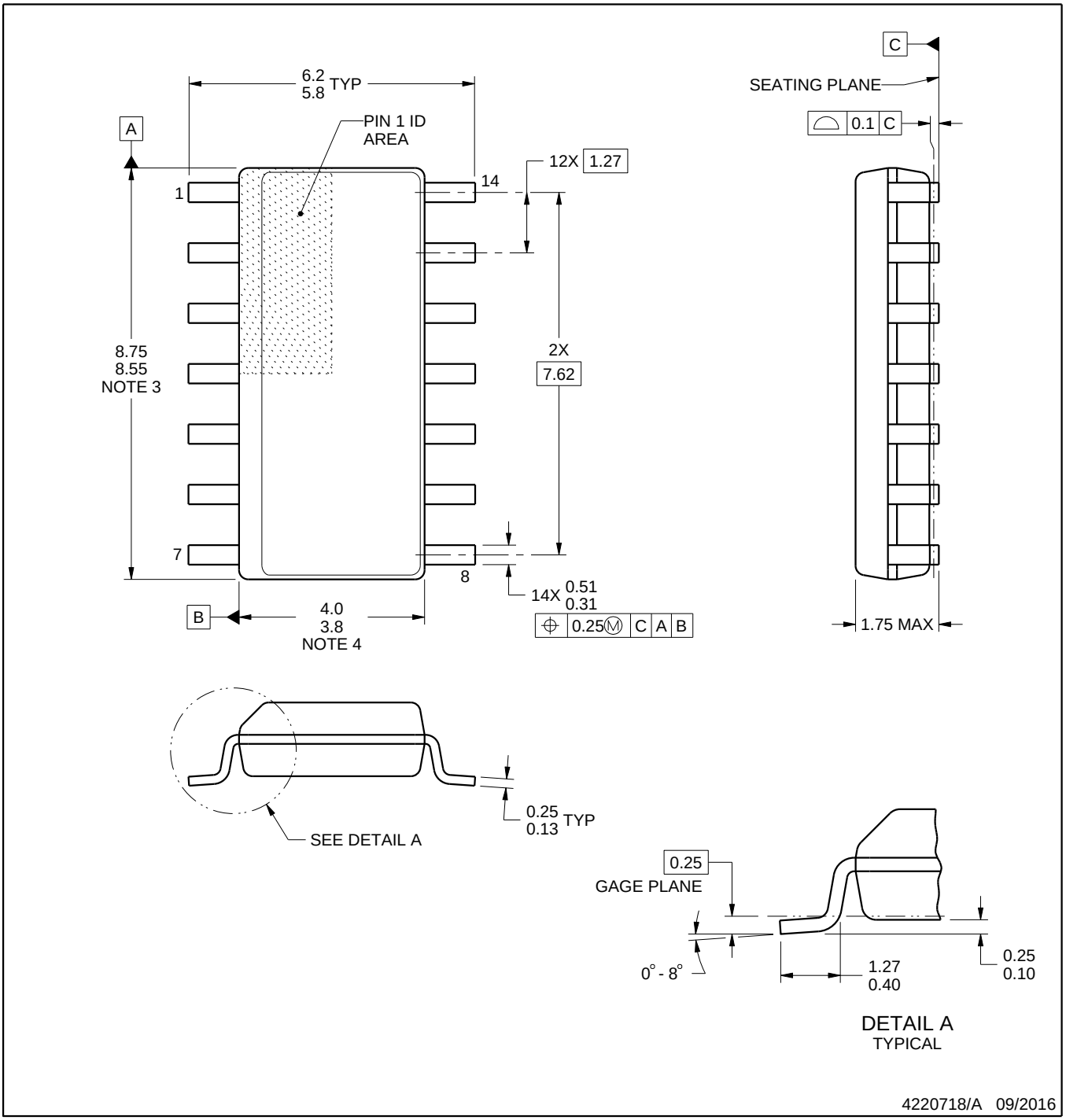

NOTES:

1. All linear dimensions are in millimeters. Dimensions in parenthesis are for reference only. Dimensioning and tolerancing per ASME Y14.5M.
2. This drawing is subject to change without notice.
3. This dimension does not include mold flash, protrusions, or gate burrs. Mold flash, protrusions, or gate burrs shall not exceed 0.15 mm, per side.
4. This dimension does not include interlead flash. Interlead flash shall not exceed 0.43 mm, per side.
5. Reference JEDEC registration MS-012, variation AB.

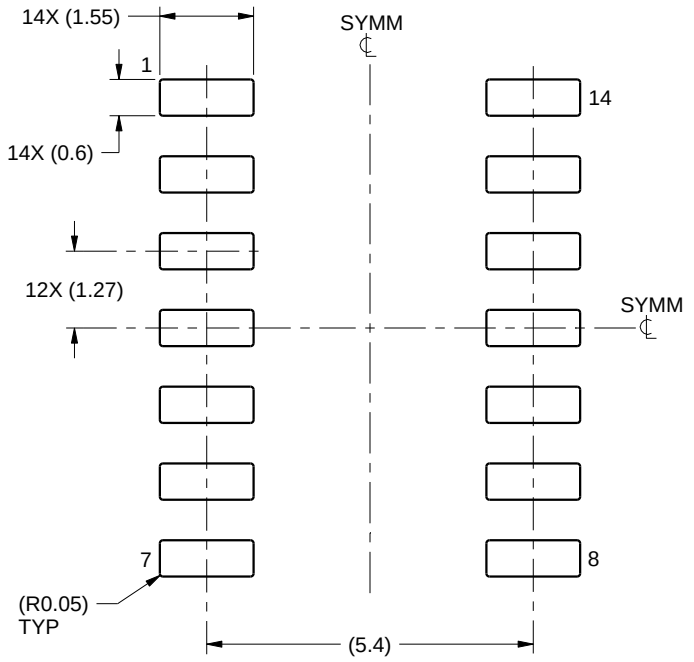

LAND PATTERN EXAMPLE
SCALE:8X

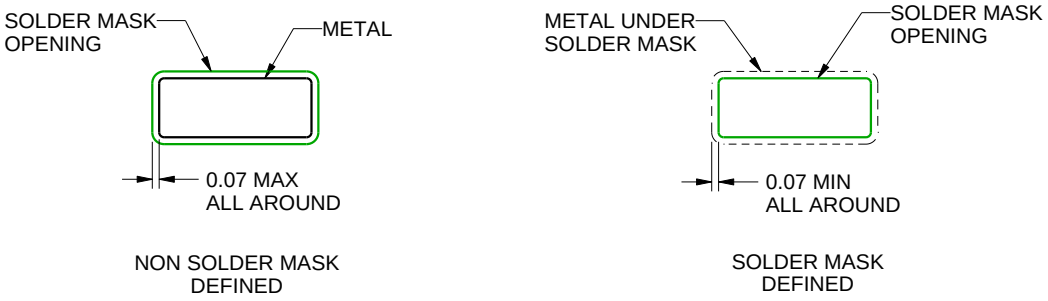

SOLDER MASK DETAILS

4220718/A 09/2016

NOTES: (continued)

6. Publication IPC-7351 may have alternate designs.
7. Solder mask tolerances between and around signal pads can vary based on board fabrication site.

EXAMPLE STENCIL DESIGN

D0014A

SOIC - 1.75 mm max height

SMALL OUTLINE INTEGRATED CIRCUIT

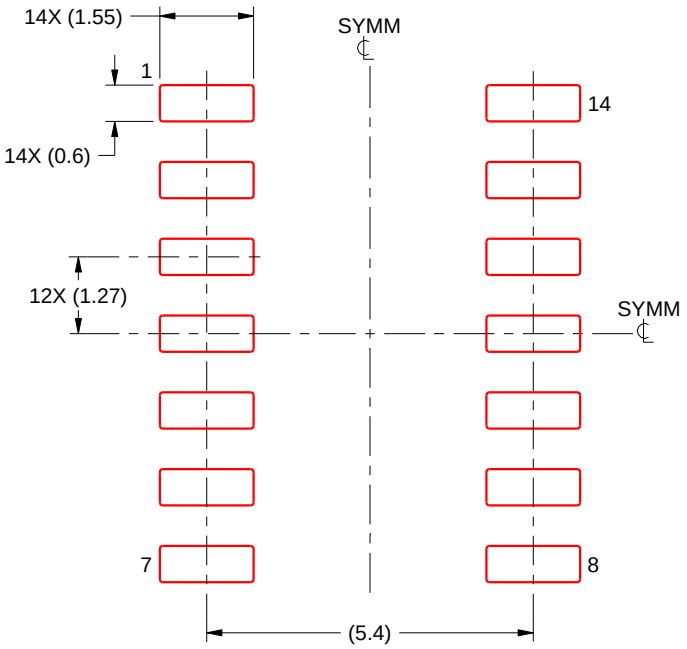

SOLDER PASTE EXAMPLE
BASED ON 0.125 mm THICK STENCIL
SCALE:8X

4220718/A 09/2016

NOTES: (continued)

8. Laser cutting apertures with trapezoidal walls and rounded corners may offer better paste release. IPC-7525 may have alternate design recommendations.
9. Board assembly site may have different recommendations for stencil design.

D (R–PDSO–G16) PLASTIC SMALL OUTLINE

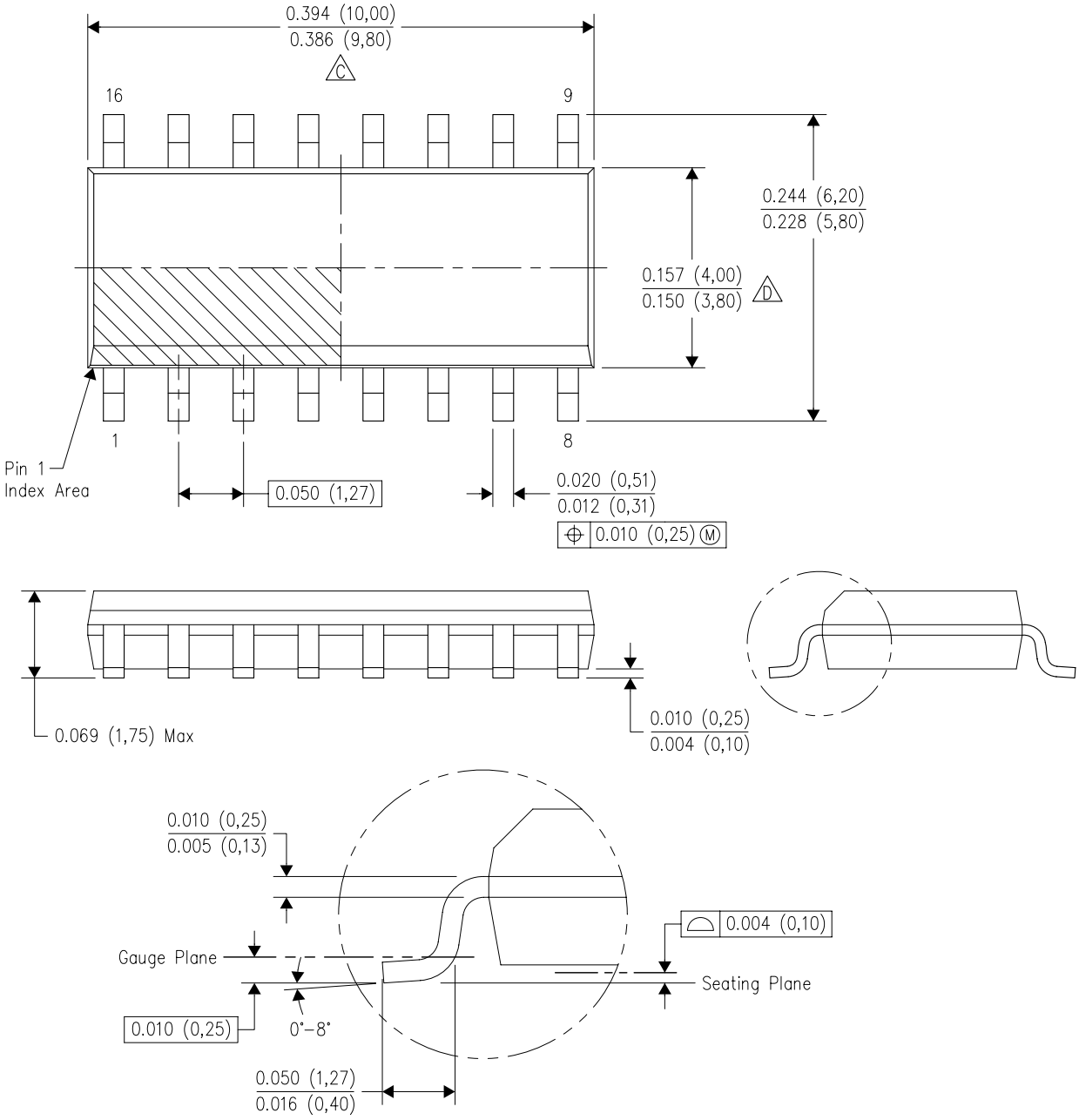

NOTES:
A. All linear dimensions are in inches (millimeters).
B. This drawing is subject to change without notice.
C. Body length does not include mold flash, protrusions, or gate burrs. Mold flash, protrusions, or gate burrs shall not exceed 0.006 (0,15) each side.
D. Body width does not include interlead flash. Interlead flash shall not exceed 0.017 (0,43) each side.
E. Reference JEDEC MS–012 variation AC.

MECHANICAL DATA

NS (R-PDSO-G)** **PLASTIC SMALL-OUTLINE PACKAGE**

14-PINS SHOWN

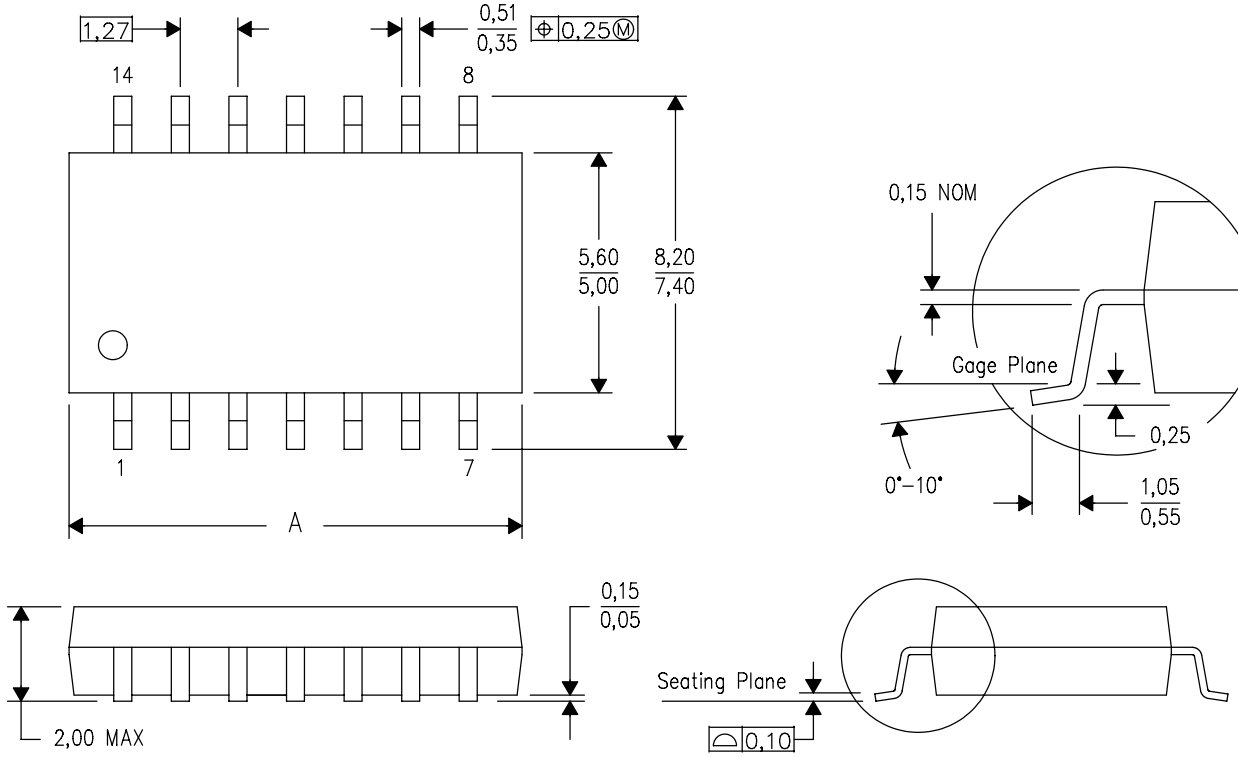

DIM \ PINS **	14	16	20	24
A MAX	10,50	10,50	12,90	15,30
A MIN	9,90	9,90	12,30	14,70

4040062/C 03/03

NOTES:
A. All linear dimensions are in millimeters.
B. This drawing is subject to change without notice.
C. Body dimensions do not include mold flash or protrusion, not to exceed 0,15.

W (R–GDFP–F16) CERAMIC DUAL FLATPACK

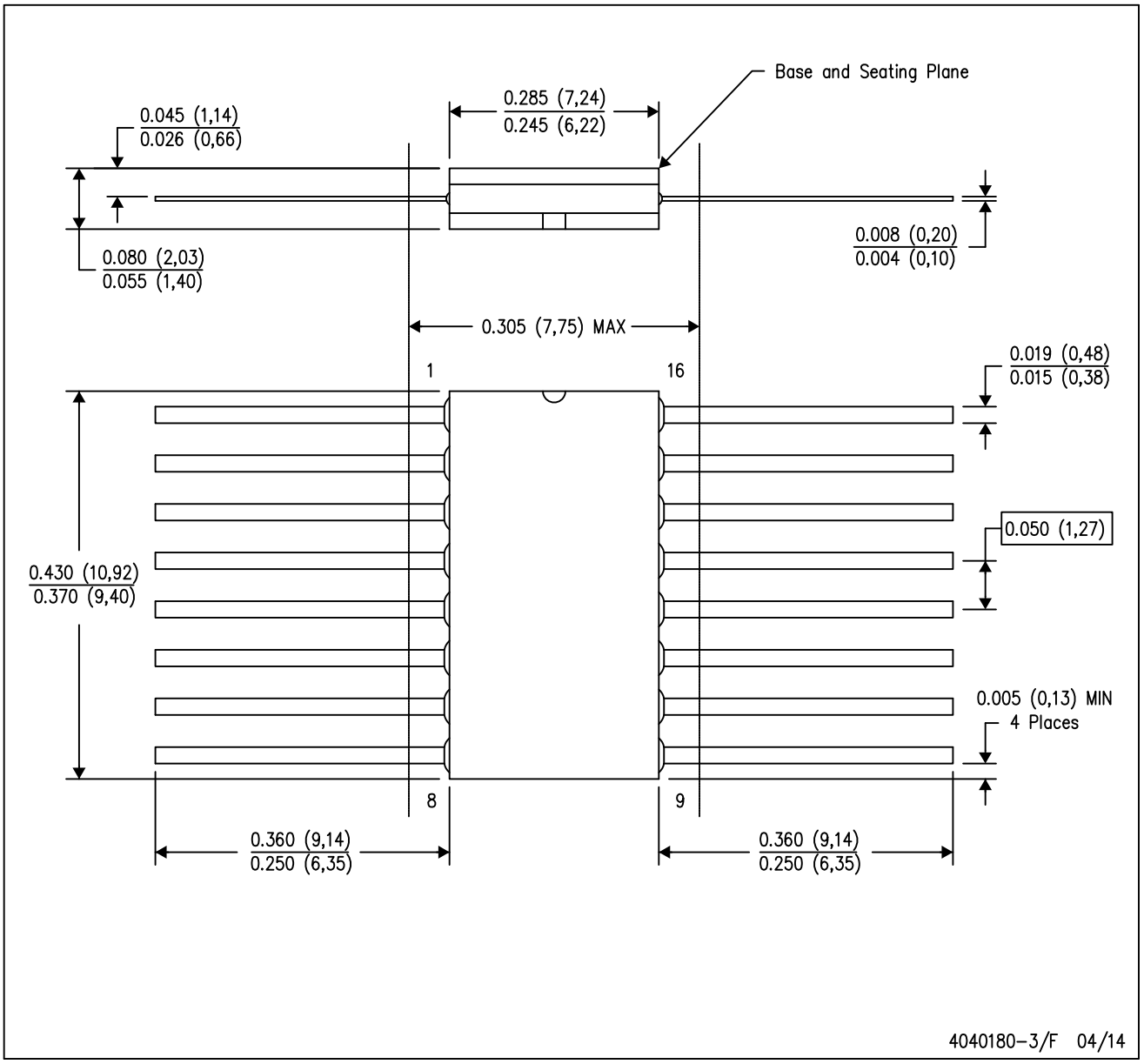

NOTES:
A. All linear dimensions are in inches (millimeters).
B. This drawing is subject to change without notice.
C. This package can be hermetically sealed with a ceramic lid using glass frit.
D. Index point is provided on cap for terminal identification only.
E. Falls within MIL STD 1835 GDFP2–F16

GENERIC PACKAGE VIEW

FK 20

LCCC - 2.03 mm max height

8.89 x 8.89, 1.27 mm pitch

LEADLESS CERAMIC CHIP CARRIER

This image is a representation of the package family, actual package may vary.
Refer to the product data sheet for package details.

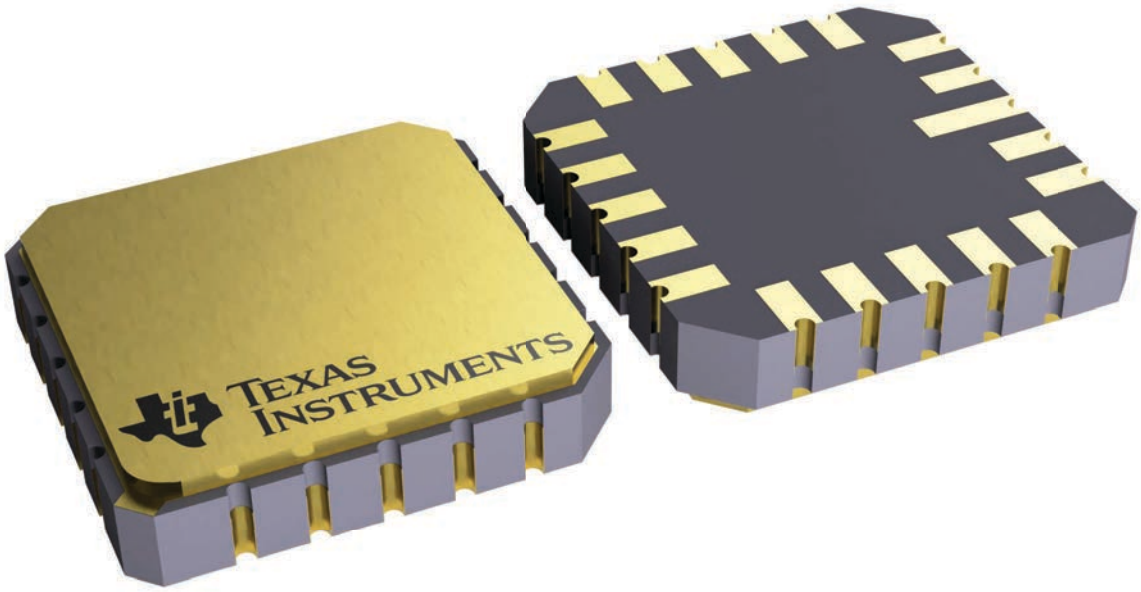

4229370VA\

J (R–GDIP–T**)

14 LEADS SHOWN

CERAMIC DUAL IN–LINE PACKAGE

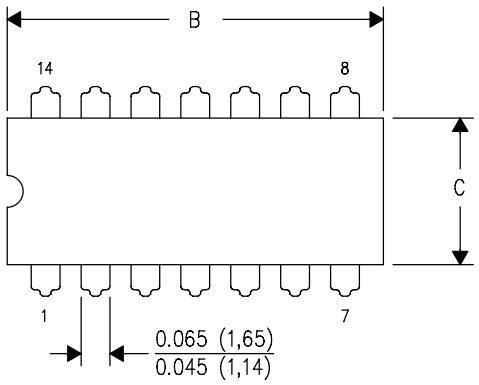

DIM \ PINS **	14	16	18	20
A	0.300 (7,62) BSC	0.300 (7,62) BSC	0.300 (7,62) BSC	0.300 (7,62) BSC
B MAX	0.785 (19,94)	.840 (21,34)	0.960 (24,38)	1.060 (26,92)
B MIN	—	—	—	—
C MAX	0.300 (7,62)	0.300 (7,62)	0.310 (7,87)	0.300 (7,62)
C MIN	0.245 (6,22)	0.245 (6,22)	0.220 (5,59)	0.245 (6,22)

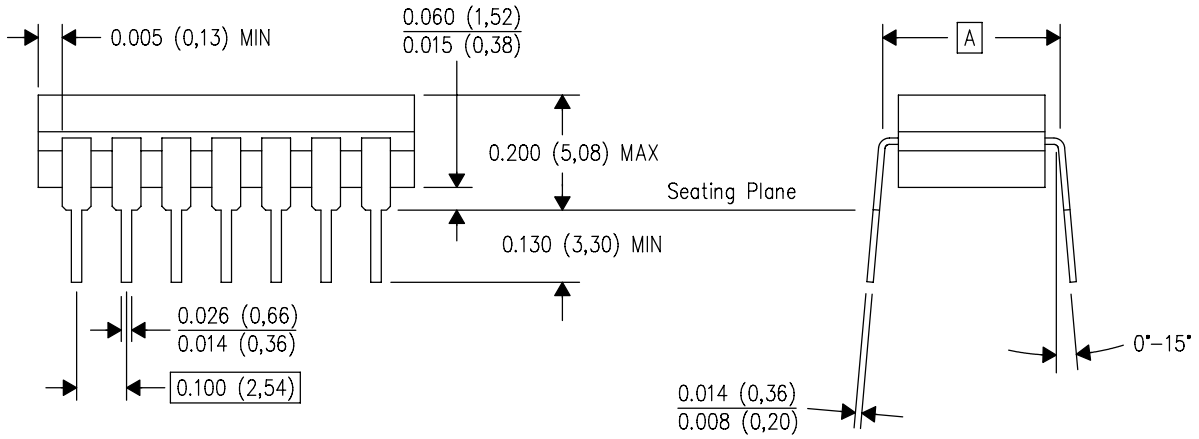

4040083/F 03/03

NOTES:
A. All linear dimensions are in inches (millimeters).
B. This drawing is subject to change without notice.
C. This package is hermetically sealed with a ceramic lid using glass frit.
D. Index point is provided on cap for terminal identification only on press ceramic glass frit seal only.
E. Falls within MIL STD 1835 GDIP1–T14, GDIP1–T16, GDIP1–T18 and GDIP1–T20.

GENERIC PACKAGE VIEW

J 14 CDIP - 5.08 mm max height

CERAMIC DUAL IN LINE PACKAGE

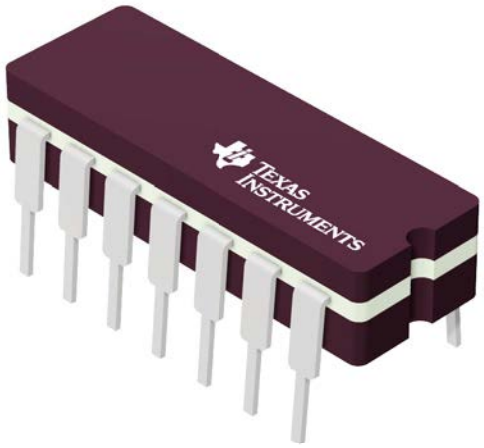

Images above are just a representation of the package family, actual package may vary.
Refer to the product data sheet for package details.

4040083-5/G



PACKAGE OUTLINE

J0014A

CDIP - 5.08 mm max height

CERAMIC DUAL IN LINE PACKAGE

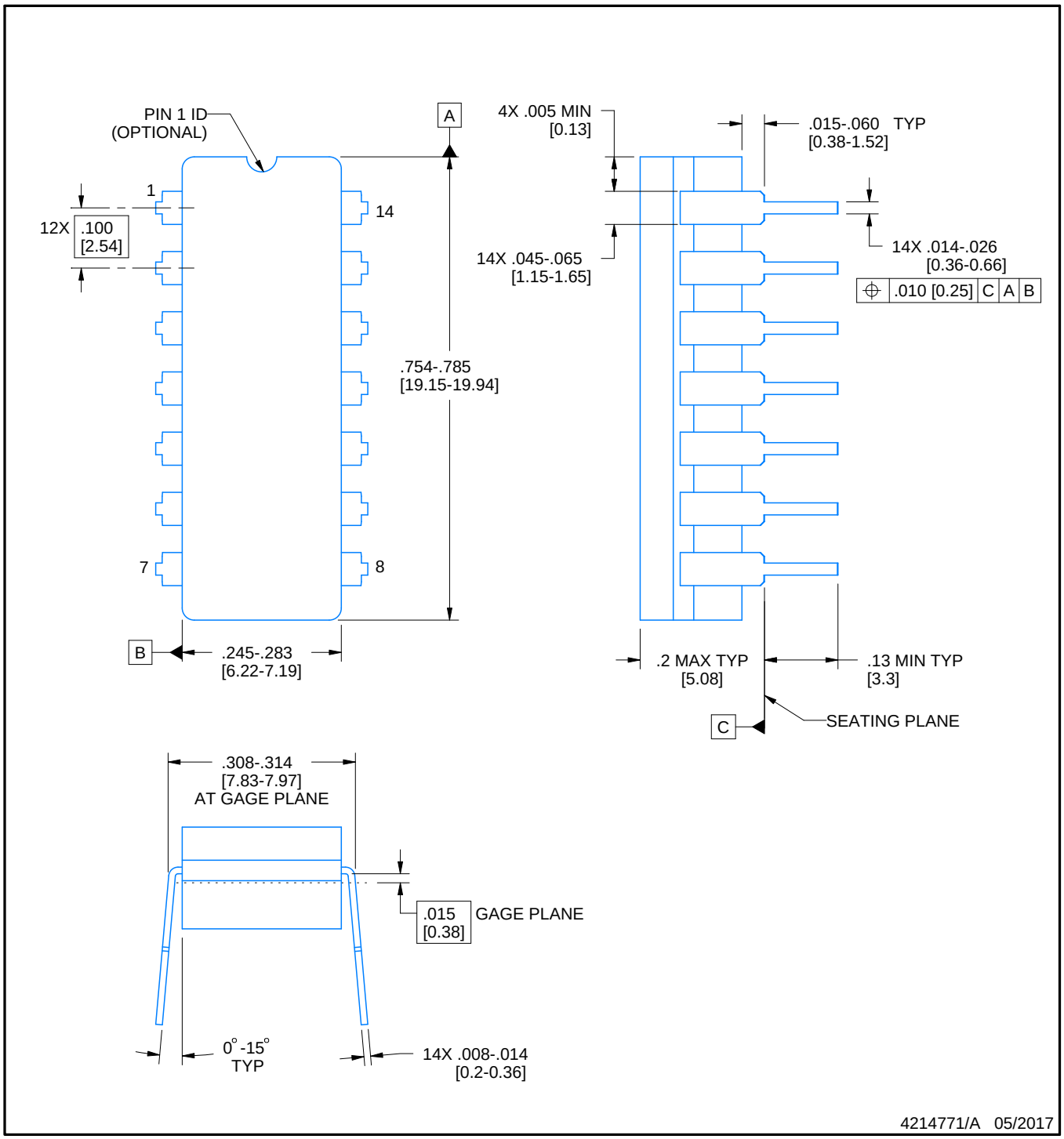

NOTES:

1. All controlling linear dimensions are in inches. Dimensions in brackets are in millimeters. Any dimension in brackets or parenthesis are for reference only. Dimensioning and tolerancing per ASME Y14.5M.
2. This drawing is subject to change without notice.
3. This package is hermitically sealed with a ceramic lid using glass frit.
4. Index point is provided on cap for terminal identification only and on press ceramic glass frit seal only.
5. Falls within MIL-STD-1835 and GDIP1-T14.

EXAMPLE BOARD LAYOUT

J0014A

CDIP - 5.08 mm max height

CERAMIC DUAL IN LINE PACKAGE

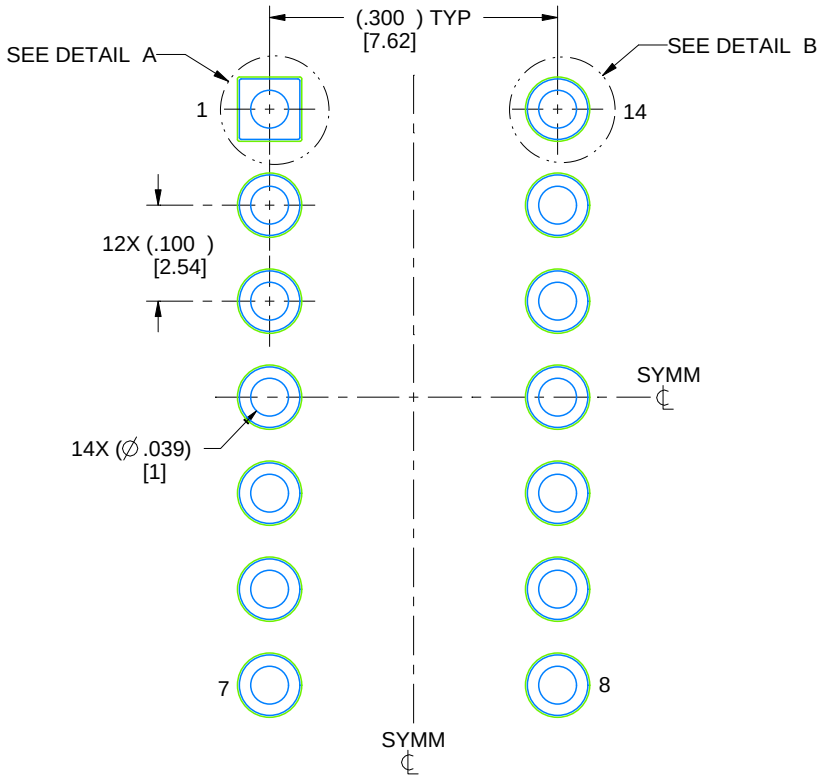

LAND PATTERN EXAMPLE
NON-SOLDER MASK DEFINED
SCALE: 5X

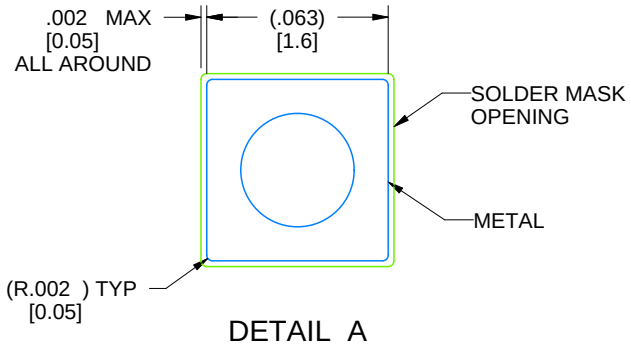

DETAIL A
SCALE: 15X

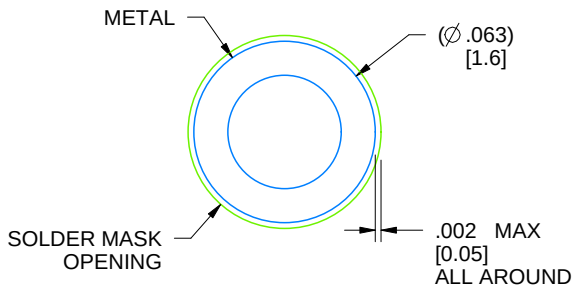

DETAIL B
13X, SCALE: 15X

4214771/A 05/2017

N (R–PDIP–T**)

PLASTIC DUAL–IN–LINE PACKAGE

16 PINS SHOWN

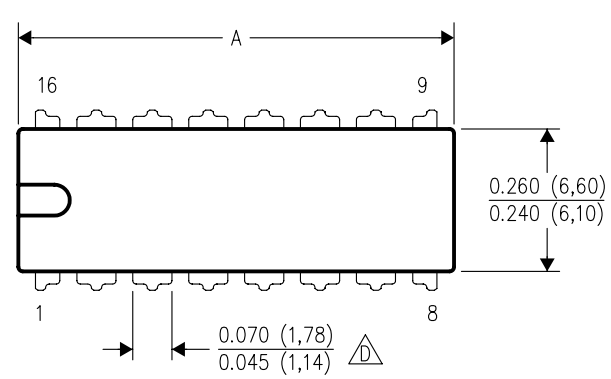

DIM \ PINS **	14	16	18	20
A MAX	0.775 (19,69)	0.775 (19,69)	0.920 (23,37)	1.060 (26,92)
A MIN	0.745 (18,92)	0.745 (18,92)	0.850 (21,59)	0.940 (23,88)
MS–001 VARIATION (C)	AA	BB	AC	AD

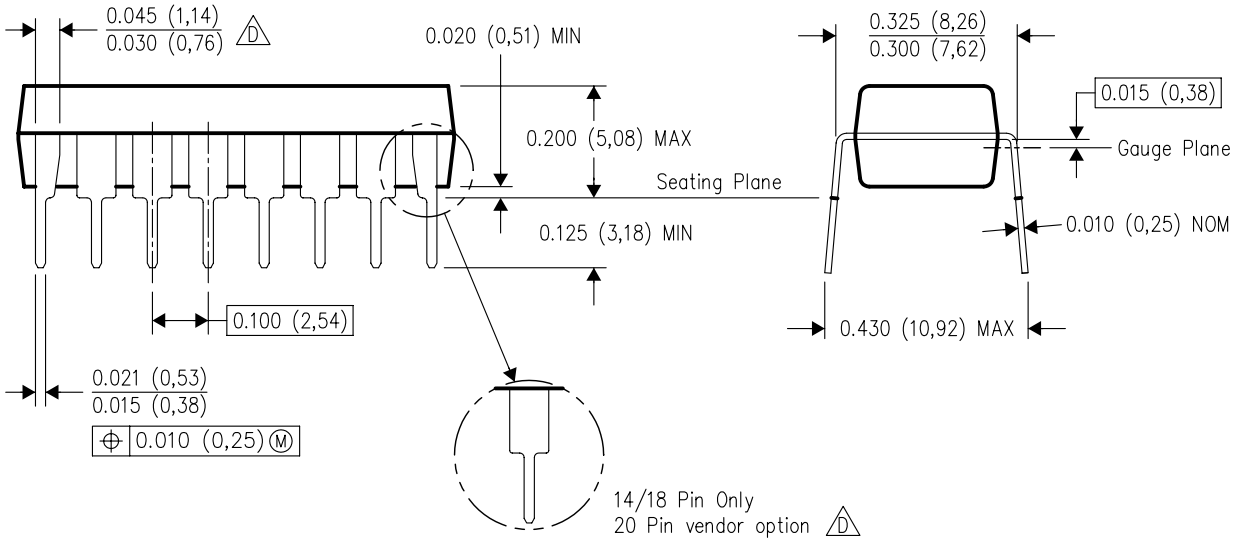

4040049/E 12/2002

NOTES:
A. All linear dimensions are in inches (millimeters).
B. This drawing is subject to change without notice.
C. Falls within JEDEC MS–001, except 18 and 20 pin minimum body length (Dim A).
D. The 20 pin end lead shoulder width is a vendor option, either half or full width.

W (R–GDFP–F14) CERAMIC DUAL FLATPACK

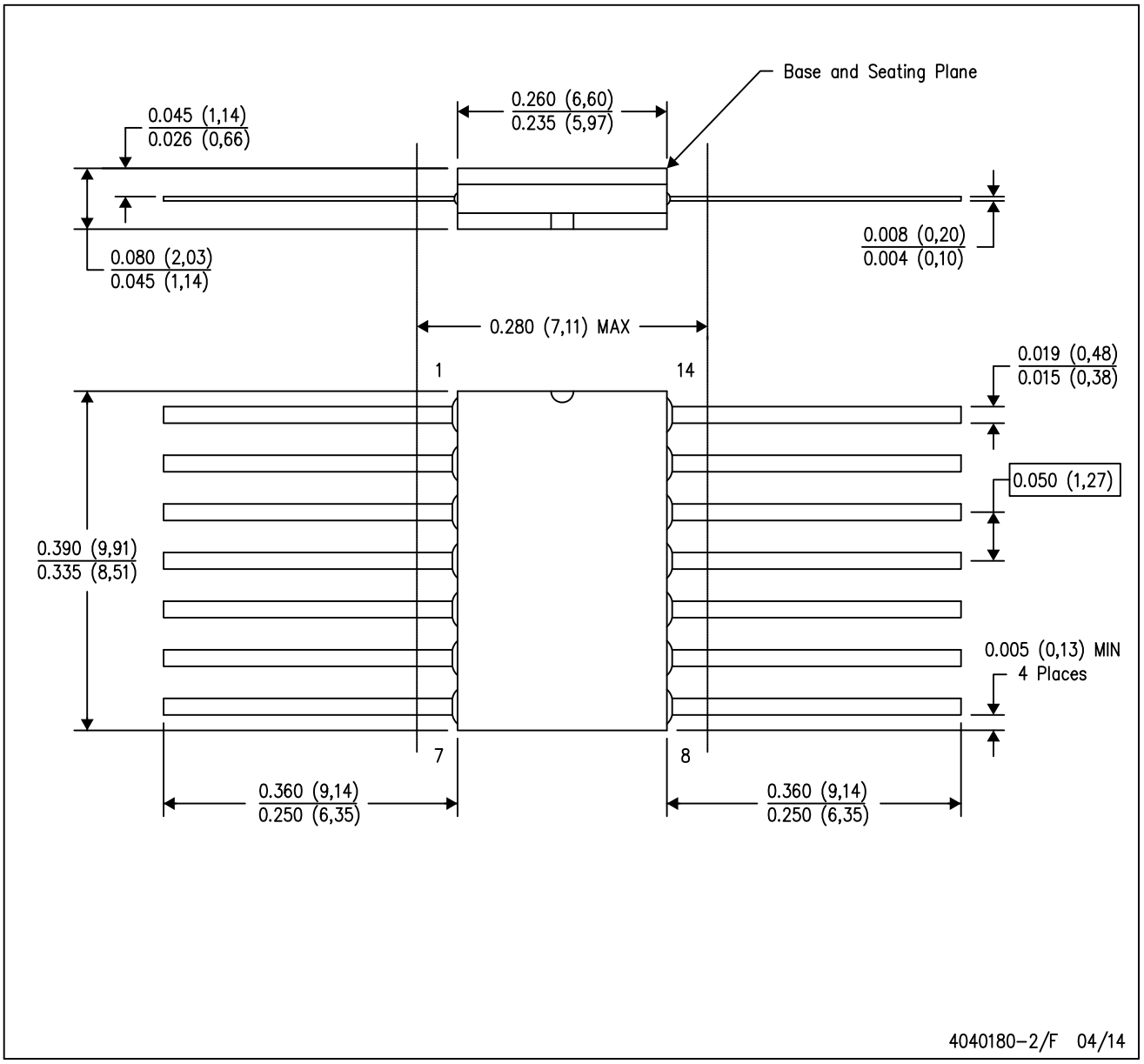

NOTES:
A. All linear dimensions are in inches (millimeters).
B. This drawing is subject to change without notice.
C. This package can be hermetically sealed with a ceramic lid using glass frit.
D. Index point is provided on cap for terminal identification only.
E. Falls within MIL STD 1835 GDFP1–F14

IMPORTANT NOTICE AND DISCLAIMER

TI PROVIDES TECHNICAL AND RELIABILITY DATA (INCLUDING DATASHEETS), DESIGN RESOURCES (INCLUDING REFERENCE DESIGNS), APPLICATION OR OTHER DESIGN ADVICE, WEB TOOLS, SAFETY INFORMATION, AND OTHER RESOURCES “AS IS” AND WITH ALL FAULTS, AND DISCLAIMS ALL WARRANTIES, EXPRESS AND IMPLIED, INCLUDING WITHOUT LIMITATION ANY IMPLIED WARRANTIES OF MERCHANTABILITY, FITNESS FOR A PARTICULAR PURPOSE OR NON-INFRINGEMENT OF THIRD PARTY INTELLECTUAL PROPERTY RIGHTS.

These resources are intended for skilled developers designing with TI products. You are solely responsible for (1) selecting the appropriate TI products for your application, (2) designing, validating and testing your application, and (3) ensuring your application meets applicable standards, and any other safety, security, regulatory or other requirements.

These resources are subject to change without notice. TI grants you permission to use these resources only for development of an application that uses the TI products described in the resource. Other reproduction and display of these resources is prohibited. No license is granted to any other TI intellectual property right or to any third party intellectual property right. TI disclaims responsibility for, and you fully indemnify TI and its representatives against any claims, damages, costs, losses, and liabilities arising out of your use of these resources.

TI’s products are provided subject to TI’s Terms of Sale, TI’s General Quality Guidelines, or other applicable terms available either on ti.com or provided in conjunction with such TI products. TI’s provision of these resources does not expand or otherwise alter TI’s applicable warranties or warranty disclaimers for TI products. Unless TI explicitly designates a product as custom or customer-specified, TI products are standard, catalog, general purpose devices.

TI objects to and rejects any additional or different terms you may propose.

Copyright © 2026, Texas Instruments Incorporated

Last updated 10/2025