SN65HVS883 24 V, Eight-Channel Digital-Input Serializer

1 Features

- Eight Sensor Inputs
  - High Input Voltage up to 34 V
  - Selectable Debounce Filters From 0 ms to 3 ms
  - Adjustable Current Limits From 0.2 mA to 5.2 mA
  - Field Inputs and Supply Lines Protected to 15-kV HBM
- Output Drivers for External Status LEDs
- Cascadable for More Inputs in Multiples of Eight
- SPI-Compatible Interface
- Regulated 5-V Output for External Digital Isolator
- Low-Supply Voltage Indicator

2 Applications

- Sensor Inputs for Industrial Automation and Process Control
  - IEC61131-2 Type 1, 2, or 3 Switches
  - EN60947-5-2 Proximity Switches
- High Channel Count Digital Input Modules for PC and PLC Systems
- Decentralized I/O Modules

3 Description

The SN65HVS883 is a 24-V, eight-channel, digital-input serializer for high-channel density digital input modules of PC and PLC-based systems in industrial automation. In combination with galvanic isolators, the device completes the interface between the 24-V sensor outputs of the field-side and the low-voltage controller inputs at the control-side. Input signals provided by EN60947-5-2 compliant 2-wire and 3-wire proximity switches are current-limited and then validated by internal debounce filters. The input switching characteristic is in accordance with IEC61131-2 for Type 1, 2, and 3 sensor switches.

Upon the application of load and clock signals, input data is latched in parallel into the shift register and afterwards clocked out serially via a subsequent isolator into a serial PLC input.

Cascading of multiple SN65HVS883 is possible by connecting the serial output of the leading device with the serial input of the following device, enabling the design of high-channel count input modules. Input status is indicated via 3-mA constant current LED outputs. An external precision resistor is required to set the internal reference current. The integrated voltage regulator provides a 5-V output to supply low-power isolators. An internal supply voltage monitor provides a chip-okay (CHOK) indication.

The SN65HVS883 comes in a 28-pin PWP PowerPAD™ package allowing for efficient heat dissipation. The device is specified for operation at temperatures from –40°C to 85°C.

Device Information(1)

PART NUMBER	PACKAGE	BODY SIZE (NOM)
SN65HVS883	HTSSOP (28)	9.70 mm x 4.40 mm

(1) For all available packages, see the orderable addendum at the end of the data sheet.

Simplified I/O Structure

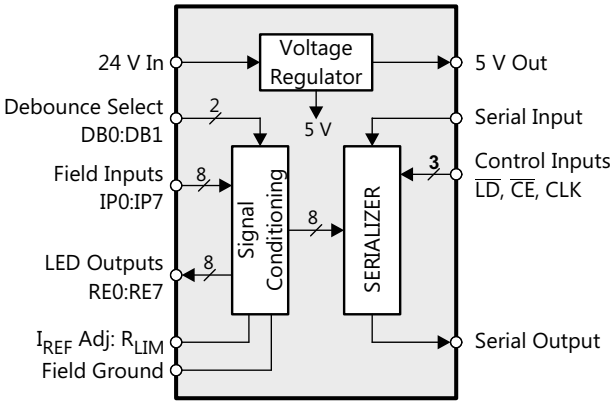

Copyright © 2016, Texas Instruments Incorporated

An IMPORTANT NOTICE at the end of this data sheet addresses availability, warranty, changes, use in safety-critical applications, intellectual property matters and other important disclaimers. PRODUCTION DATA.

Table of Contents

1 Features ... 1
2 Applications ... 1
3 Description ... 1
4 Revision History ... 2
5 Pin Configuration and Functions ... 3
6 Specifications ... 4
6.1 Absolute Maximum Ratings ... 4
6.2 ESD Ratings ... 4
6.3 Recommended Operating Conditions ... 4
6.4 Thermal Information ... 4
6.5 Electrical Characteristics ... 5
6.6 Timing Requirements ... 6
6.7 Switching Characteristics ... 6
6.8 Typical Input Characteristics ... 7
6.9 Typical Voltage Regulator Performance Characteristics ... 8
7 Parameter Measurement Information ... 9
7.1 Waveforms ... 9
7.2 Signal Conventions ... 9
8 Detailed Description ... 10
8.1 Overview ... 10
8.2 Functional Block Diagram ... 10
8.3 Feature Description ... 11
8.4 Device Functional Modes ... 14
9 Application and Implementation ... 15
9.1 Application Information ... 15
9.2 Typical Application ... 18
10 Power Supply Recommendations ... 21
11 Layout ... 21
11.1 Layout Guidelines ... 21
11.2 Layout Example ... 21
12 Device and Documentation Support ... 22
12.1 Third-Party Products Disclaimer ... 22
12.2 Receiving Notification of Documentation Updates ... 22
12.3 Community Resources ... 22
12.4 Trademarks ... 22
12.5 Electrostatic Discharge Caution ... 22
12.6 Glossary ... 22
13 Mechanical, Packaging, and Orderable Information ... 22

4 Revision History

NOTE: Page numbers for previous revisions may differ from page numbers in the current version.

DATE	REVISION	NOTES
September 2016	*	Initial release.

Copyright © 2016, Texas Instruments Incorporated

5 Pin Configuration and Functions

PWP Package
28 Pin (HTSSOP) With Exposed Thermal Pad
Top View

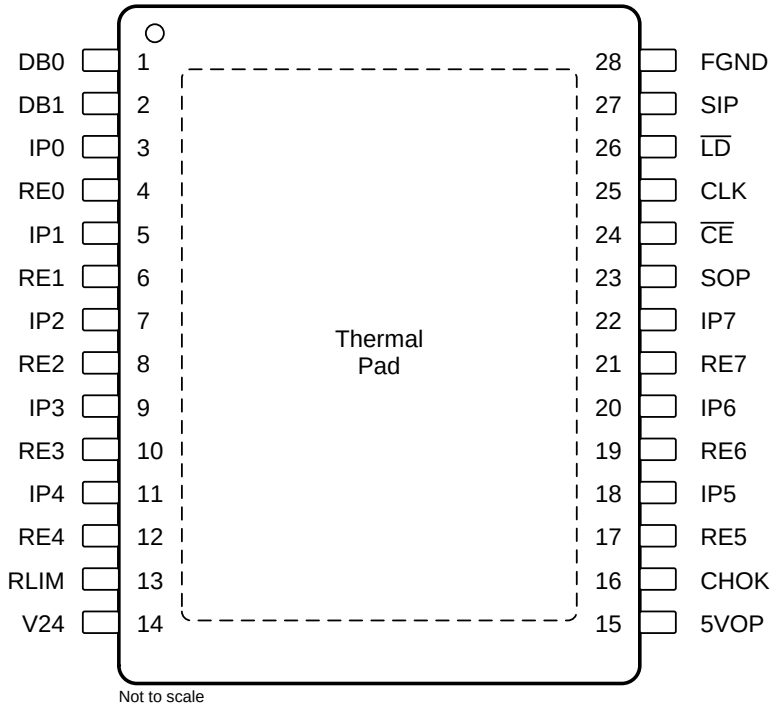

Pin Functions

PIN		DESCRIPTION
PIN NO.	NAME	
1, 2	DB0, DB1	Debounce select inputs
3, 5, 7, 9, 11, 18, 20, 22	IPx	Input channel x
4, 6, 8, 10, 12, 17, 19, 21	REx	Return path x (LED drive)
13	RLIM	Current limiting resistor
14	V24	24 VDC field supply
15	5VOP	5 V output to supply low-power isolators
16	CHOK	Chip okay indicator output
23	SOP	Serial data output
24	$\overline{CE}$	Clock enable input
25	CLK	Serial clock input
26	$\overline{LD}$	Load pulse input
27	SIP	Serial data input
28	FGND	Field ground

6 Specifications

6.1 Absolute Maximum Ratings

over operating free-air temperature range (unless otherwise noted)

			MIN	MAX	UNIT
V24	Field power input	V24	–0.3	36	V
V_{IPx}	Field digital inputs	IPx	–0.3	36	V
V_{ID}	Voltage at any logic input	DB0, DB1, CLK, SIP, $\overline{CE}$, $\overline{LD}$	–0.5	6	V
I_O	Output current	CHOK, SOP		±8	mA
P_{TOT}	Continuous total power dissipation		See *Thermal Information* table		
T_J	Junction temperature			170	°C

6.2 ESD Ratings

				VALUE	UNIT
$V_{(ESD)}$	Electrostatic discharge	Human-body model (HBM), per ANSI/ESDA/JEDEC JS-001 (1)	All pins	±4000	V
			IPx,V24	±15000	
		Charged-device model (CDM), per JEDEC specification JESD22-C101 (2)	All pins	±1000	
		Machine Mode (3)	All pins	±100	

(1) JEDEC document JEP155 states that 500-V HBM allows safe manufacturing with a standard ESD control process.
(2) JEDEC document JEP157 states that 250-V CDM allows safe manufacturing with a standard ESD control process.
(3) JEDEC Standard 22, Method A115-A.

6.3 Recommended Operating Conditions

		MIN	TYP	MAX	UNIT
V_{24}	Field supply voltage	10	24	34	V
V_{IPL}	Field input low-state input voltage (1)	0		4	V
V_{IPH}	Field input high-state input voltage (1)	10		34	V
V_{IL}	Logic low-state input voltage	0		0.8	V
V_{IH}	Logic high-state input voltage	2		5.5	V
R_{LIM}	Current limiter resistor	17	25	500	kΩ
f_{IP}	Input data rate (2)	0		1	Mbps
T_J				150	°C
T_A		–40		85	°C

(1) Field input voltages correspond to an input resistor of R_{IN} = 1.2 kΩ
(2) Maximum data rate corresponds to 0 ms debounce time, (DB0 = open, DB1 = FGND), and R_{IN} = 0 Ω

6.4 Thermal Information

THERMAL METRIC (1)			SN65HVS883 PWP (HTSSOP) 28 PINS	UNIT
$R_{\theta JA}$	Junction-to-ambient thermal resistance		35	°C/W
$R_{\theta JC(top)}$	Junction-to-case (top) thermal resistance		4.27	°C/W
$R_{\theta JB}$	Junction-to-board thermal resistance		15	°C/W
PD	Device power dissipation	I_{LOAD} = 50 mA, R_{IN} = 0, IPO–IP7 = V24 = 30 V, RE7 = FGND, f_{CLK} = 100 MHz, I_{IP-LIM} and I_{CC} = worst case with R_{LIM} = 25 kΩ	2591	mW

(1) For more information about traditional and new thermal metrics, see the *Semiconductor and IC Package Thermal Metrics* application report.

Copyright © 2016, Texas Instruments Incorporated

6.5 Electrical Characteristics

all voltages measured against FGND unless otherwise stated, see Figure 12

SYMBOL	PARAMETER	PIN	TEST CONDITIONS	MIN	TYP	MAX	UNIT
$V_{TH-(IP)}$	Low-level device input threshold voltage	IP0–IP7	18 V< V24 < 34 V, R_{IN} = 0 Ω , R_{LIM} = 25 kΩ	4	4.3		V
$V_{TH+(IP)}$	High-level device input threshold voltage				5.2	5.5	V
$V_{HYS(IP)}$	Device input hysteresis				0.9		V
$V_{TH-(IN)}$	Low-level field input threshold voltage	measured at field side of R_{IN}	18 V < V24 < 34 V, R_{IN} = 1.2 kΩ ± 5%, R_{LIM} = 25 kΩ	6	8.4		V
$V_{TH+(IN)}$	High-level field input threshold voltage				9.4	10	V
$V_{HYS(IN)}$	Field input hysteresis				1		V
$V_{TH-(V24)}$	Low-level V24-monitor threshold voltage	V24		15	16.05		V
$V_{TH+(V24)}$	High-level V24-monitor threshold voltage				16.8	18	V
$V_{HYS(V24)}$	V24-monitor hysteresis				0.75		V
R_{IP}	Input resistance	IP0–IP7	3 V < V_{IPx} < 6 V, R_{IN} = 1.2 kΩ ± 5%, R_{LIM} = 25 kΩ	1.4	1.83	2.3	kΩ
I_{IP-LIM}	Input current limit		10 V < V_{IPx} < 34 V, R_{LIM} = 25 kΩ	3.15	3.6	4	mA
V_{OL}	Logic low-level output voltage	SOP, CHOK	I_{OL} = 20 µA			0.4	V
V_{OH}	Logic high-level output voltage		I_{OH} = –20 µA	4			V
I_{IL}	Logic input leakage current	$\overline{DB0}$, $\overline{DB1}$, SIP, $\overline{LD}$, $\overline{CE}$, CLK		–50		50	µA
I_{RE-on}	RE on-state current	RE0–RE7	R_{LIM} = 25 kΩ, RE_X = FGND	2.8	3.15	3.5	mA
$I_{CC(V24)}$	Supply current	V24	IP0 to IP7 = V24, 5VOP = open, RE_X = FGND, All logic inputs open			8.7	mA
$V_{O(5V)}$	Linear regulator output voltage	5VOP	18 V < V24 < 34 V, no load	4.5	5	5.5	V
			18 V < V24 < 34 V, I_L = 50 mA	4.5	5	5.5	
$I_{LIM(5V)}$	Linear regulator output current limit				115		mA
$\Delta V_5/\Delta V_{24}$	Line regulation	5VOP, V24	18 V < V24 < 34 V, I_L = 5 mA			2	mV/V
t_{DB}	Debounce times of input channels	IP0–IP7	DB0 = open, DB1 = FGND		0		ms
			DB0 = FGND, DB1 = open		1		
			DB0 = DB1 = open		3		
t_{DB-HL}	Voltage monitor debounce time after V24 < 15 V (CHOK turns low)	V24, CHOK			1		ms
t_{DB-LH}	Voltage monitor debounce time after V24 > 18 V (CHOK turns high)				6		ms
T_{SHDN}	Shutdown temperature				170		°C

6.6 Timing Requirements

over operating free-air temperature range (unless otherwise noted)

SYMBOL	PARAMETER		MIN	TYP	MAX	UNIT
t_{W1}	CLK pulse width	See Figure 9	4			ns
t_{W2}	$\overline{LD}$ pulse width	See Figure 7	6			ns
t_{SU1}	SIP to CLK setup time	See Figure 10	4			ns
t_{H1}	SIP to CLK hold time	See Figure 10	2			ns
t_{SU2}	Falling edge to rising edge ($\overline{CE}$ to CLK) setup time	See Figure 11	4			ns
t_{REC}	$\overline{LD}$ to CLK recovery time	See Figure 8	2			ns
f_{CLK}	Clock pulse frequency (50% duty cycle)	See Figure 9	DC		100	MHz

6.7 Switching Characteristics

over operating free-air temperature range (unless otherwise noted)

SYMBOL	PARAMETER	TEST CONDITIONS	MIN	TYP	MAX	UNIT
t_{PLH1}, t_{PHL1}	CLK to SOP	C_L = 15 pF, see Figure 9			10	ns
t_{PLH2}, t_{PHL2}	$\overline{LD}$ to SOP	C_L = 15 pF, see Figure 7			14	ns
t_r, t_f	Rise and fall times	C_L = 15 pF, see Figure 9			5	ns

Copyright © 2016, Texas Instruments Incorporated

6.8 Typical Input Characteristics

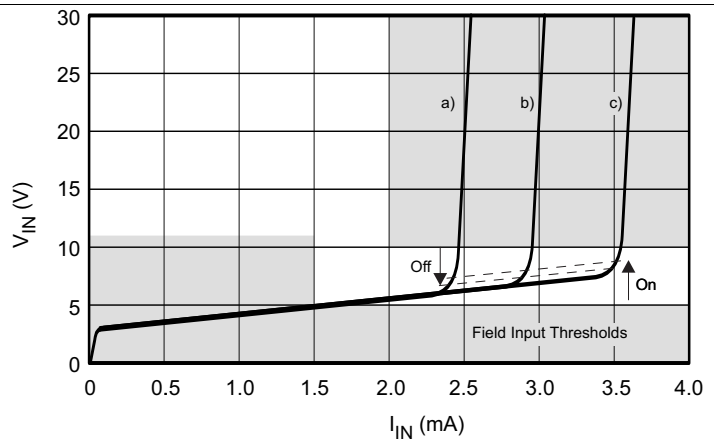

R_{IN} = 1.2 kΩ

a) $I_{IP\text{-}LIM}$ = 2.5 mA (R_{LIM} = 36.1 kΩ)
b) $I_{IP\text{-}LIM}$ = 3.0 mA (R_{LIM} = 30.1 kΩ)
c) $I_{IP\text{-}LIM}$ = 3.6 mA (R_{LIM} = 24.9 kΩ)

Figure 1. Typical Input Characteristics

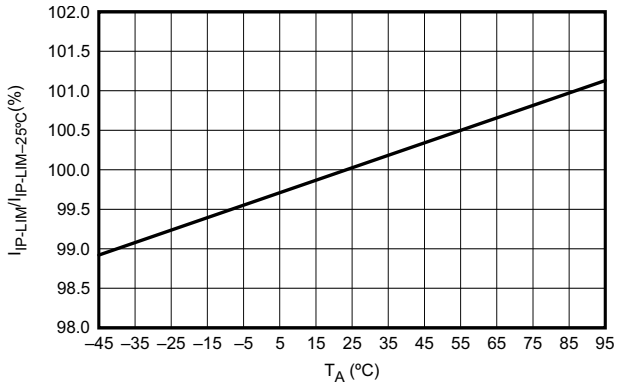

V24 = 24 V V_{IN} = 24 V R_{IN} = 1.2 kΩ
R_{LIM} = 24.9 kΩ

Figure 2. Typical Current Limiter Variation vs Ambient Temperature

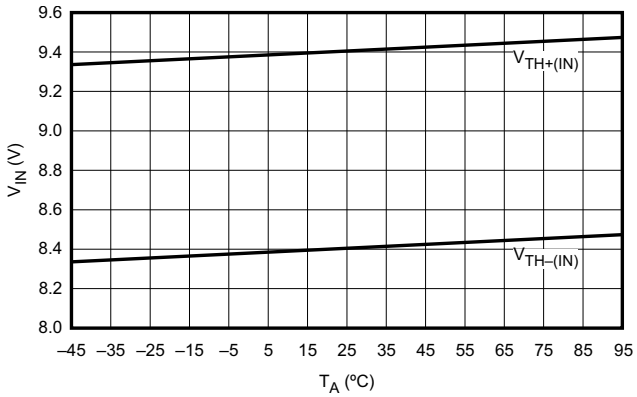

V24 = 24 V R_{IN} = 1.2 kΩ R_{LIM} = 24.9 kΩ

Figure 3. Typical Limiter Threshold Voltage Variation vs Ambient Temperature

6.9 Typical Voltage Regulator Performance Characteristics

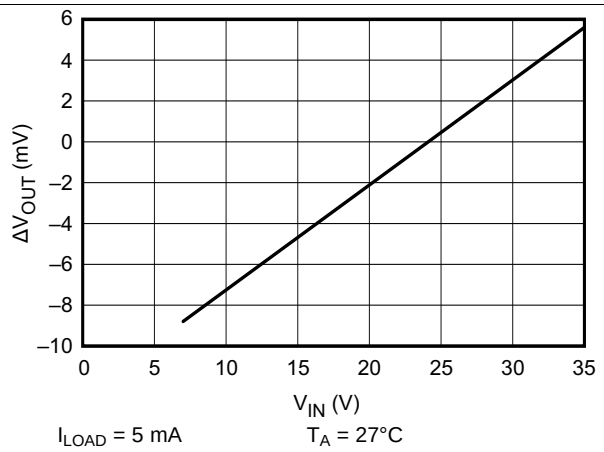

Figure 4. Line Regulation

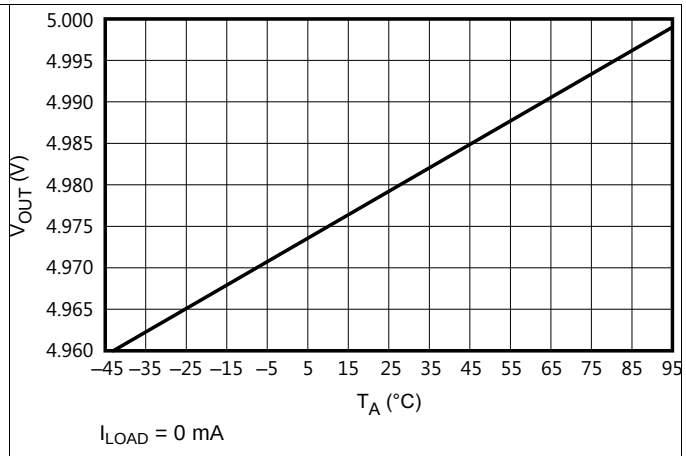

Figure 5. Output Voltage vs Ambient Temperature

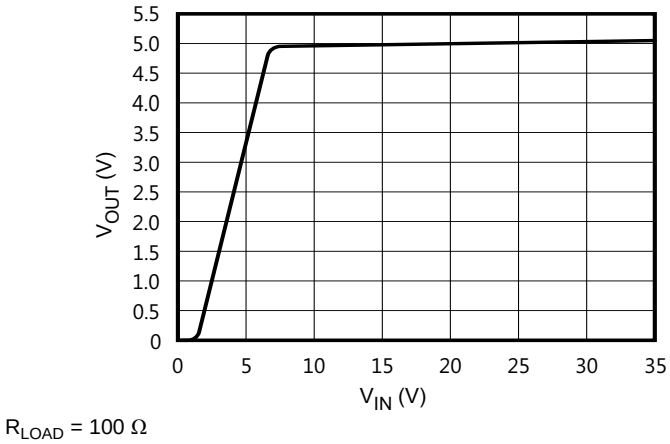

Figure 6. Output Voltage vs Input Voltage

Copyright © 2016, Texas Instruments Incorporated

7 Parameter Measurement Information

7.1 Waveforms

For the complete serial interface timing, refer to Figure 21.

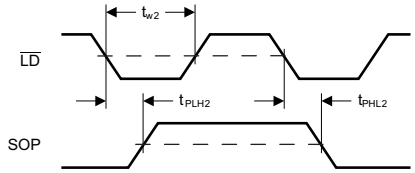

Figure 7. Parallel – Load Mode

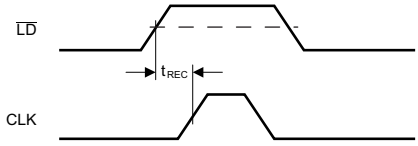

Figure 8. Serial – Shift Mode

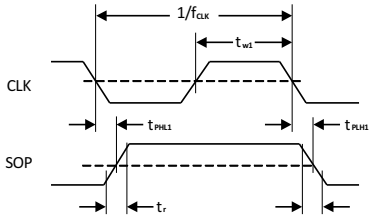

Figure 9. Serial – Shift Mode

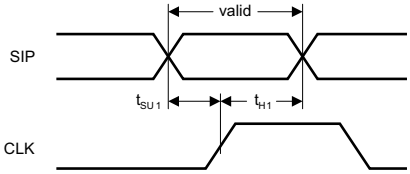

Figure 10. Serial – Shift Mode

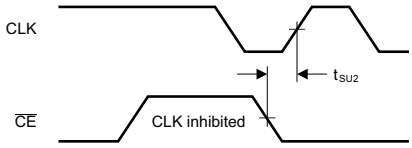

Figure 11. Serial – Shift Clock Inhibit Mode

7.2 Signal Conventions

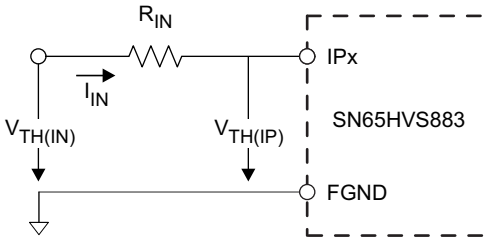

Copyright © 2016, Texas Instruments Incorporated

Figure 12. On/Off Threshold Voltage Measurements

8 Detailed Description

8.1 Overview

The SN65HVS883 is an 8 channel, digital input serializer which operates from a 24 V supply and accepts digital inputs of up to 34 V on the 8 channels (IP0-IP7). The device provides a serially shifted digital output with reduced voltage ranges of 0-5 V for applications in industrial and building automation systems. The SN65HVS883 meets JEDEC standards for ESD protection (refer to *ESD Ratings*), and is SPI compatible for interfacing with standard microcontrollers. The serializer operates in 2 fundamental modes: Load Mode and Shift mode. In Load mode, information from the field inputs is allowed to latch into the shift register. In Shift mode, the information stored in the parallel shift register can be serially shifted to the serial output (SOP). A detailed description of the functional modes is available in the *Device Functional Modes* section.

8.2 Functional Block Diagram

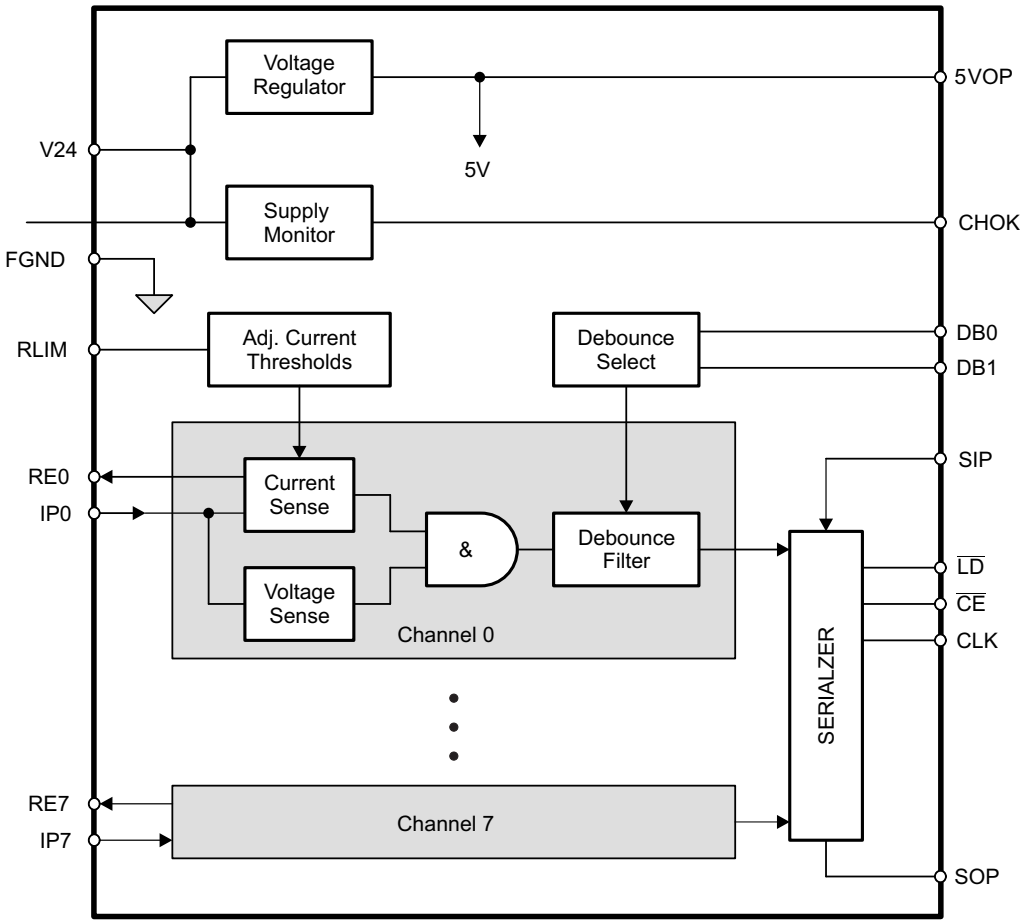

Copyright © 2016, Texas Instruments Incorporated

Copyright © 2016, Texas Instruments Incorporated

8.3 Feature Description

8.3.1 Digital Inputs

Each digital input operates as a controlled current sink limiting the input current to a maximum value of I_{LIM}. The current limit is derived from the reference current via $I_{LIM} = n \times I_{REF}$, and I_{REF} is determined by $I_{REF} = V_{REF}/R_{LIM}$. Thus, changing the current limit requires the change of R_{LIM} to a different value via: $R_{LIM} = n \times V_{REF}/I_{LIM}$.

Inserting the actual values for n and V_{REF} gives: $R_{LIM} = 90\ V / I_{LIM}$.

While the device is specified for a current limit of **3.6 mA**, (via $R_{LIM} = 25\ k\Omega$), it is easy to lower the current limit to further reduce the power consumption. For example, for a current limit of **2.5 mA** simply calculate:

$$R_{LIM} = \frac{90\ V}{I_{LIM}} = \frac{90\ V}{2.5\ mA} = 36\ k\Omega \tag{1}$$

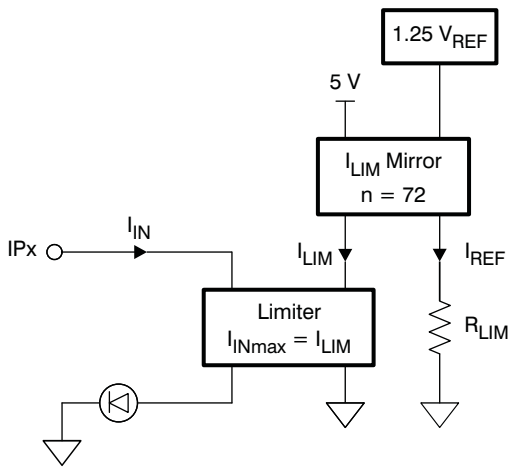

Figure 13. Digital Input Stage

8.3.2 Debounce Filter

The HVS883 applies a simple analog/digital filtering technique to remove unintended signal transitions due to contact bounce or other mechanical effects. Any new input (either low or high) must be present for the duration of the selected debounce time to be latched into the shift register as a valid state.

The logic signal levels at the control inputs, DB0 and DB1 of the internal Debounce-Select logic determine the different debounce times listed in the following truth table.

Table 1. Debounce Times

DB1	DB0	FUNCTION
Open	Open	3 ms delay
Open	FGND	1 ms delay
FGND	Open	0 ms delay (Filter bypassed)
FGND	FGND	Reserved

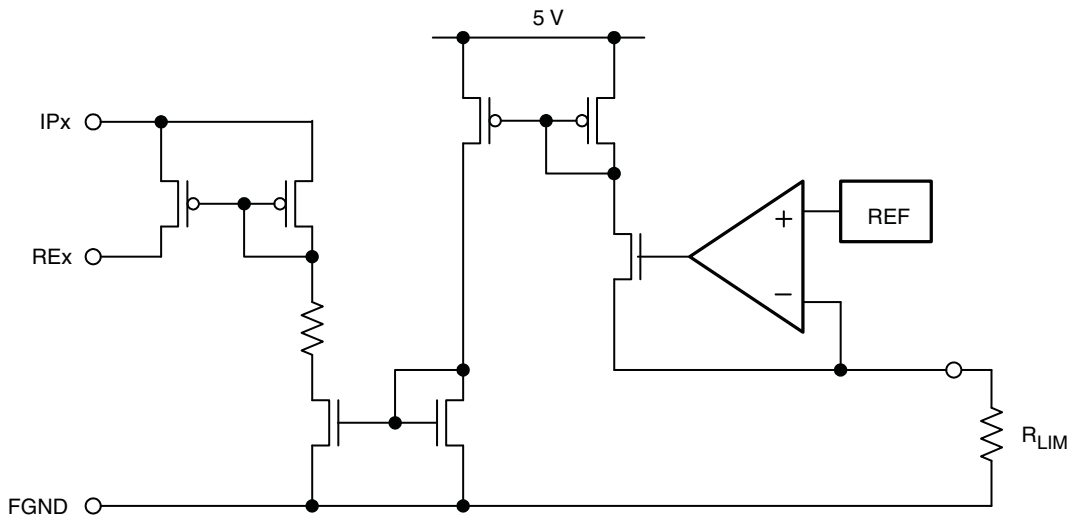

Figure 14. Equivalent Input Diagram

8.3.3 Shift Register

The conversion from parallel input to serial output data is performed by an eight-channel, parallel-in serial-out shift register. Parallel-in access is provided by the internal inputs, PIP0–PIP7, that are enabled by a low level at the load input ($\overline{LD}$). When clocked, the latched input data shift towards the serial output (SOP). The shift register also provides a clock-enable function.

Clocking is accomplished by a low-to-high transition of the clock (CLK) input while $\overline{LD}$ is held high and the clock enable ($\overline{CE}$) input is held low for all registers in the shift register except the last register which is latched by a high-to-low transition. Parallel loading is inhibited when LD is held high. The parallel inputs to the register are enabled while $\overline{LD}$ is low independently of the levels of the CLK, $\overline{CE}$, or serial (SIP) inputs.

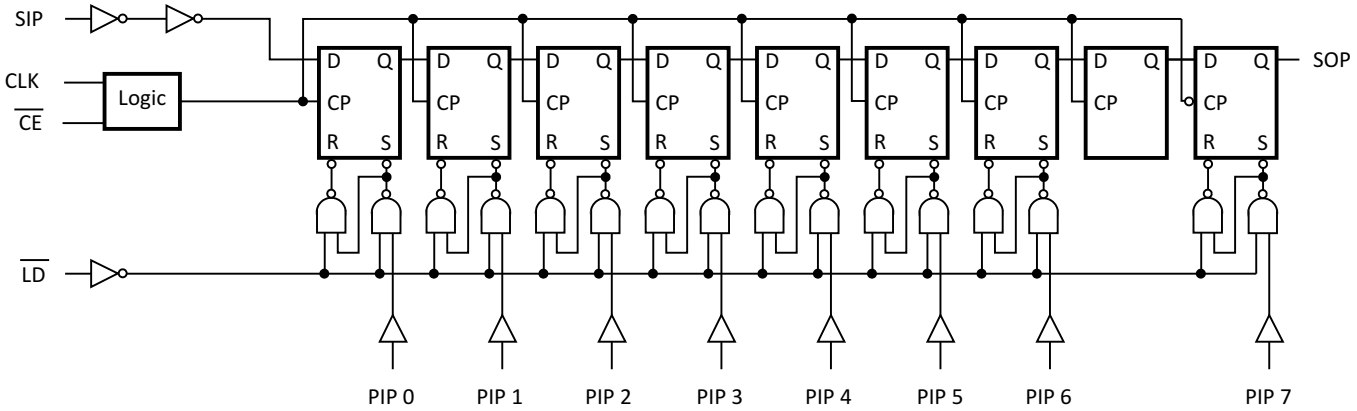

Figure 15. Shift Register Logic Structure

Copyright © 2016, Texas Instruments Incorporated

Table 2. Function Table

INPUTS			FUNCTION
$\overline{LD}$	CLK	$\overline{CE}$	
L	X	X	Parallel load
H	X	H	No change
H	↑	L	Shift(1)
H	↓	L	Shift(2)

(1) Shift = content of each internal register, except the last register, shifts towards serial output.
(2) Shift = content of the last register shifts towards serial output.

8.3.4 Voltage Regulator

The on-chip linear voltage regulator provides a 5 V supply to the internal- and external circuitry, such as digital isolators, with an output drive capability of 50 mA and a typical current limit of 115 mA. The regulator accepts input voltages from 34 V down to 10 V. Because the regulator output is intended to supply external digital isolator circuits proper output voltage decoupling is required. For best results connect a 1 µF and a 0.1 µF ceramic capacitor as close as possible to the 5VOP-output. For longer traces between the SN65HVS883 and isolators of the ISO72xx family use additional 0.1 µF and 10 pF capacitors next to the isolator supply pins. Make sure, however, that the total load capacitance does not exceed 4.7 µF.

For good stability the voltage regulator requires a minimum load current, $I_{L\text{-}MIN}$. Ensure that under any operating condition the ratio of the minimum load current in mA to the total load capacitance in µF is larger than 1:

$$\frac{I_{L\text{-}MIN}}{C_L} > \frac{1\ \text{mA}}{1\ \mu\text{F}} \tag{2}$$

8.3.5 Supply Voltage Monitor

The integrated supply voltage monitor senses the supply voltage of the SN65HVS883 at the V24-pin. If this voltage drops below 15 V but stays within the regulator's operating range, i.e., 15 V > V24 > 10 V, the output CHOK goes low 1 ms later. When the supply voltage returns to 24 V, the CHOK output turns logic high after 6 ms. Should the supply voltage drop below 10 V, the device ceases operation. Upon the supply returning to above 18 V, the CHOK output turns high again after 6 ms.

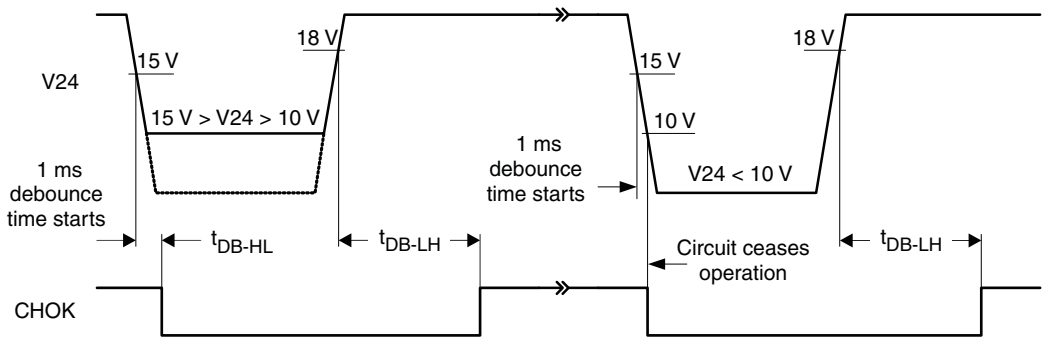

Figure 16. CHOK Output Timing as a Function of Supply Voltage Drop at V24

8.4 Device Functional Modes

The 2 functional modes of operation are Load mode and Shift mode.

Load mode enables information from the field inputs to latch into the shift register. To enter load mode, the $\overline{LD}$ pin must be held low, and the device remains in load mode regardless of the CLK, $\overline{CE}$, or serial (SIP) input levels. A high level at the $\overline{LD}$ pin switches the device into Shift mode.

When the device is in Shift mode, a low level at the $\overline{CE}$ pin causes the data stored in all registers of the parallel shift register except for the last register, to be serially shifted toward the serial output (SOP) on the rising edge of CLK. The final register in the shift register will be shifted toward the serial output (SOP) on the falling edge of CLK. A high level at the $\overline{CE}$ pin inhibits the serial shifting, which is demonstrated in Figure 21. After 8 consecutive CLK cycles, the serial output (SOP) remains at the level of the serial input (SIP) which is internally pulled to logic high. A logic high at the $\overline{CE}$ pin is required to signify the end of the serial data output. For of a daisy chained configuration, the serial output (SOP) of the SN65HVS883 can be connected to the serial input (SIP) of a following device, and additional clock cycles are required to shift the additional data out of the chain. The number of consecutive clock cycles will equal 8 times the number of devices in the chain. See Figure 22 for an example of a cascaded chain of 4x SN65HVS883.

Copyright © 2016, Texas Instruments Incorporated

9 Application and Implementation

NOTE

Information in the following applications sections is not part of the TI component specification, and TI does not warrant its accuracy or completeness. TI's customers are responsible for determining suitability of components for their purposes. Customers should validate and test their design implementation to confirm system functionality.

9.1 Application Information

9.1.1 System-Level EMC

The SN65HVS883 must operate reliably in harsh industrial environments. At a system level, the device is tested according to several international electromagnetic compatibility (EMC) standards.

In addition to the device internal ESD structures, external protection circuitry, such as the one in Figure 17, can be used to absorb as much energy from burst- and surge-transients as possible.

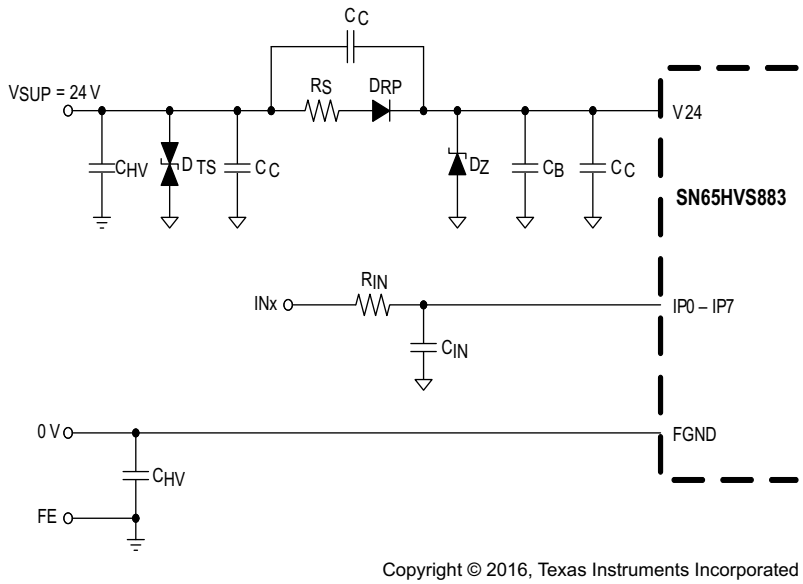

Figure 17. Typical EMC Protection Circuitry for Supply and Signal Inputs

Table 3. Components

DESIGNATOR	DESCRIPTION
D_{TS}	39 V Transient Voltage Suppressor: SM15T39CA
D_{RP}	Super Rectifier: BYM10-1000, or General Purpose rectifier: 1N4007
D_Z	33 V – 36 V fast Zener Diode, Z2SMB36
R_S	56 Ω, 1/3 W MELF Resistor
R_{IN}	1.2 kΩ, 1/4 W MELF Resistor
C_{IN}	22 nF, 60 V Ceramic Capacitor
C_{HV}	4.7 nF, 2 kV Ceramic Capacitor
C_C	n x 220 nF, 60 V Ceramic Capacitors
C_B	1 µF - 10 µF, 60 V Ceramic Capacitor

9.1.2 Input Channel Switching Characteristics

The input stage of the SN65HVS883 is so designed, that for an input resistor R_{IN} = 1.2 kΩ the trip point for signalling an ON-condition is at 9.4 V at 3.6 mA. This trip point satisfies the switching requirements of IEC61131-2 Type 1 and Type 3 switches.

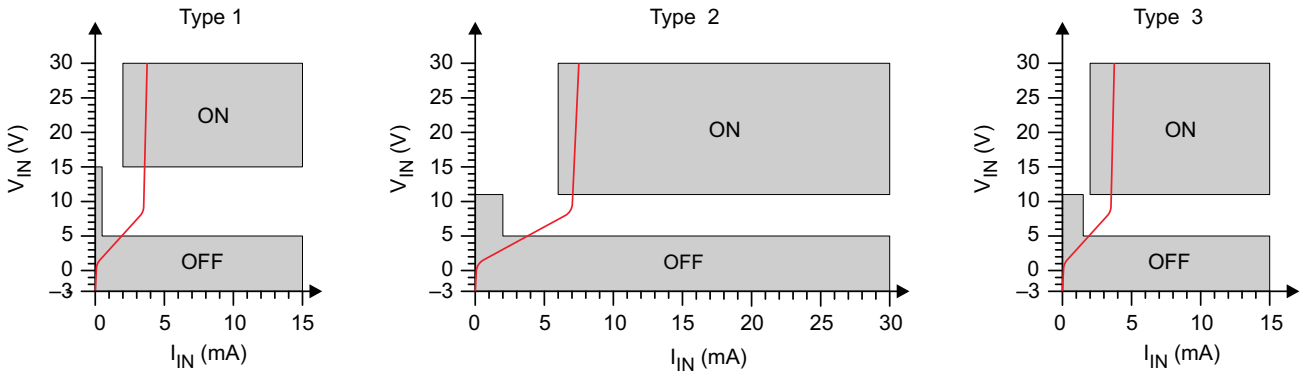

Figure 18. Switching Characteristics for IEC61131-2 Type 1, 2, and 3 Proximity Switches

For a Type 2 switch application, two inputs are connected in parallel. The current limiters then add to a total maximum current of 7.2 mA. While the return-path (RE-pin), of one input might be used to drive an indicator LED, the RE-pin of the other input channel should be connected to ground (FGND).

Paralleling input channels reduces the number of available input channels from an octal Type 1 or Type 3 input to a quad Type 2 input device. Note, that in this configuration output data of an input channel is represented by two shift register bits.

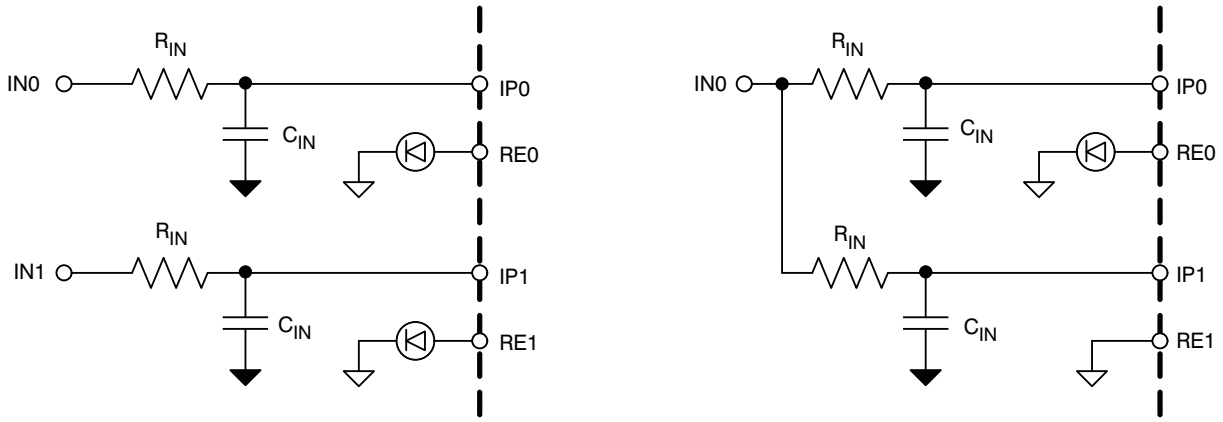

Figure 19. Paralleling Two Type 1 or Type 3 Inputs Into One Type 2 Input

Copyright © 2016, Texas Instruments Incorporated

9.1.3 Digital Interface Timing

The digital interface of the SN65HVS883 is SPI compatible and interfaces, isolated or non-isolated, to a wide variety of standard micro controllers.

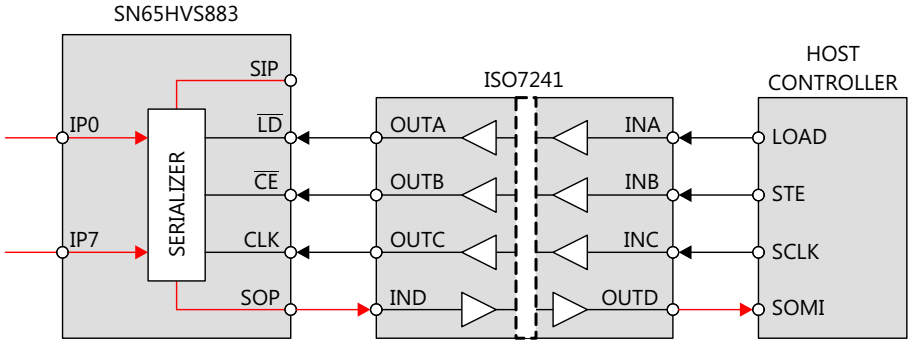

Figure 20. Simple Isolation of the Shift Register Interface

Upon a low-level at the load input, $\overline{LD}$, the information of the field inputs, IP0 to IP7 is latched into the shift register. Taking $\overline{LD}$ high again blocks the parallel inputs of the shift register from the field inputs. A low-level at the clock-enable input, $\overline{CE}$, enables the clock signal, CLK, to serially shift the data to the serial output, SOP. Data is clocked into the shift register at the rising edge of CLK and out of the shift register on the falling edge of CLK. Thus after eight consecutive clock cycles all field input data have been clocked out of the shift register and the information of the serial input, SIP, appears at the serial output, SOP.

The $\overline{CE}$ signal should only be transitioned low while the CLK signal is low which ensures that a rising edge of CLK occurs before a falling edge of CLK. This shifts the data into and through the shift register up until the final register before the first bit that was loaded into the final register is shifted out the serial output, SOP. If a falling edge of CLK is seen first following the transition of $\overline{CE}$ to low, the final register outputs the first bit, IP0, on the serial output, SOP, before shifting the rest of the bits through the shift register. The previous value of the second to last register prior to the $\overline{LD}$ event will then be shifted into the final register on the next rising CLK edge and output on the serial output, SOP, before the next valid bit, IP1, is output on the serial output, SOP. This appears as an erroneous bit in the serial data. Also, depending on how many falling CLK edges were seen before the $\overline{CE}$ signal is transitioned back high, the final bit, IP7, may not get shifted out of the shift register.

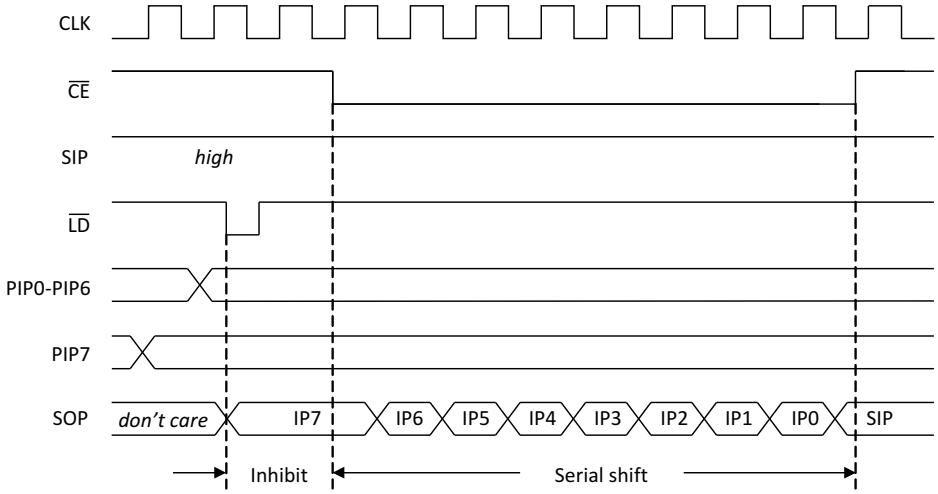

Figure 21. Interface Timing for Parallel-Load and Serial-Shift Operation of the Shift Register

9.1.4 Cascading for High Channel Count Input Modules

Designing high-channel count modules require cascading multiple SN65HVS883 devices. Simply connect the serial output (SOP) of a leading device with the serial input (SIP) of a following device without changing the processor interface.

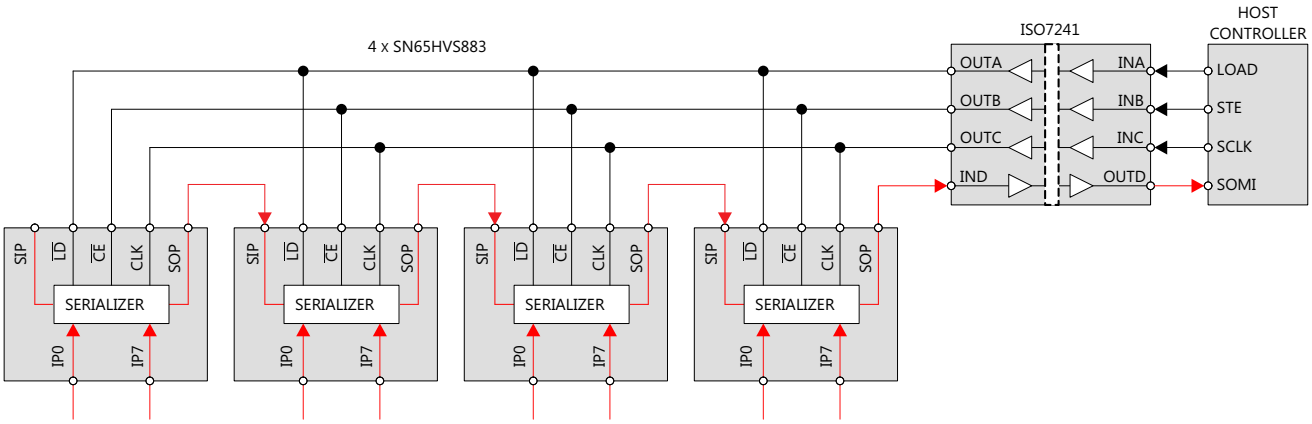

Figure 22. Cascading Four SN65HVS883 for a 32-Channel Input Module

NOTE

When daisy-chaining multiple devices, the maximum operating rate (CLK pulse width) may need to be restricted in order to maintain minimum set-up/hold timing relationships between the serial data (SIP/SOP) and the CLK line.

9.2 Typical Application

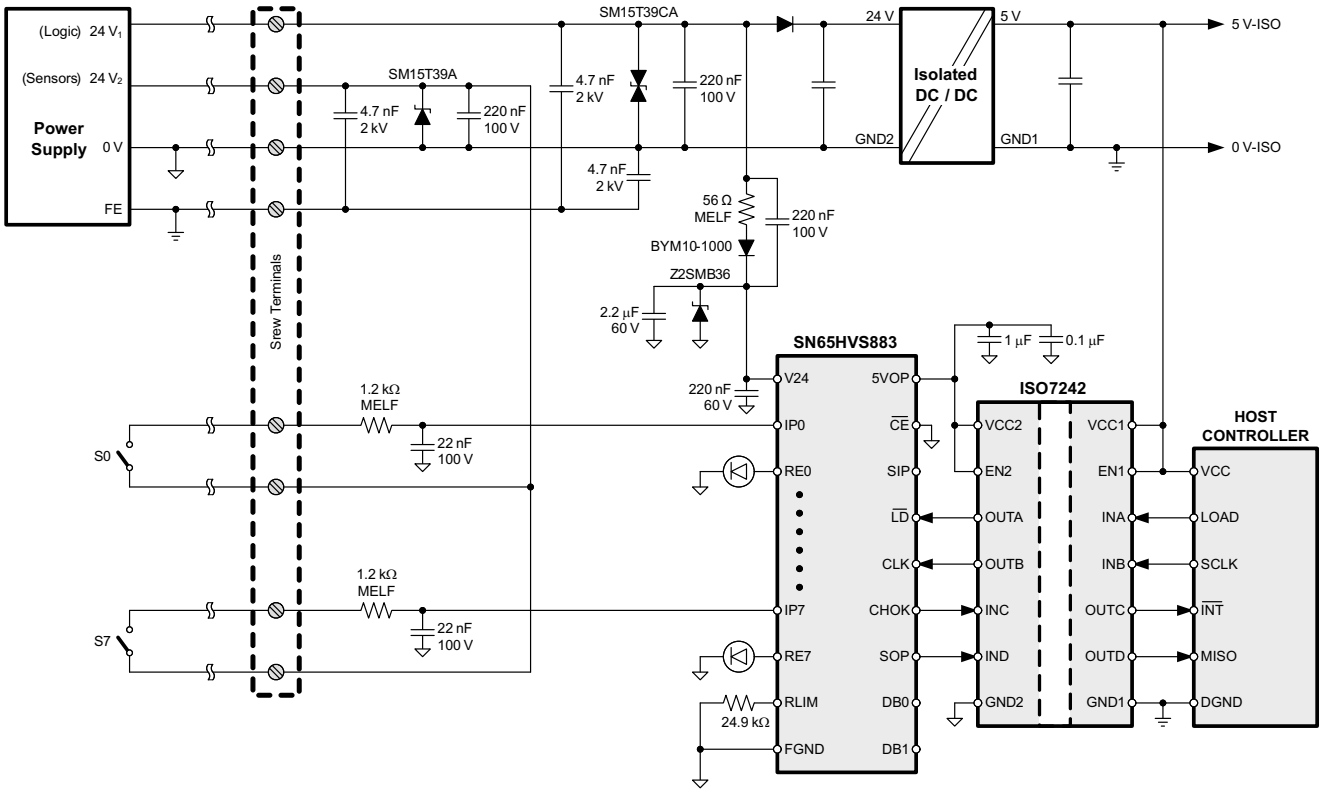

Copyright © 2016, Texas Instruments Incorporated

Figure 23. Typical Digital Input Module Application

Copyright © 2016, Texas Instruments Incorporated

Typical Application (continued)

9.2.1 Design Requirements

The simplified schematic in Figure 23 demonstrates a typical application of the SN65HVS883 for sensing the state of digital switches with 24-V high logic levels. In this application, a 5-V host controller must receive the state of 8 switches as a serial input, while remaining isolated from the high voltage power supply.

9.2.2 Detailed Design Procedure

9.2.2.1 Input Stage

Selection of the current limiting resistor R_{LIM} sets the input current limit I_{LIM} for the device. *Digital Inputs* includes necessary equations for choosing the limiting resistor.

The On/Off voltage thresholds at the device pin $V_{TH(IP+)}$ and $V_{TH(IP-)}$ are fixed to 5.2 V and 4.3 V respectively, however the On/Off voltage thresholds of the field input $V_{TH(IN+)}$ and $V_{TH(IN-)}$ are determined by the value of the series resistor RIN placed between the field input and the device. The threshold voltage $V_{TH(IN+)}$ is determined with the following equation:

$$V_{TH(IN+)} = I_{IN} \times R_{IN} + V_{TH(IP+)} \tag{3}$$

Substituting Equation 1 and solving for R_{IN} produces an equation for R_{IN} given a desired on-threshold.

$$R_{IN} = \frac{(V_{TH(IN+)} - 5.2V) \times R_{LIM}}{90V} \tag{4}$$

The following equation can be used to calculate the off-threshold voltage given a value for R_{IN}

$$V_{TH(IN-)} = \frac{90V \times R_{IN}}{R_{LIM}} + V_{TH(IP-)} \tag{5}$$

Figure 24 contains an example input characteristic:

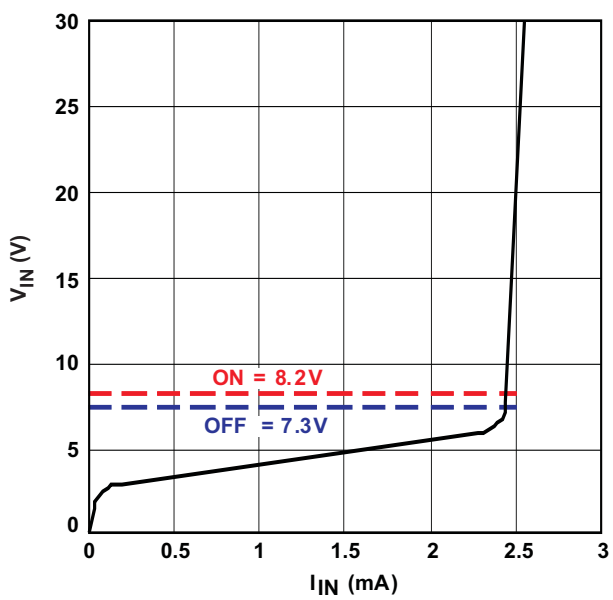

Figure 24. SN65HVS883 Example Input Characteristic

Typical Application (continued)

9.2.2.2 Setting Debounce Time

The logic signals at the DB0 and DB1 pins determine the denounce times for the device according to the table in section 6.5. The DB0 and DB1 pins are internally pulled high. Connecting the pins to GND in different configurations allows for selection of 0, 1, or 3 ms debounce times. In noisy environments, it is recommended that unused DB pins should be connected externally to a 5 V supply.

9.2.2.3 Example: High-Voltage Sensing Application

For the high-voltage sensing application in Figure 23, inputs from each switch (S0-S7) are connected to the 8 parallel inputs (IP0-IP7) of the SN65HVS883 through 1.2 kΩ MELF resistors. Small capacitors (22 nF) are tied to ground at each input to provide noise protection for the signals. A resistor is added between the R_{LIM} pin and GND to provide a device current limit according to the equation I_{LIM} = 90 V / R_{LIM}. In this example, with a 24.9 kΩ resistor, the current limit for the device is set to 3.6 mA. LEDs are placed between pins RE0-RE7 to allow for external status observation of the parallel inputs. Finally the SN65HVS883 is connected through a digital isolation device to the host controller to provide galvanic isolation to the external interfaces and to allow for communication between the 5 V SN65HVS883 logic and the 5-V host controller. The host controller manages mode switching and clocking of the SN65HVS883 through the digital isolation device.

9.2.3 Application Curve

The application traces acquired in Figure 25 demonstrates the typical behavior of the SN65HVD883 when in shift mode (Load Pulse Input pulled high and Clock Enable Input pulled low). Channel 1 shows the SIP input, Channel 2 shows the CLK input, and Channel 3 shows the SOP output.

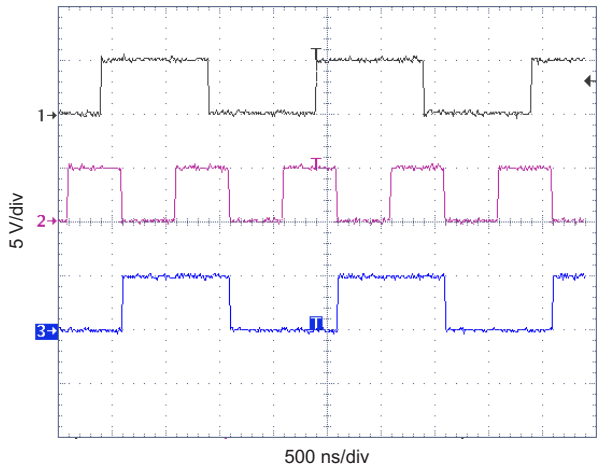

Figure 25. SN65HVS883 Serial Input and Output Timing

Copyright © 2016, Texas Instruments Incorporated

10 Power Supply Recommendations

The SN65HVS883 operates within a recommended supply voltage range from 4.5 V to 5.5 V. A 0.1 µF or larger capacitor should be placed between V_{CC} and ground to improve power supply noise immunity. A current limiting resistor can be used to reduce overall power consumption as described in *Digital Inputs*. The high voltage parallel field inputs can accept voltages ranging from 0 V to 34 V, however all other inputs must remain between 0 V to 5 V. Refer to the *Recommended Operating Conditions* table for more detailed voltage suggestions. High voltage field inputs should be buffered as shown in Figure 23 to improve input noise immunity.

11 Layout

11.1 Layout Guidelines

1. Place series MELF resistors between the field inputs and the device input pins.
2. Place small ~22 nF capacitors close to the field input pins to reduce noise.
3. Place a supply buffering 0.1-µF capacitor around as close to the V_{CC} pin as possible.

11.2 Layout Example

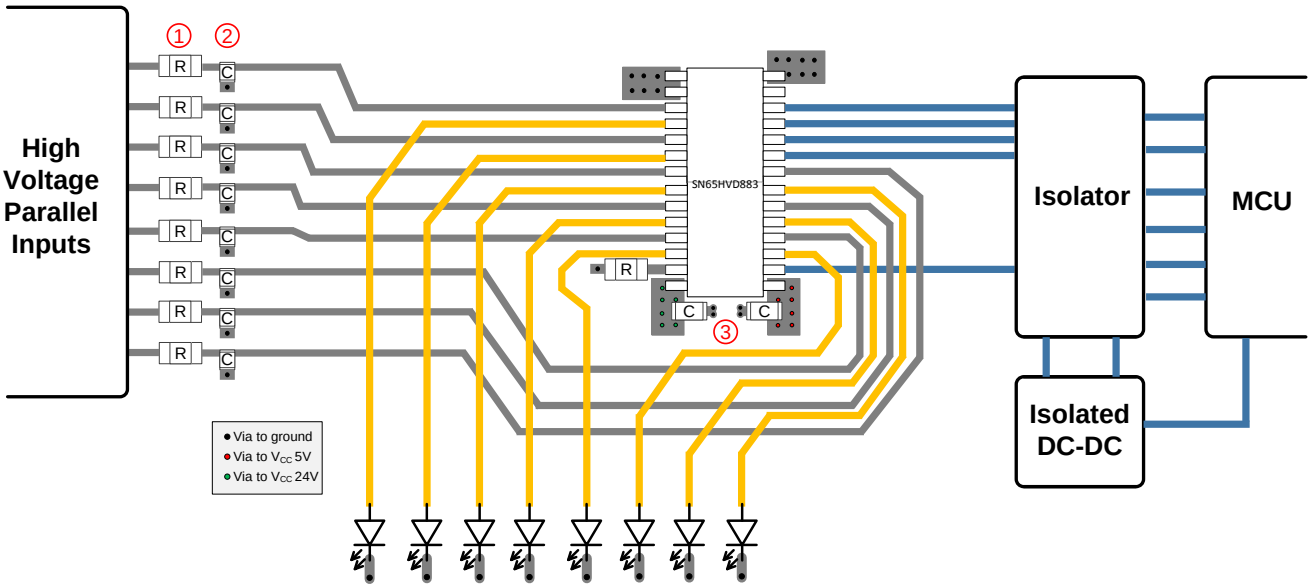

12 Device and Documentation Support

12.1 Third-Party Products Disclaimer

TI'S PUBLICATION OF INFORMATION REGARDING THIRD-PARTY PRODUCTS OR SERVICES DOES NOT CONSTITUTE AN ENDORSEMENT REGARDING THE SUITABILITY OF SUCH PRODUCTS OR SERVICES OR A WARRANTY, REPRESENTATION OR ENDORSEMENT OF SUCH PRODUCTS OR SERVICES, EITHER ALONE OR IN COMBINATION WITH ANY TI PRODUCT OR SERVICE.

12.2 Receiving Notification of Documentation Updates

To receive notification of documentation updates, navigate to the device product folder on ti.com. In the upper right corner, click on *Alert me* to register and receive a weekly digest of any product information that has changed. For change details, review the revision history included in any revised document.

12.3 Community Resources

The following links connect to TI community resources. Linked contents are provided "AS IS" by the respective contributors. They do not constitute TI specifications and do not necessarily reflect TI's views; see TI's Terms of Use.

TI E2E™ Online Community ***TI's Engineer-to-Engineer (E2E) Community.*** Created to foster collaboration among engineers. At e2e.ti.com, you can ask questions, share knowledge, explore ideas and help solve problems with fellow engineers.

Design Support ***TI's Design Support*** Quickly find helpful E2E forums along with design support tools and contact information for technical support.

12.4 Trademarks

PowerPAD, E2E are trademarks of Texas Instruments.
All other trademarks are the property of their respective owners.

12.5 Electrostatic Discharge Caution

These devices have limited built-in ESD protection. The leads should be shorted together or the device placed in conductive foam during storage or handling to prevent electrostatic damage to the MOS gates.

12.6 Glossary

SLYZ022 — *TI Glossary*.

This glossary lists and explains terms, acronyms, and definitions.

13 Mechanical, Packaging, and Orderable Information

The following pages include mechanical, packaging, and orderable information. This information is the most current data available for the designated devices. This data is subject to change without notice and revision of this document. For browser-based versions of this data sheet, refer to the left-hand navigation.

Copyright © 2016, Texas Instruments Incorporated

PACKAGING INFORMATION

Orderable part number	Status (1)	Material type (2)	Package | Pins	Package qty | Carrier	RoHS (3)	Lead finish/ Ball material (4)	MSL rating/ Peak reflow (5)	Op temp (°C)	Part marking (6)
SN65HVS883PWPR	Active	Production	HTSSOP (PWP) | 28	2000 | LARGE T&R	Yes	NIPDAU	Level-2-260C-1 YEAR	-40 to 85	HVS883
SN65HVS883PWPR.A	Active	Production	HTSSOP (PWP) | 28	2000 | LARGE T&R	Yes	NIPDAU	Level-2-260C-1 YEAR	-40 to 85	HVS883

(1) **Status:** For more details on status, see our product life cycle.

(2) **Material type:** When designated, preproduction parts are prototypes/experimental devices, and are not yet approved or released for full production. Testing and final process, including without limitation quality assurance, reliability performance testing, and/or process qualification, may not yet be complete, and this item is subject to further changes or possible discontinuation. If available for ordering, purchases will be subject to an additional waiver at checkout, and are intended for early internal evaluation purposes only. These items are sold without warranties of any kind.

(3) **RoHS values:** Yes, No, RoHS Exempt. See the TI RoHS Statement for additional information and value definition.

(4) **Lead finish/Ball material:** Parts may have multiple material finish options. Finish options are separated by a vertical ruled line. Lead finish/Ball material values may wrap to two lines if the finish value exceeds the maximum column width.

(5) **MSL rating/Peak reflow:** The moisture sensitivity level ratings and peak solder (reflow) temperatures. In the event that a part has multiple moisture sensitivity ratings, only the lowest level per JEDEC standards is shown. Refer to the shipping label for the actual reflow temperature that will be used to mount the part to the printed circuit board.

(6) **Part marking:** There may be an additional marking, which relates to the logo, the lot trace code information, or the environmental category of the part.

Multiple part markings will be inside parentheses. Only one part marking contained in parentheses and separated by a "~" will appear on a part. If a line is indented then it is a continuation of the previous line and the two combined represent the entire part marking for that device.

Important Information and Disclaimer: The information provided on this page represents TI's knowledge and belief as of the date that it is provided. TI bases its knowledge and belief on information provided by third parties, and makes no representation or warranty as to the accuracy of such information. Efforts are underway to better integrate information from third parties. TI has taken and continues to take reasonable steps to provide representative and accurate information but may not have conducted destructive testing or chemical analysis on incoming materials and chemicals. TI and TI suppliers consider certain information to be proprietary, and thus CAS numbers and other limited information may not be available for release.

In no event shall TI's liability arising out of such information exceed the total purchase price of the TI part(s) at issue in this document sold by TI to Customer on an annual basis.

GENERIC PACKAGE VIEW

PWP 28

PowerPAD™ TSSOP - 1.2 mm max height

4.4 x 9.7, 0.65 mm pitch

SMALL OUTLINE PACKAGE

This image is a representation of the package family, actual package may vary.
Refer to the product data sheet for package details.

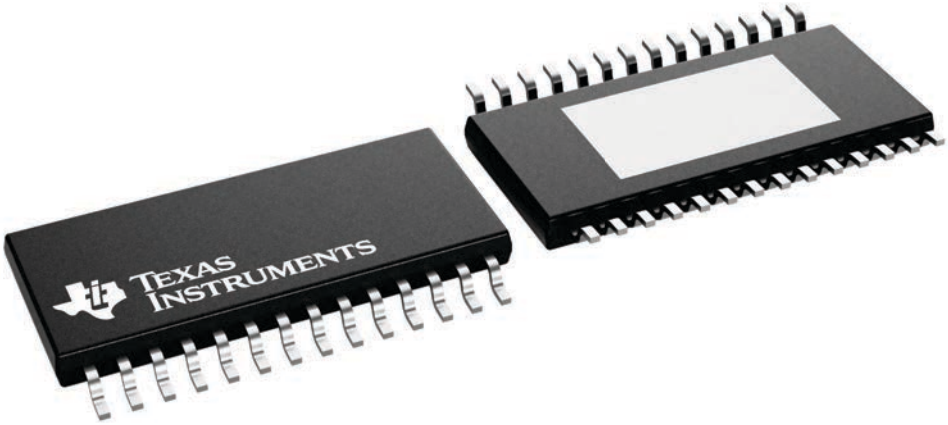

4224765/B

IMPORTANT NOTICE AND DISCLAIMER

TI PROVIDES TECHNICAL AND RELIABILITY DATA (INCLUDING DATASHEETS), DESIGN RESOURCES (INCLUDING REFERENCE DESIGNS), APPLICATION OR OTHER DESIGN ADVICE, WEB TOOLS, SAFETY INFORMATION, AND OTHER RESOURCES “AS IS” AND WITH ALL FAULTS, AND DISCLAIMS ALL WARRANTIES, EXPRESS AND IMPLIED, INCLUDING WITHOUT LIMITATION ANY IMPLIED WARRANTIES OF MERCHANTABILITY, FITNESS FOR A PARTICULAR PURPOSE OR NON-INFRINGEMENT OF THIRD PARTY INTELLECTUAL PROPERTY RIGHTS.

These resources are intended for skilled developers designing with TI products. You are solely responsible for (1) selecting the appropriate TI products for your application, (2) designing, validating and testing your application, and (3) ensuring your application meets applicable standards, and any other safety, security, regulatory or other requirements.

These resources are subject to change without notice. TI grants you permission to use these resources only for development of an application that uses the TI products described in the resource. Other reproduction and display of these resources is prohibited. No license is granted to any other TI intellectual property right or to any third party intellectual property right. TI disclaims responsibility for, and you fully indemnify TI and its representatives against any claims, damages, costs, losses, and liabilities arising out of your use of these resources.

TI’s products are provided subject to TI’s Terms of Sale, TI’s General Quality Guidelines, or other applicable terms available either on ti.com or provided in conjunction with such TI products. TI’s provision of these resources does not expand or otherwise alter TI’s applicable warranties or warranty disclaimers for TI products. Unless TI explicitly designates a product as custom or customer-specified, TI products are standard, catalog, general purpose devices.

TI objects to and rejects any additional or different terms you may propose.

Copyright © 2026, Texas Instruments Incorporated

Last updated 10/2025