SN74AHC3G99-Q1 Automotive Triple Ultra-Configurable Multiple-Function Gates With 3-State Outputs and Schmitt-Trigger Inputs

1 Features

- AEC-Q100 qualified for automotive applications:
  - Device temperature grade 1: -40°C to +125°C
  - Device HBM ESD classification level 2
  - Device CDM ESD classification level C4B
- Available in wettable flank QFN package
- Supply operating range 2V to 5.5V
- Low delay, 21.8ns max at 5V, 50pF load
- Latch-up performance exceeds 100mA per JESD 17

2 Applications

- Combine power good signals
- Combine enable signals
- Eliminate slow or noisy input signals
- Synchronize inverted clock inputs
- Debounce a switch
- Use fewer inputs to monitor error signals
- Data selection
- Multiplexing

3 Description

The SN74AHC3G99-Q1 device contains three independent configurable logic gates with 3-state outputs. Each gate has four inputs and performs the Boolean function $Y = (A \cdot \overline{C} + B \cdot C) \oplus D$. All inputs include Schmitt-triggers, eliminating any erroneous data outputs due to slow-edged or noisy input signals. The user can choose logic functions, such as MUX, AND, OR, NAND, NOR, XOR, XNOR, inverter, and buffer by connecting the inputs A, B, C, and D appropriately.

Package Information

PART NUMBER	PACKAGE(1)	PACKAGE SIZE(2)	BODY SIZE(3)
SN74AHC3G99-Q1	PW (TSSOP, 20)	6.5mm × 6.4mm	6.5mm × 4.4mm
	DGS (VSSOP, 20)	5.1mm × 4.9mm	5.1mm × 3.0mm
	RKS (VQFN, 20)	4.5mm × 2.5mm	4.5mm × 2.5mm

(1) For more information, see Mechanical, Packaging, and Orderable Information.
(2) The package size (length × width) is a nominal value and includes pins, where applicable.
(3) The body size (length × width) is a nominal value and does not include pins.

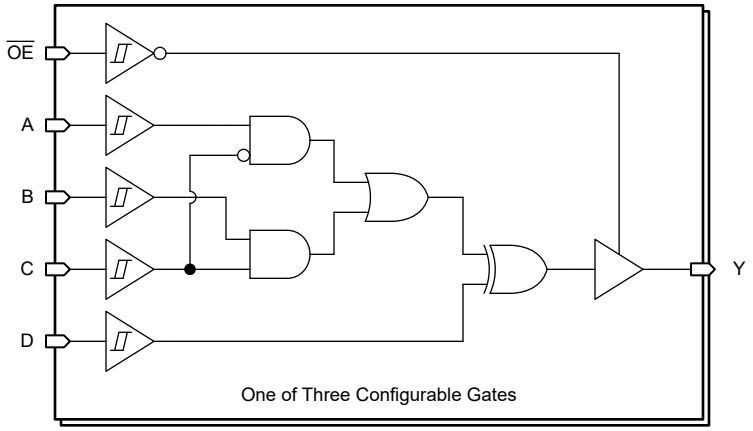

Functional Block Diagram

An IMPORTANT NOTICE at the end of this data sheet addresses availability, warranty, changes, use in safety-critical applications, intellectual property matters and other important disclaimers. PRODUCTION DATA.

Table of Contents

1 Features....1
2 Applications....1
3 Description....1
4 Pin Configuration and Functions....3
5 Specifications....4
5.1 Absolute Maximum Ratings....4
5.2 ESD Ratings....4
5.3 Recommended Operating Conditions....4
5.4 Thermal Information....4
5.5 Electrical Characteristics....5
5.6 Switching Characteristics....5
5.7 Noise Characteristics....7
5.8 Typical Characteristics....7
6 Parameter Measurement Information....9
7 Detailed Description....10
7.1 Overview....10
7.2 Functional Block Diagram....10
7.3 Combinatorial Logic Configurations....10
7.4 Feature Description....13
7.5 Device Functional Modes....15
8 Application and Implementation....17
8.1 Application Information....17
8.2 Typical Application....17
8.3 Power Supply Recommendations....21
8.4 Layout....21
9 Device and Documentation Support....23
9.1 Documentation Support....23
9.2 Receiving Notification of Documentation Updates....23
9.3 Support Resources....23
9.4 Trademarks....23
9.5 Electrostatic Discharge Caution....23
9.6 Glossary....23
10 Revision History....23
11 Mechanical, Packaging, and Orderable Information....24

Copyright © 2025 Texas Instruments Incorporated

4 Pin Configuration and Functions

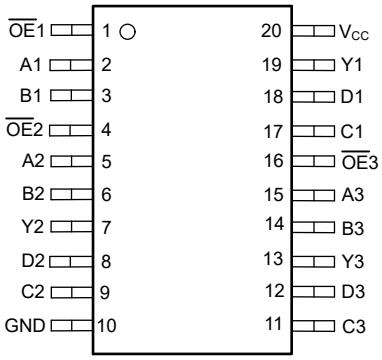

Figure 4-1. PW or DGS Package, 20-Pin TSSOP or VSSOP (Top View)

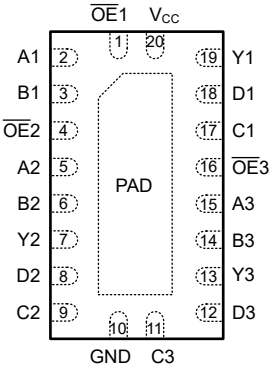

Figure 4-2. RKS Package, 20-Pin VQFN (Transparent Top View)

Table 4-1. Pin Functions

PIN		TYPE[1]	DESCRIPTION
NAME	NO.		
A1	2	I	Channel 1, Input A
A2	5	I	Channel 2, Input A
A3	15	I	Channel 3, Input A
B1	3	I	Channel 1, Input B
B2	6	I	Channel 2, Input B
B3	14	I	Channel 3, Input B
C1	17	I	Channel 1, Input C
C2	9	I	Channel 2, Input C
C3	11	I	Channel 3, Input C
D1	18	I	Channel 1, Input D
D2	8	I	Channel 2, Input D
D3	12	I	Channel 3, Input D
GND	10	G	Ground
$\overline{OE}$1	1	I	Output enable input for Channel 1, active-low
$\overline{OE}$2	4	I	Output enable input for Channel 2, active-low
$\overline{OE}$3	16	I	Output enable input for Channel 3, active-low
Thermal Pad[2]		—	The thermal pad can be connect to GND or left floating. Do not connect to any other signal or supply.
V_{CC}	20	P	Positive supply
Y1	19	O	Channel 1, Output Y
Y2	7	O	Channel 2, Output Y
Y3	13	O	Channel 3, Output Y

(1) I = Input, O = Output, I/O = Input or Output, G = Ground, P = Power
(2) RKS package only.

Copyright © 2025 Texas Instruments Incorporated

5 Specifications

5.1 Absolute Maximum Ratings

over operating free-air temperature range (unless otherwise noted)[1]

			MIN	MAX	UNIT
V_{CC}	Supply voltage range		–0.5	7	V
V_I	Input voltage range[2]		–0.5	7	V
V_O	Voltage range applied to any output in the high-impedance or power-off state[2]		–0.5	7	V
V_O	Output voltage range[2]		–0.5	V_{CC} + 0.5	V
I_{IK}	Input clamp current	V_I < -0.5V		-20	mA
I_{OK}	Output clamp current	V_O < -0.5V or V_O > V_{CC} + 0.5V		±20	mA
I_O	Continuous output current	V_O = 0 to V_{CC}		±25	mA
	Continuous output current through V_{CC} or GND			±75	mA
T_J	Junction temperature			150	°C
T_{stg}	Storage temperature		-65	150	°C

(1) Operation outside the *Absolute Maximum Ratings* may cause permanent device damage. Absolute maximum ratings do not imply functional operation of the device at these or any other conditions beyond those listed under *Recommended Operating Conditions*. If briefly operating outside the *Recommended Operating Conditions* but within the *Absolute Maximum Ratings*, the device may not sustain damage, but it may not be fully functional. Operating the device in this manner may affect device reliability, functionality, performance, and shorten the device lifetime.
(2) The input and output voltage ratings may be exceeded if the input and output current ratings are observed.

5.2 ESD Ratings

			VALUE	UNIT
$V_{(ESD)}$	Electrostatic discharge	Human body model (HBM), per AEC Q100-002 HBM ESD Classification Level 2[1]	±2000	V
		Charged device model (CDM), per AEC Q100-011 CDM ESD Classification Level C4B	±1000	

(1) AEC Q100-002 indicate that HBM stressing shall be in accordance with the ANSI/ESDA/JEDEC JS-001 specification.

5.3 Recommended Operating Conditions

over operating free-air temperature range (unless otherwise noted)

Spec	Description	Condition	MIN	MAX	UNIT
V_{CC}	Supply voltage		2	5.5	V
V_I	Input Voltage		0	5.5	V
V_O	Ouptut Voltage		0	V_{CC}	V
I_{OH}	High-level output current	V_{CC} = 2V		-50	µA
		V_{CC} = 3.3V ± 0.3V		-4	mA
		V_{CC} = 5V ± 0.5V		-8	mA
I_{OL}	Low-level output current	V_{CC} = 2V		50	µA
		V_{CC} = 3.3V ± 0.3V		4	mA
		V_{CC} = 5V ± 0.5V		8	mA
T_A	Operating free-air temperature		–40	125	°C

5.4 Thermal Information

PACKAGE	PINS	THERMAL METRIC[1]						UNIT
		$R_{\theta JA}$	$R_{\theta JC(top)}$	$R_{\theta JB}$	Ψ_{JT}	Ψ_{JB}	$R_{\theta JC(bot)}$	
DGS (VSSOP)	20	131.6	69.5	86.7	10.9	85.9	N/A	°C/W
PW (TSSOP)	20	116.8	58.5	78.7	12.6	77.9	N/A	°C/W

Copyright © 2025 Texas Instruments Incorporated

PACKAGE	PINS	THERMAL METRIC[1]						UNIT
		$R_{\theta JA}$	$R_{\theta JC(top)}$	$R_{\theta JB}$	Ψ_{JT}	Ψ_{JB}	$R_{\theta JC(bot)}$	
RKS (VQFN)	20	90.4	92.2	63.4	29	63.5	41.3	°C/W

(1) For more information about traditional and new thermal metrics, see the *Semiconductor and IC Package Thermal Metrics* application note.

5.5 Electrical Characteristics

over operating free-air temperature range (unless otherwise noted)

PARAMETER	TEST CONDITIONS	V_{CC}	-40°C to 125°C			UNIT
			MIN	TYP[1]	MAX	
V_{T+}		3.3V		1.9	2.31	V
		5V		3.3	3.5	V
V_{T-}		3.3V	0.99	1.4		V
		5V	1.5	2.6		V
ΔV_T		3.3V	0.33	0.5	1.32	V
		5V	0.5	0.8	2	V
V_{OH}	I_{OH} = –50µA	2V to 5.5V	V_{CC}-0.1	V_{CC} - 0.01		V
	I_{OH} = −4mA	3V	2.48	2.9		
	I_{OH} = −8mA	4.5V	3.8	4.3		
V_{OL}	I_{OL} = 50µA	2V to 5.5V		0.01	0.1	V
	I_{OL} = 4mA	3V		0.1	0.44	
	I_{OL} = 8mA	4.5V		0.2	0.44	
I_I	V_I = 5.5V or GND and V_{CC} = 0V to 5.5V	0V to 5.5V		±0.001	±1	µA
I_{OZ}	V_O = V_{CC} or GND and V_{CC} = 5.5V	5.5V		0.2	±5	µA
I_{CC}	V_I = V_{CC} or GND, I_O = 0, and V_{CC} = 5.5V	5.5V		0.3	40	µA
C_I	V_I = V_{CC} or GND	5V		2	10	pF
C_O	Vo = V_{CC} or GND	5V		5		pF
C_{PD} [2] [3]	No load, F = 1MHz	5V		41		pF

(1) Typical value measured at T_A = 25°C
(2) C_{PD} is used to determine the dynamic power consumption, per channel.
(3) $P_D = V_{CC}{}^2 x F_I x (C_{PD} + C_L)$ where F_I= input frequency, C_L= output load capacitance, V_{CC}= supply voltage.

5.6 Switching Characteristics

C_L = 50pF; over operating free-air temperature range; typical values measured at T_A = 25°C (unless otherwise noted). See *Parameter Measurement Information*

PARAMETER	FROM (INPUT)	TO (OUTPUT)	LOAD CAPACITANCE	V_{CC}	-40°C to 125°C			UNIT
					MIN	TYP	MAX	
t_{PLH}	A	Y	C_L = 15pF	2V	5.8	10	16.4	ns
t_{PHL}				2V	5.8	9.9	17.5	ns
t_{PLH}	B	Y	C_L = 15pF	2V	5.7	9.7	16.4	ns
t_{PHL}				2V	5.7	9.7	17.5	ns
t_{PLH}	C	Y	C_L = 15pF	2V	5.7	10.6	15.7	ns
t_{PHL}				2V	5.7	9.5	18.1	ns
t_{PLH}	D	Y	C_L = 15pF	2V	5.3	9.3	14.5	ns
t_{PHL}				2V	5.3	8.7	15.9	ns
t_{PLZ}	$\overline{OE}$	Y	C_L = 15pF	2V		8.4		ns
t_{PHL}				2V		8.3		ns

Copyright © 2025 Texas Instruments Incorporated

C_L = 50pF; over operating free-air temperature range; typical values measured at T_A = 25°C (unless otherwise noted). See *Parameter Measurement Information*

PARAMETER	FROM (INPUT)	TO (OUTPUT)	LOAD CAPACITANCE	V_{CC}	-40°C to 125°C			UNIT
					MIN	TYP	MAX	
t_{PLH}	A	Y	C_L = 15pF	3.3V	4.3	6	10	ns
t_{PHL}				3.3V	3.9	5.4	10.4	ns
t_{PLH}	B	Y	C_L = 15pF	3.3V	4.3	5.9	10.1	ns
t_{PHL}				3.3V	3.9	5.4	10.4	ns
t_{PLH}	C	Y	C_L = 15pF	3.3V	4.2	6.3	9.8	ns
t_{PHL}				3.3V	3.8	5.4	10.9	ns
t_{PLH}	D	Y	C_L = 15pF	3.3V	4	5.5	9.3	ns
t_{PHL}				3.3V	3.6	4.9	9.7	ns
t_{PLH}	$\overline{OE}$	Y	C_L = 15pF	3.3V		6.1		ns
t_{PHL}				3.3V		4.8		ns
t_{PLH}	A	Y	C_L = 15pF	5V	3.6	5	7.6	ns
t_{PHL}				5V	3	4.1	7.4	ns
t_{PLH}	B	Y	C_L = 15pF	5V	3.6	4.8	7.5	ns
t_{PHL}				5V	3	4.2	7.4	ns
t_{PLH}	C	Y	C_L = 15pF	5V	3.5	5.1	7.6	ns
t_{PHL}				5V	3	4	7.7	ns
t_{PLH}	D	Y	C_L = 15pF	5V	3.4	4.6	7.1	ns
t_{PHL}				5V	2.8	3.8	7	ns
t_{PLZ}	$\overline{OE}$	Y	C_L = 15pF	5V		5.3		ns
t_{PZL}				5V		3.6		ns
t_{PLH}	A	Y	C_L = 50pF	2V	7.3	12.1	20.6	ns
t_{PHL}				2V	7.3	11.5	21.3	ns
t_{PLH}	B	Y	C_L = 50pF	2V	7.3	11.8	20.6	ns
t_{PHL}				2V	7.2	11.3	21.4	ns
t_{PLH}	C	Y	C_L = 50pF	2V	7.2	12.5	19.8	ns
t_{PHL}				2V	7.1	11.2	21.8	ns
t_{PLH}	D	Y	C_L = 50pF	2V	6.9	11.4	18.6	ns
t_{PHL}				2V	6.8	10.4	19.6	ns
t_{PLZ}	$\overline{OE}$	Y	C_L = 50pF	2V		11.4		ns
t_{PZL}				2V		9.8		ns
t_{PLH}	A	Y	C_L = 50pF	3.3V	5.4	7.3	12.8	ns
t_{PHL}				3.3V	5	6.6	13	ns
t_{PLH}	B	Y	C_L = 50pF	3.3V	5.3	7.2	12.8	ns
t_{PHL}				3.3V	5	6.6	13	ns
t_{PLH}	C	Y	C_L = 50pF	3.3V	5.2	7.5	12.6	ns
t_{PHL}				3.3V	5	6.4	13.5	ns
t_{PLH}	D	Y	C_L = 50pF	3.3V	4.9	6.8	12.1	ns
t_{PHL}				3.3V	4.8	6	12.3	ns
t_{PLZ}	$\overline{OE}$	Y	C_L = 50pF	3.3V		8.1		ns
t_{PZL}				3.3V		5.8		ns
t_{PLH}	A	Y	C_L = 50pF	5V	4.4	5.9	9.5	ns
t_{PHL}				5V	4	5.1	9.5	ns

Copyright © 2025 Texas Instruments Incorporated

C_L = 50pF; over operating free-air temperature range; typical values measured at T_A = 25°C (unless otherwise noted). See *Parameter Measurement Information*

PARAMETER	FROM (INPUT)	TO (OUTPUT)	LOAD CAPACITANCE	V_{CC}	-40°C to 125°C			UNIT
					MIN	TYP	MAX	
t_{PLH}	B	Y	C_L = 50pF	5V	4.4	5.8	9.5	ns
t_{PHL}				5V	4	5.1	9.5	ns
t_{PLH}	C	Y	C_L = 50pF	5V	4.4	6	9.6	ns
t_{PHL}				5V	3.9	5	9.7	ns
t_{PLH}	D	Y	C_L = 50pF	5V	4.2	5.5	9.1	ns
t_{PHL}				5V	3.8	4.7	9	ns
t_{PLZ}	$\overline{OE}$	Y	C_L = 50pF	5V		6.4		ns
t_{PZL}				5V		4.6		ns

5.7 Noise Characteristics

V_{CC} = 5V, C_L = 50pF, T_A = 25°C

PARAMETER	DESCRIPTION	MIN	TYP	MAX	UNIT
$V_{OL(P)}$	Quiet output, maximum dynamic V_{OL}		0.8		V
$V_{OL(V)}$	Quiet output, minimum dynamic V_{OL}		-0.2		V
$V_{OH(V)}$	Quiet output, minimum dynamic V_{OH}		3.8		V
$V_{IH(D)}$	High-level dynamic input voltage	3.5			V
$V_{IL(D)}$	Low-level dynamic input voltage			1.5	V

5.8 Typical Characteristics

T_A = 25°C (unless otherwise noted)

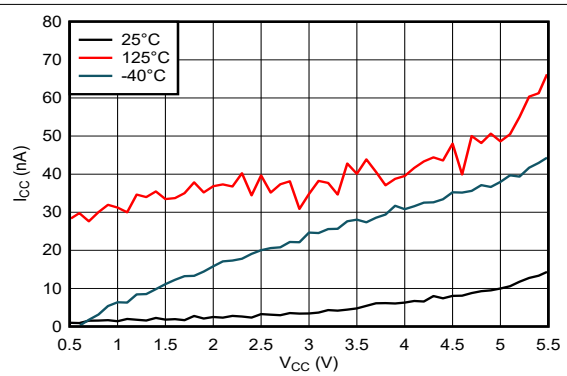

Figure 5-1. Supply Current Across Supply Voltage

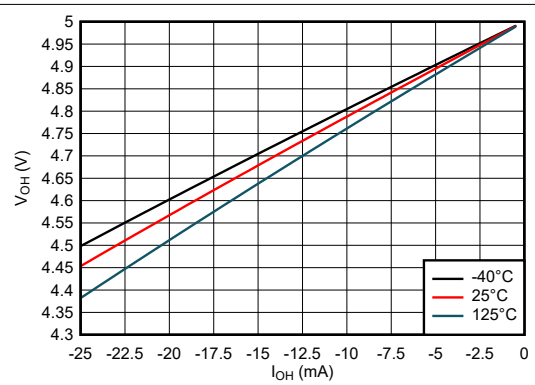

Figure 5-2. Output Voltage vs Current in HIGH State; 5V Supply

5.8 Typical Characteristics (continued)

T_A = 25°C (unless otherwise noted)

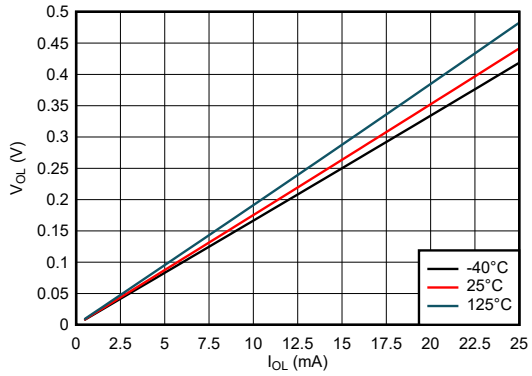

Figure 5-3. Output Voltage vs Current in LOW State; 5V Supply

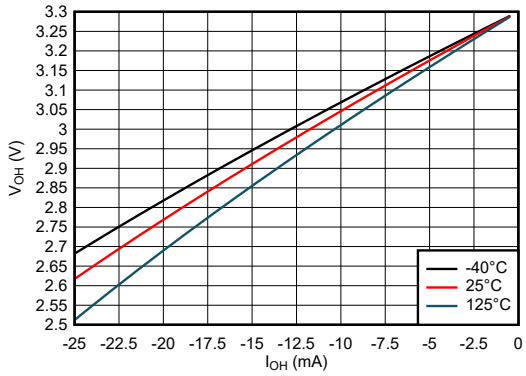

Figure 5-4. Output Voltage vs Current in HIGH State; 3.3V Supply

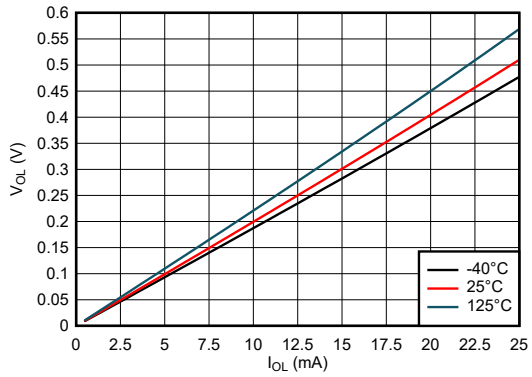

Figure 5-5. Output Voltage vs Current in LOW State; 3.3V Supply

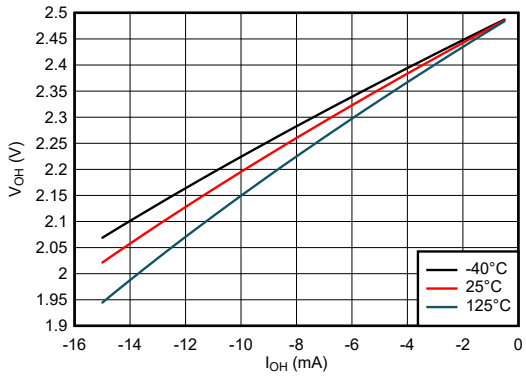

Figure 5-6. Output Voltage vs Current in HIGH State; 2.5V Supply

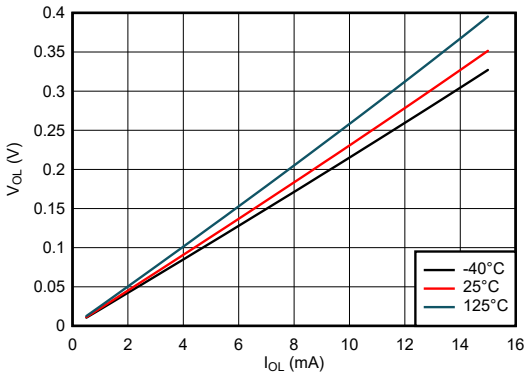

Figure 5-7. Output Voltage vs Current in LOW State; 2.5V Supply

Copyright © 2025 Texas Instruments Incorporated

6 Parameter Measurement Information

Phase relationships between waveforms were chosen arbitrarily for the examples listed in the following table. All input pulses are supplied by generators having the following characteristics: PRR ≤ 1MHz, Z_O = 50Ω, t_t < 2.5ns.

The outputs are measured individually with one input transition per measurement.

TEST	S1	S2	R_L	C_L	ΔV	V_{CC}
t_{PLH}, t_{PHL}	OPEN	OPEN	—	15pF, 50pF	—	ALL
t_{PLZ}, t_{PZL}	CLOSED	OPEN	1kΩ	15pF, 50pF	0.15V	≤ 2.5V
t_{PHZ}, t_{PZH}	OPEN	CLOSED	1kΩ	15pF, 50pF	0.15V	≤ 2.5V
t_{PLZ}, t_{PZL}	CLOSED	OPEN	1kΩ	15pF, 50pF	0.3V	> 2.5V
t_{PHZ}, t_{PZH}	OPEN	CLOSED	1kΩ	15pF, 50pF	0.3V	> 2.5V

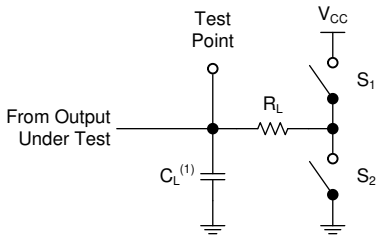

(1) C_L includes probe and test-fixture capacitance.

Figure 6-1. Load Circuit for 3-State Outputs

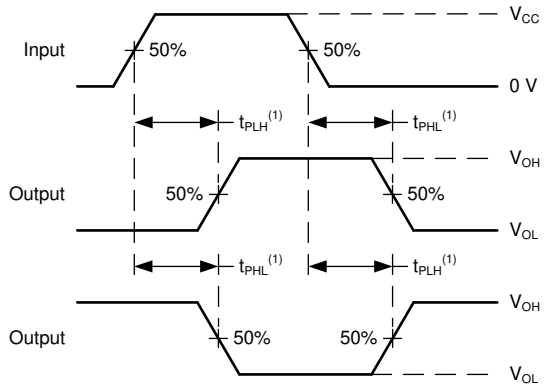

(1) The greater between t_{PLH} and t_{PHL} is the same as t_{pd}.

Figure 6-2. Voltage Waveforms Propagation Delays

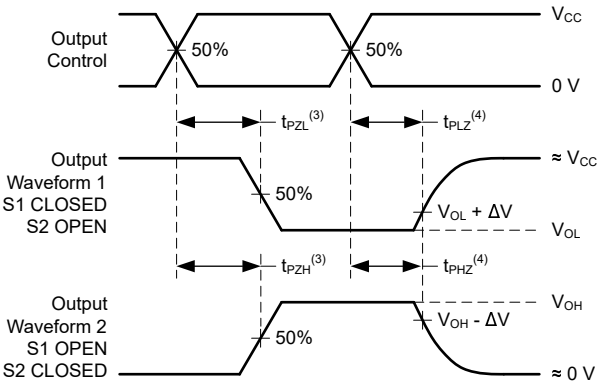

(3) The greater between t_{PZL} and t_{PZH} is the same as t_{en}.

(4) The greater between t_{PLZ} and t_{PHZ} is the same as t_{dis}.

Figure 6-3. Voltage Waveforms Propagation Delays

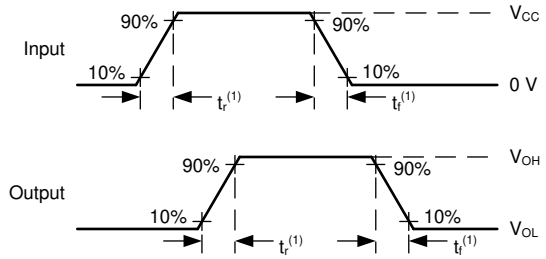

(1) The greater between t_r and t_f is the same as t_t.

Figure 6-4. Voltage Waveforms, Input and Output Transition Times

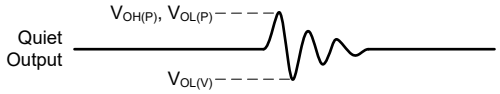

Noise values measured with all other outputs simultaneously switching.

Figure 6-5. Voltage Waveforms, Noise

7 Detailed Description

7.1 Overview

The SN74AHC3G99-Q1 device contains three independent ultra-configurable gates with 3-state outputs. Each gate has an independent active-low output enable ($\overline{OE}$). Each channel of the device performs the boolean function Y = (A•$\overline{C}$+B•C)⊕D. The user can choose logic functions, such as MUX, AND, OR, NAND, NOR, XOR, XNOR, inverter, and buffer by connecting the inputs A, B, C, and D appropriately.

7.2 Functional Block Diagram

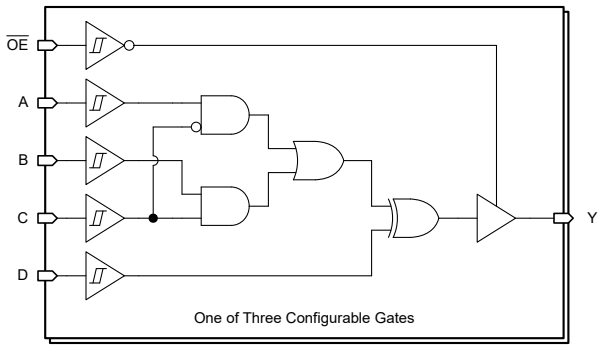

7.3 Combinatorial Logic Configurations

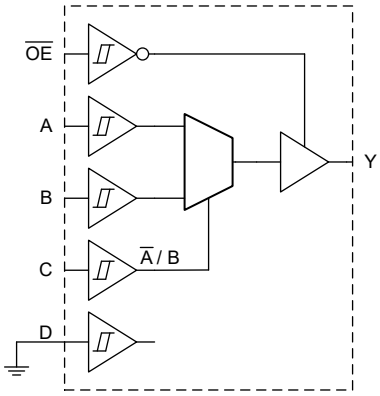

2-to-1 data selector

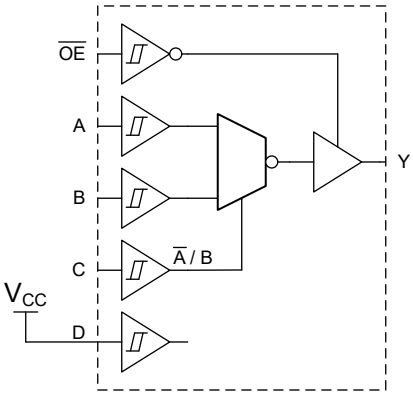

2-to-1 data selector with inverted output

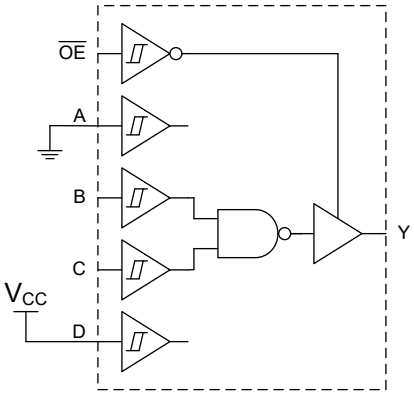

2-Input NAND

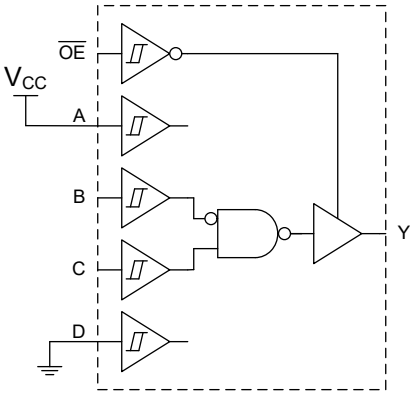

2-Input NAND with 1 inverted input

Copyright © 2025 Texas Instruments Incorporated

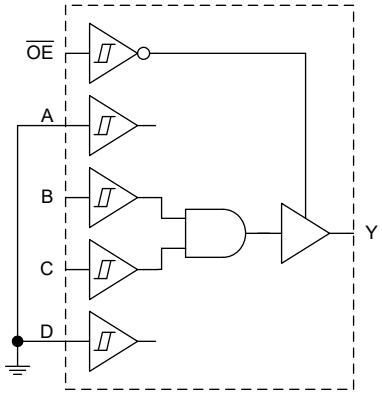

2-Input AND

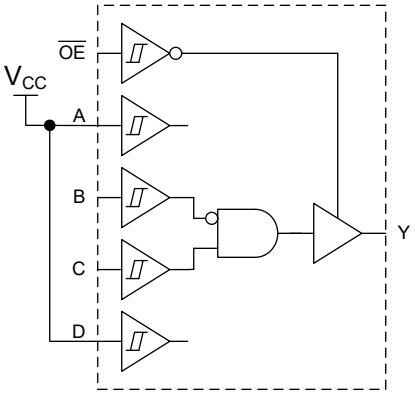

2-Input AND with 1 inverted input

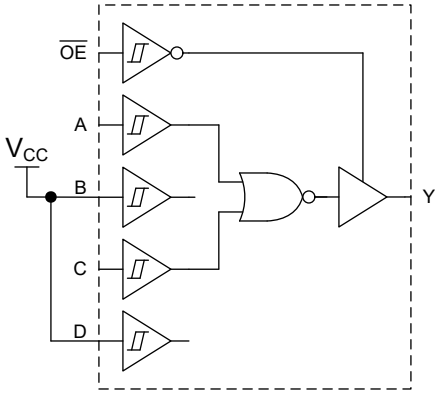

2-Input NOR

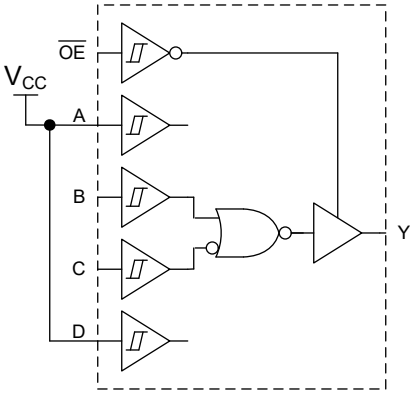

2-Input NOR with 1 inverted input

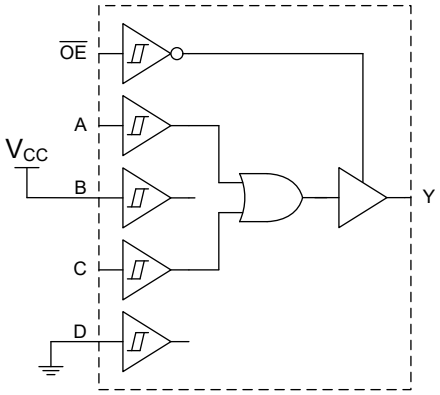

2-Input OR

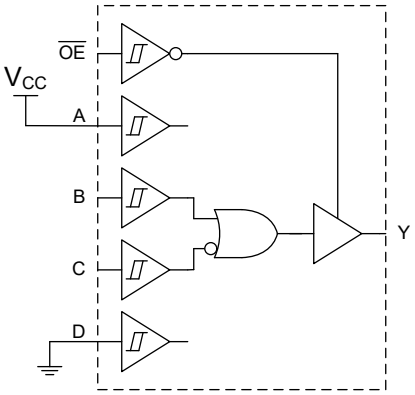

2-Input OR with 1 inverted input

Copyright © 2025 Texas Instruments Incorporated

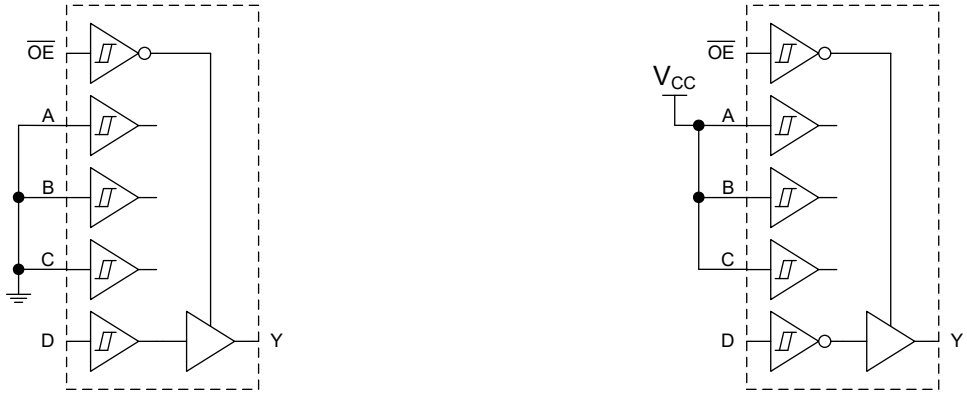

Schmitt-trigger buffer **Schmitt-trigger inverter**

Figure 7-1. Logic Configurations

Copyright © 2025 Texas Instruments Incorporated

7.4 Feature Description

7.4.1 Balanced CMOS 3-State Outputs

This device includes balanced CMOS 3-state outputs. Driving high, driving low, and high impedance are the three states that these outputs can be in. The term *balanced* indicates that the device can sink and source similar currents. The drive capability of this device may create fast edges into light loads, so routing and load conditions should be considered to prevent ringing. Additionally, the outputs of this device can drive larger currents than the device can sustain without being damaged. It is important for the output power of the device to be limited to avoid damage due to overcurrent. The electrical and thermal limits defined in the *Absolute Maximum Ratings* must be followed at all times.

When placed into the high-impedance state, the output will neither source nor sink current, with the exception of minor leakage current as defined in the *Electrical Characteristics* table. In the high-impedance state, the output voltage is not controlled by the device and is dependent on external factors. If no other drivers are connected to the node, then this is known as a floating node and the voltage is unknown. A pull-up or pull-down resistor can be connected to the output to provide a known voltage at the output while it is in the high-impedance state. The value of the resistor will depend on multiple factors, including parasitic capacitance and power consumption limitations. Typically, a 10kΩ resistor can be used to meet these requirements.

Unused 3-state CMOS outputs should be left disconnected.

7.4.2 CMOS Schmitt-Trigger Inputs

This device includes inputs with the Schmitt-trigger architecture. These inputs are high impedance and are typically modeled as a resistor in parallel with the input capacitance given in the *Electrical Characteristics* table from the input to ground. The worst case resistance is calculated with the maximum input voltage, given in the *Absolute Maximum Ratings* table, and the maximum input leakage current, given in the *Electrical Characteristics* table, using Ohm's law (R = V ÷ I).

The Schmitt-trigger input architecture provides hysteresis as defined by ΔV_T in the *Electrical Characteristics* table, which makes this device extremely tolerant to slow or noisy inputs. While the inputs can be driven much slower than standard CMOS inputs, it is still recommended to properly terminate unused inputs. Driving the inputs with slow transitioning signals will increase dynamic current consumption of the device. For additional information regarding Schmitt-trigger inputs, please see *Understanding Schmitt Triggers*.

7.4.3 Wettable Flanks

This device includes wettable flanks for at least one package. See the *Features* section on the front page of the data sheet where packages include this feature.

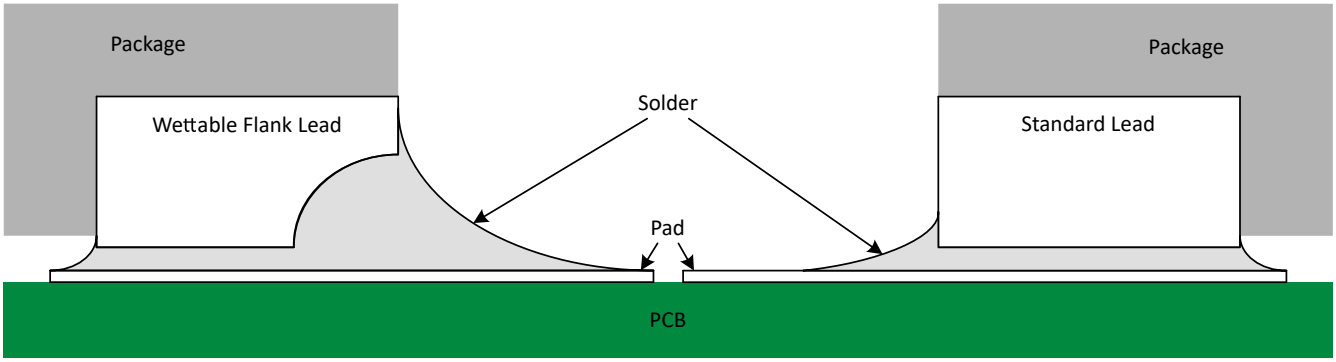

Figure 7-2. Simplified Cutaway View of Wettable-Flank QFN Package and Standard QFN Package After Soldering

Wettable flanks help improve side wetting after soldering, which makes QFN packages easier to inspect with automatic optical inspection (AOI). As shown in Figure 7-2, a wettable flank can be dimpled or step-cut to provide additional surface area for solder adhesion which assists in reliably creating a side fillet. See the mechanical drawing for additional details.

Copyright © 2025 Texas Instruments Incorporated

7.4.4 Clamp Diode Structure

As Figure 7-3 shows, the outputs to this device have both positive and negative clamping diodes, and the inputs to this device have negative clamping diodes only.

> **CAUTION**
> Voltages beyond the values specified in the *Absolute Maximum Ratings* table can cause damage to the device. The input and output voltage ratings may be exceeded if the input and output clamp-current ratings are observed.

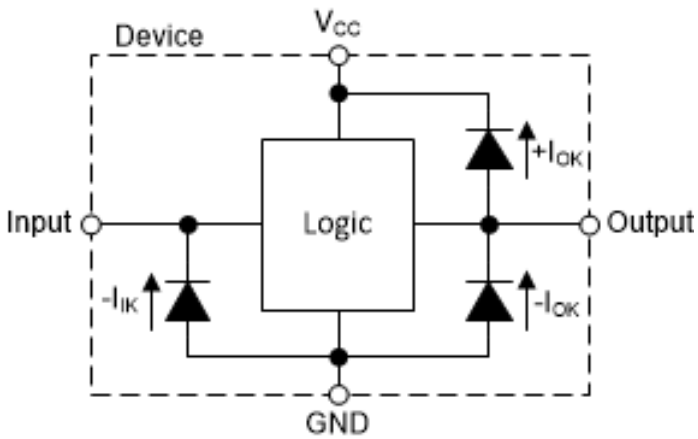

Figure 7-3. Electrical Placement of Clamping Diodes for Each Input and Output

7.5 Device Functional Modes

Table 7-1 lists the functional modes of the SN74AHC3G99-Q1.

Table 7-1. Function Table

INPUTS[1]					OUTPUTS[2]
$\overline{OE}$	D	C	B	A	Y
L	L	L	L	L	L
L	L	L	L	H	H
L	L	L	H	L	L
L	L	L	H	H	H
L	L	H	L	L	L
L	L	H	L	H	L
L	L	H	H	L	H
L	L	H	H	H	H
L	H	L	L	L	H
L	H	L	L	H	L
L	H	L	H	L	H
L	H	L	H	H	L
L	H	H	L	L	H
L	H	H	L	H	H
L	H	H	H	L	L
L	H	H	H	H	L

Table 7-1. Function Table (continued)

INPUTS[1]					OUTPUTS[2]
$\overline{OE}$	D	C	B	A	Y
H	X	X	X	X	Z

(1) H = High Voltage level, L = Low Voltage level, X = Don't care
(2) H = Driving high state, L = Driving low state, Z = High-impedance state

Copyright © 2025 Texas Instruments Incorporated

8 Application and Implementation

Note

Information in the following applications sections is not part of the TI component specification, and TI does not warrant its accuracy or completeness. TI's customers are responsible for determining suitability of components for their purposes, as well as validating and testing their design implementation to confirm system functionality.

8.1 Application Information

The SN74AHC3G99-Q1 device offers flexible configuration for many design applications. This example describes basic control of a device using the AND gate configuration. The SN74AHC3G99-Q1 is used to gate the signal from the MCU based on the status of the V_{CC} voltage.

8.2 Typical Application

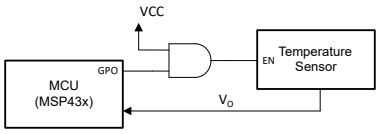

Figure 8-1. Typical Application Schematic

8.2.1 Design Requirements

8.2.1.1 Power Considerations

Ensure that the desired supply voltage is within the range specified in the *Electrical Characteristics*. The supply voltage sets the device electrical characteristics of the device, as described in the *Electrical Characteristics* section.

The positive voltage supply must be capable of sourcing current equal to the total current to be sourced by all outputs of the SN74AHC3G99-Q1 plus the maximum static supply current, I_{CC}, listed in the *Electrical Characteristics*, and any transient current required for switching. The logic device can only source as much current that is provided by the positive supply source. Ensure the maximum total current through V_{CC} listed in the *Absolute Maximum Ratings* is not exceeded.

The ground must be capable of sinking current equal to the total current to be sunk by all outputs of the SN74AHC3G99-Q1 plus the maximum supply current, I_{CC}, listed in the *Electrical Characteristics*, and any transient current required for switching. The logic device can only sink as much current that can be sunk into its ground connection. Ensure the maximum total current through GND listed in the *Absolute Maximum Ratings* is not exceeded.

The SN74AHC3G99-Q1 can drive a load with a total capacitance less than or equal to 50pF while still meeting all of the data sheet specifications. Larger capacitive loads can be applied; however, it is not recommended to exceed 50pF.

The SN74AHC3G99-Q1 can drive a load with total resistance described by $R_L \geq V_O / I_O$, with the output voltage and current defined in the *Electrical Characteristics* table with V_{OH} and V_{OL}. When outputting in the HIGH state, the output voltage in the equation is defined as the difference between the measured output voltage and the supply voltage at the V_{CC} pin.

Total power consumption can be calculated using the information provided in the *CMOS Power Consumption and Cpd Calculation* application note.

Thermal increase can be calculated using the information provided in the *Thermal Characteristics of Standard Linear and Logic (SLL) Packages and Devices* application note.

CAUTION

The maximum junction temperature, $T_{J(max)}$ listed in the *Absolute Maximum Ratings*, is an additional limitation to prevent damage to the device. Do not violate any values listed in the *Absolute Maximum Ratings*. These limits are provided to prevent damage to the device.

8.2.1.2 Input Considerations

Input signals must cross $V_{t-(min)}$ to be considered a logic LOW, and $V_{t+(max)}$ to be considered a logic HIGH. Do not exceed the maximum input voltage range found in the *Absolute Maximum Ratings*.

Unused inputs must be terminated to either V_{CC} or ground. The unused inputs can be directly terminated if the input is completely unused, or they can be connected with a pull-up or pull-down resistor if the input will be used sometimes, but not always. A pull-up resistor is used for a default state of HIGH, and a pull-down resistor is used for a default state of LOW. The drive current of the controller, leakage current into the SN74AHC3G99-Q1 (as specified in the *Electrical Characteristics*), and the desired input transition rate limits the resistor size. A 10kΩ resistor value is often used due to these factors.

The SN74AHC3G99-Q1 has no input signal transition rate requirements because it has Schmitt-Trigger inputs.

Another benefit to having Schmitt-Trigger inputs is the ability to reject noise. Noise with a large enough amplitude can still cause issues. To know how much noise is too much, please refer to the $\Delta V_{T(min)}$ in the Electrical Characteristics . This hysteresis value will provide the peak-to-peak limit.

Unlike what happens with standard CMOS inputs, Schmitt-Trigger inputs can be held at any valid value without causing huge increases in power consumption. The typical additional current caused by holding an input at a value other than V_{CC} or ground is plotted in the Typical Characteristics .

Copyright © 2025 Texas Instruments Incorporated

Refer to the *Feature Description* for additional information regarding the inputs for this device.

8.2.1.3 Output Considerations

The positive supply voltage is used to produce the output HIGH voltage. Drawing current from the output will decrease the output voltage as specified by the V_{OH} specification in the *Electrical Characteristics*. The ground voltage is used to produce the output LOW voltage. Sinking current into the output will increase the output voltage as specified by the V_{OL} specification in the *Electrical Characteristics*.

Push-pull outputs that could be in opposite states, even for a very short time period, should never be connected directly together. This can cause excessive current and damage to the device.

Two channels within the same device with the same input signals can be connected in parallel for additional output drive strength.

Unused outputs can be left floating. Do not connect outputs directly to V_{CC} or ground.

Refer to the *Feature Description* section for additional information regarding the outputs for this device.

Copyright © 2025 Texas Instruments Incorporated

8.2.2 Detailed Design Procedure

1. Add a decoupling capacitor from V_{CC} to GND. The capacitor needs to be placed physically close to the device and electrically close to both the V_{CC} and GND pins. An example layout is shown in the *Layout* section.
2. Verify that the capacitive load at the output is ≤ 50pF. This is not a hard limit; by design, however, it will optimize performance. This can be accomplished by providing short, appropriately sized traces from the SN74AHC3G99-Q1 to one or more of the receiving devices.
3. Verify that the resistive load at the output is larger than (V_{CC} / $I_{O(max)}$)Ω. Doing this prevents the maximum output current from the *Absolute Maximum Ratings* from being violated. Most CMOS inputs have a resistive load measured in MΩ; much larger than the minimum calculated previously.
4. Thermal issues are rarely a concern for logic gates; the power consumption and thermal increase, however, can be calculated using the steps provided in the *CMOS Power Consumption and Cpd Calculation* application note.

8.2.3 Application Curves

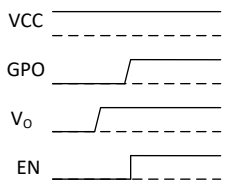

Figure 8-2. Typical Application Timing Diagram

Copyright © 2025 Texas Instruments Incorporated

8.3 Power Supply Recommendations

The power supply can be any voltage between the minimum and maximum supply voltage rating listed in the *Recommended Operating Conditions*.

Verify that each V_{CC} terminal has a good bypass capacitor to prevent power disturbance. For the SN74AHC3G99-Q1, a 0.1µF bypass capacitor is recommended. To reject different frequencies of noise, use multiple bypass capacitors in parallel. Capacitors with values of 0.1µF and 1µF are commonly used in parallel.

8.4 Layout

8.4.1 Layout Guidelines

- Bypass capacitor placement
  - Place near the positive supply terminal of the device
  - Provide an electrically short ground return path
  - Use wide traces to minimize impedance
  - Keep the device, capacitors, and traces on the same side of the board whenever possible
- Signal trace geometry
  - 8mil to 12mil trace width
  - Lengths less than 12cm to minimize transmission line effects
  - Avoid 90° corners for signal traces
  - Use an unbroken ground plane below signal traces
  - Flood fill areas around signal traces with ground
  - Parallel traces must be separated by at least 3x dielectric thickness
  - For traces longer than 12cm
    - Use impedance controlled traces
    - Source-terminate using a series damping resistor near the output
    - Avoid branches; buffer each signal that must branch separately

8.4.2 Layout Example

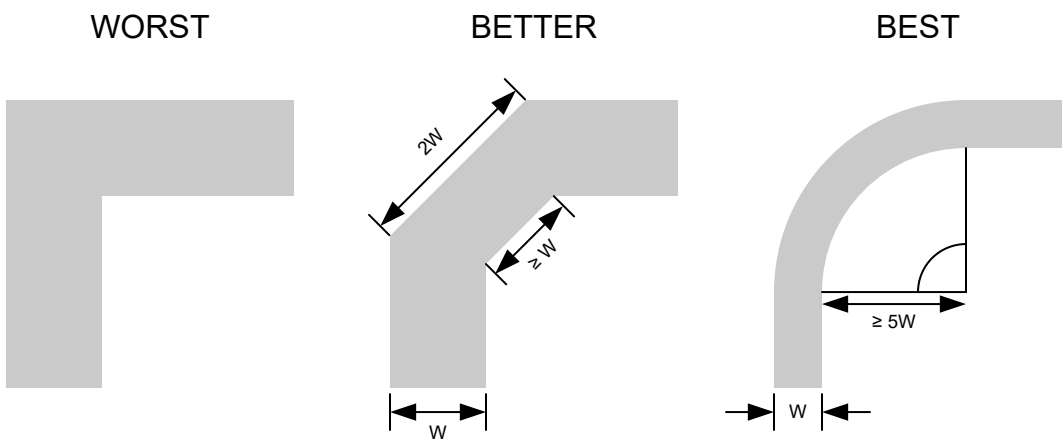

Figure 8-3. Example Trace Corners for Improved Signal Integrity

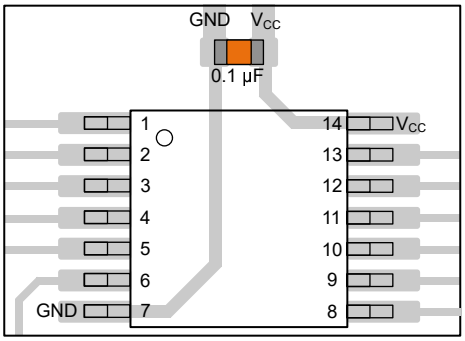

Figure 8-4. Example Bypass Capacitor Placement for TSSOP and Similar Packages

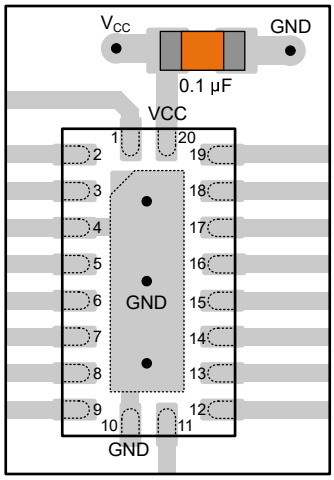

Figure 8-5. Example Bypass Capacitor Placement for WQFN and Similar Packages

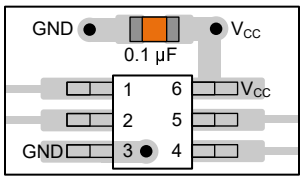

Figure 8-6. Example Bypass Capacitor Placement for SOT, SC70 and Similar Packages

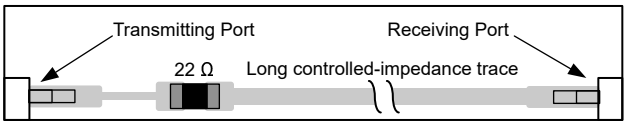

Figure 8-7. Example Damping Resistor Placement for Improved Signal Integrity

Copyright © 2025 Texas Instruments Incorporated

9 Device and Documentation Support

TI offers an extensive line of development tools. Tools and software to evaluate the performance of the device, generate code, and develop solutions are listed below.

9.1 Documentation Support

9.1.1 Related Documentation

For related documentation, see the following:

- Texas Instruments, *CMOS Power Consumption and C_{pd} Calculation* application note
- Texas Instruments, *Designing With Logic* application note
- Texas Instruments, *Thermal Characteristics of Standard Linear and Logic (SLL) Packages and Devices* application note

9.2 Receiving Notification of Documentation Updates

To receive notification of documentation updates, navigate to the device product folder on ti.com. Click on *Notifications* to register and receive a weekly digest of any product information that has changed. For change details, review the revision history included in any revised document.

9.3 Support Resources

TI E2E™ support forums are an engineer's go-to source for fast, verified answers and design help — straight from the experts. Search existing answers or ask your own question to get the quick design help you need.

Linked content is provided "AS IS" by the respective contributors. They do not constitute TI specifications and do not necessarily reflect TI's views; see TI's Terms of Use.

9.4 Trademarks

TI E2E™ is a trademark of Texas Instruments.
All trademarks are the property of their respective owners.

9.5 Electrostatic Discharge Caution

This integrated circuit can be damaged by ESD. Texas Instruments recommends that all integrated circuits be handled with appropriate precautions. Failure to observe proper handling and installation procedures can cause damage.

ESD damage can range from subtle performance degradation to complete device failure. Precision integrated circuits may be more susceptible to damage because very small parametric changes could cause the device not to meet its published specifications.

9.6 Glossary

TI Glossary — This glossary lists and explains terms, acronyms, and definitions.

10 Revision History

NOTE: Page numbers for previous revisions may differ from page numbers in the current version.

DATE	REVISION	NOTES
November 2025	*	Initial Release

11 Mechanical, Packaging, and Orderable Information

The following pages include mechanical, packaging, and orderable information. This information is the most current data available for the designated devices. This data is subject to change without notice and revision of this document. For browser-based versions of this data sheet, refer to the left-hand navigation.

Copyright © 2025 Texas Instruments Incorporated

PACKAGING INFORMATION

Orderable part number	Status (1)	Material type (2)	Package | Pins	Package qty | Carrier	RoHS (3)	Lead finish/ Ball material (4)	MSL rating/ Peak reflow (5)	Op temp (°C)	Part marking (6)
CAHC3G99QWRKSRQ1	Active	Production	VQFN (RKS) | 20	3000 | LARGE T&R	Yes	NIPDAU	Level-1-260C-UNLIM	-40 to 125	AHC99Q
SN74AHC3G99QDGSRQ1	Active	Production	VSSOP (DGS) | 20	5000 | LARGE T&R	Yes	NIPDAU	Level-1-260C-UNLIM	-40 to 125	A3G99Q
SN74AHC3G99QPWRQ1	Active	Production	TSSOP (PW) | 20	3000 | LARGE T&R	Yes	NIPDAU	Level-1-260C-UNLIM	-40 to 125	AHC3G99Q

(1) **Status:** For more details on status, see our product life cycle.

(2) **Material type:** When designated, preproduction parts are prototypes/experimental devices, and are not yet approved or released for full production. Testing and final process, including without limitation quality assurance, reliability performance testing, and/or process qualification, may not yet be complete, and this item is subject to further changes or possible discontinuation. If available for ordering, purchases will be subject to an additional waiver at checkout, and are intended for early internal evaluation purposes only. These items are sold without warranties of any kind.

(3) **RoHS values:** Yes, No, RoHS Exempt. See the TI RoHS Statement for additional information and value definition.

(4) **Lead finish/Ball material:** Parts may have multiple material finish options. Finish options are separated by a vertical ruled line. Lead finish/Ball material values may wrap to two lines if the finish value exceeds the maximum column width.

(5) **MSL rating/Peak reflow:** The moisture sensitivity level ratings and peak solder (reflow) temperatures. In the event that a part has multiple moisture sensitivity ratings, only the lowest level per JEDEC standards is shown. Refer to the shipping label for the actual reflow temperature that will be used to mount the part to the printed circuit board.

(6) **Part marking:** There may be an additional marking, which relates to the logo, the lot trace code information, or the environmental category of the part.

Multiple part markings will be inside parentheses. Only one part marking contained in parentheses and separated by a "~" will appear on a part. If a line is indented then it is a continuation of the previous line and the two combined represent the entire part marking for that device.

Important Information and Disclaimer: The information provided on this page represents TI's knowledge and belief as of the date that it is provided. TI bases its knowledge and belief on information provided by third parties, and makes no representation or warranty as to the accuracy of such information. Efforts are underway to better integrate information from third parties. TI has taken and continues to take reasonable steps to provide representative and accurate information but may not have conducted destructive testing or chemical analysis on incoming materials and chemicals. TI and TI suppliers consider certain information to be proprietary, and thus CAS numbers and other limited information may not be available for release.

In no event shall TI's liability arising out of such information exceed the total purchase price of the TI part(s) at issue in this document sold by TI to Customer on an annual basis.

OTHER QUALIFIED VERSIONS OF SN74AHC3G99-Q1 :

- Catalog : SN74AHC3G99

NOTE: Qualified Version Definitions:

- Catalog - TI's standard catalog product

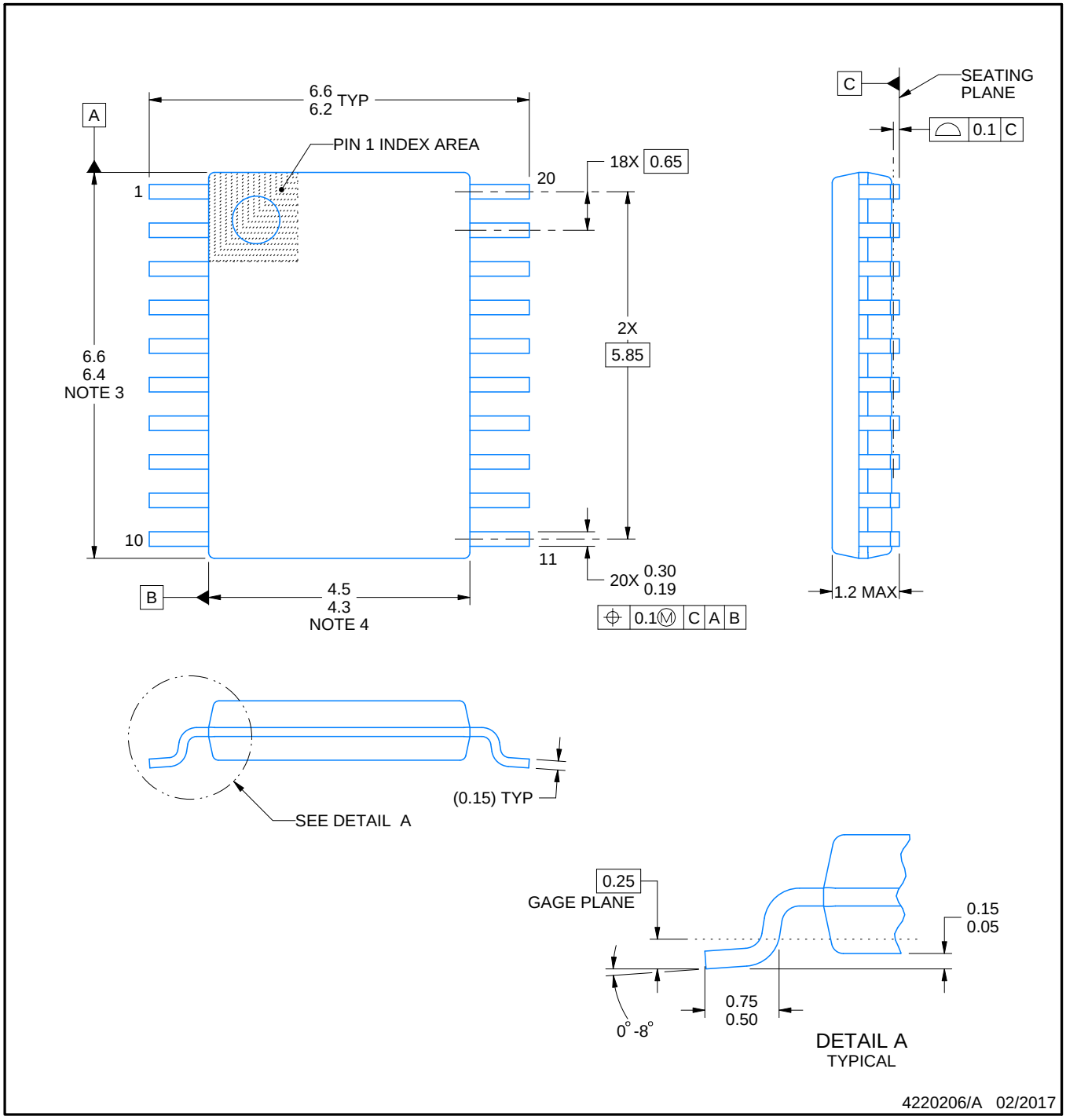

NOTES:

1. All linear dimensions are in millimeters. Any dimensions in parenthesis are for reference only. Dimensioning and tolerancing per ASME Y14.5M.
2. This drawing is subject to change without notice.
3. This dimension does not include mold flash, protrusions, or gate burrs. Mold flash, protrusions, or gate burrs shall not exceed 0.15 mm per side.
4. This dimension does not include interlead flash. Interlead flash shall not exceed 0.25 mm per side.
5. Reference JEDEC registration MO-153.

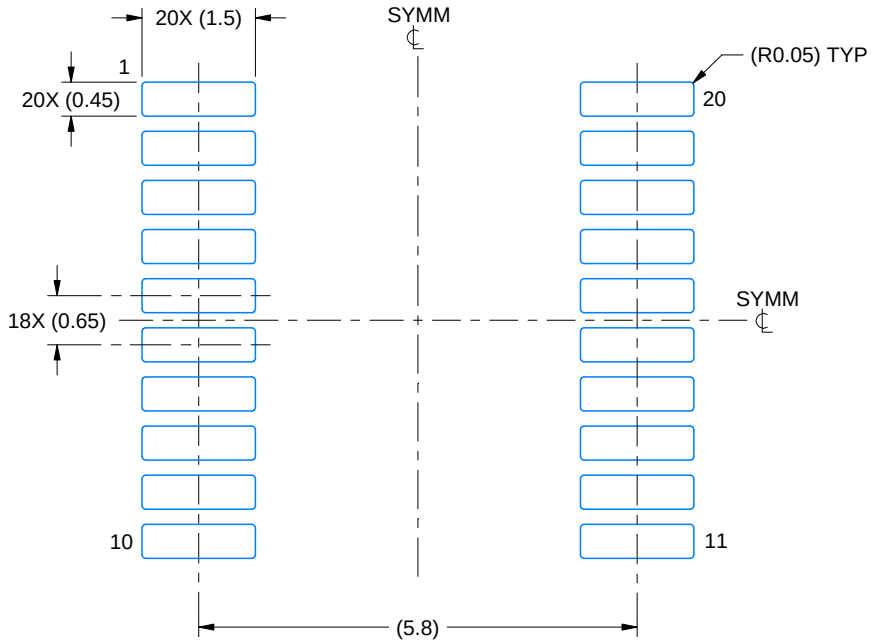

LAND PATTERN EXAMPLE
EXPOSED METAL SHOWN
SCALE: 10X

NON-SOLDER MASK DEFINED (PREFERRED)

SOLDER MASK DEFINED

SOLDER MASK DETAILS

4220206/A 02/2017

NOTES: (continued)

6. Publication IPC-7351 may have alternate designs.
7. Solder mask tolerances between and around signal pads can vary based on board fabrication site.

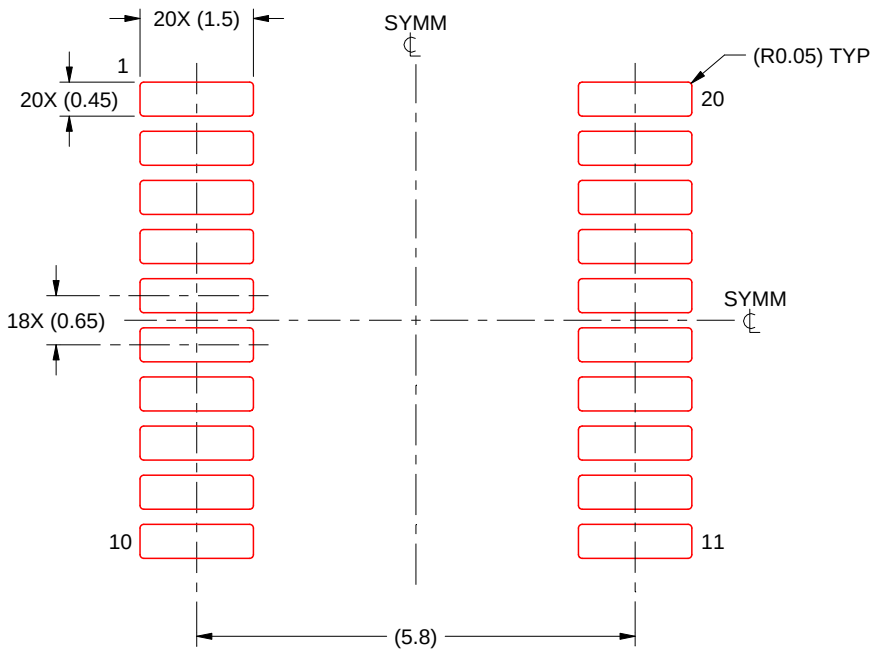

SOLDER PASTE EXAMPLE
BASED ON 0.125 mm THICK STENCIL
SCALE: 10X

4220206/A 02/2017

NOTES: (continued)

8. Laser cutting apertures with trapezoidal walls and rounded corners may offer better paste release. IPC-7525 may have alternate design recommendations.
9. Board assembly site may have different recommendations for stencil design.

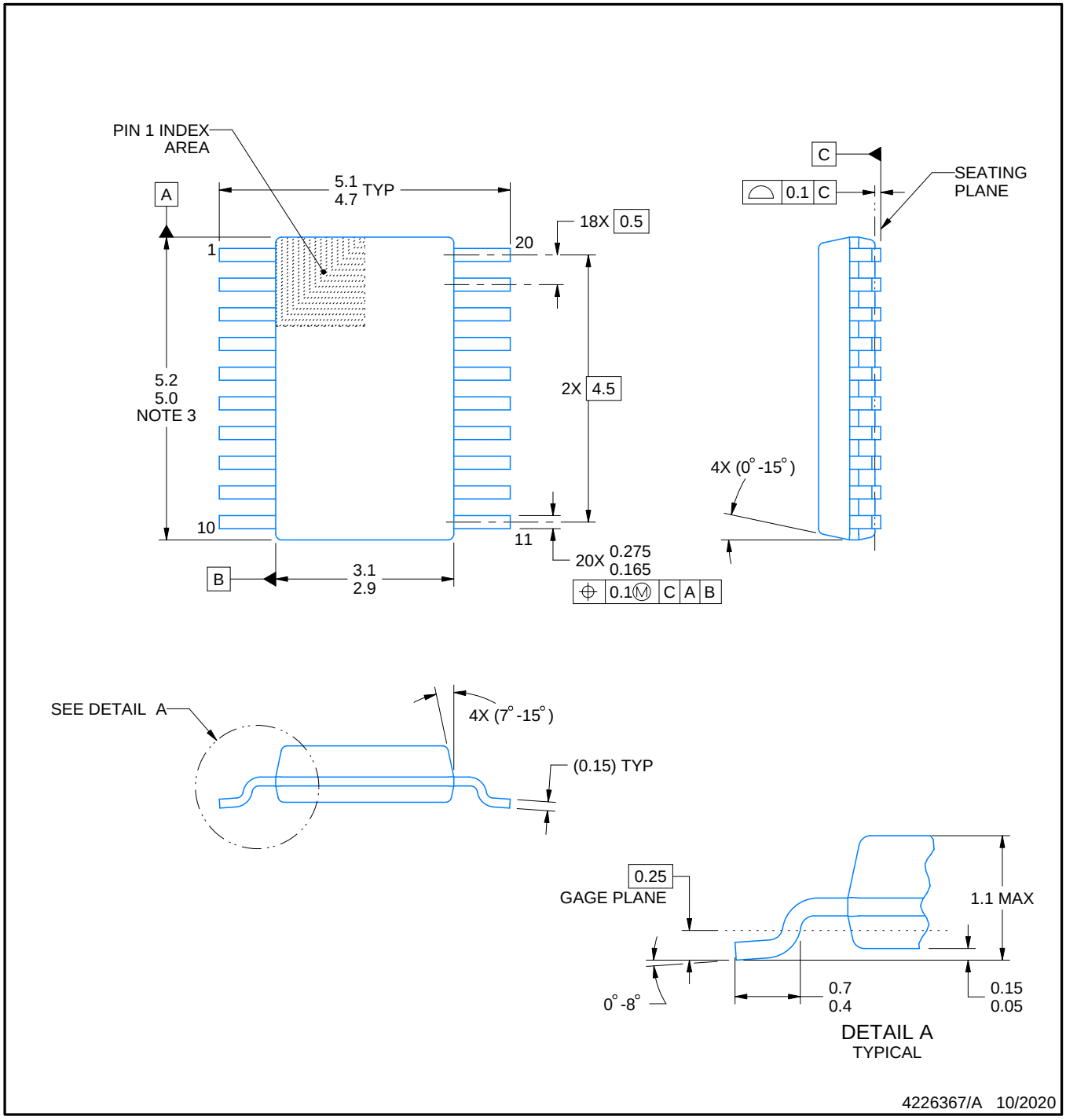

PowerPAD is a trademark of Texas Instruments.

NOTES:

1. All linear dimensions are in millimeters. Any dimensions in parenthesis are for reference only. Dimensioning and tolerancing per ASME Y14.5M.
2. This drawing is subject to change without notice.
3. This dimension does not include mold flash, protrusions, or gate burrs. Mold flash, protrusions, or gate burrs shall not exceed 0.15 mm per side.
4. No JEDEC registration as of September 2020.
5. Features may differ or may not be present.

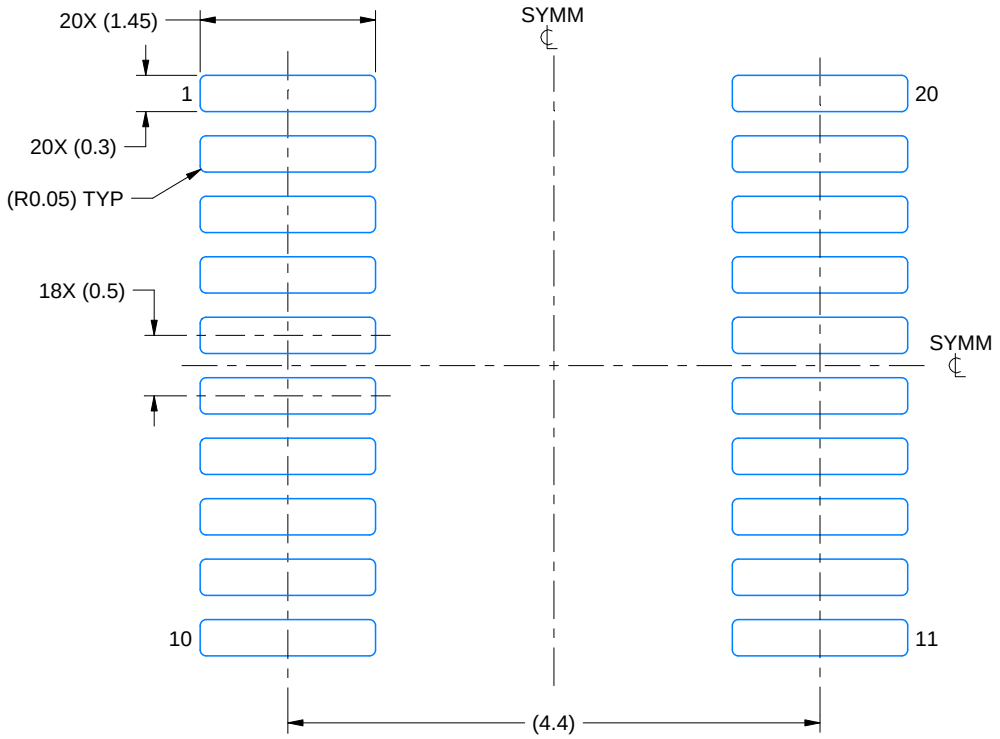

LAND PATTERN EXAMPLE
SCALE: 16X

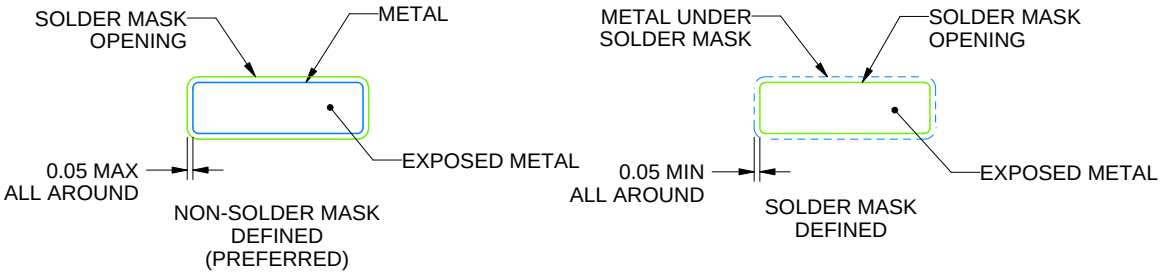

SOLDER MASK DETAILS

4226367/A 10/2020

NOTES: (continued)

6. Publication IPC-7351 may have alternate designs.
7. Solder mask tolerances between and around signal pads can vary based on board fabrication site.
8. This package is designed to be soldered to a thermal pad on the board. For more information, see Texas Instruments literature numbers SLMA002 (www.ti.com/lit/slma002) and SLMA004 (www.ti.com/lit/slma004).
9. Size of metal pad may vary due to creepage requirement.
10. Vias are optional depending on application, refer to device data sheet. It is recommended that vias under paste be filled, plugged or tented.

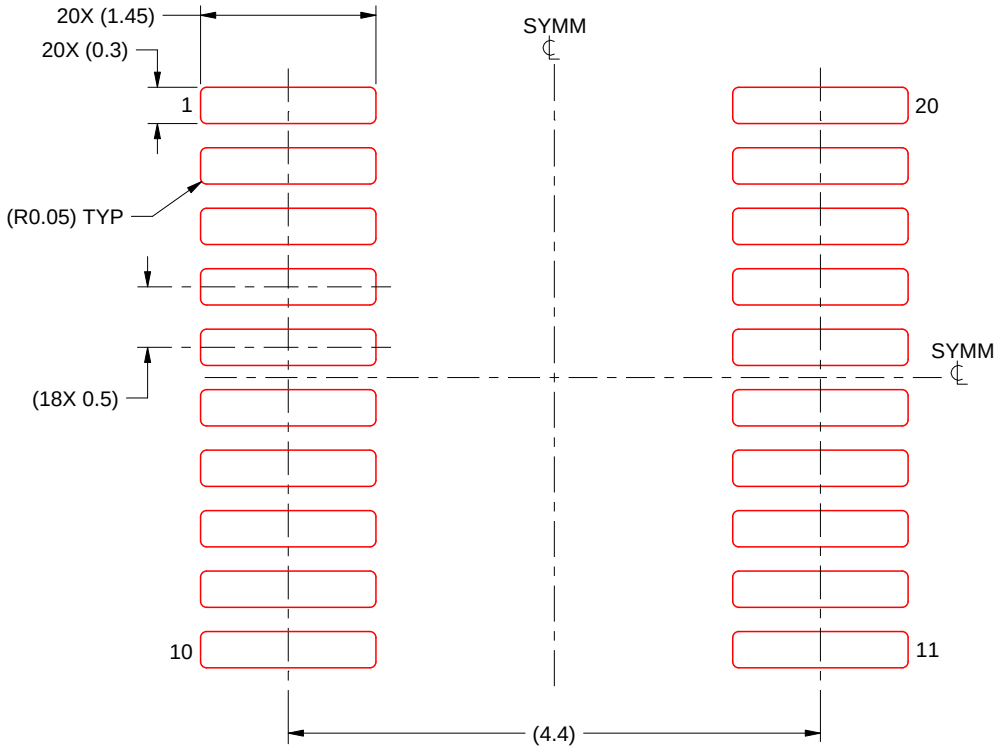

SOLDER PASTE EXAMPLE
BASED ON 0.125 mm THICK STENCIL
SCALE: 16X

4226367/A 10/2020

NOTES: (continued)

11. Laser cutting apertures with trapezoidal walls and rounded corners may offer better paste release. IPC-7525 may have alternate design recommendations.
12. Board assembly site may have different recommendations for stencil design.

GENERIC PACKAGE VIEW

RKS 20

VQFN - 1 mm max height

2.5 x 4.5, 0.5 mm pitch

PLASTIC QUAD FLATPACK - NO LEAD

This image is a representation of the package family, actual package may vary.
Refer to the product data sheet for package details.

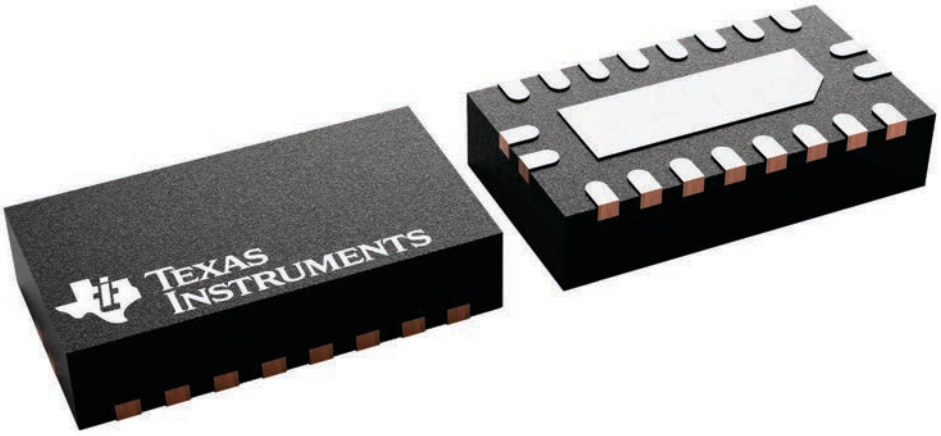

4226872/A

IMPORTANT NOTICE AND DISCLAIMER

TI PROVIDES TECHNICAL AND RELIABILITY DATA (INCLUDING DATASHEETS), DESIGN RESOURCES (INCLUDING REFERENCE DESIGNS), APPLICATION OR OTHER DESIGN ADVICE, WEB TOOLS, SAFETY INFORMATION, AND OTHER RESOURCES “AS IS” AND WITH ALL FAULTS, AND DISCLAIMS ALL WARRANTIES, EXPRESS AND IMPLIED, INCLUDING WITHOUT LIMITATION ANY IMPLIED WARRANTIES OF MERCHANTABILITY, FITNESS FOR A PARTICULAR PURPOSE OR NON-INFRINGEMENT OF THIRD PARTY INTELLECTUAL PROPERTY RIGHTS.

These resources are intended for skilled developers designing with TI products. You are solely responsible for (1) selecting the appropriate TI products for your application, (2) designing, validating and testing your application, and (3) ensuring your application meets applicable standards, and any other safety, security, regulatory or other requirements.

These resources are subject to change without notice. TI grants you permission to use these resources only for development of an application that uses the TI products described in the resource. Other reproduction and display of these resources is prohibited. No license is granted to any other TI intellectual property right or to any third party intellectual property right. TI disclaims responsibility for, and you fully indemnify TI and its representatives against any claims, damages, costs, losses, and liabilities arising out of your use of these resources.

TI’s products are provided subject to TI’s Terms of Sale, TI’s General Quality Guidelines, or other applicable terms available either on ti.com or provided in conjunction with such TI products. TI’s provision of these resources does not expand or otherwise alter TI’s applicable warranties or warranty disclaimers for TI products. Unless TI explicitly designates a product as custom or customer-specified, TI products are standard, catalog, general purpose devices.

TI objects to and rejects any additional or different terms you may propose.

Copyright © 2026, Texas Instruments Incorporated

Last updated 10/2025