SN74HCT244-Q1 Octal Buffer and Line Driver With 3-State Outputs

1 Features

- Qualified for automotive applications
- ESD protection exceeds 1000 V per MIL-STD-883, Method 3015; exceeds 200 V using machine model (C = 200 pF, R = 0)
- Operating voltage range of 4.5 V to 5.5 V
- High-current outputs drive up to 15 LSTTL loads
- Low power consumption, 80-µA max ICC
- Typical t_{pd} = 13 ns
- ±6-mA output drive at 5 V
- Low input current of 1 µA max
- Inputs are TTL-voltage compatible
- 3-state outputs drive bus lines or buffer memory address registers

2 Description

This octal buffer and line driver is designed specifically to improve both the performance and density of 3-state memory address drivers, clock drivers, and bus-oriented receivers and transmitters. The ’HCT244 device is organized as two 4-bit buffers/drivers with separate output-enable ($\overline{OE}$) inputs. When $\overline{OE}$ is low, the device passes noninverted data from the A inputs to the Y outputs. When $\overline{OE}$ is high, the outputs are in the high-impedance state.

Device Information

PART NUMBER	PACKAGE(1)	BODY SIZE (NOM)
SN74HCT244QPW-Q1	TSSOP (20)	6.50 mm × 4.40 mm

(1) For all available packages, see the orderable addendum at the end of the data sheet.

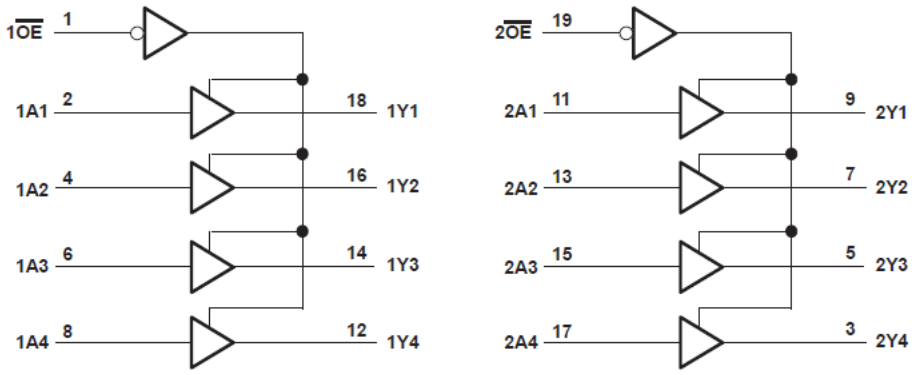

Functional Block Diagram

An IMPORTANT NOTICE at the end of this data sheet addresses availability, warranty, changes, use in safety-critical applications, intellectual property matters and other important disclaimers. PRODUCTION DATA.

Table of Contents

1 Features....1
2 Description....1
3 Revision History....2
4 Pin Configuration and Functions....3
5 Specifications....4
5.1 Absolute Maximum Ratings....4
5.2 Recommended Operating Conditions(1)....4
5.3 Thermal Information....4
5.4 Electrical Characteristics....5
5.5 Switching Characteristics....5
5.6 Switching Characteristics....5
5.7 Operating Characteristics....5
6 Parameter Measurement Information....6
7 Detailed Description....7
7.1 Overview....7
7.2 Functional Block Diagram....7
7.3 Device Functional Modes....7
8 Power Supply Recommendations....8
9 Layout....8
9.1 Layout Guidelines....8
10 Device and Documentation Support....9
10.1 Receiving Notification of Documentation Updates....9
10.2 Support Resources....9
10.3 Trademarks....9
10.4 Electrostatic Discharge Caution....9
10.5 Glossary....9
11 Mechanical, Packaging, and Orderable Information....9

3 Revision History

NOTE: Page numbers for previous revisions may differ from page numbers in the current version.

Changes from Revision B (February 2022) to Revision C (June 2022)	Page
• Junction-to-ambient thermal resistance values increased. PW was 83 is now 131.8	4

Changes from Revision A (February 2008) to Revision B (February 2022)	Page
• Updated the numbering, formatting, tables, figures, and cross-references throughout the doucment to reflect modern data sheet standards	1

Copyright © 2022 Texas Instruments Incorporated

4 Pin Configuration and Functions

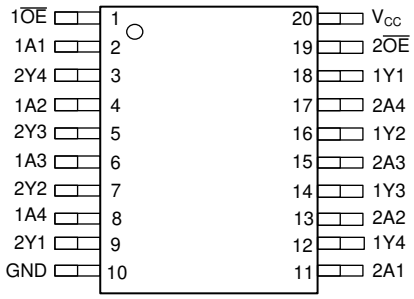

PW Package
20-Pin TSSOP
Top View

5 Specifications

5.1 Absolute Maximum Ratings

over operating free-air temperature range (unless otherwise noted)(1)

			MIN	MAX	UNIT
V_{CC}	Supply voltage range		–0.5	7	V
I_{IK}	Input clamp current(2)	$V_I < 0$ or $V_I > V_{CC}$		± 20	mA
I_{OK}	Output clamp current(2)	$V_O < 0$ or $V_O > V_{CC}$		± 20	mA
I_O	Continuous output current	V_O = 0 to V_{CC}		± 35	mA
	Continuous current through V_{CC} or GND			± 70	mA
T_J	Junction temperature			150	℃
T_{stg}	Storage temperature range		–65	150	℃

(1) Stresses beyond those listed under “absolute maximum ratings” may cause permanent damage to the device. These are stress ratings only, and functional operation of the device at these or any other conditions beyond those indicated under “recommended operating conditions" is not implied. Exposure to absolute-maximum-rated conditions for extended periods may affect device reliability.
(2) The input and output voltage ratings may be exceeded if the input and output current ratings are observed.

5.2 Recommended Operating Conditions(1)

			MIN	NOM	MAX	UNIT
V_{CC}	Supply voltage		4.5	5	5.5	V
V_{IH}	High-level input voltage	V_{CC} = 4.5 V to 5.5 V	2			V
V_{IL}	Low-level input voltage	V_{CC} = 4.5 V to 5.5 V			0.8	V
V_I	Input voltage		0		V_{CC}	V
V_O	Output voltage		0		V_{CC}	V
Δt/Δv	Input transition rise/fall time				500	ns
T_A	Operating free-air temperature		−40		125	°C

(1) All unused inputs of the device must be held at V_{CC} or GND to ensure proper device operation. Refer to the TI application report, *Implications of Slow or Floating CMOS Inputs*, literature number SCBA004.

5.3 Thermal Information

THERMAL METRIC		PW (TSSOP) 20 PINS	UNIT
$R_{\theta JA}$	Junction-to-ambient thermal resistance(1)	131.8	°C/W
$R_{\theta JC(top)}$	Junction-to-case (top) thermal resistance	72.2	°C/W
$R_{\theta JB}$	Junction-to-board thermal resistance	82.8	°C/W
ψ_{JT}	Junction-to-top characterization parameter	21.5	°C/W
ψ_{JB}	Junction-to-board characterization parameter	82.4	°C/W
$R_{\theta JC(bot)}$	Junction-to-case (bottom) thermal resistance	N/A	°C/W

(1) For more information about traditional and new thermal metrics, see the *Semiconductor and IC package thermal metrics* application report.

Copyright © 2022 Texas Instruments Incorporated

5.4 Electrical Characteristics

over recommended operating free-air temperature range (unless otherwise noted)

PARAMETER	TEST CONDITIONS		V_{CC}	T_A = 25°C			MIN	MAX	UNIT
				MIN	TYP	MAX			
V_{OH}	V_I = V_{IH} or V_{IL}	I_{OH} = −20 µA	4.5 V	4.4	4.499		4.4		V
		I_{OH} = −6 mA		3.98	4.3		3.7		
V_{OL}	V_I = V_{IH} or V_{IL}	I_{OL} = 20 µA	4.5 V		0.001	0.1		0.1	V
		I_{OL} = 6 mA			0.17	0.26		0.4	
I_I	V_I = V_{CC} or 0		5.5 V		±0.1	±100		±1000	nA
I_{OZ}	V_O = V_{CC} or 0,	V_I = V_{IH} or V_{IL}	5.5 V		±0.01	±0.5		±10	µA
I_{CC}	V_I = V_{CC} or 0,	I_O = 0	5.5 V			8		160	µA
ΔI_{CC} (1)	One input at 0.5 V or 2.4 V, Other inputs at 0 or V_{CC}		5.5 V		1.4	2.4		3	mA
C_i			4.5 V to 5.5 V		3	10		10	pF

(1) This is the increase in supply current for each input that is at one of the specified TTL voltage levels, rather than 0 V or V_{CC}.

5.5 Switching Characteristics

over recommended operating free-air temperature range, C_L = 50 pF (unless otherwise noted) (see Figure 6-1)

PARAMETER	FROM (INPUT)	TO (OUTPUT)	V_{CC}	T_A = 25°C			MIN	MAX	UNIT
				MIN	TYP	MAX			
t_{pd}	A	Y	4.5 V		15	28		42	ns
			5.5 V		13	25		38	
t_{en}	$\overline{OE}$	Y	4.5 V		21	35		53	ns
			5.5 V		19	32		48	
t_{dis}	$\overline{OE}$	Y	4.5 V		19	35		53	ns
			5.5 V		18	32		48	
t_t		Y	4.5 V		8	12		18	ns
			5.5 V		7	11		16	

5.6 Switching Characteristics

over recommended operating free-air temperature range, C_L = 150 pF (unless otherwise noted) (see Figure 6-1)

PARAMETER	FROM (INPUT)	TO (OUTPUT)	V_{CC}	T_A = 25°C			MIN	MAX	UNIT
				MIN	TYP	MAX			
t_{pd}	A	Y	4.5 V		21	45		68	ns
			5.5 V		18	40		61	
t_{en}	$\overline{OE}$	Y	4.5 V		25	52		79	ns
			5.5 V		22	47		71	
t_t		Y	4.5 V		17	42		63	ns
			5.5 V		14	38		57	

5.7 Operating Characteristics

T_A = 25°C

PARAMETER		TEST CONDITIONS	TYP	UNIT
C_{pd}	Power dissipation capacitance per buffer/driver	No load	40	pF

Copyright © 2022 Texas Instruments Incorporated

6 Parameter Measurement Information

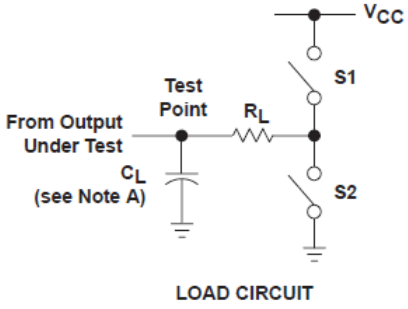

LOAD CIRCUIT

PARAMETER		R_L	C_L	S1	S2
t_{en}	t_{PZH}	1 kΩ	50 pF or 150 pF	Open	Closed
	t_{PZL}			Closed	Open
t_{dis}	t_{PHZ}	1 kΩ	50 pF	Open	Closed
	t_{PLZ}			Closed	Open
t_{pd} or t_t		—	50 pF or 150 pF	Open	Open

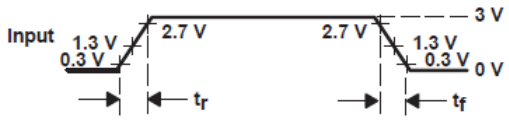

VOLTAGE WAVEFORM
INPUT RISE AND FALL TIMES

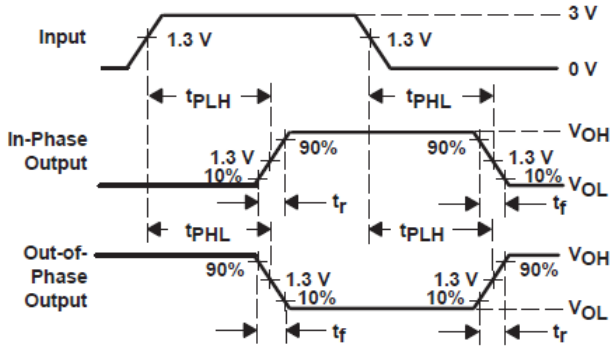

VOLTAGE WAVEFORMS
PROPAGATION DELAY AND OUTPUT RISE AND FALL TIMES

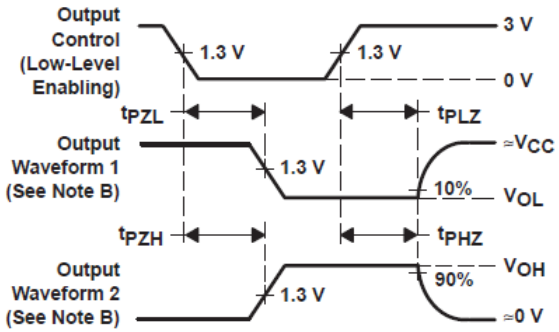

VOLTAGE WAVEFORMS
ENABLE AND DISABLE TIMES FOR 3-STATE OUTPUTS

A. C_L includes probe and test-fixture capacitance.
B. Waveform 1 is for an output with internal conditions such that the output is low except when disabled by the output control. Waveform 2 is for an output with internal conditions such that the output is high except when disabled by the output control.
C. Phase relationships between waveforms were chosen arbitrarily. All input pulses are supplied by generators having the following characteristics: PRR ≤ 1 MHz, Z_O = 50 Ω, t_r = 6 ns, t_f = 6 ns.
D. The outputs are measured one at a time with one input transition per measurement.
E. t_{PLZ} and t_{PHZ} are the same as t_{dis}.
F. t_{PZL} and t_{PZH} are the same as t_{en}.
G. t_{PLH} and t_{PHL} are the same as t_{pd}.

Figure 6-1. Load Circuit and Voltage Waveforms

Copyright © 2022 Texas Instruments Incorporated

7 Detailed Description

7.1 Overview

This octal buffer and line driver is designed specifically to improve both the performance and density of 3-state memory address drivers, clock drivers, and bus-oriented receivers and transmitters. The ’HCT244 device is organized as two 4-bit buffers/drivers with separate output-enable ($\overline{OE}$) inputs. When $\overline{OE}$ is low, the device passes noninverted data from the A inputs to the Y outputs. When $\overline{OE}$ is high, the outputs are in the high-impedance state.

7.2 Functional Block Diagram

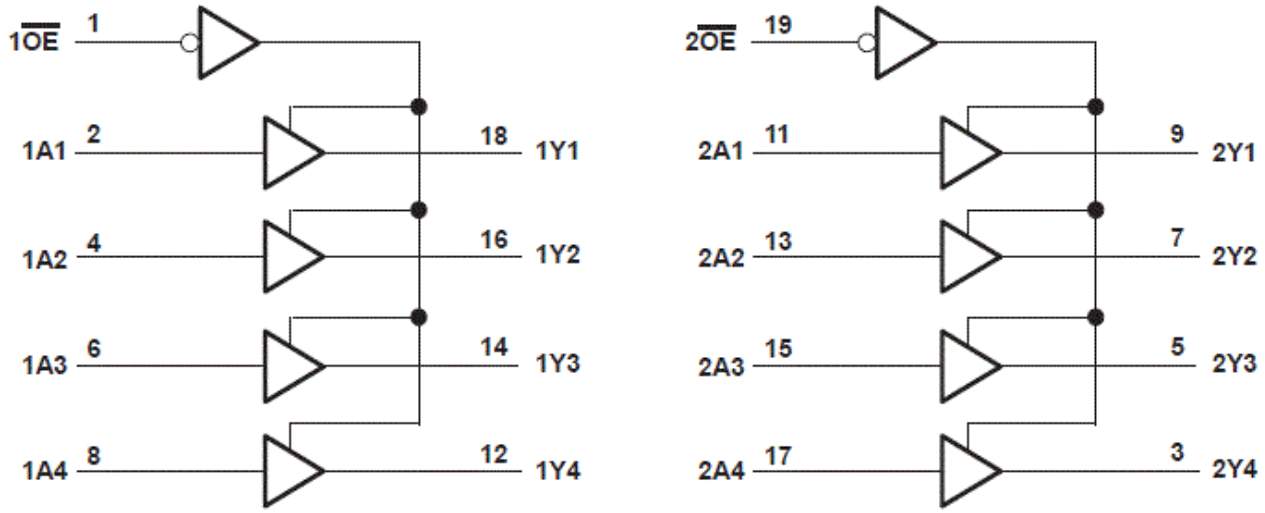

7.3 Device Functional Modes

Table 7-1. Function Table (Each Buffer/Driver)

INPUTS		OUTPUT Y
$\overline{OE}$	A	
L	H	H
L	L	L
H	X	Z

8 Power Supply Recommendations

The power supply can be any voltage between the minimum and maximum supply voltage rating located in the *Recommended Operating Conditions*. Each V_{CC} terminal should have a good bypass capacitor to prevent power disturbance. A 0.1-µF capacitor is recommended for this device. It is acceptable to parallel multiple bypass caps to reject different frequencies of noise. The 0.1-µF and 1-µF capacitors are commonly used in parallel. The bypass capacitor should be installed as close to the power terminal as possible for best results.

9 Layout

9.1 Layout Guidelines

When using multiple-input and multiple-channel logic devices inputs must not ever be left floating. In many cases, functions or parts of functions of digital logic devices are unused; for example, when only two inputs of a triple-input AND gate are used or only 3 of the 4 buffer gates are used. Such unused input pins must not be left unconnected because the undefined voltages at the outside connections result in undefined operational states. All unused inputs of digital logic devices must be connected to a logic high or logic low voltage, as defined by the input voltage specifications, to prevent them from floating. The logic level that must be applied to any particular unused input depends on the function of the device. Generally, the inputs are tied to GND or V_{CC}, whichever makes more sense for the logic function or is more convenient.

Copyright © 2022 Texas Instruments Incorporated

10 Device and Documentation Support

TI offers an extensive line of development tools. Tools and software to evaluate the performance of the device, generate code, and develop solutions are listed below.

10.1 Receiving Notification of Documentation Updates

To receive notification of documentation updates, navigate to the device product folder on ti.com. Click on *Subscribe to updates* to register and receive a weekly digest of any product information that has changed. For change details, review the revision history included in any revised document.

10.2 Support Resources

TI E2E™ support forums are an engineer's go-to source for fast, verified answers and design help — straight from the experts. Search existing answers or ask your own question to get the quick design help you need.

Linked content is provided "AS IS" by the respective contributors. They do not constitute TI specifications and do not necessarily reflect TI's views; see TI's Terms of Use.

10.3 Trademarks

TI E2E™ is a trademark of Texas Instruments.
All trademarks are the property of their respective owners.

10.4 Electrostatic Discharge Caution



This integrated circuit can be damaged by ESD. Texas Instruments recommends that all integrated circuits be handled with appropriate precautions. Failure to observe proper handling and installation procedures can cause damage.

ESD damage can range from subtle performance degradation to complete device failure. Precision integrated circuits may be more susceptible to damage because very small parametric changes could cause the device not to meet its published specifications.

10.5 Glossary

TI Glossary	This glossary lists and explains terms, acronyms, and definitions.

11 Mechanical, Packaging, and Orderable Information

The following pages include mechanical, packaging, and orderable information. This information is the most current data available for the designated devices. This data is subject to change without notice and revision of this document. For browser-based versions of this data sheet, refer to the left-hand navigation.

Copyright © 2022 Texas Instruments Incorporated

PACKAGING INFORMATION

Orderable part number	Status (1)	Material type (2)	Package | Pins	Package qty | Carrier	RoHS (3)	Lead finish/ Ball material (4)	MSL rating/ Peak reflow (5)	Op temp (°C)	Part marking (6)
SN74HCT244QPWRG4Q1	Active	Production	TSSOP (PW) | 20	2000 | LARGE T&R	Yes	NIPDAU	Level-1-260C-UNLIM	-40 to 125	HT244Q
SN74HCT244QPWRG4Q1.A	Active	Production	TSSOP (PW) | 20	2000 | LARGE T&R	Yes	NIPDAU	Level-1-260C-UNLIM	-40 to 125	HT244Q
SN74HCT244QPWRQ1	Active	Production	TSSOP (PW) | 20	2000 | LARGE T&R	Yes	NIPDAU	Level-3-260C-168 HR	-40 to 125	HT244Q
SN74HCT244QPWRQ1.A	Active	Production	TSSOP (PW) | 20	2000 | LARGE T&R	Yes	NIPDAU	Level-3-260C-168 HR	-40 to 125	HT244Q

(1) **Status:** For more details on status, see our product life cycle.

(2) **Material type:** When designated, preproduction parts are prototypes/experimental devices, and are not yet approved or released for full production. Testing and final process, including without limitation quality assurance, reliability performance testing, and/or process qualification, may not yet be complete, and this item is subject to further changes or possible discontinuation. If available for ordering, purchases will be subject to an additional waiver at checkout, and are intended for early internal evaluation purposes only. These items are sold without warranties of any kind.

(3) **RoHS values:** Yes, No, RoHS Exempt. See the TI RoHS Statement for additional information and value definition.

(4) **Lead finish/Ball material:** Parts may have multiple material finish options. Finish options are separated by a vertical ruled line. Lead finish/Ball material values may wrap to two lines if the finish value exceeds the maximum column width.

(5) **MSL rating/Peak reflow:** The moisture sensitivity level ratings and peak solder (reflow) temperatures. In the event that a part has multiple moisture sensitivity ratings, only the lowest level per JEDEC standards is shown. Refer to the shipping label for the actual reflow temperature that will be used to mount the part to the printed circuit board.

(6) **Part marking:** There may be an additional marking, which relates to the logo, the lot trace code information, or the environmental category of the part.

Multiple part markings will be inside parentheses. Only one part marking contained in parentheses and separated by a "~" will appear on a part. If a line is indented then it is a continuation of the previous line and the two combined represent the entire part marking for that device.

Important Information and Disclaimer: The information provided on this page represents TI's knowledge and belief as of the date that it is provided. TI bases its knowledge and belief on information provided by third parties, and makes no representation or warranty as to the accuracy of such information. Efforts are underway to better integrate information from third parties. TI has taken and continues to take reasonable steps to provide representative and accurate information but may not have conducted destructive testing or chemical analysis on incoming materials and chemicals. TI and TI suppliers consider certain information to be proprietary, and thus CAS numbers and other limited information may not be available for release.

In no event shall TI's liability arising out of such information exceed the total purchase price of the TI part(s) at issue in this document sold by TI to Customer on an annual basis.

OTHER QUALIFIED VERSIONS OF SN74HCT244-Q1 :

- Catalog : SN74HCT244
- Enhanced Product : SN74HCT244-EP
- Military : SN54HCT244

NOTE: Qualified Version Definitions:

- Catalog - TI's standard catalog product
- Enhanced Product - Supports Defense, Aerospace and Medical Applications
- Military - QML certified for Military and Defense Applications

TAPE AND REEL INFORMATION

REEL DIMENSIONS

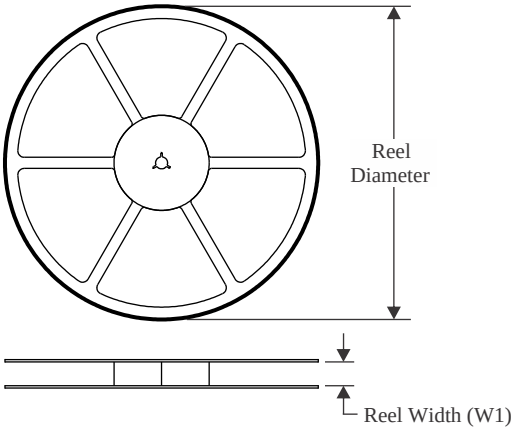

TAPE DIMENSIONS

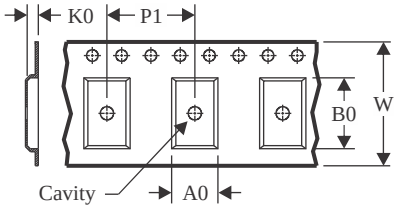

A0	Dimension designed to accommodate the component width
B0	Dimension designed to accommodate the component length
K0	Dimension designed to accommodate the component thickness
W	Overall width of the carrier tape
P1	Pitch between successive cavity centers

QUADRANT ASSIGNMENTS FOR PIN 1 ORIENTATION IN TAPE

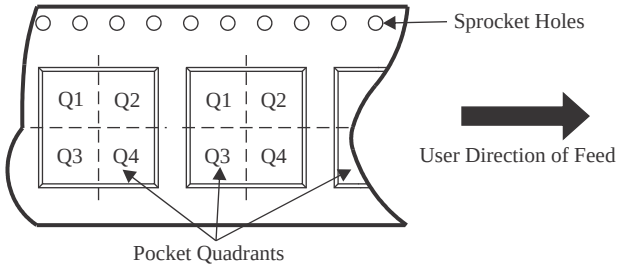

*All dimensions are nominal

Device	Package Type	Package Drawing	Pins	SPQ	Reel Diameter (mm)	Reel Width W1 (mm)	A0 (mm)	B0 (mm)	K0 (mm)	P1 (mm)	W (mm)	Pin1 Quadrant
SN74HCT244QPWRG4Q1	TSSOP	PW	20	2000	330.0	16.4	6.95	7.0	1.4	8.0	16.0	Q1
SN74HCT244QPWRQ1	TSSOP	PW	20	2000	330.0	16.4	6.95	7.0	1.4	8.0	16.0	Q1

TAPE AND REEL BOX DIMENSIONS

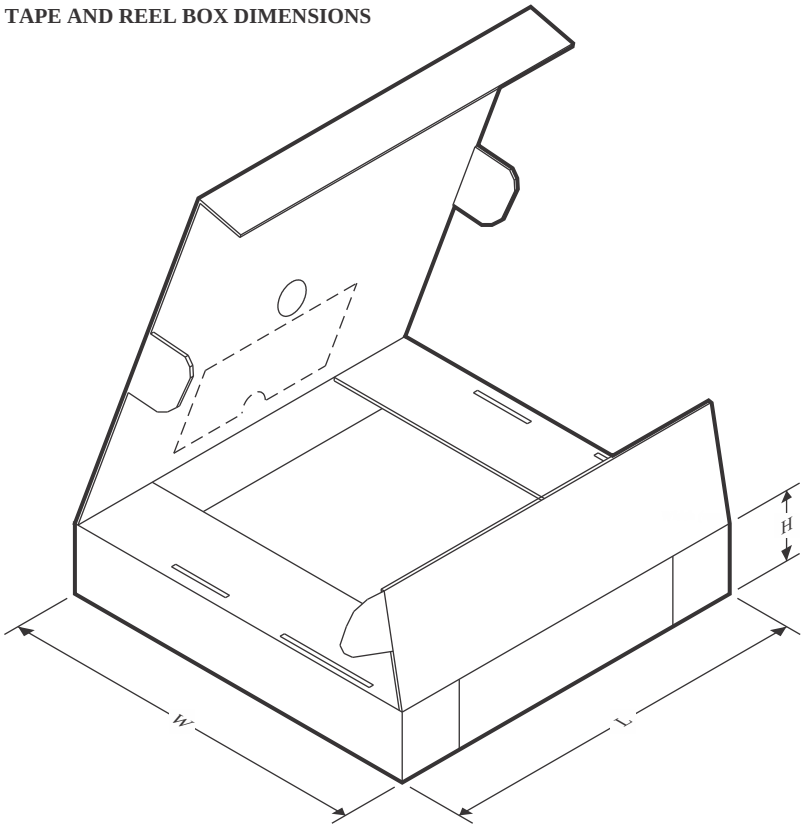

*All dimensions are nominal

Device	Package Type	Package Drawing	Pins	SPQ	Length (mm)	Width (mm)	Height (mm)
SN74HCT244QPWRG4Q1	TSSOP	PW	20	2000	353.0	353.0	32.0
SN74HCT244QPWRQ1	TSSOP	PW	20	2000	353.0	353.0	32.0

PACKAGE OUTLINE

PW0020A

TSSOP - 1.2 mm max height

SMALL OUTLINE PACKAGE

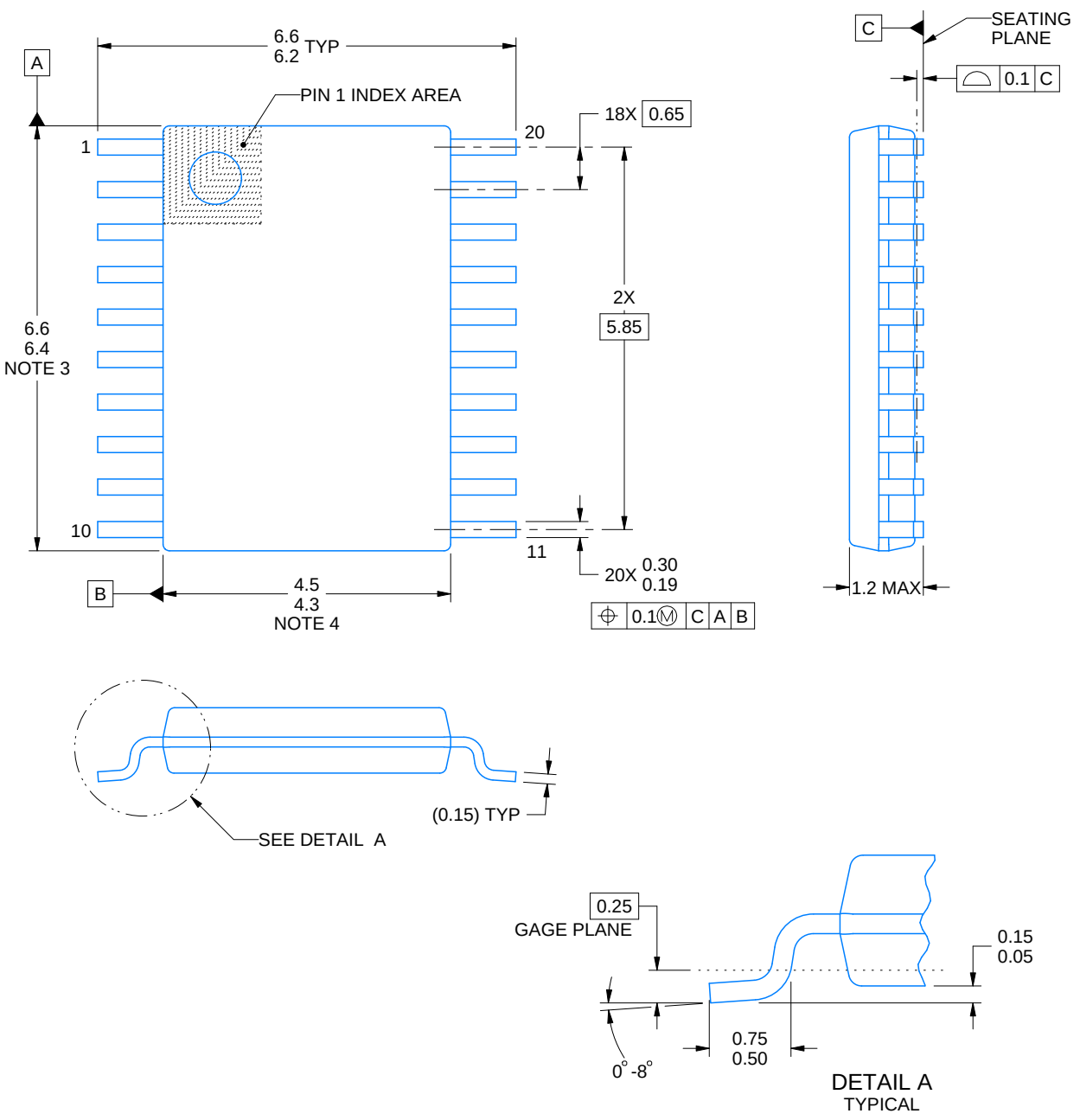

NOTES:

1. All linear dimensions are in millimeters. Any dimensions in parenthesis are for reference only. Dimensioning and tolerancing per ASME Y14.5M.
2. This drawing is subject to change without notice.
3. This dimension does not include mold flash, protrusions, or gate burrs. Mold flash, protrusions, or gate burrs shall not exceed 0.15 mm per side.
4. This dimension does not include interlead flash. Interlead flash shall not exceed 0.25 mm per side.
5. Reference JEDEC registration MO-153.

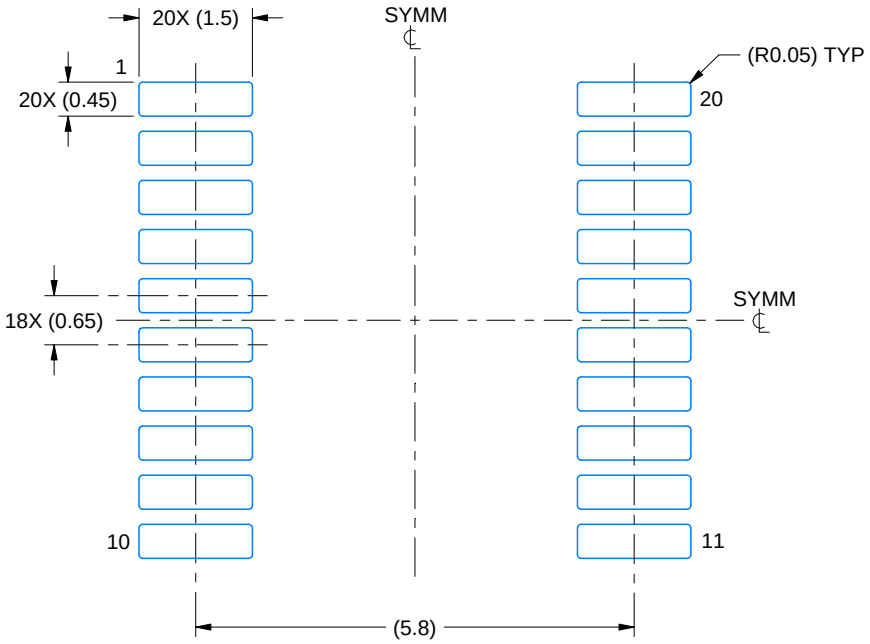

LAND PATTERN EXAMPLE
EXPOSED METAL SHOWN
SCALE: 10X



SOLDER MASK DETAILS

4220206/A 02/2017

NOTES: (continued)

6. Publication IPC-7351 may have alternate designs.
7. Solder mask tolerances between and around signal pads can vary based on board fabrication site.

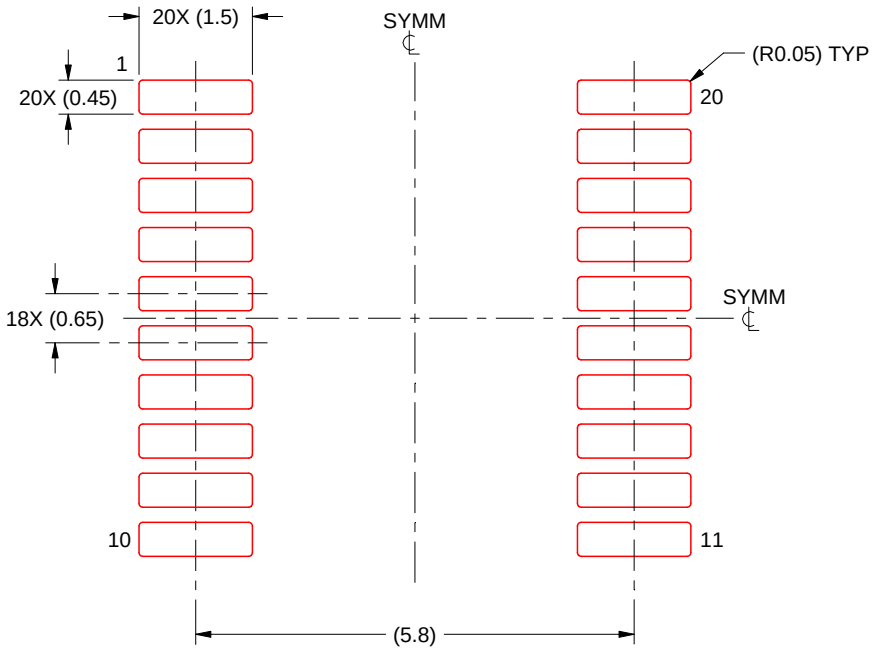

SOLDER PASTE EXAMPLE
BASED ON 0.125 mm THICK STENCIL
SCALE: 10X

4220206/A 02/2017

NOTES: (continued)

8. Laser cutting apertures with trapezoidal walls and rounded corners may offer better paste release. IPC-7525 may have alternate design recommendations.
9. Board assembly site may have different recommendations for stencil design.

IMPORTANT NOTICE AND DISCLAIMER

TI PROVIDES TECHNICAL AND RELIABILITY DATA (INCLUDING DATASHEETS), DESIGN RESOURCES (INCLUDING REFERENCE DESIGNS), APPLICATION OR OTHER DESIGN ADVICE, WEB TOOLS, SAFETY INFORMATION, AND OTHER RESOURCES “AS IS” AND WITH ALL FAULTS, AND DISCLAIMS ALL WARRANTIES, EXPRESS AND IMPLIED, INCLUDING WITHOUT LIMITATION ANY IMPLIED WARRANTIES OF MERCHANTABILITY, FITNESS FOR A PARTICULAR PURPOSE OR NON-INFRINGEMENT OF THIRD PARTY INTELLECTUAL PROPERTY RIGHTS.

These resources are intended for skilled developers designing with TI products. You are solely responsible for (1) selecting the appropriate TI products for your application, (2) designing, validating and testing your application, and (3) ensuring your application meets applicable standards, and any other safety, security, regulatory or other requirements.

These resources are subject to change without notice. TI grants you permission to use these resources only for development of an application that uses the TI products described in the resource. Other reproduction and display of these resources is prohibited. No license is granted to any other TI intellectual property right or to any third party intellectual property right. TI disclaims responsibility for, and you fully indemnify TI and its representatives against any claims, damages, costs, losses, and liabilities arising out of your use of these resources.

TI’s products are provided subject to TI’s Terms of Sale, TI’s General Quality Guidelines, or other applicable terms available either on ti.com or provided in conjunction with such TI products. TI’s provision of these resources does not expand or otherwise alter TI’s applicable warranties or warranty disclaimers for TI products. Unless TI explicitly designates a product as custom or customer-specified, TI products are standard, catalog, general purpose devices.

TI objects to and rejects any additional or different terms you may propose.

Copyright © 2026, Texas Instruments Incorporated

Last updated 10/2025