SN74LV05A Hex Inverters With Open-Drain Outputs

1 Features

- V_{CC} operation of 2 V to 5.5 V
- Typical V_{OLP} (output ground bounce) < 0.8 V at V_{CC} = 3.3 V, T_A = 25°C
- Typical V_{OHV} (output V_{OH} undershoot) > 2.3 V at V_{CC} = 3.3 V, T_A = 25°C
- Support mixed-mode voltage operation on all ports
- I_{off} supports partial-power-down mode operation
- Latch-up performance exceeds 250 mA per JESD 17

2 Applications

- Electronic points of sale
- I/O modules: digital PLC/DCS inputs
- Motor drives and controls
- Servers
- Network switches
- Tests and measurements

3 Description

The SN74LV05A device contains six independent inverters designed for 2 V to 5.5 V V_{CC} operation.

This device performs the Boolean function $Y = \overline{A}$.

Package Information(1)

PART NUMBER	PACKAGE	BODY SIZE (NOM)
SN74LV05A	DGV (TVSOP, 14)	3.60 mm × 4.40 mm
	D (SOIC, 14)	8.65 mm × 3.91 mm
	NS (SO, 14)	10.30 mm × 5.30 mm
	PW (TSSOP, 14)	5.00 mm × 4.40 mm

(1) For all available packages, see the orderable addendum at the end of the data sheet.



Simplified Schematic

An IMPORTANT NOTICE at the end of this data sheet addresses availability, warranty, changes, use in safety-critical applications, intellectual property matters and other important disclaimers. UNLESS OTHERWISE NOTED, this document contains PRODUCTION DATA.

Table of Contents

1 Features....1
2 Applications....1
3 Description....1
4 Revision History....2
5 Pin Configuration and Functions....3
6 Specifications....4
6.1 Absolute Maximum Ratings....4
6.2 ESD Ratings....4
6.3 Recommended Operating Conditions....5
6.4 Thermal Information....5
6.5 Electrical Characteristics....5
6.6 Switching Characteristics, V_{CC} = 2.5 V ± 0.2 V....6
6.7 Switching Characteristics, V_{CC} = 3.3 V ± 0.3 V....6
6.8 Switching Characteristics, V_{CC} = 5 V ± 0.5 V....6
6.9 Noise Characteristics....6
6.10 Operating Characteristics....7
6.11 Typical Characteristics....7
7 Parameter Measurement Information....8
8 Detailed Description....9
8.1 Overview....9
8.2 Functional Block Diagram....9
8.3 Feature Description....9
8.4 Device Functional Modes....9
9 Application and Implementation....10
9.1 Application Information....10
9.2 Typical Application....10
9.3 Power Supply Recommendations....12
9.4 Layout....12
10 Device and Documentation Support....13
10.1 Documentation Support....13
10.2 Receiving Notification of Documentation Updates....13
10.3 Support Resources....13
10.4 Trademarks....13
10.5 Electrostatic Discharge Caution....13
10.6 Glossary....13
11 Mechanical, Packaging, and Orderable Information....13

4 Revision History

NOTE: Page numbers for previous revisions may differ from page numbers in the current version.

Changes from Revision J (December 2014) to Revision K (March 2023)	Page
• Updated the format of tables, figures, and cross-references throughout the document and removed references to DB package	1

Changes from Revision I (April 2005) to Revision J (December 2014)	Page
• Added *Applications*, *Device Information* table, *Pin Functions* table, *ESD Ratings* table, *Thermal Information* table, *Typical Characteristics*, *Feature Description* section, *Device Functional Modes*, *Application and Implementation* section, *Power Supply Recommendations* section, *Layout* section, *Device and Documentation Support* section, and *Mechanical, Packaging, and Orderable Information* section	1
• Deleted *Ordering Information* table	1
• MAX operating temperature to 125°C in *Recommended Operating Conditions* table	5

Copyright © 2023 Texas Instruments Incorporated

5 Pin Configuration and Functions

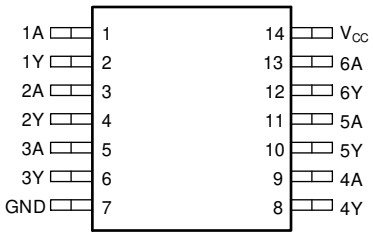

Figure 5-1. D, DGV, NS, or PW Package (Top View)

Table 5-1. Pin Functions

PIN		TYPE(1)	DESCRIPTION
NO.	NAME		
1	1A	I	1A Input
2	1Y	O	1Y Output
3	2A	I	2A Input
4	2Y	O	2Y Output
5	3A	I	3A Input
6	3Y	O	3Y Output
7	GND	—	Ground Pin
8	4Y	O	4Y Output
9	4A	I	4A Input
10	5Y	O	5Y Output
11	5A	I	5A Input
12	6Y	O	6Y Output
13	6A	I	6A Input
14	V_{CC}	—	Power Pin

(1) Signal Types: I = Input, O = Output, I/O = Input or Output.

Copyright © 2023 Texas Instruments Incorporated

6 Specifications

6.1 Absolute Maximum Ratings

over operating free-air temperature range (unless otherwise noted)(1)

			MIN	MAX	UNIT
V_{CC}	Supply voltage range		–0.5	7	V
V_I	Input voltage range(2)		–0.5	7	V
V_O	Voltage range applied to any output in the high-impedance or power-off state(2)		–0.5	7	V
V_O	Output voltage range(2) (3)		–0.5	V_{CC} + 0.5	V
I_{IK}	Input clamp current	V_I < 0		–20	mA
I_{OK}	Output clamp current	V_O < 0		–50	mA
I_O	Continuous output current	V_O = 0 to V_{CC}		±25	mA
	Continuous current through V_{CC} or GND			±50	mA
T_J	Junction temperature			150	°C
T_{stg}	Storage temperature range		–65	150	°C

(1) Stresses beyond those listed under *Absolute Maximum Ratings* may cause permanent damage to the device. These are stress ratings only, and functional operation of the device at these or any other conditions beyond those indicated under *Section 6.3* is not implied. Exposure to absolute-maximum-rated conditions for extended periods may affect device reliability.
(2) The input and output negative-voltage ratings may be exceeded if the input and output current ratings are observed.
(3) This value is limited to 5.5-V maximum.

6.2 ESD Ratings

			VALUE	UNIT
$V_{(ESD)}$	Electrostatic discharge	Human body model (HBM), per ANSI/ESDA/JEDEC JS-001, all pins(1)	2500	V
		Charged device model (CDM), per JEDEC specification JESD22-C101, all pins(2)	2000	

(1) JEDEC document JEP155 states that 500-V HBM allows safe manufacturing with a standard ESD control process.
(2) JEDEC document JEP157 states that 250-V CDM allows safe manufacturing with a standard ESD control process.

Copyright © 2023 Texas Instruments Incorporated

6.3 Recommended Operating Conditions

over operating free-air temperature range (unless otherwise noted)(1)

			MIN	MAX	UNIT
V_{CC}	Supply voltage		2	5.5	V
V_{IH}	High-level input voltage	V_{CC} = 2 V	1.5		V
		V_{CC} = 2.3 V to 2.7 V	V_{CC} × 0.7		
		V_{CC} = 3 V to 3.6 V	V_{CC} × 0.7		
		V_{CC} = 4.5 V to 5.5 V	V_{CC} × 0.7		
V_{IL}	Low-level input voltage	V_{CC} = 2 V		0.5	V
		V_{CC} = 2.3 V to 2.7 V		V_{CC} × 0.3	
		V_{CC} = 3 V to 3.6 V		V_{CC} × 0.3	
		V_{CC} = 4.5 V to 5.5 V		V_{CC} × 0.3	
V_I	Input voltage		0	5.5	V
V_O	Output voltage		0	5.5	V
I_{OL}	Low-level output current	V_{CC} = 2 V		50	μA
		V_{CC} = 2.3 V to 2.7 V		2	mA
		V_{CC} = 3 V to 3.6 V		6	
		V_{CC} = 4.5 V to 5.5 V		12	
Δt/Δv	Input transition rise or fall rate	V_{CC} = 2.3 V to 2.7 V		200	ns/V
		V_{CC} = 3 V to 3.6 V		100	
		V_{CC} = 4.5 V to 5.5 V		20	
T_A	Operating free-air temperature		–40	125	°C

(1) All unused inputs of the device must be held at V_{CC} or GND to ensure proper device operation. Refer to the TI application report, *Implications of Slow or Floating CMOS Inputs* (SCBA004).

6.4 Thermal Information

THERMAL METRIC(1)		SN74LV05A				UNIT
		D	DGV	NS	PW	
		14 PINS				
$R_{\theta JA}$	Junction-to-ambient thermal resistance	94.9	130.4	91.4	122.6	°C/W
$R_{\theta JC(top)}$	Junction-to-case (top) thermal resistance	56.3	53.4	49.0	51.3	
$R_{\theta JB}$	Junction-to-board thermal resistance	49.2	63.5	50.2	64.4	
ψ_{JT}	Junction-to-top characterization parameter	20.7	7.3	15.3	6.8	
ψ_{JB}	Junction-to-board characterization parameter	48.9	62.8	49.8	63.8	

(1) For more information about traditional and new thermal metrics, see the *IC Package Thermal Metrics* application report (SPRA953).

6.5 Electrical Characteristics

over recommended operating free-air temperature range (unless otherwise noted)

PARAMETER		TEST CONDITIONS	V_{CC}	T_A = 25°C			–40°C to 85°C		–40°C to 125°C		UNIT
				MIN	TYP	MAX	MIN	MAX	MIN	MAX	
V_{OL}	Low-level output voltage	I_{OL} = 50 μA	2 V to 5.5 V			0.1		0.1		0.1	V
		I_{OL} = 2 mA	2.3 V			0.4		0.4		0.4	
		I_{OL} = 6 mA	3 V			0.44		0.44		0.44	
		I_{OL} = 12 mA	4.5 V			0.55		0.55		0.6	
I_I	Input leakage current	V_I = 5.5 V or GND	0 to 5.5 V			±1		±1		±1	μA

Copyright © 2023 Texas Instruments Incorporated

6.5 Electrical Characteristics (continued)

over recommended operating free-air temperature range (unless otherwise noted)

PARAMETER		TEST CONDITIONS	V_{CC}	T_A = 25°C			–40°C to 85°C		–40°C to 125°C		UNIT
				MIN	TYP	MAX	MIN	MAX	MIN	MAX	
I_{CC}	Static supply current	V_I = V_{CC} or GND, I_O = 0	5.5			20		20		20	µA
I_{off}	Input/Output PowerOff Leakage Current	V_I or V_O = 0 to 5.5 V	0			5		5		5	µA
C_i	Input capacitance V	V_I = V_{CC} or GND	3.3 V		2.5						pF

6.6 Switching Characteristics, V_{CC} = 2.5 V ± 0.2 V

over recommended operating free-air temperature range (unless otherwise noted) (see Load Circuit and Voltage Waveforms)

PARAMETER	FROM (INPUT)	TO (OUTPUT)	LOAD CAPACITANCE	T_A = 25°C			–40°C to 85°C		–40°C to 125°C		UNIT
				MIN	TYP	MAX	MIN	MAX	MIN	MAX	
t_{PLH}	A	Y	C_L = 15 pF		3.6(1)	10.4(1)	1	13	1	13.5	ns
t_{PHL}					5.8(1)	12.2(1)	1	15	1	16.5	
t_{PLH}	A	Y	C_L = 50 pF		6.1	15.2	1	18	1	18.5	ns
t_{PHL}					8.1	16.6	1	19.5	1	21	

(1) On products compliant to MIL-PRF-38535, this parameter is not production tested.

6.7 Switching Characteristics, V_{CC} = 3.3 V ± 0.3 V

over recommended operating free-air temperature range (unless otherwise noted) (see Load Circuit and Voltage Waveforms)

PARAMETER	FROM (INPUT)	TO (OUTPUT)	LOAD CAPACITANCE	T_A = 25°C			–40°C to 85°C		–40°C to 125°C		UNIT
				MIN	TYP	MAX	MIN	MAX	MIN	MAX	
t_{PLH}	A	Y	C_L = 15 pF		2.9(1)	7.1(1)	1	8.5	1	9	ns
t_{PHL}					4(1)	7.1(1)	1	8.5	1	9.5	
t_{PLH}	A	Y	C_L = 50 pF		4.7	10.6	1	12	1	12.5	ns
t_{PHL}					5.8	10.6	1	12	1	13	

(1) On products compliant to MIL-PRF-38535, this parameter is not production tested.

6.8 Switching Characteristics, V_{CC} = 5 V ± 0.5 V

over recommended operating free-air temperature range (unless otherwise noted) (see Load Circuit and Voltage Waveforms)

PARAMETER	FROM (INPUT)	TO (OUTPUT)	LOAD CAPACITANCE	T_A = 25°C			–40°C to 85°C		–40°C to 125°C		UNIT
				MIN	TYP	MAX	MIN	MAX	MIN	MAX	
t_{PLH}	A	Y	C_L = 15 pF		2.2(1)	5.5(1)	1	6.5	1	7	ns
t_{PHL}					2.9(1)	5.5(1)	1	6.5	1	7.5	
t_{PLH}	A	Y	C_L = 50 pF		3.4	7.5	1	8.5	1	9	ns
t_{PHL}					4.2	7.5	1	8.5	1	9.5	

(1) On products compliant to MIL-PRF-38535, this parameter is not production tested.

6.9 Noise Characteristics

V_{CC} = 3.3 V, C_L = 50 pF, T_A = 25°C

PARAMETER		SN74LV05A			UNIT
		MIN	TYP	MAX	
$V_{OL(P)}$	Quiet output, maximum dynamic V_{OL}		0.55	0.8	V
$V_{OL(V)}$	Quiet output, minimum dynamic V_{OL}		–0.04	–0.8	V
$V_{OH(V)}$	Quiet output, minimum dynamic V_{OH}		3.12		V
$V_{IH(D)}$	High-level dynamic input voltage	2.31			V

Copyright © 2023 Texas Instruments Incorporated

V_{CC} = 3.3 V, C_L = 50 pF, T_A = 25°C

PARAMETER		SN74LV05A			UNIT
		MIN	TYP	MAX	
$V_{IL(D)}$	Low-level dynamic input voltage			0.97	V

6.10 Operating Characteristics

T_A = 25°C

PARAMETER		TEST CONDITIONS		V_{CC}	TYP	UNIT
C_{pd}	Power dissipation capacitance	C_L = 50 pF	f = 10 MHz	3.3 V	2.5	pF
				5 V	3	

6.11 Typical Characteristics

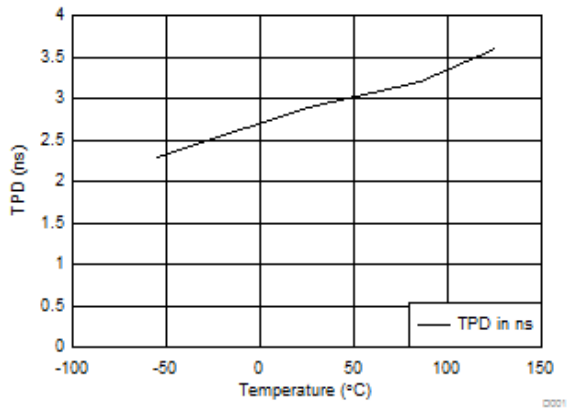

Figure 6-1. TPD vs Temperature

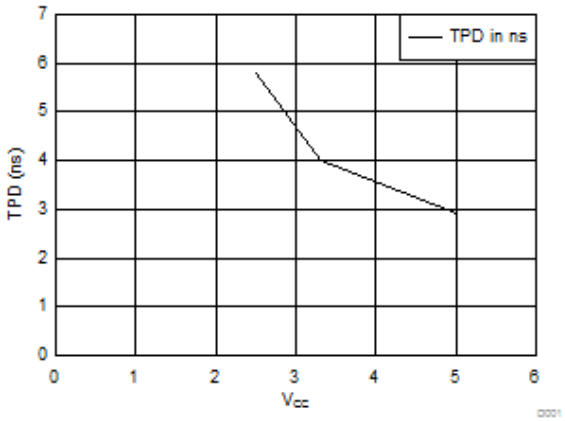

Figure 6-2. TPD vs V_{CC} at 25°C

Copyright © 2023 Texas Instruments Incorporated

7 Parameter Measurement Information

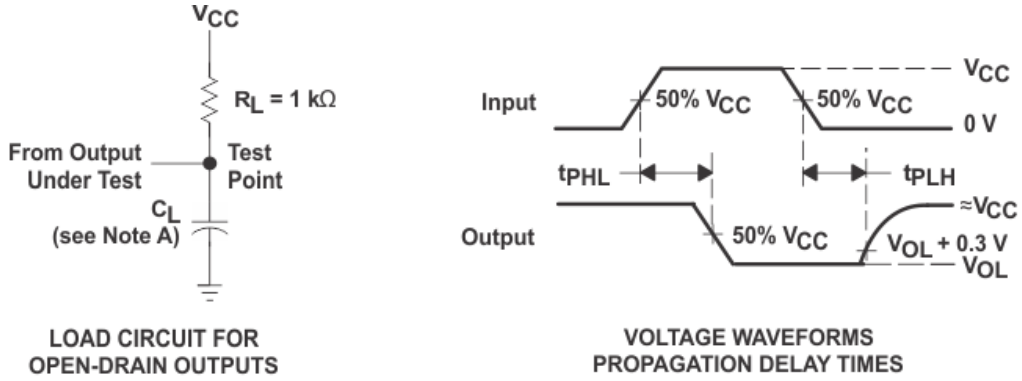

NOTES: A. C_L includes probe and jig capacitance.
B. All input pulses are supplied by generators having the following characteristics: PRR ≤ 1 MHz, Z_O = 50 Ω, t_r ≤ 3 ns, t_f ≤ 3 ns.
C. The outputs are measured one at a time, with one input transition per measurement.

Figure 7-1. Load Circuit and Voltage Waveforms

Copyright © 2023 Texas Instruments Incorporated

8 Detailed Description

8.1 Overview

The SN74LV05A device contains six independent inverters designed for 2-V to 5.5-V V_{CC} operation.

This device performs the Boolean function $Y = \overline{A}$.

The open-drain outputs require pull-up resistors to perform correctly and can be connected to other open-drain outputs to implement active-low, wired-OR or active-high wired-AND functions.

This device is fully specified for partial-power-down applications using I_{off}. The I_{off} circuitry disables the outputs, preventing damaging current backflow through the device when it is powered down.

8.2 Functional Block Diagram



Figure 8-1. Logic Diagram (Positive Logic)

8.3 Feature Description

- Wide operating voltage range
  - Operates from 2 V to 5.5 V
- Allows down-voltage translation
  - Inputs accept voltages to 5.5 V
- I_{off} feature
  - Allows voltages on the inputs and outputs when V_{CC} is 0 V

8.4 Device Functional Modes

Table 8-1. Function Table (Each Inverter)

INPUT(1) A	OUTPUT(2) Y
H	L
L	H

(1) H = High Voltage Level, L = Low Voltage Level, X = Don't Care

(2) H = Driving High, L = Driving Low, Z = High Impedance State

Copyright © 2023 Texas Instruments Incorporated

9 Application and Implementation

Note

Information in the following applications sections is not part of the TI component specification, and TI does not warrant its accuracy or completeness. TI's customers are responsible for determining suitability of components for their purposes, as well as validating and testing their design implementation to confirm system functionality.

9.1 Application Information

SN74LV05A is a low-drive, open-drain CMOS device that can be used for a multitude of buffer type functions. The inputs are 5.5-V tolerant and the outputs are open-drain and 5.5-V tolerant, allowing it to translate up to 5.5 V or down to any other voltage between GND and 5.5 V.

9.2 Typical Application

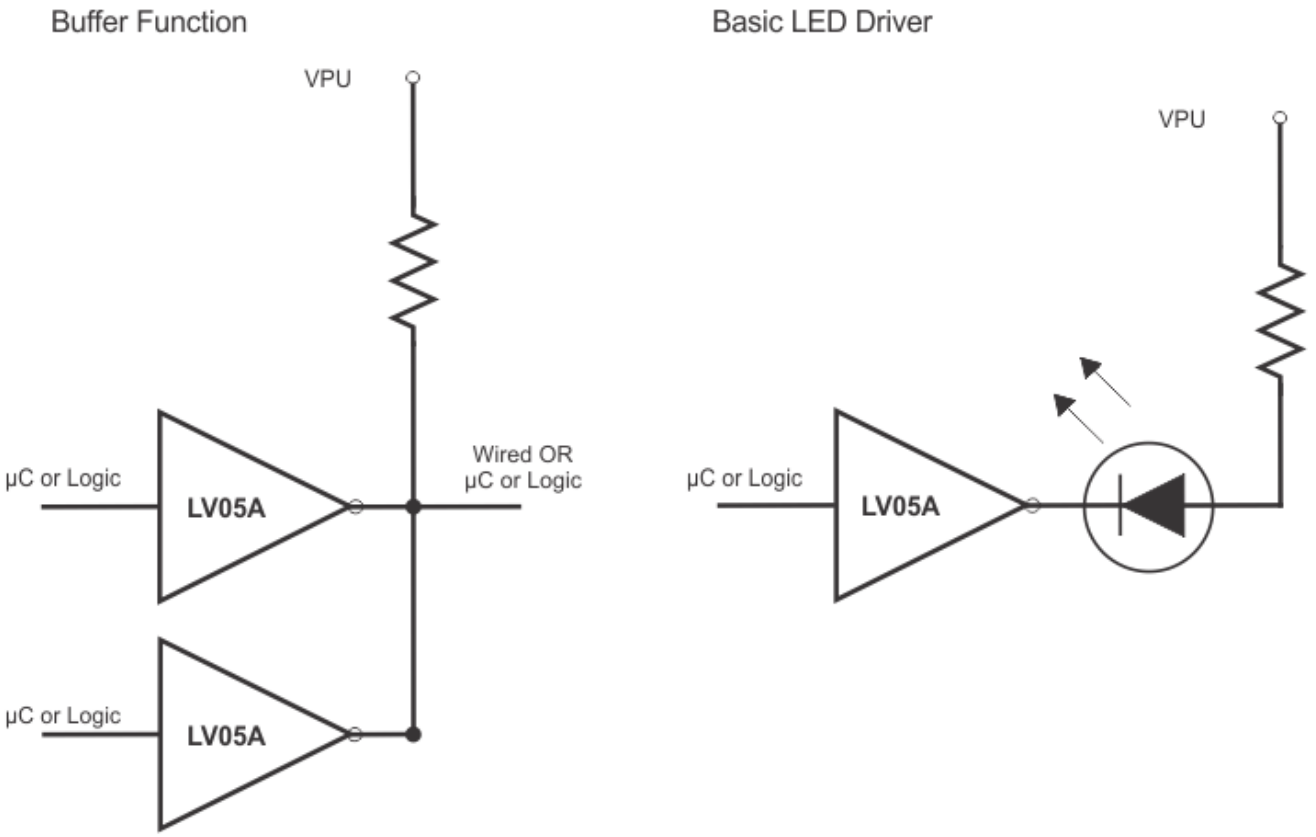

Figure 9-1. Typical Application Schematic

9.2.1 Design Requirements

This device uses CMOS technology and has balanced output drive. Care should be taken to avoid bus contention because it can drive currents that would exceed maximum limits. The high drive will also create fast edges into light loads, so routing and load conditions should be considered to prevent ringing.

9.2.2 Detailed Design Procedure

1. Recommended Input Conditions
   - For rise time and fall time specifications, see Δt/ΔV in the *Section 6.3* table.
   - For specified High and low levels, see V_{IH} and V_{IL} in the *Section 6.3* table.

Copyright © 2023 Texas Instruments Incorporated

- Inputs are overvoltage tolerant allowing them to go as high as 5.5 V at any valid V_{CC}.

2. Recommend Output Conditions
   - Load currents should not exceed 35 mA per output and 50 mA total for the part.

9.2.3 Application Curves

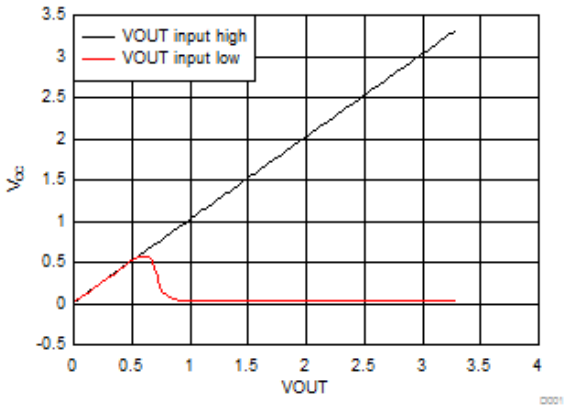

Figure 9-2. Output at Power Up with 4k Pull-Up 3.3 V

Copyright © 2023 Texas Instruments Incorporated

9.3 Power Supply Recommendations

The power supply can be any voltage between the MIN and MAX supply voltage rating located in the *Section 6.3* table.

Each V_{CC} pin should have a good bypass capacitor to prevent power disturbance. For devices with a single supply, 0.1 µF is recommended. If there are multiple V_{CC} pins, 0.01 µF or 0.022 µF is recommended for each power pin. It is acceptable to parallel multiple bypass caps to reject different frequencies of noise. A 0.1 µF and 1 µF are commonly used in parallel. The bypass capacitor should be installed as close to the power pin as possible for best results.

9.4 Layout

9.4.1 Layout Guidelines

When using multiple bit logic devices, inputs should not float. In many cases, functions or parts of functions of digital logic devices are unused. Some examples are when only two inputs of a triple-input AND gate are used, or when only 3 of the 4-buffer gates are used. Such input pins should not be left unconnected because the undefined voltages at the outside connections result in undefined operational states.

Specified in Figure 9-3 are rules that must be observed under all circumstances. All unused inputs of digital logic devices must be connected to a high or low bias to prevent them from floating. The logic level that should be applied to any particular unused input depends on the function of the device. Generally they will be tied to GND or V_{CC}, whichever makes more sense or is more convenient. It is acceptable to float outputs unless the part is a transceiver.

9.4.2 Layout Example

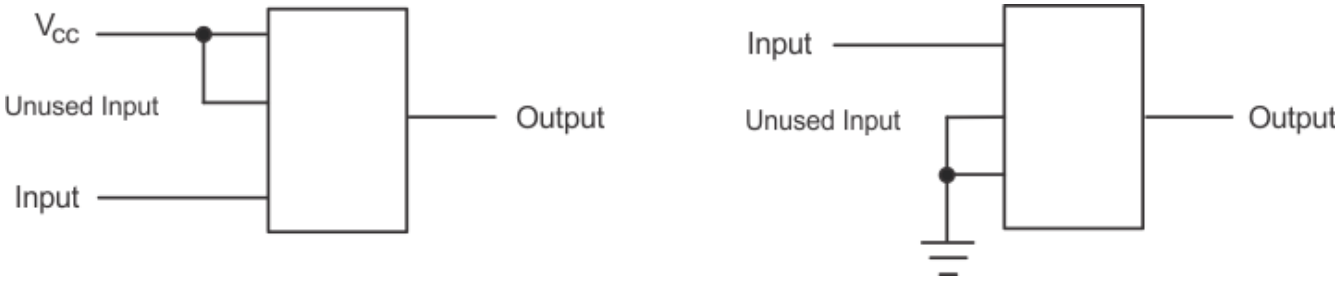

Figure 9-3. Layout Diagram

Copyright © 2023 Texas Instruments Incorporated

10 Device and Documentation Support

10.1 Documentation Support

10.1.1 Related Documentation

The table below lists quick access links. Categories include technical documents, support and community resources, tools and software, and quick access to sample or buy.

Table 10-1. Related Links

PARTS	PRODUCT FOLDER	SAMPLE & BUY	TECHNICAL DOCUMENTS	TOOLS & SOFTWARE	SUPPORT & COMMUNITY
SN74LV05A	Click here	Click here	Click here	Click here	Click here

10.2 Receiving Notification of Documentation Updates

To receive notification of documentation updates, navigate to the device product folder on ti.com. Click on *Subscribe to updates* to register and receive a weekly digest of any product information that has changed. For change details, review the revision history included in any revised document.

10.3 Support Resources

TI E2E™ support forums are an engineer's go-to source for fast, verified answers and design help — straight from the experts. Search existing answers or ask your own question to get the quick design help you need.

Linked content is provided "AS IS" by the respective contributors. They do not constitute TI specifications and do not necessarily reflect TI's views; see TI's Terms of Use.

10.4 Trademarks

TI E2E™ is a trademark of Texas Instruments.
All trademarks are the property of their respective owners.

10.5 Electrostatic Discharge Caution



This integrated circuit can be damaged by ESD. Texas Instruments recommends that all integrated circuits be handled with appropriate precautions. Failure to observe proper handling and installation procedures can cause damage.

ESD damage can range from subtle performance degradation to complete device failure. Precision integrated circuits may be more susceptible to damage because very small parametric changes could cause the device not to meet its published specifications.

10.6 Glossary

TI Glossary — This glossary lists and explains terms, acronyms, and definitions.

11 Mechanical, Packaging, and Orderable Information

The following pages include mechanical, packaging, and orderable information. This information is the most current data available for the designated devices. This data is subject to change without notice and revision of this document. For browser-based versions of this data sheet, refer to the left-hand navigation.

Copyright © 2023 Texas Instruments Incorporated

PACKAGING INFORMATION

Orderable part number	Status (1)	Material type (2)	Package | Pins	Package qty | Carrier	RoHS (3)	Lead finish/ Ball material (4)	MSL rating/ Peak reflow (5)	Op temp (°C)	Part marking (6)
SN74LV05AD	Obsolete	Production	SOIC (D) | 14	-	-	Call TI	Call TI	-40 to 125	LV05A
SN74LV05ADGVR	Active	Production	TVSOP (DGV) | 14	2000 | LARGE T&R	Yes	NIPDAU	Level-1-260C-UNLIM	-40 to 125	LV05A
SN74LV05ADGVR.A	Active	Production	TVSOP (DGV) | 14	2000 | LARGE T&R	Yes	NIPDAU	Level-1-260C-UNLIM	-40 to 125	LV05A
SN74LV05ADR	Active	Production	SOIC (D) | 14	2500 | LARGE T&R	Yes	NIPDAU	Level-1-260C-UNLIM	-40 to 125	LV05A
SN74LV05ADR.A	Active	Production	SOIC (D) | 14	2500 | LARGE T&R	Yes	NIPDAU	Level-1-260C-UNLIM	-40 to 125	LV05A
SN74LV05ANSR	Active	Production	SOP (NS) | 14	2000 | LARGE T&R	Yes	NIPDAU	Level-1-260C-UNLIM	-40 to 125	74LV05A
SN74LV05ANSR.A	Active	Production	SOP (NS) | 14	2000 | LARGE T&R	Yes	NIPDAU	Level-1-260C-UNLIM	-40 to 125	74LV05A
SN74LV05APW	Obsolete	Production	TSSOP (PW) | 14	-	-	Call TI	Call TI	-40 to 125	LV05A
SN74LV05APWR	Active	Production	TSSOP (PW) | 14	2000 | LARGE T&R	Yes	NIPDAU | SN	Level-1-260C-UNLIM	-40 to 125	(L05A, LV05A)
SN74LV05APWR.A	Active	Production	TSSOP (PW) | 14	2000 | LARGE T&R	Yes	NIPDAU	Level-1-260C-UNLIM	-40 to 125	(L05A, LV05A)
SN74LV05APWRG4	Active	Production	TSSOP (PW) | 14	2000 | LARGE T&R	Yes	NIPDAU	Level-1-260C-UNLIM	-40 to 125	LV05A
SN74LV05APWT	Obsolete	Production	TSSOP (PW) | 14	-	-	Call TI	Call TI	-40 to 125	LV05A

(1) **Status:** For more details on status, see our product life cycle.

(2) **Material type:** When designated, preproduction parts are prototypes/experimental devices, and are not yet approved or released for full production. Testing and final process, including without limitation quality assurance, reliability performance testing, and/or process qualification, may not yet be complete, and this item is subject to further changes or possible discontinuation. If available for ordering, purchases will be subject to an additional waiver at checkout, and are intended for early internal evaluation purposes only. These items are sold without warranties of any kind.

(3) **RoHS values:** Yes, No, RoHS Exempt. See the TI RoHS Statement for additional information and value definition.

(4) **Lead finish/Ball material:** Parts may have multiple material finish options. Finish options are separated by a vertical ruled line. Lead finish/Ball material values may wrap to two lines if the finish value exceeds the maximum column width.

(5) **MSL rating/Peak reflow:** The moisture sensitivity level ratings and peak solder (reflow) temperatures. In the event that a part has multiple moisture sensitivity ratings, only the lowest level per JEDEC standards is shown. Refer to the shipping label for the actual reflow temperature that will be used to mount the part to the printed circuit board.

(6) **Part marking:** There may be an additional marking, which relates to the logo, the lot trace code information, or the environmental category of the part.

Multiple part markings will be inside parentheses. Only one part marking contained in parentheses and separated by a "~" will appear on a part. If a line is indented then it is a continuation of the previous line and the two combined represent the entire part marking for that device.

Important Information and Disclaimer: The information provided on this page represents TI's knowledge and belief as of the date that it is provided. TI bases its knowledge and belief on information provided by third parties, and makes no representation or warranty as to the accuracy of such information. Efforts are underway to better integrate information from third parties. TI has taken and continues to take reasonable steps to provide representative and accurate information but may not have conducted destructive testing or chemical analysis on incoming materials and chemicals. TI and TI suppliers consider certain information to be proprietary, and thus CAS numbers and other limited information may not be available for release.

In no event shall TI's liability arising out of such information exceed the total purchase price of the TI part(s) at issue in this document sold by TI to Customer on an annual basis.

TAPE AND REEL INFORMATION

REEL DIMENSIONS

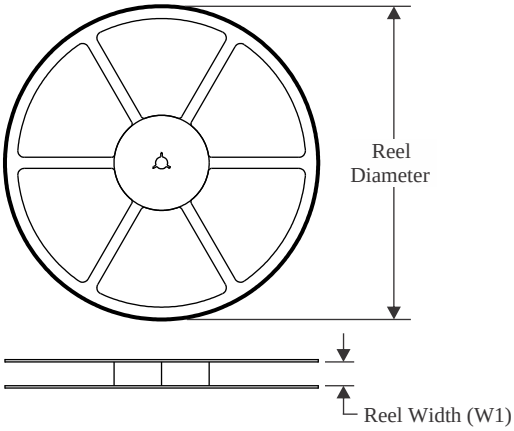

TAPE DIMENSIONS

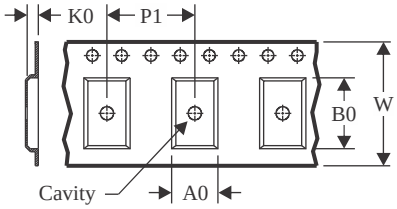

A0	Dimension designed to accommodate the component width
B0	Dimension designed to accommodate the component length
K0	Dimension designed to accommodate the component thickness
W	Overall width of the carrier tape
P1	Pitch between successive cavity centers

QUADRANT ASSIGNMENTS FOR PIN 1 ORIENTATION IN TAPE

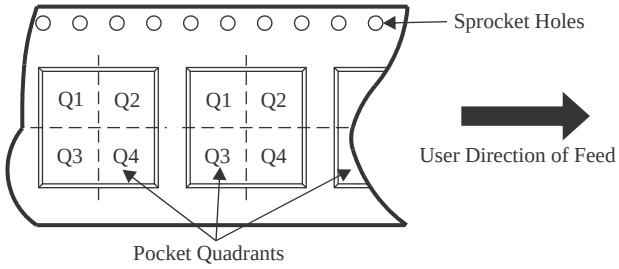

*All dimensions are nominal

Device	Package Type	Package Drawing	Pins	SPQ	Reel Diameter (mm)	Reel Width W1 (mm)	A0 (mm)	B0 (mm)	K0 (mm)	P1 (mm)	W (mm)	Pin1 Quadrant
SN74LV05ADGVR	TVSOP	DGV	14	2000	330.0	12.4	6.8	4.0	1.6	8.0	12.0	Q1
SN74LV05ADR	SOIC	D	14	2500	330.0	16.4	6.5	9.0	2.1	8.0	16.0	Q1
SN74LV05ANSR	SOP	NS	14	2000	330.0	16.4	8.1	10.4	2.5	12.0	16.0	Q1
SN74LV05APWR	TSSOP	PW	14	2000	330.0	12.4	6.9	5.6	1.6	8.0	12.0	Q1
SN74LV05APWR	TSSOP	PW	14	2000	330.0	12.4	6.9	5.6	1.6	8.0	12.0	Q1
SN74LV05APWRG4	TSSOP	PW	14	2000	330.0	12.4	6.9	5.6	1.6	8.0	12.0	Q1

TAPE AND REEL BOX DIMENSIONS

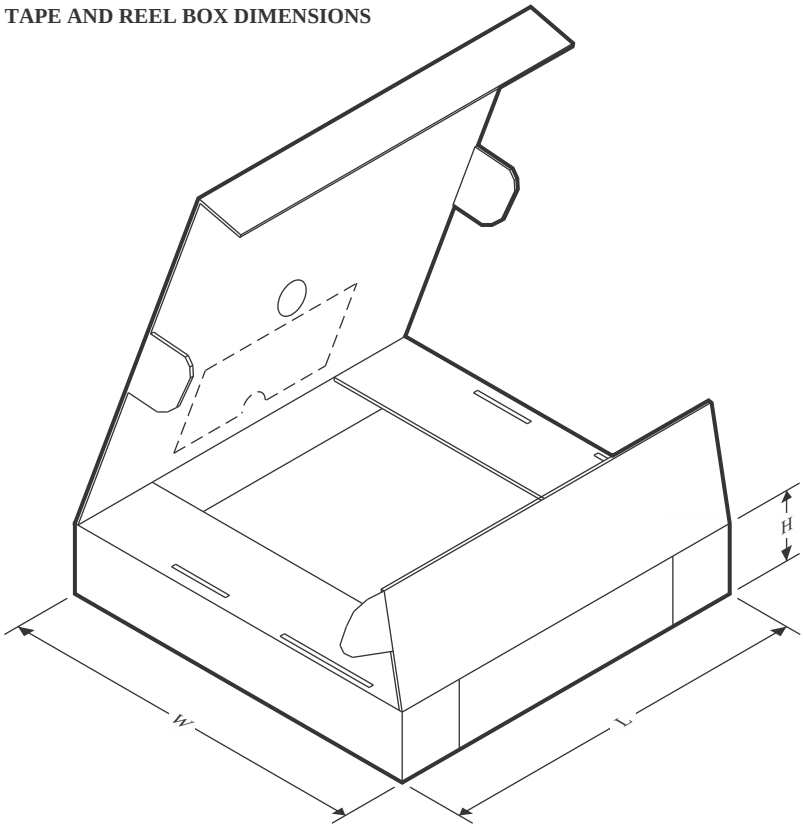

*All dimensions are nominal

Device	Package Type	Package Drawing	Pins	SPQ	Length (mm)	Width (mm)	Height (mm)
SN74LV05ADGVR	TVSOP	DGV	14	2000	353.0	353.0	32.0
SN74LV05ADR	SOIC	D	14	2500	353.0	353.0	32.0
SN74LV05ANSR	SOP	NS	14	2000	353.0	353.0	32.0
SN74LV05APWR	TSSOP	PW	14	2000	356.0	356.0	35.0
SN74LV05APWR	TSSOP	PW	14	2000	353.0	353.0	32.0
SN74LV05APWRG4	TSSOP	PW	14	2000	356.0	356.0	35.0

DGV (R-PDSO-G)** **PLASTIC SMALL-OUTLINE**

24 PINS SHOWN

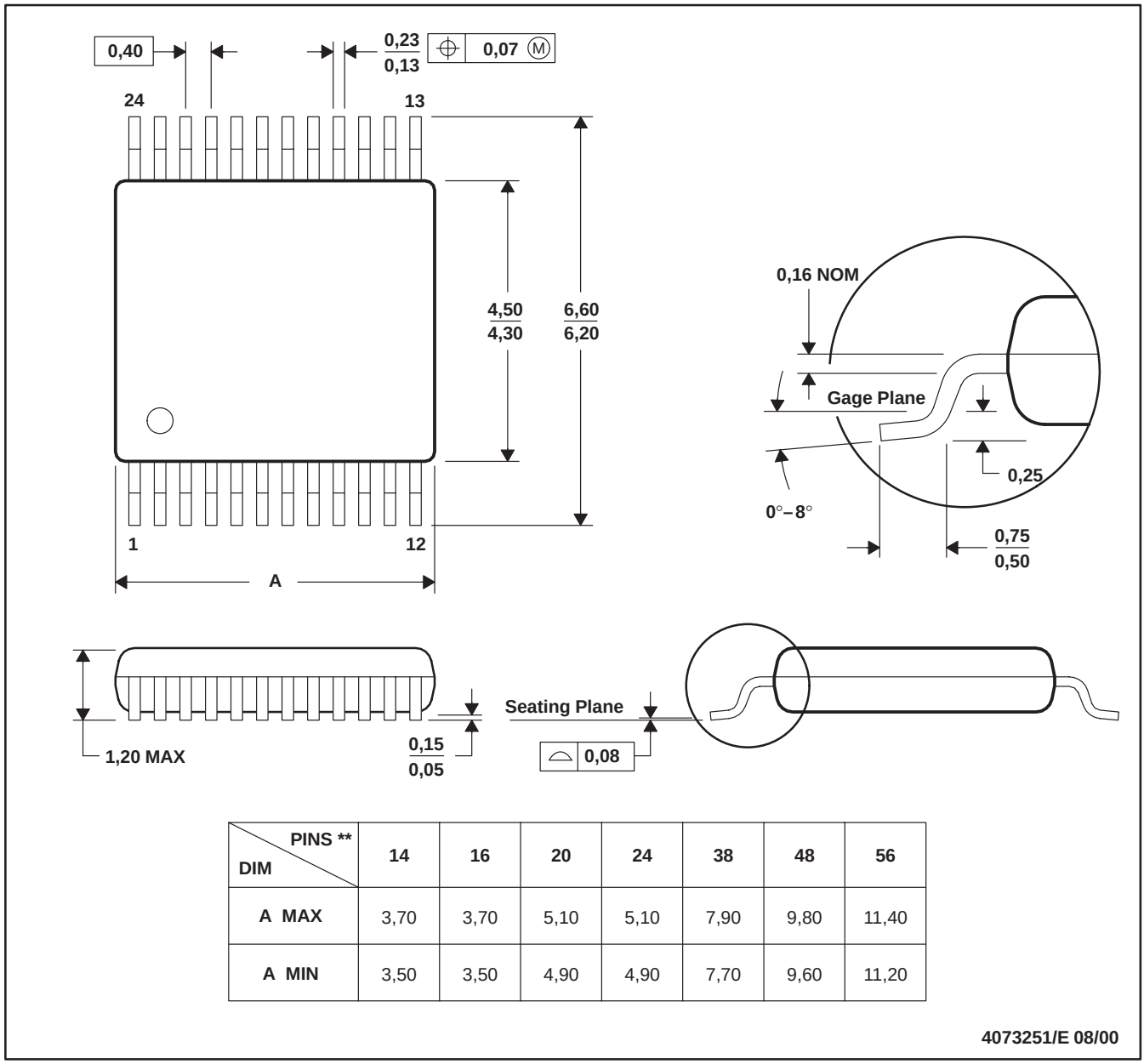

DIM \ PINS **	14	16	20	24	38	48	56
A MAX	3,70	3,70	5,10	5,10	7,90	9,80	11,40
A MIN	3,50	3,50	4,90	4,90	7,70	9,60	11,20

4073251/E 08/00

NOTES: A. All linear dimensions are in millimeters.
B. This drawing is subject to change without notice.
C. Body dimensions do not include mold flash or protrusion, not to exceed 0,15 per side.
D. Falls within JEDEC: 24/48 Pins – MO-153
14/16/20/56 Pins – MO-194

PACKAGE OUTLINE

PW0014A

TSSOP - 1.2 mm max height

SMALL OUTLINE PACKAGE

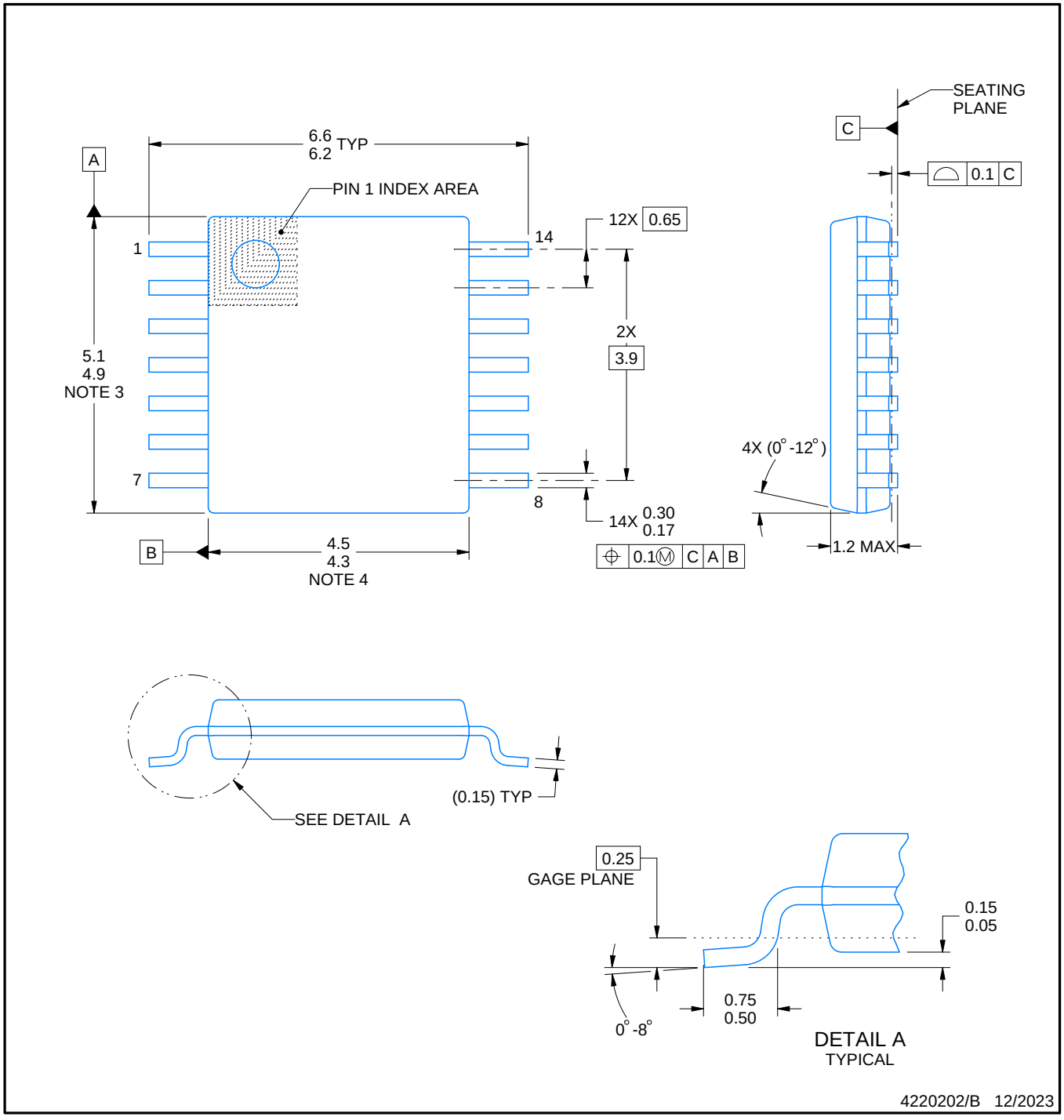

NOTES:

1. All linear dimensions are in millimeters. Any dimensions in parenthesis are for reference only. Dimensioning and tolerancing per ASME Y14.5M.
2. This drawing is subject to change without notice.
3. This dimension does not include mold flash, protrusions, or gate burrs. Mold flash, protrusions, or gate burrs shall not exceed 0.15 mm per side.
4. This dimension does not include interlead flash. Interlead flash shall not exceed 0.25 mm per side.
5. Reference JEDEC registration MO-153.

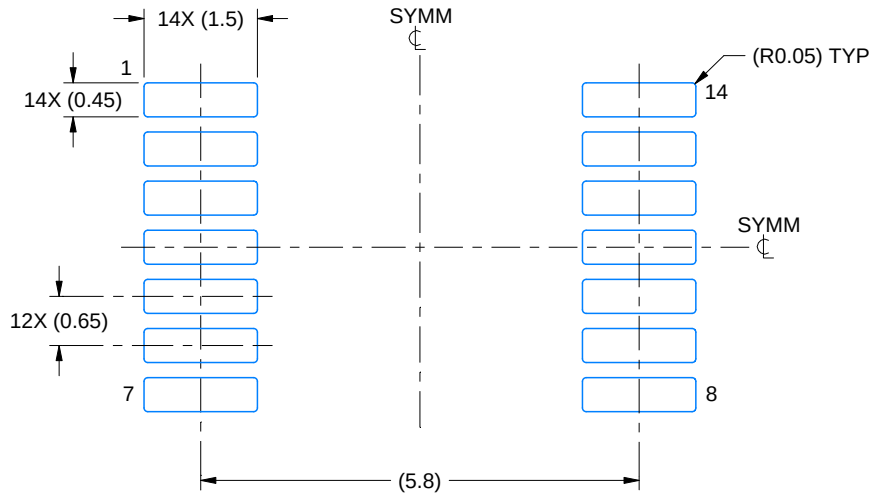

LAND PATTERN EXAMPLE
EXPOSED METAL SHOWN
SCALE: 10X

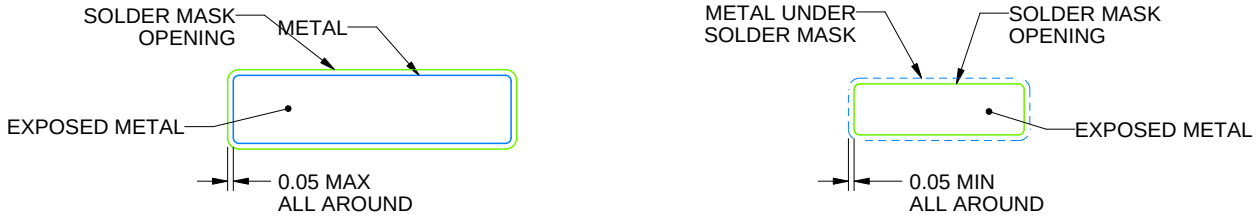

SOLDER MASK DETAILS

4220202/B 12/2023

NOTES: (continued)

6. Publication IPC-7351 may have alternate designs.
7. Solder mask tolerances between and around signal pads can vary based on board fabrication site.

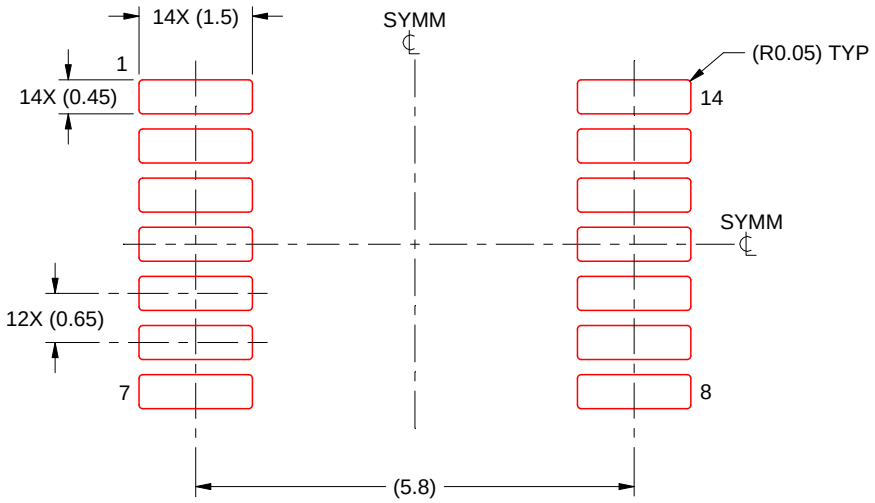

SOLDER PASTE EXAMPLE
BASED ON 0.125 mm THICK STENCIL
SCALE: 10X

4220202/B 12/2023

NOTES: (continued)

8. Laser cutting apertures with trapezoidal walls and rounded corners may offer better paste release. IPC-7525 may have alternate design recommendations.
9. Board assembly site may have different recommendations for stencil design.

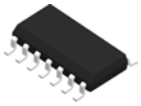

PACKAGE OUTLINE

D0014A

SOIC - 1.75 mm max height

SMALL OUTLINE INTEGRATED CIRCUIT

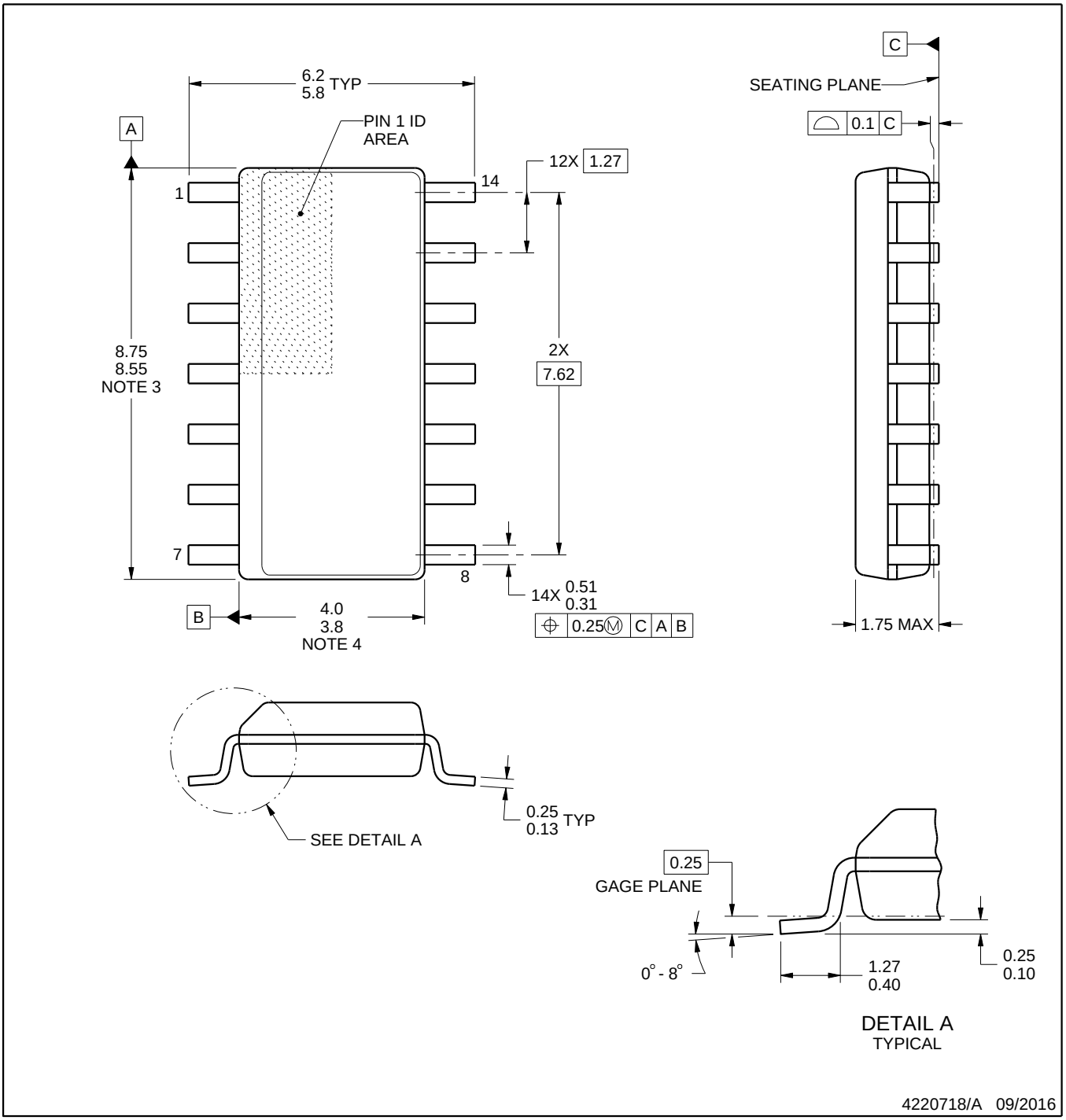

NOTES:

1. All linear dimensions are in millimeters. Dimensions in parenthesis are for reference only. Dimensioning and tolerancing per ASME Y14.5M.
2. This drawing is subject to change without notice.
3. This dimension does not include mold flash, protrusions, or gate burrs. Mold flash, protrusions, or gate burrs shall not exceed 0.15 mm, per side.
4. This dimension does not include interlead flash. Interlead flash shall not exceed 0.43 mm, per side.
5. Reference JEDEC registration MS-012, variation AB.

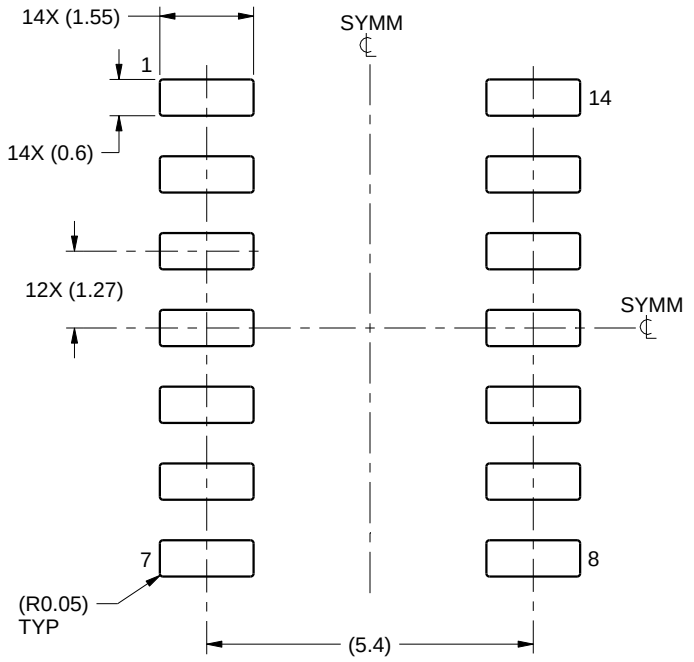

LAND PATTERN EXAMPLE
SCALE:8X

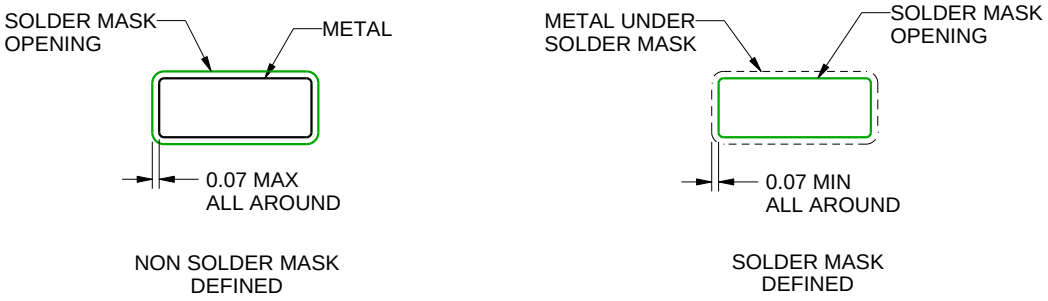

SOLDER MASK DETAILS

4220718/A 09/2016

NOTES: (continued)

6. Publication IPC-7351 may have alternate designs.
7. Solder mask tolerances between and around signal pads can vary based on board fabrication site.

EXAMPLE STENCIL DESIGN

D0014A

SOIC - 1.75 mm max height

SMALL OUTLINE INTEGRATED CIRCUIT

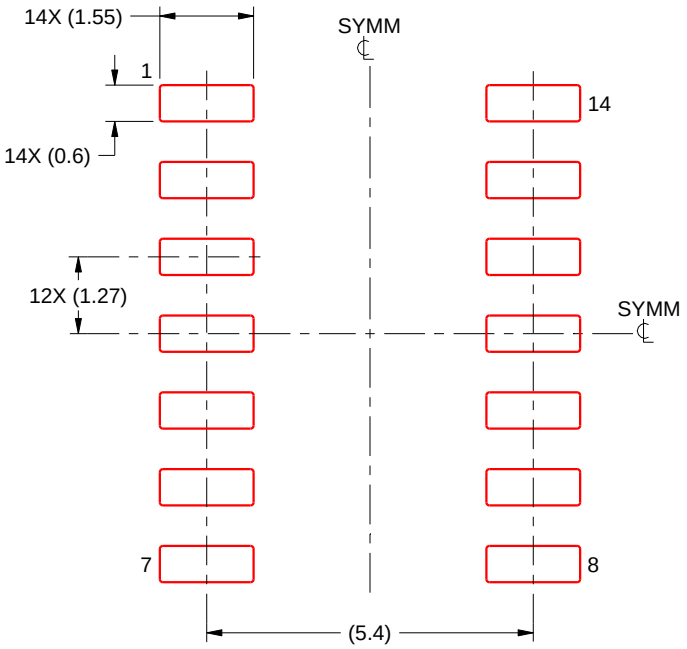

SOLDER PASTE EXAMPLE
BASED ON 0.125 mm THICK STENCIL
SCALE:8X

4220718/A 09/2016

NOTES: (continued)

8. Laser cutting apertures with trapezoidal walls and rounded corners may offer better paste release. IPC-7525 may have alternate design recommendations.
9. Board assembly site may have different recommendations for stencil design.

MECHANICAL DATA

NS (R-PDSO-G)** **PLASTIC SMALL-OUTLINE PACKAGE**

14-PINS SHOWN

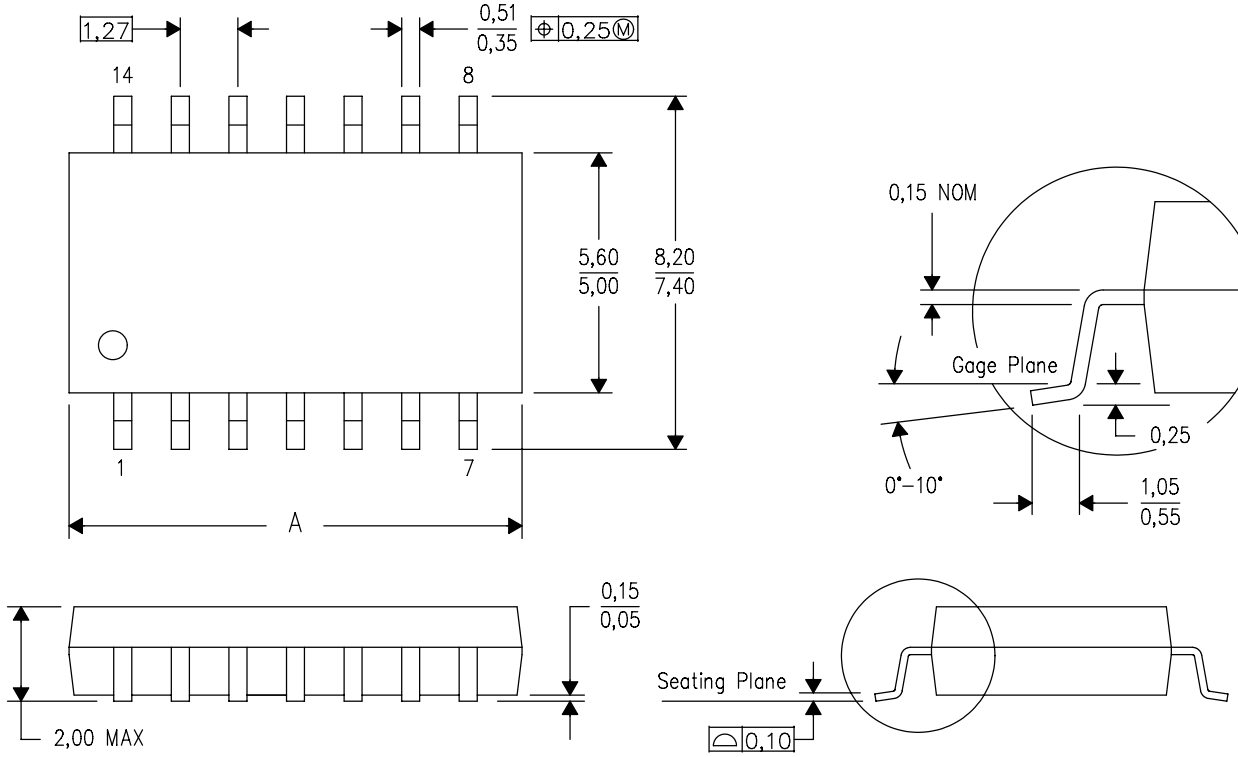

DIM \ PINS **	14	16	20	24
A MAX	10,50	10,50	12,90	15,30
A MIN	9,90	9,90	12,30	14,70

4040062/C 03/03

NOTES:
A. All linear dimensions are in millimeters.
B. This drawing is subject to change without notice.
C. Body dimensions do not include mold flash or protrusion, not to exceed 0,15.

IMPORTANT NOTICE AND DISCLAIMER

TI PROVIDES TECHNICAL AND RELIABILITY DATA (INCLUDING DATASHEETS), DESIGN RESOURCES (INCLUDING REFERENCE DESIGNS), APPLICATION OR OTHER DESIGN ADVICE, WEB TOOLS, SAFETY INFORMATION, AND OTHER RESOURCES “AS IS” AND WITH ALL FAULTS, AND DISCLAIMS ALL WARRANTIES, EXPRESS AND IMPLIED, INCLUDING WITHOUT LIMITATION ANY IMPLIED WARRANTIES OF MERCHANTABILITY, FITNESS FOR A PARTICULAR PURPOSE OR NON-INFRINGEMENT OF THIRD PARTY INTELLECTUAL PROPERTY RIGHTS.

These resources are intended for skilled developers designing with TI products. You are solely responsible for (1) selecting the appropriate TI products for your application, (2) designing, validating and testing your application, and (3) ensuring your application meets applicable standards, and any other safety, security, regulatory or other requirements.

These resources are subject to change without notice. TI grants you permission to use these resources only for development of an application that uses the TI products described in the resource. Other reproduction and display of these resources is prohibited. No license is granted to any other TI intellectual property right or to any third party intellectual property right. TI disclaims responsibility for, and you fully indemnify TI and its representatives against any claims, damages, costs, losses, and liabilities arising out of your use of these resources.

TI’s products are provided subject to TI’s Terms of Sale, TI’s General Quality Guidelines, or other applicable terms available either on ti.com or provided in conjunction with such TI products. TI’s provision of these resources does not expand or otherwise alter TI’s applicable warranties or warranty disclaimers for TI products. Unless TI explicitly designates a product as custom or customer-specified, TI products are standard, catalog, general purpose devices.

TI objects to and rejects any additional or different terms you may propose.

Copyright © 2026, Texas Instruments Incorporated

Last updated 10/2025