SN74LV4051A 8-Channel Analog Multiplexers and Demultiplexers

1 Features

- 1.65V to 5.5V V_{CC} operation
- Support mixed-mode voltage operation on all ports
- High on-off output-voltage ratio
- Low crosstalk between switches
- Individual switch controls
- Extremely low input current
- Latch-up performance exceeds 100mA per JESD 78, class II
- ESD protection exceeds JESD 22
  - 2000V human-body model (A114-A)
  - 200V machine model (A115-A)
  - 1000V charged-device model (C101)

2 Applications

- Telecommunications
- eCall
- Infotainment

3 Description

The SN74LV4051A 8-channel CMOS analog multiplexers and demultiplexers are designed for 1.65V to 5.5V V_{CC} operation.

The SN74LV4051A devices handle both analog and digital signals. Each channel permits signals with amplitudes up to 5.5V (peak) to be transmitted in either direction.

Applications include: signal gating, chopping, modulation or demodulation (modem), and signal multiplexing for analog-to-digital and digital-to-analog conversion systems.

Package Information

PART NUMBER	PACKAGE(1)	PACKAGE SIZE(2)
SN74LV4051A	PW (TSSOP, 16)	5mm × 6.4mm
	D (SOIC, 16)	9.9mm × 6mm
	RGY (VQFN, 16)	4mm × 3.5mm
	DYY (SOT-23-THIN, 16)	4.2mm x 3.26mm

(1) For more information, see Section 10.
(2) The package size (length × width) is a nominal value and includes pins, where applicable.

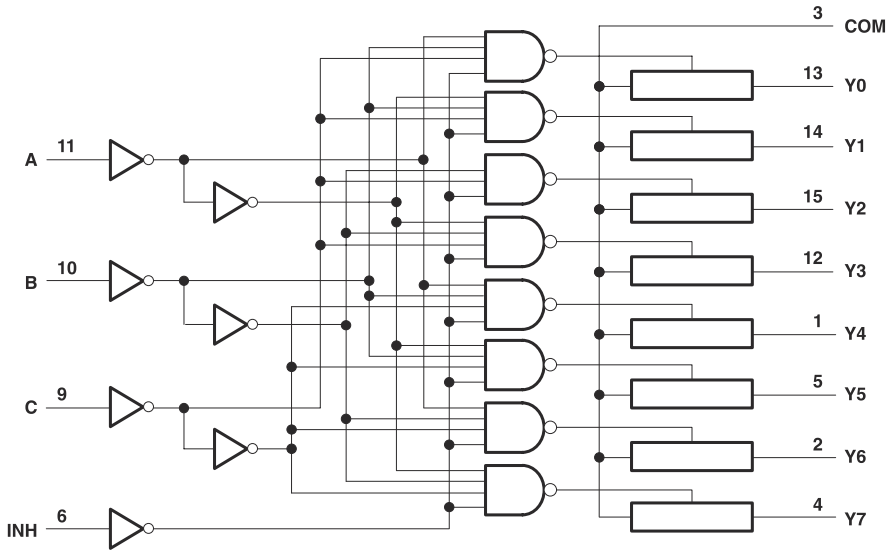

Logic Diagram (Positive Logic)

An IMPORTANT NOTICE at the end of this data sheet addresses availability, warranty, changes, use in safety-critical applications, intellectual property matters and other important disclaimers. PRODUCTION DATA.

Table of Contents

1 Features....1
2 Applications....1
3 Description....1
4 Pin Configuration and Functions....3
5 Specifications....4
5.1 Absolute Maximum Ratings....4
5.2 ESD Ratings....4
5.3 Thermal Information: SN74LV4051A....5
5.4 Recommended Operating Conditions....6
5.5 Electrical Characteristics....6
5.6 Timing Characteristics V_{CC} = 2.5 V ± 0.2 V....8
5.7 Timing Characteristics V_{CC} = 3.3 V ± 0.3 V....8
5.8 Timing Characteristics V_{CC} = 5 V ± 0.5 V....9
5.9 AC Characteristics....9
5.10 Typical Characteristics....11
6 Parameter Measurement Information....12
7 Detailed Description....15
7.1 Overview....15
7.2 Functional Block Diagram....15
7.3 Feature Description....15
7.4 Device Functional Modes....15
8 Device and Documentation Support....16
8.1 Documentation Support....16
8.2 Receiving Notification of Documentation Updates....16
8.3 Support Resources....16
8.4 Trademarks....16
8.5 Electrostatic Discharge Caution....16
8.6 Glossary....16
9 Revision History....16
10 Mechanical, Packaging, and Orderable Information....17

Copyright © 2024 Texas Instruments Incorporated

4 Pin Configuration and Functions

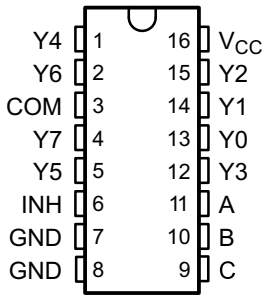

Figure 4-1. D, PW, or DYY Packages, 16-Pin SOIC, TSSOP, or SOT-23-THIN (Top View)

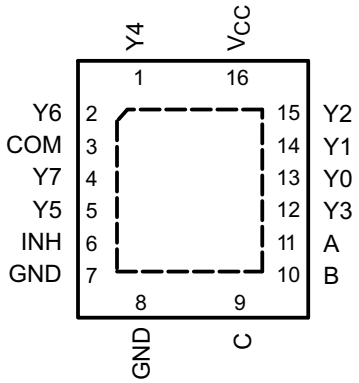

Figure 4-2. RGY Package 16-Pin VQFN With Exposed Thermal Pad (Top View)

Table 4-1. Pin Functions

PIN		TYPE(2)	DESCRIPTION
NAME	NO.		
A	11	I	Selector line A for outputs (see *Section 7.4* for specific information)
B	10	I	Selector line B for outputs (see *Section 7.4* for specific information)
C	9	I	Selector line C for outputs (see *Section 7.4* for specific information)
COM	3	O/I(1)	Output/Input of mux
GND	7, 8	—	Ground
INH	6	I(1)	Enables the outputs of the device. Logic low level with turn the outputs on, high level will turn them off.
Y0	13	I/O(1)	Input/Output to mux
Y1	14	I/O(1)	Input/Output to mux
Y2	15	I/O(1)	Input/Output to mux
Y3	12	I/O(1)	Input/Output to mux
Y4	1	I/O(1)	Input/Output of mux
Y5	5	I/O(1)	Input/Output to mux
Y6	2	I/O(1)	Input/Output to mux
Y7	4	I/O(1)	Input/Output to mux
V_{CC}	16	—	Device power

(1) These I/O descriptions represent the device when used as a multiplexer, when this device is operated as a demultiplexer pins Y0-Y7 may be considered outputs (O) and the COM pin may be considered inputs (I).
(2) I = inputs, O = outputs

Copyright © 2024 Texas Instruments Incorporated

5 Specifications

5.1 Absolute Maximum Ratings

over operating free-air temperature range (unless otherwise noted)[(1) (3)]

			MIN	MAX	UNIT
V_{CC}	Supply voltage		–0.5	7.0	V
V_I	Logic input voltage range		–0.5	7.0	V
V_{IO}	Switch I/O voltage range[(2) (3)]		–0.5	V_{CC} + 0.5	V
I_{IK}	Input clamp current	$V_I < 0$	–20		mA
I_{IOK}	Switch IO diode clamp current	$V_{IO} < 0$ or $V_{IO} > V_{CC}$	–50	50	mA
I_T	Switch continuous current	V_{IO} = 0 to V_{CC}		±25	mA
	Continuous current through V_{CC} or GND			±50	mA
T_J	Junction temperature			150	°C
T_{stg}	Storage temperature		–65	150	°C

(1) Operation outside the *Absolute Maximum Ratings* may cause permanent device damage. Absolute maximum ratings do not imply functional operation of the device at these or any other conditions beyond those listed under *Recommended Operating Conditions*. If briefly operating outside the *Recommended Operating Conditions* but within the *Absolute Maximum Ratings*, the device may not sustain damage, but it may not be fully functional. Operating the device in this manner may affect device reliability, functionality, performance, and shorten the device lifetime.
(2) Pins are diode-clamped to the power-supply rails. Over voltage signals must be voltage and current limited to maximum ratings.
(3) This value is limited to 5.5 V maximum

5.2 ESD Ratings

				VALUE	UNIT
$V_{(ESD)}$	Electrostatic discharge	Human body model (HBM), per AEC Q100-002[(1)]	All pins	±2000	V
		Charged device model (CDM), per AEC Q100-011	All pins	±1000	

(1) AEC Q100-002 indicates that HBM stressing shall be in accordance with the ANSI/ESDA/JEDEC JS-001 specification.

Copyright © 2024 Texas Instruments Incorporated

5.3 Thermal Information: SN74LV4051A

THERMAL METRIC[1]		SN74LV4051A D (SOIC) 16 PINS	SN74LV4051A PW (TSSOP) 16 PINS	SN74LV4051A RGY (VQFN) 16 PINS	SN74LV4051A DYY (SOT) 16 PINS	UNIT
$R_{\theta JA}$	Junction-to-ambient thermal resistance	115.2	140.2	89.4	199.7	°C/W
$R_{\theta JC(top)}$	Junction-to-case (top) thermal resistance	75.0	72.6	89.7	121.2	°C/W
$R_{\theta JB}$	Junction-to-board thermal resistance	76.6	98.7	65.4	129	°C/W
Ψ_{JT}	Junction-to-top characterization parameter	31.3	13.4	25.0	24.6	°C/W
Ψ_{JB}	Junction-to-board characterization parameter	75.7	97.3	65.2	126.7	°C/W
$R_{\theta JC(bot)}$	Junction-to-case (bottom) thermal resistance	N/A	N/A	48.9	N/A	°C/W

(1) For more information about traditional and new thermal metrics, see the Semiconductor and IC Package Thermal Metrics application report.

5.4 Recommended Operating Conditions

over operating free-air temperature range (unless otherwise noted)[1]

			MIN	NOM	MAX	UNIT
V_{CC}	Supply voltage		1[2]		5.5	V
V_{IH}	High-level input voltage, logic control inputs	V_{CC} = 1.65	1.2		5.5	V
		V_{CC} = 2 V	1.5		5.5	
		V_{CC} = 2.3 V to 2.7 V	V_{CC} x 0.7		5.5	
		V_{CC} = 3 V to 3.6 V	V_{CC} x 0.7		5.5	
		V_{CC} = 4.5 V to 5.5 V	V_{CC} x 0.7		5.5	
V_{IL}	Low-level input voltage, logic control inputs	V_{CC} = 1.65	0		0.4	V
		V_{CC} = 2 V	0		0.5	
		V_{CC} = 2.3 V to 2.7 V	0		V_{CC} x 0.3	
		V_{CC} = 3 V to 3.6 V	0		V_{CC} x 0.3	
		V_{CC} = 4.5 V to 5.5 V	0		V_{CC} x 0.3	
V_I	Logic control input voltage		0		5.5	V
V_{IO}	Switch input or output voltage		0		V_{CC}	V
Δt/ΔV	Logic input transition rise or fall rate	V_{CC} = 2.3 V to 2.7 V			200	ns/V
		V_{CC} = 3 V to 3.6 V			100	
		V_{CC} = 4.5 V to 5.5 V			20	
T_A	Ambient temperature		–40		125	°C

(1) All unused inputs of the device must be held at V_{CC} or GND to ensure proper device operation. Refer to TI application report *Implications of Slow or Floating CMOS Inputs*, SCBA004.
(2) When using a V_{CC} of ≤1.2 V, it is recommended to use these devices only for transmitting digital signals. When supply voltage is near 1.2 V the analog switch ON resistance becomes very non-linear

5.5 Electrical Characteristics

over recommended operating free-air temperature range (unless otherwise noted)

PARAMETER		Condition	T_A	V_{CC}	MIN	TYP	MAX	UNIT
r_{ON}	ON-state switch resistance	I_T = 2 mA, V_I = V_{CC} or GND, V_{INH} = V_{IL}	25°C	1.65 V		60	150	Ω
r_{ON}	ON-state switch resistance	I_T = 2 mA, V_I = V_{CC} or GND, V_{INH} = V_{IL}	–40°C to 85°C	1.65 V			225	Ω
r_{ON}	ON-state switch resistance	I_T = 2 mA, V_I = V_{CC} or GND, V_{INH} = V_{IL}	–40°C to 125°C	1.65 V			225	Ω
r_{ON}	ON-state switch resistance	I_T = 2 mA, V_I = V_{CC} or GND, V_{INH} = V_{IL}	25°C	2.3 V		38	180	Ω
			–40°C to 85°C				225	
			–40°C to 125°C				225	
			25°C	3 V		30	150	
			–40°C to 85°C				190	
			–40°C to 125°C				190	
			25°C	4.5 V		22	75	
			–40°C to 85°C				100	
			–40°C to 125°C				100	
$r_{ON(p)}$	Peak ON-state resistance	I_T = 2 mA, V_I = GND to V_{CC}, V_{INH} = V_{IL}	25°C	1.65 V		220	600	Ω

Copyright © 2024 Texas Instruments Incorporated

5.5 Electrical Characteristics (continued)

over recommended operating free-air temperature range (unless otherwise noted)

PARAMETER		Condition	T_A	V_{CC}	MIN	TYP	MAX	UNIT
$r_{ON(p)}$	Peak ON-state resistance	I_T = 2 mA, V_I = GND to V_{CC}, V_{INH} = V_{IL}	–40°C to 85°C	1.65 V			700	Ω
$r_{ON(p)}$	Peak ON-state resistance	I_T = 2 mA, V_I = GND to V_{CC}, V_{INH} = V_{IL}	–40°C to 125°C	1.65 V			700	Ω
$r_{ON(p)}$	Peak ON-state resistance	I_T = 2 mA, V_I = GND to V_{CC}, V_{INH} = V_{IL}	25°C	2.3 V		113	500	Ω
			–40°C to 85°C				600	
			–40°C to 125°C				600	
			25°C	3 V		54	180	Ω
			–40°C to 85°C				225	
			–40°C to 125°C				225	
			25°C	4.5 V		31	100	Ω
			–40°C to 85°C				125	
			–40°C to 125°C				125	
Δr_{ON}	Difference in ON-state resistance between switches	I_T = 2 mA, V_I = GND to V_{CC}, V_{INH} = V_{IL}	25°C	1.65 V		3	40	Ω
Δr_{ON}	Difference in ON-state resistance between switches	I_T = 2 mA, V_I = GND to V_{CC}, V_{INH} = V_{IL}	–40°C to 85°C	1.65 V			50	Ω
Δr_{ON}	Difference in ON-state resistance between switches	I_T = 2 mA, V_I = GND to V_{CC}, V_{INH} = V_{IL}	–40°C to 85°C	1.65 V			50	Ω
Δr_{ON}	Difference in ON-state resistance between switches	I_T = 2 mA, V_I = GND to V_{CC}, V_{INH} = V_{IL}	25°C	2.3 V		2.1	30	Ω
			–40°C to 85°C				40	
			–40°C to 125°C				40	
			25°C	3 V		1.4	20	Ω
			–40°C to 85°C				30	
			–40°C to 125°C				30	
			25°C	4.5 V		1.3	15	Ω
			–40°C to 85°C				20	
			–40°C to 125°C				20	
I_{IH} I_{IL}	Control input current	V_I = 5.5 V or GND	25°C	0 to 5.5 V			0.1	μA
			–40°C to 85°C				1	
			–40°C to 125°C				2	
$I_{S(off)}$	OFF-state switch leakage current	V_I = V_{CC} and V_O = GND, or V_I = GND and V_O = V_{CC}, V_{INH} = V_{IH}	25°C	5.5 V			0.1	μA
			–40°C to 85°C				1	
			–40°C to 125°C				2	
$I_{S(on)}$	ON-state switch leakage current	V_I = V_{CC} or GND, V_{INH} = V_{IL} (see Figure4)	25°C	5.5 V			0.1	μA
			–40°C to 85°C				1	
			–40°C to 125°C				2	
I_{CC}	Supply current	V_I = V_{CC} or GND V_{INH} = 0 V	25°C	5.5 V		0.01		μA
			–40°C to 85°C				20	
			–40°C to 125°C				40	
C_{IC}	Control input capacitance	f = 10 MHz	25°C	3.3 V		2		pF

Copyright © 2024 Texas Instruments Incorporated

5.5 Electrical Characteristics (continued)

over recommended operating free-air temperature range (unless otherwise noted)

PARAMETER		Condition	T_A	V_{CC}	MIN	TYP	MAX	UNIT
C_{OS}	Switch terminal capacitance	f = 10 MHz	25°C	3.3 V		5		pF
C_{IS}	Common ternminal capacitance	f = 10 MHz	25°C	3.3 V		23		pF
$C_{OS(on)}$	Common ternminal ON-capacitance	f = 10 MHz	25°C	3.3 V		23		pF
C_F	Feedthrough capacitance	f = 10 MHz	25°C	3.3 V		0.5		pF
C_{PD}	Power dissipation capacitance	C_L = 50 pF, f = 10 MHz	25°C	3.3 V		6		pF

5.6 Timing Characteristics V_{CC} = 2.5 V ± 0.2 V

PARAMETER		FROM (INPUT)	TO (OUTPUT)	CONDITIONS	T_A	MIN	TYP	MAX	UNIT
t_{PLH} t_{PHL}	Propagation delay time	COM or Yn	Yn or COM	C_L = 15 pF	25°C		1.9	10	ns
					–40°C to 85°C			16	
					–40°C to 125°C			18	
t_{PZH} t_{PZL}	Enable delay time	INH	COM or Yn	C_L = 15 pF	25°C		6.6	18	ns
					–40°C to 85°C			23	
					–40°C to 125°C			25	
t_{PHZ} t_{PLZ}	Disable delay time	INH	COM or Yn	C_L = 15 pF	25°C		7.4	18	ns
					–40°C to 85°C			23	
					–40°C to 125°C			25	
t_{PLH} t_{PHL}	Propagation delay time	COM or Yn	Yn or COM	C_L = 50 pF	25°C		3.8	12	ns
					–40°C to 85°C			18	
					–40°C to 125°C			20	
t_{PZH} t_{PZL}	Enable delay time	INH	COM or Yn	C_L = 50 pF	25°C		7.8	28	ns
					–40°C to 85°C			35	
					–40°C to 125°C			35	
t_{PHZ} t_{PLZ}	Disable delay time	INH	COM or Yn	C_L = 50 pF	25°C		11.5	28	ns
					–40°C to 85°C			35	
					–40°C to 125°C			35	

5.7 Timing Characteristics V_{CC} = 3.3 V ± 0.3 V

PARAMETER		FROM (INPUT)	TO (OUTPUT)	CONDITIONS	T_A	MIN	TYP	MAX	UNIT
t_{PLH} t_{PHL}	Propagation delay time	COM or Yn	Yn or COM	C_L = 15 pF	25°C		1.2	6	ns
					–40°C to 85°C			10	
					–40°C to 125°C			12	
t_{PZH} t_{PZL}	Enable delay time	INH	COM or Yn	C_L = 15 pF	25°C		4.7	12	ns
					–40°C to 85°C			15	
					–40°C to 125°C			18	
t_{PHZ} t_{PLZ}	Disable delay time	INH	COM or Yn	C_L = 15 pF	25°C		5.7	12	ns
					–40°C to 85°C			15	
					–40°C to 125°C			18	

Copyright © 2024 Texas Instruments Incorporated

5.7 Timing Characteristics V_{CC} = 3.3 V ± 0.3 V (continued)

PARAMETER		FROM (INPUT)	TO (OUTPUT)	CONDITIONS	T_A	MIN	TYP	MAX	UNIT
t_{PLH} t_{PHL}	Propagation delay time	COM or Yn	Yn or COM	C_L = 50 pF	25°C		2.5	9	ns
					–40°C to 85°C			12	
					–40°C to 125°C			14	
t_{PZH} t_{PZL}	Enable delay time	INH	COM or Yn	C_L = 50 pF	25°C		5.5	20	ns
					–40°C to 85°C			25	
					–40°C to 125°C			25	
t_{PHZ} t_{PLZ}	Disable delay time	INH	COM or Yn	C_L = 50 pF	25°C		8.8	20	ns
					–40°C to 85°C			25	
					–40°C to 125°C			25	

5.8 Timing Characteristics V_{CC} = 5 V ± 0.5 V

PARAMETER		FROM (INPUT)	TO (OUTPUT)	CONDITIONS	T_A	MIN	TYP	MAX	UNIT
t_{PLH} t_{PHL}	Propagation delay time	COM or Yn	Yn or COM	C_L = 15 pF	25°C		0.6	4	ns
					–40°C to 85°C			7	
					–40°C to 125°C			10	
t_{PZH} t_{PZL}	Enable delay time	INH	COM or Yn	C_L = 15 pF	25°C		3.5	8	ns
					–40°C to 85°C			10	
					–40°C to 125°C			12	
t_{PHZ} t_{PLZ}	Disable delay time	INH	COM or Yn	C_L = 15 pF	25°C		4.4	10	ns
					–40°C to 85°C			11	
					–40°C to 125°C			12	
t_{PLH} t_{PHL}	Propagation delay time	COM or Yn	Yn or COM	C_L = 50 pF	25°C		1.5	6	ns
					–40°C to 85°C			8	
					–40°C to 125°C			10	
t_{PZH} t_{PZL}	Enable delay time	INH	COM or Yn	C_L = 50 pF	25°C		4	14	ns
					–40°C to 85°C			18	
					–40°C to 125°C			18	
t_{PHZ} t_{PLZ}	Disable delay time	INH	COM or Yn	C_L = 50 pF	25°C		6.2	14	ns
					–40°C to 85°C			18	
					–40°C to 125°C			18	

5.9 AC Characteristics

PARAMETER	FROM (INPUT)	TO (OUTPUT)	Device	CONDITIONS		MIN	TYP	MAX	UNIT
Frequency response (switch on)	COM or Yn	Yn or COM	SN74LV4051	C_L = 50 pF, R_L = 600 Ω, F_{in} = 1 MHz (sine wave) (see Figure 7)(1)	V_{CC} = 2.3 V		20		MHz
					V_{CC} = 3 V		25		
					V_{CC} = 4.5 V		35		
Charge Injection (control input to signal output)	INH	COM or Yn		C_L = 50 pF, R_L = 600 Ω, F_{in} = 1 MHz (sine wave) (see Figure 9)	V_{CC} = 2.3 V		20		mV
					V_{CC} = 3 V		35		
					V_{CC} = 4.5 V		60		

Copyright © 2024 Texas Instruments Incorporated

5.9 AC Characteristics (continued)

PARAMETER	FROM (INPUT)	TO (OUTPUT)	Device	CONDITIONS		MIN	TYP	MAX	UNIT
Feedthrough attenuation (switch off)	COM or Yn	Yn or COM		C_L = 50 pF, R_L = 600 Ω, F_{in} = 1 MHz (sine wave) (see Figure 10) (2)	V_{CC} = 2.3 V		–45		dB
					V_{CC} = 3 V		–45		
					V_{CC} = 4.5 V		–45		
Crosstalk (between any switches)	COM or Yn	Yn or COM		C_L = 50 pF, R_L = 600 Ω, F_{in} = 1 MHz (sine wave) (see Figure 8)(2)	V_{CC} = 2.3 V		–45		dB
					V_{CC} = 3 V		–45		
					V_{CC} = 4.5 V		–45		
Sine-wave distortion	COM or Yn	Yn or COM		C_L = 50 pF, R_L = 10 kΩ, F_{in} = 1 kHz (sine wave) (see Figure 11)	V_I = 2 V_{p-p} V_{CC} = 2.3 V		0.1		%
					V_I = 2.5 V_{p-p} V_{CC} = 3 V		0.1		
					V_I = 4 V_{p-p} V_{CC} = 4.5 V		0.1		

Copyright © 2024 Texas Instruments Incorporated

5.10 Typical Characteristics

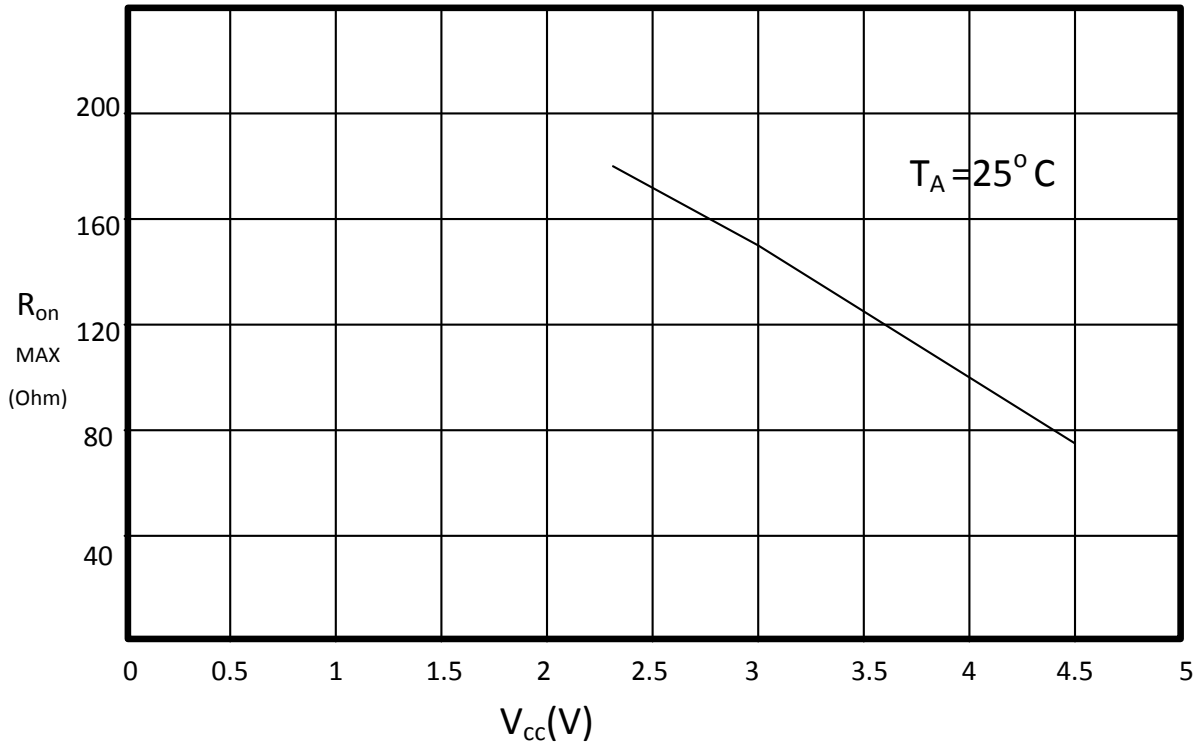

Figure 5-1. Plot at 25°C for V_{CC} vs Max R_{ON}

6 Parameter Measurement Information

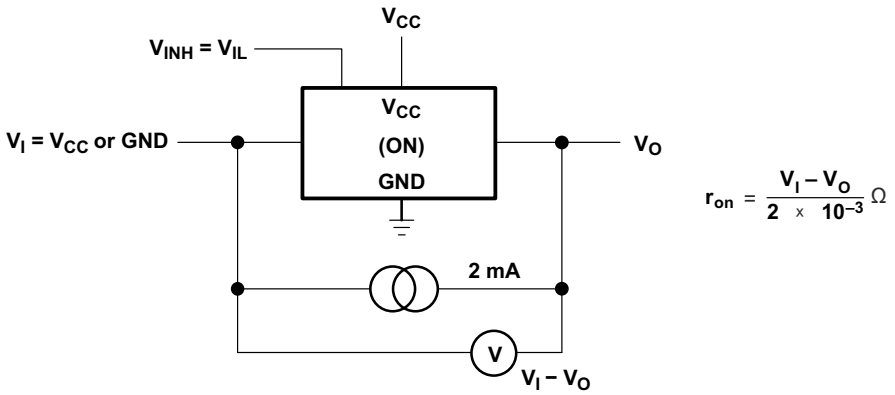

Figure 6-1. On-State Resistance Test Circuit

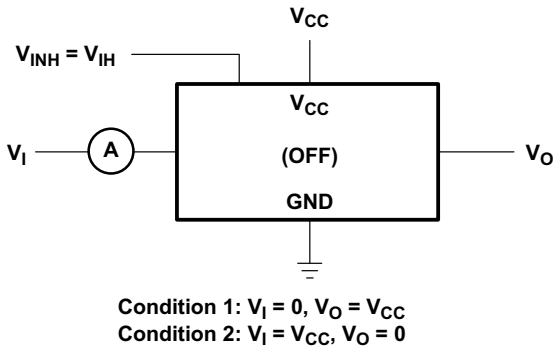

Figure 6-2. Off-State Switch Leakage-Current Test Circuit

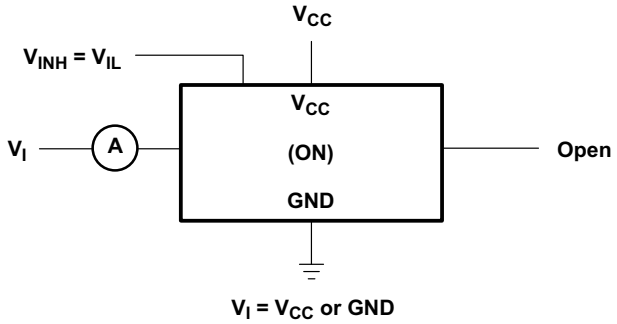

Figure 6-3. On-State Switch Leakage-Current Test Circuit

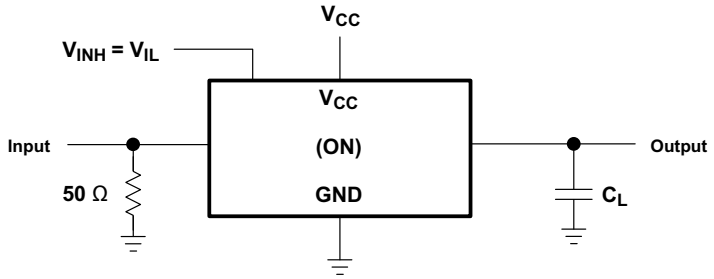

Figure 6-4. Propagation Delay Time, Signal Input to Signal Output

Copyright © 2024 Texas Instruments Incorporated

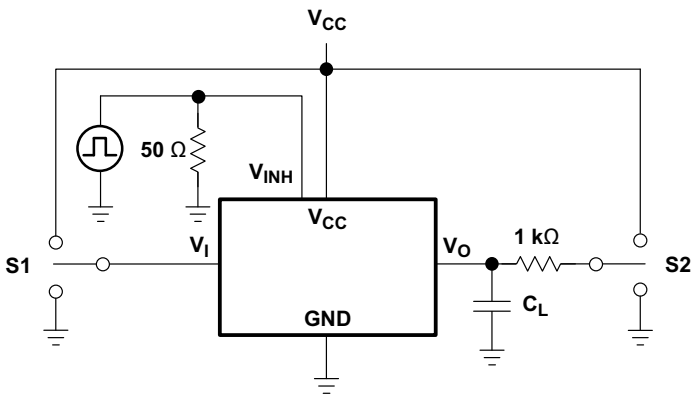

TEST	S1	S2
t_{PLZ}/t_{PZL} t_{PHZ}/t_{PZH}	GND V_{CC}	V_{CC} GND

TEST CIRCUIT

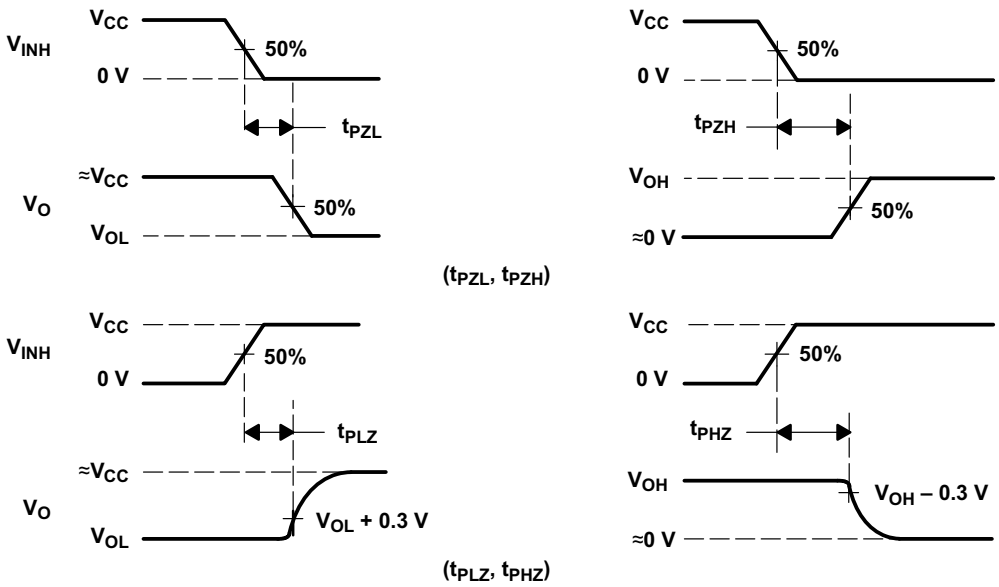

VOLTAGE WAVEFORMS

Figure 6-5. Switching Time (t_{PZL}, t_{PLZ}, t_{PZH}, t_{PHZ}), Control to Signal Output

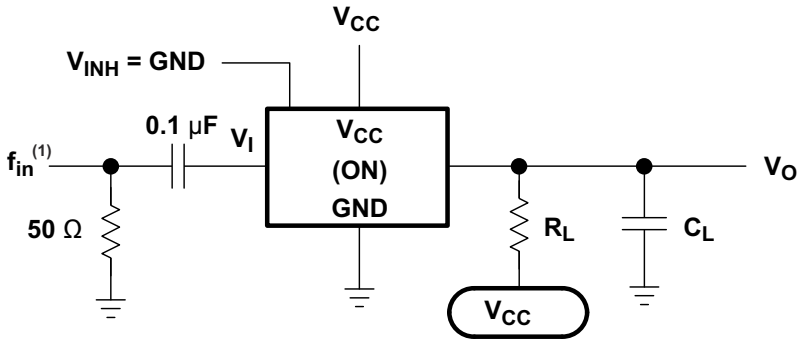

A. f_{in} is a sine wave.

Figure 6-6. Frequency Response (Switch On)

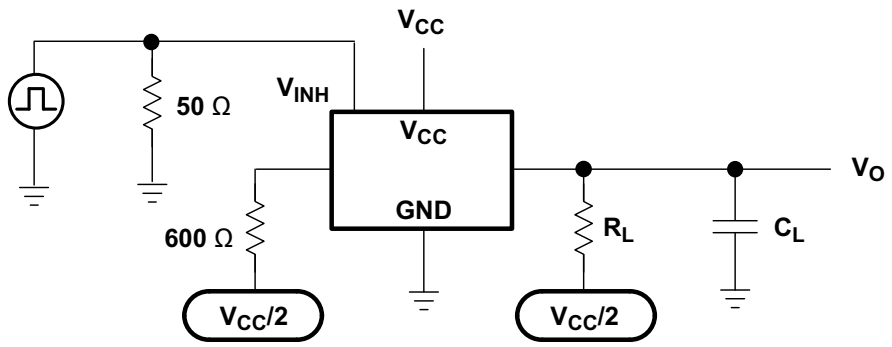

Figure 6-7. Crosstalk (Control Input, Switch Output)

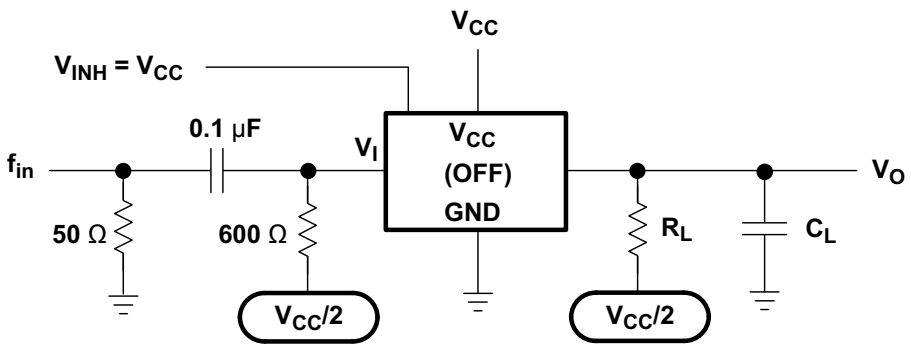

Figure 6-8. Feedthrough Attenuation (Switch Off)

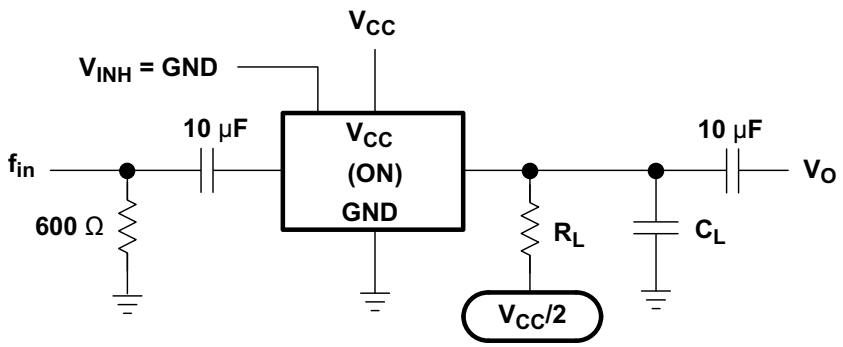

Figure 6-9. Sine-Wave Distortion

Copyright © 2024 Texas Instruments Incorporated

7 Detailed Description

7.1 Overview

The SN74LV4051A device is an 8-channel analog multiplexer. A multiplexer is used when several signals must share the same device or resource. This device allows for the selection of one of these signals at a time for analysis or propagation.

7.2 Functional Block Diagram

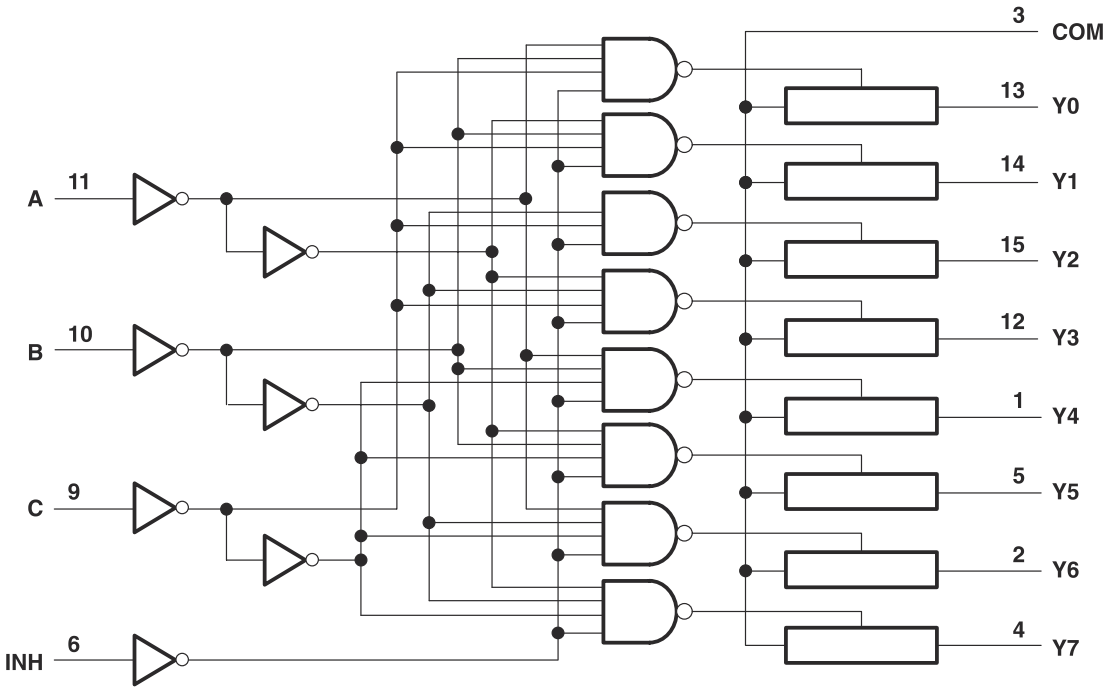

7.3 Feature Description

The SN74LV4051A device contains one 8-channel multiplexer for use in a variety of applications and can also be configured as demultiplexer by using the COM pin as an input and the Yn pins as outputs. This device is qualified to operate in the temperature range –40°C to +85°C (maximum depends on package type).

7.4 Device Functional Modes

Table 7-1. Function Table

INPUTS				ON CHANNEL
INH	C	B	A	
L	L	L	L	Y0
L	L	L	H	Y1
L	L	H	L	Y2
L	L	H	H	Y3
L	H	L	L	Y4
L	H	L	H	Y5
L	H	H	L	Y6
L	H	H	H	Y7
H	X	X	X	None

8 Device and Documentation Support

8.1 Documentation Support

8.1.1 Related Documentation

For related documentation, see the following:

- Texas Instruments, *Implications of Slow or Floating CMOS Inputs*

8.2 Receiving Notification of Documentation Updates

To receive notification of documentation updates, navigate to the device product folder on ti.com. Click on *Notifications* to register and receive a weekly digest of any product information that has changed. For change details, review the revision history included in any revised document.

8.3 Support Resources

TI E2E™ support forums are an engineer's go-to source for fast, verified answers and design help — straight from the experts. Search existing answers or ask your own question to get the quick design help you need.

Linked content is provided "AS IS" by the respective contributors. They do not constitute TI specifications and do not necessarily reflect TI's views; see TI's Terms of Use.

8.4 Trademarks

TI E2E™ is a trademark of Texas Instruments.
All trademarks are the property of their respective owners.

8.5 Electrostatic Discharge Caution

This integrated circuit can be damaged by ESD. Texas Instruments recommends that all integrated circuits be handled with appropriate precautions. Failure to observe proper handling and installation procedures can cause damage.

ESD damage can range from subtle performance degradation to complete device failure. Precision integrated circuits may be more susceptible to damage because very small parametric changes could cause the device not to meet its published specifications.

8.6 Glossary

TI Glossary	This glossary lists and explains terms, acronyms, and definitions.

9 Revision History

NOTE: Page numbers for previous revisions may differ from page numbers in the current version.

Changes from Revision J (June 2024) to Revision K (September 2024)	Page
• Added DYY package and size	1
• Added DYY package	3
• Added DYY package	5

Changes from Revision I (September 2015) to Revision J (June 2024)	Page
• Updated the numbering format for tables, figures, and cross-references throughout the document	1
• Added new VIH and VIL Specifications at 1.65V Vcc	6
• Increased max ambient temperature max to 125C	6
• Added Ron, Ron Peak, and Delta Ron Specifications at 1.65V Vcc	6
• Added Ron, Ron Peak, and Delta Ron Specifications at 125C	6
• Added Timing Specifications at 125C	8

Copyright © 2024 Texas Instruments Incorporated

Changes from Revision H (April 2005) to Revision I (September 2015) **Page**

- Added *Device Information* table, *Pin Functions* table, *ESD Ratings* table, *Thermal Information* table, *Detailed Description* section, *Applications and Implementation* section, *Power Supply Recommendations* section, *Layout* section, *Device and Documentation Support* section, and *Mechanical, Packaging, and Orderable Information* section..... 1
- Deleted SN54LV4051A part number from the data sheet 1
- Removed *Ordering Information* table..... 1

10 Mechanical, Packaging, and Orderable Information

The following pages include mechanical, packaging, and orderable information. This information is the most current data available for the designated devices. This data is subject to change without notice and revision of this document. For browser-based versions of this data sheet, refer to the left-hand navigation.

Copyright © 2024 Texas Instruments Incorporated

PACKAGING INFORMATION

Orderable part number	Status (1)	Material type (2)	Package | Pins	Package qty | Carrier	RoHS (3)	Lead finish/ Ball material (4)	MSL rating/ Peak reflow (5)	Op temp (°C)	Part marking (6)
SN74LV4051ADBR	NRND	Production	SSOP (DB) | 16	2000 | LARGE T&R	Yes	NIPDAU	Level-1-260C-UNLIM	-40 to 85	LW051A
SN74LV4051ADBR.A	NRND	Production	SSOP (DB) | 16	2000 | LARGE T&R	Yes	NIPDAU	Level-1-260C-UNLIM	-40 to 125	LW051A
SN74LV4051ADGVR	NRND	Production	TVSOP (DGV) | 16	2000 | LARGE T&R	Yes	NIPDAU	Level-1-260C-UNLIM	-40 to 85	LW051A
SN74LV4051ADGVR.A	NRND	Production	TVSOP (DGV) | 16	2000 | LARGE T&R	Yes	NIPDAU	Level-1-260C-UNLIM	-40 to 125	LW051A
SN74LV4051ADGVRG4	NRND	Production	TVSOP (DGV) | 16	2000 | LARGE T&R	Yes	NIPDAU	Level-1-260C-UNLIM	-40 to 85	LW051A
SN74LV4051ADR	Active	Production	SOIC (D) | 16	2500 | LARGE T&R	Yes	NIPDAU	Level-1-260C-UNLIM	-40 to 85	LV4051A
SN74LV4051ADR.A	Active	Production	SOIC (D) | 16	2500 | LARGE T&R	Yes	NIPDAU	Level-1-260C-UNLIM	-40 to 125	LV4051A
SN74LV4051ADYYR	Active	Production	SOT-23-THIN (DYY) | 16	3000 | LARGE T&R	Yes	NIPDAU	Level-1-260C-UNLIM	-40 to 85	LV4051
SN74LV4051ADYYR.A	Active	Production	SOT-23-THIN (DYY) | 16	3000 | LARGE T&R	Yes	NIPDAU	Level-1-260C-UNLIM	-40 to 125	LV4051
SN74LV4051AN	NRND	Production	PDIP (N) | 16	25 | TUBE	Yes	NIPDAU	N/A for Pkg Type	-40 to 85	SN74LV4051AN
SN74LV4051AN.A	NRND	Production	PDIP (N) | 16	25 | TUBE	Yes	NIPDAU	N/A for Pkg Type	-40 to 125	SN74LV4051AN
SN74LV4051ANS	NRND	Production	SOP (NS) | 16	50 | TUBE	Yes	NIPDAU	Level-1-260C-UNLIM	-40 to 85	74LV4051A
SN74LV4051ANS.A	NRND	Production	SOP (NS) | 16	50 | TUBE	Yes	NIPDAU	Level-1-260C-UNLIM	-40 to 125	74LV4051A
SN74LV4051ANSR	NRND	Production	SOP (NS) | 16	2000 | LARGE T&R	Yes	NIPDAU	Level-1-260C-UNLIM	-40 to 85	74LV4051A
SN74LV4051ANSR.A	NRND	Production	SOP (NS) | 16	2000 | LARGE T&R	Yes	NIPDAU	Level-1-260C-UNLIM	-40 to 125	74LV4051A
SN74LV4051APW	Obsolete	Production	TSSOP (PW) | 16	-	-	Call TI	Call TI	-40 to 85	LW051A
SN74LV4051APWR	Active	Production	TSSOP (PW) | 16	2000 | LARGE T&R	Yes	NIPDAU | SN	Level-1-260C-UNLIM	-40 to 85	LW051A
SN74LV4051APWR.A	Active	Production	TSSOP (PW) | 16	2000 | LARGE T&R	Yes	NIPDAU	Level-1-260C-UNLIM	-40 to 125	LW051A
SN74LV4051APWRG4	Obsolete	Production	TSSOP (PW) | 16	-	-	Call TI	Call TI	-40 to 85	LW051A
SN74LV4051ARGYR	Active	Production	VQFN (RGY) | 16	3000 | LARGE T&R	Yes	NIPDAU	Level-1-260C-UNLIM	-40 to 85	LW051A
SN74LV4051ARGYR.A	Active	Production	VQFN (RGY) | 16	3000 | LARGE T&R	Yes	NIPDAU	Level-1-260C-UNLIM	-40 to 125	LW051A

(1) **Status:** For more details on status, see our product life cycle.

(2) **Material type:** When designated, preproduction parts are prototypes/experimental devices, and are not yet approved or released for full production. Testing and final process, including without limitation quality assurance, reliability performance testing, and/or process qualification, may not yet be complete, and this item is subject to further changes or possible discontinuation. If available for ordering, purchases will be subject to an additional waiver at checkout, and are intended for early internal evaluation purposes only. These items are sold without warranties of any kind.

(3) **RoHS values:** Yes, No, RoHS Exempt. See the TI RoHS Statement for additional information and value definition.

(4) **Lead finish/Ball material:** Parts may have multiple material finish options. Finish options are separated by a vertical ruled line. Lead finish/Ball material values may wrap to two lines if the finish value exceeds the maximum column width.

(5) **MSL rating/Peak reflow:** The moisture sensitivity level ratings and peak solder (reflow) temperatures. In the event that a part has multiple moisture sensitivity ratings, only the lowest level per JEDEC standards is shown. Refer to the shipping label for the actual reflow temperature that will be used to mount the part to the printed circuit board.

(6) **Part marking:** There may be an additional marking, which relates to the logo, the lot trace code information, or the environmental category of the part.

Multiple part markings will be inside parentheses. Only one part marking contained in parentheses and separated by a "~" will appear on a part. If a line is indented then it is a continuation of the previous line and the two combined represent the entire part marking for that device.

Important Information and Disclaimer: The information provided on this page represents TI's knowledge and belief as of the date that it is provided. TI bases its knowledge and belief on information provided by third parties, and makes no representation or warranty as to the accuracy of such information. Efforts are underway to better integrate information from third parties. TI has taken and continues to take reasonable steps to provide representative and accurate information but may not have conducted destructive testing or chemical analysis on incoming materials and chemicals. TI and TI suppliers consider certain information to be proprietary, and thus CAS numbers and other limited information may not be available for release.

In no event shall TI's liability arising out of such information exceed the total purchase price of the TI part(s) at issue in this document sold by TI to Customer on an annual basis.

OTHER QUALIFIED VERSIONS OF SN74LV4051A :

- Automotive : SN74LV4051A-Q1
- Enhanced Product : SN74LV4051A-EP

NOTE: Qualified Version Definitions:

- Automotive - Q100 devices qualified for high-reliability automotive applications targeting zero defects
- Enhanced Product - Supports Defense, Aerospace and Medical Applications

TAPE AND REEL INFORMATION

REEL DIMENSIONS

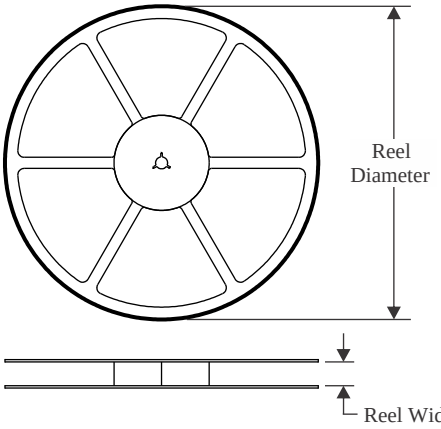

TAPE DIMENSIONS

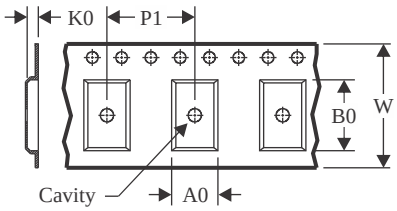

A0	Dimension designed to accommodate the component width
B0	Dimension designed to accommodate the component length
K0	Dimension designed to accommodate the component thickness
W	Overall width of the carrier tape
P1	Pitch between successive cavity centers

QUADRANT ASSIGNMENTS FOR PIN 1 ORIENTATION IN TAPE

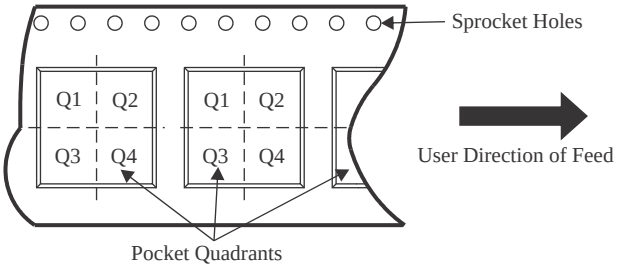

*All dimensions are nominal

Device	Package Type	Package Drawing	Pins	SPQ	Reel Diameter (mm)	Reel Width W1 (mm)	A0 (mm)	B0 (mm)	K0 (mm)	P1 (mm)	W (mm)	Pin1 Quadrant
SN74LV4051ADBR	SSOP	DB	16	2000	330.0	16.4	8.35	6.6	2.4	12.0	16.0	Q1
SN74LV4051ADGVR	TVSOP	DGV	16	2000	330.0	12.4	6.8	4.0	1.6	8.0	12.0	Q1
SN74LV4051ADR	SOIC	D	16	2500	330.0	16.4	6.5	10.3	2.1	8.0	16.0	Q1
SN74LV4051ADYYR	SOT-23-THIN	DYY	16	3000	330.0	12.4	4.8	3.6	1.6	8.0	12.0	Q3
SN74LV4051ANSR	SOP	NS	16	2000	330.0	16.4	8.1	10.4	2.5	12.0	16.0	Q1
SN74LV4051APWR	TSSOP	PW	16	2000	330.0	12.4	6.9	5.6	1.6	8.0	12.0	Q1
SN74LV4051APWR	TSSOP	PW	16	2000	330.0	12.4	6.9	5.3	1.6	8.0	12.0	Q1
SN74LV4051APWR	TSSOP	PW	16	2000	330.0	12.4	6.9	5.6	1.6	8.0	12.0	Q1
SN74LV4051ARGYR	VQFN	RGY	16	3000	330.0	12.4	3.8	4.3	1.5	8.0	12.0	Q1

TAPE AND REEL BOX DIMENSIONS

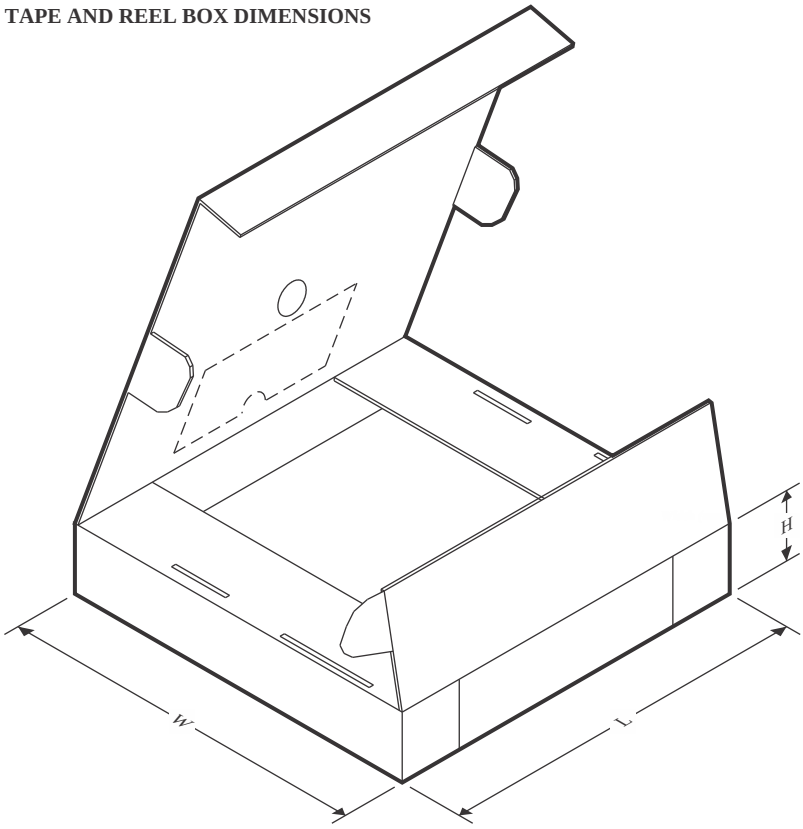

*All dimensions are nominal

Device	Package Type	Package Drawing	Pins	SPQ	Length (mm)	Width (mm)	Height (mm)
SN74LV4051ADBR	SSOP	DB	16	2000	353.0	353.0	32.0
SN74LV4051ADGVR	TVSOP	DGV	16	2000	353.0	353.0	32.0
SN74LV4051ADR	SOIC	D	16	2500	353.0	353.0	32.0
SN74LV4051ADYYR	SOT-23-THIN	DYY	16	3000	336.6	336.6	31.8
SN74LV4051ANSR	SOP	NS	16	2000	353.0	353.0	32.0
SN74LV4051APWR	TSSOP	PW	16	2000	356.0	356.0	35.0
SN74LV4051APWR	TSSOP	PW	16	2000	367.0	367.0	35.0
SN74LV4051APWR	TSSOP	PW	16	2000	353.0	353.0	32.0
SN74LV4051ARGYR	VQFN	RGY	16	3000	360.0	360.0	36.0

TUBE

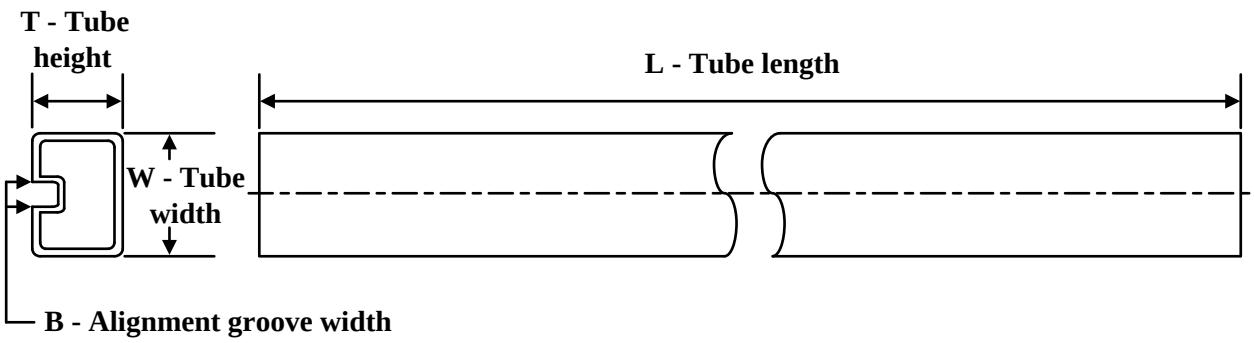

*All dimensions are nominal

Device	Package Name	Package Type	Pins	SPQ	L (mm)	W (mm)	T (µm)	B (mm)
SN74LV4051AN	N	PDIP	16	25	506	13.97	11230	4.32
SN74LV4051AN	N	PDIP	16	25	506	13.97	11230	4.32
SN74LV4051AN.A	N	PDIP	16	25	506	13.97	11230	4.32
SN74LV4051AN.A	N	PDIP	16	25	506	13.97	11230	4.32
SN74LV4051ANS	NS	SOP	16	50	530	10.5	4000	4.1
SN74LV4051ANS.A	NS	SOP	16	50	530	10.5	4000	4.1

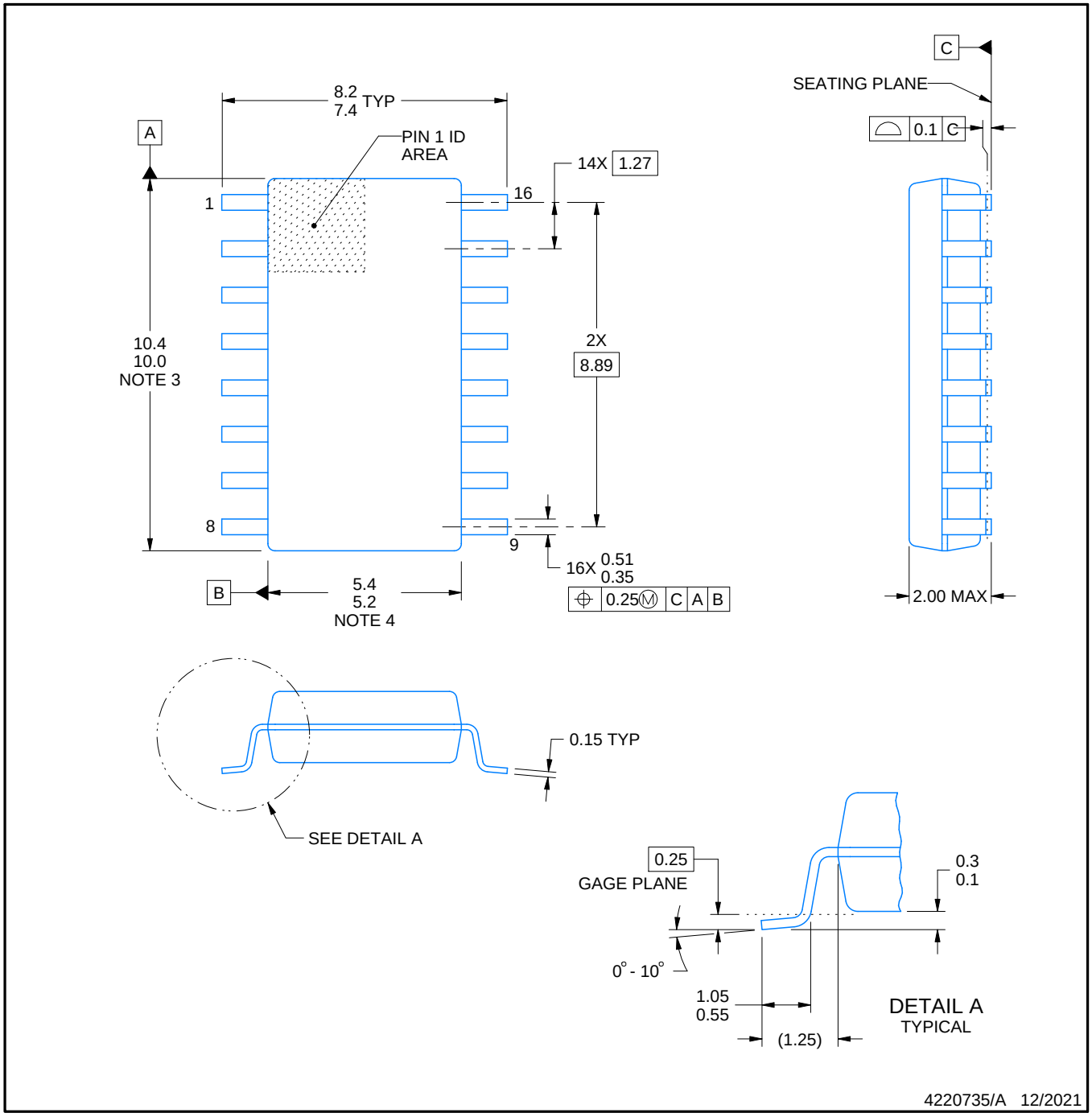

NOTES:

1. All linear dimensions are in millimeters. Dimensions in parenthesis are for reference only. Dimensioning and tolerancing per ASME Y14.5M.
2. This drawing is subject to change without notice.
3. This dimension does not include mold flash, protrusions, or gate burrs. Mold flash, protrusions, or gate burrs shall not exceed 0.15 mm, per side.
4. This dimension does not include interlead flash. Interlead flash shall not exceed 0.25 mm, per side.

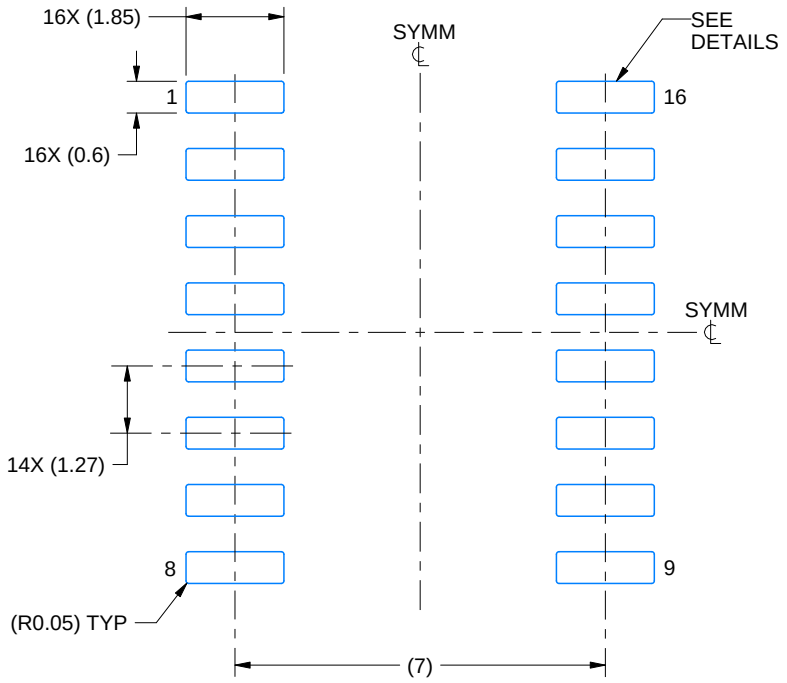

LAND PATTERN EXAMPLE
SCALE:7X

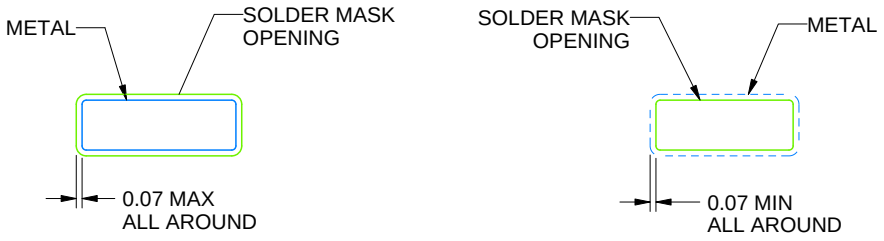

NON SOLDER MASK DEFINED

SOLDER MASK DEFINED

SOLDER MASK DETAILS

4220735/A 12/2021

NOTES: (continued)

5. Publication IPC-7351 may have alternate designs.
6. Solder mask tolerances between and around signal pads can vary based on board fabrication site.

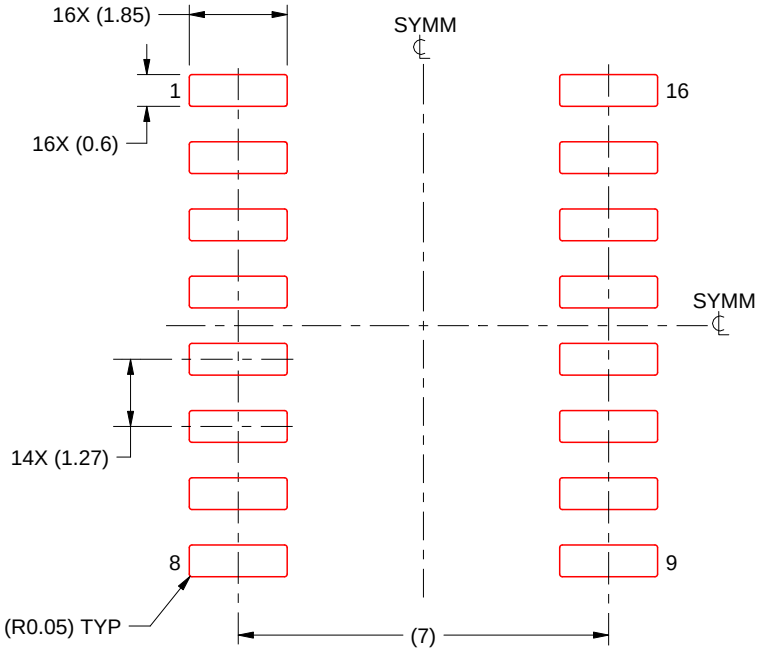

SOLDER PASTE EXAMPLE
BASED ON 0.125 mm THICK STENCIL
SCALE:7X

4220735/A 12/2021

NOTES: (continued)

7. Laser cutting apertures with trapezoidal walls and rounded corners may offer better paste release. IPC-7525 may have alternate design recommendations.
8. Board assembly site may have different recommendations for stencil design.

PLASTIC QUAD FLATPACK - NO LEAD

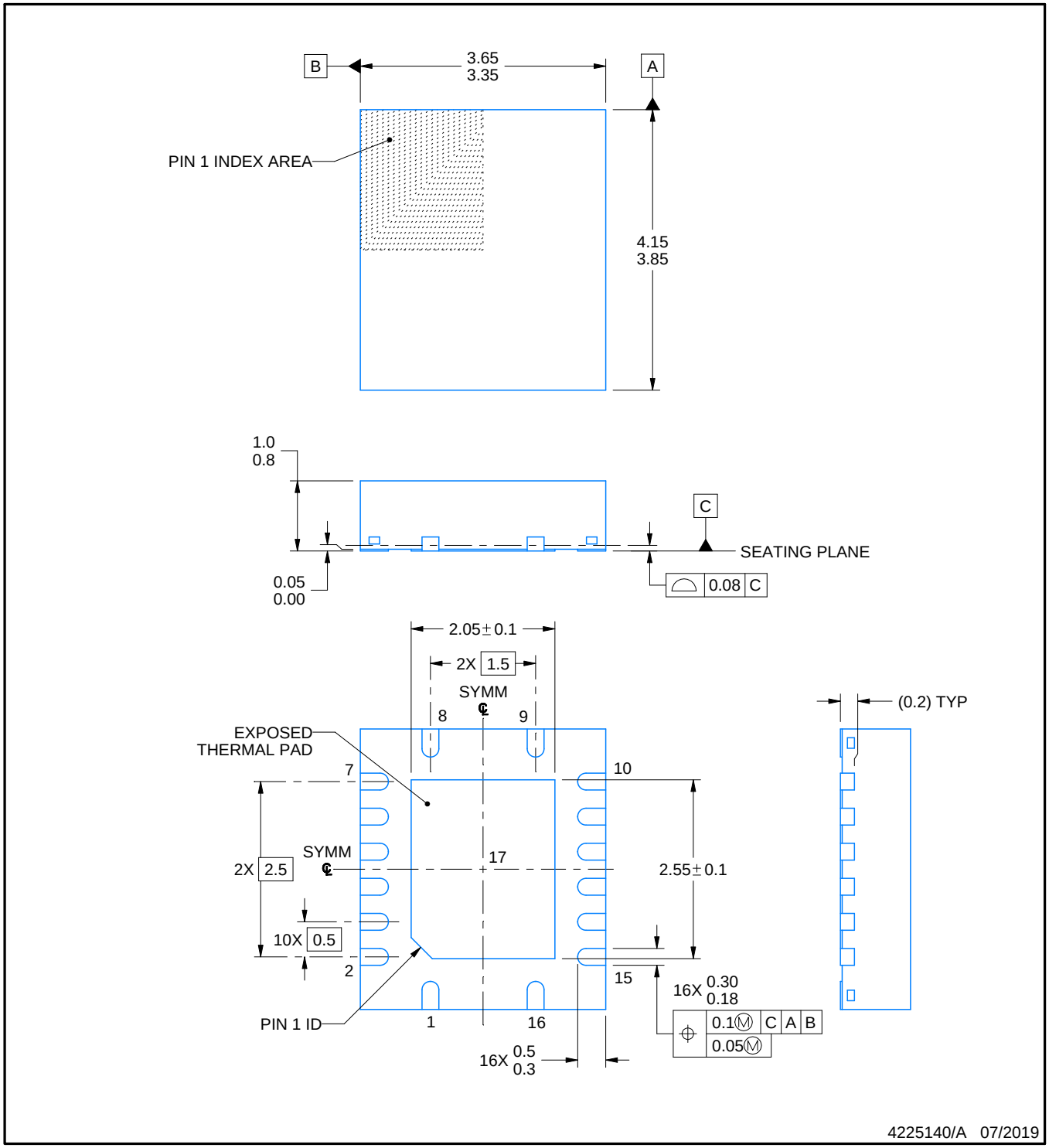

NOTES:

1. All linear dimensions are in millimeters. Any dimensions in parenthesis are for reference only. Dimensioning and tolerancing per ASME Y14.5M.
2. This drawing is subject to change without notice.
3. The package thermal pad must be soldered to the printed circuit board for thermal and mechanical performance.

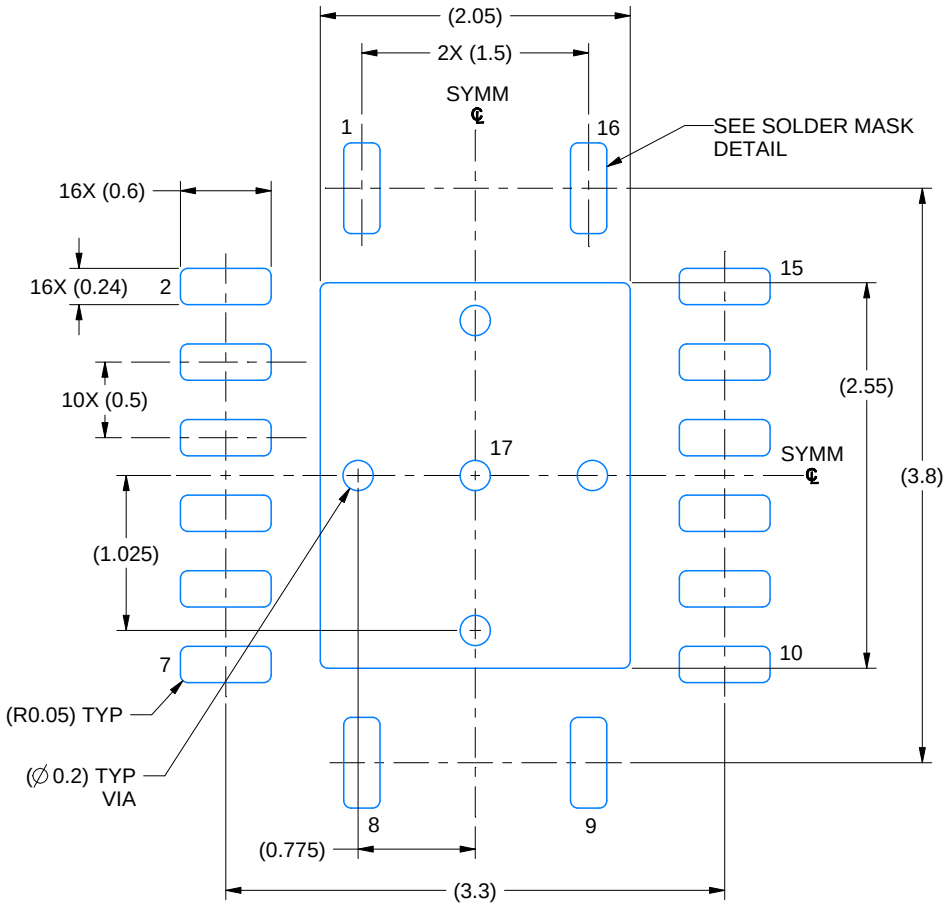

LAND PATTERN EXAMPLE
EXPOSED METAL SHOWN
SCALE: 20X

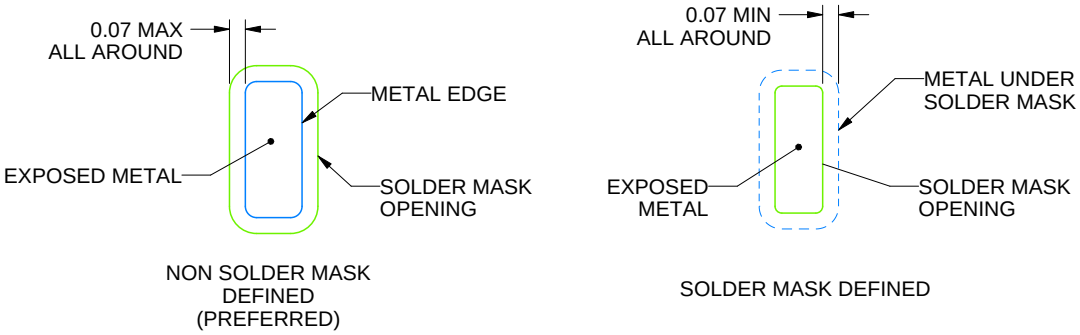

SOLDER MASK DETAILS

4225140/A 07/2019

NOTES: (continued)

4. This package is designed to be soldered to a thermal pad on the board. For more information, see Texas Instruments literature number SLUA271 (www.ti.com/lit/slua271).
5. Vias are optional depending on application, refer to device data sheet. If any vias are implemented, refer to their locations shown on this view. It is recommended that vias under paste be filled, plugged or tented.

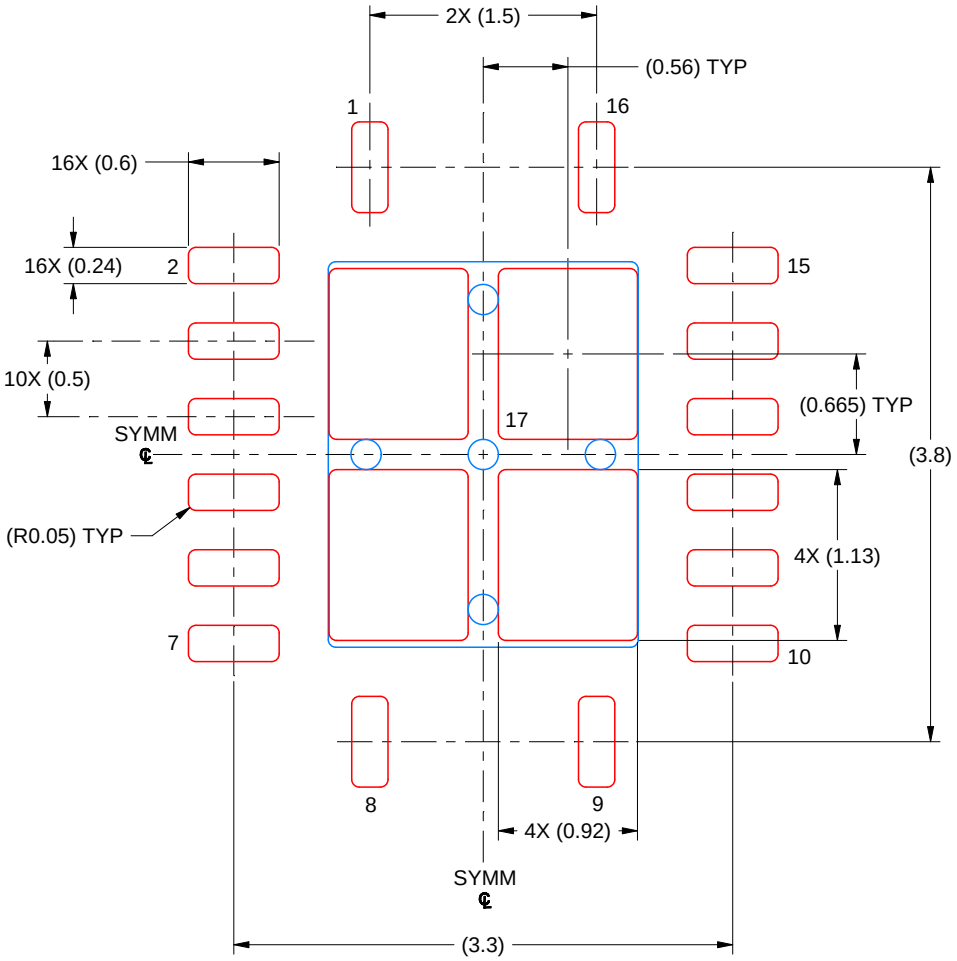

SOLDER PASTE EXAMPLE
BASED ON 0.125 MM THICK STENCIL
SCALE: 20X

EXPOSED PAD 17
80% PRINTED SOLDER COVERAGE BY AREA UNDER PACKAGE

4225140/A 07/2019

NOTES: (continued)

6. Laser cutting apertures with trapezoidal walls and rounded corners may offer better paste release. IPC-7525 may have alternate design recommendations.

D (R–PDSO–G16) PLASTIC SMALL OUTLINE

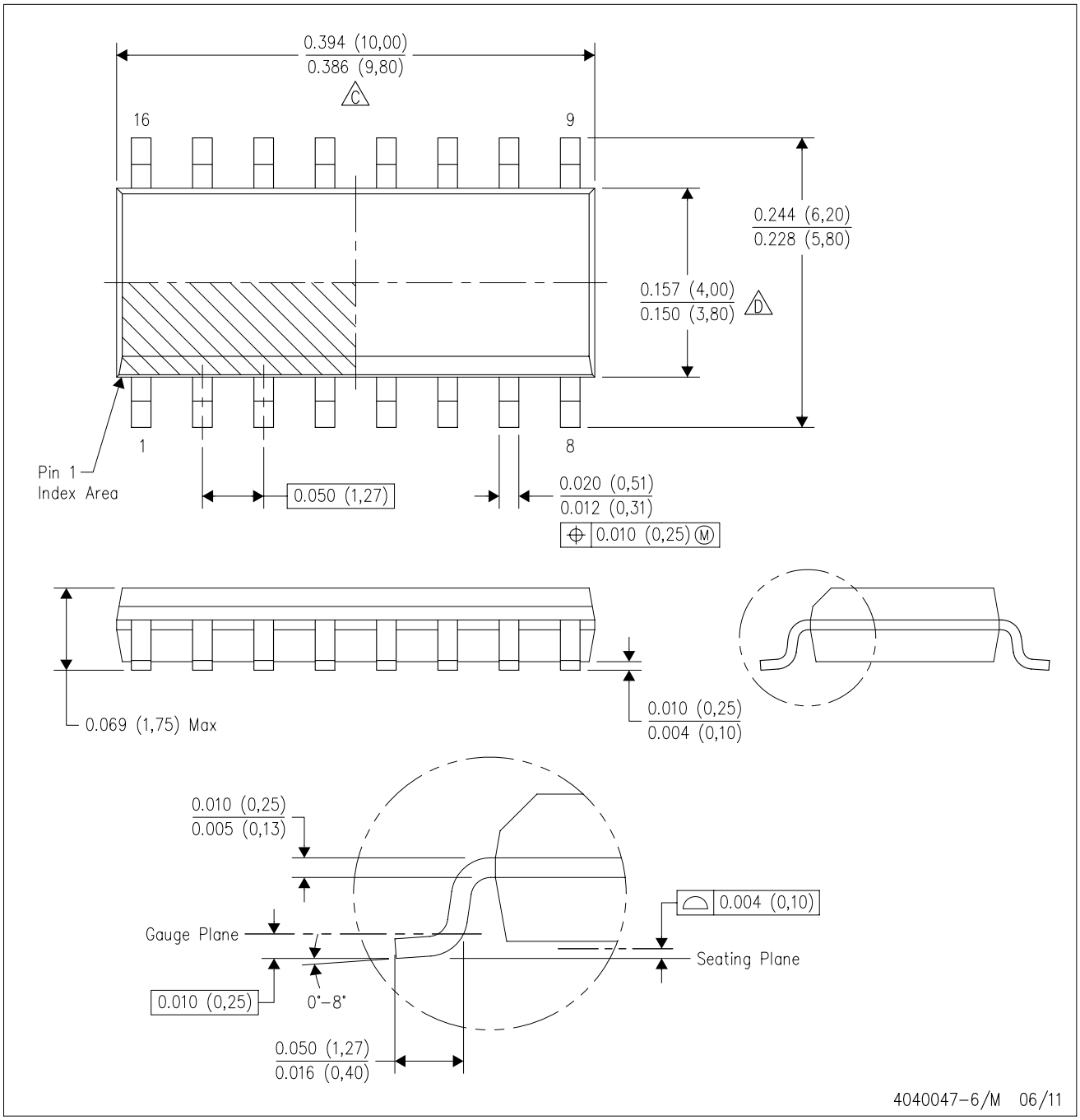

NOTES:
A. All linear dimensions are in inches (millimeters).
B. This drawing is subject to change without notice.
C. Body length does not include mold flash, protrusions, or gate burrs. Mold flash, protrusions, or gate burrs shall not exceed 0.006 (0,15) each side.
D. Body width does not include interlead flash. Interlead flash shall not exceed 0.017 (0,43) each side.
E. Reference JEDEC MS–012 variation AC.

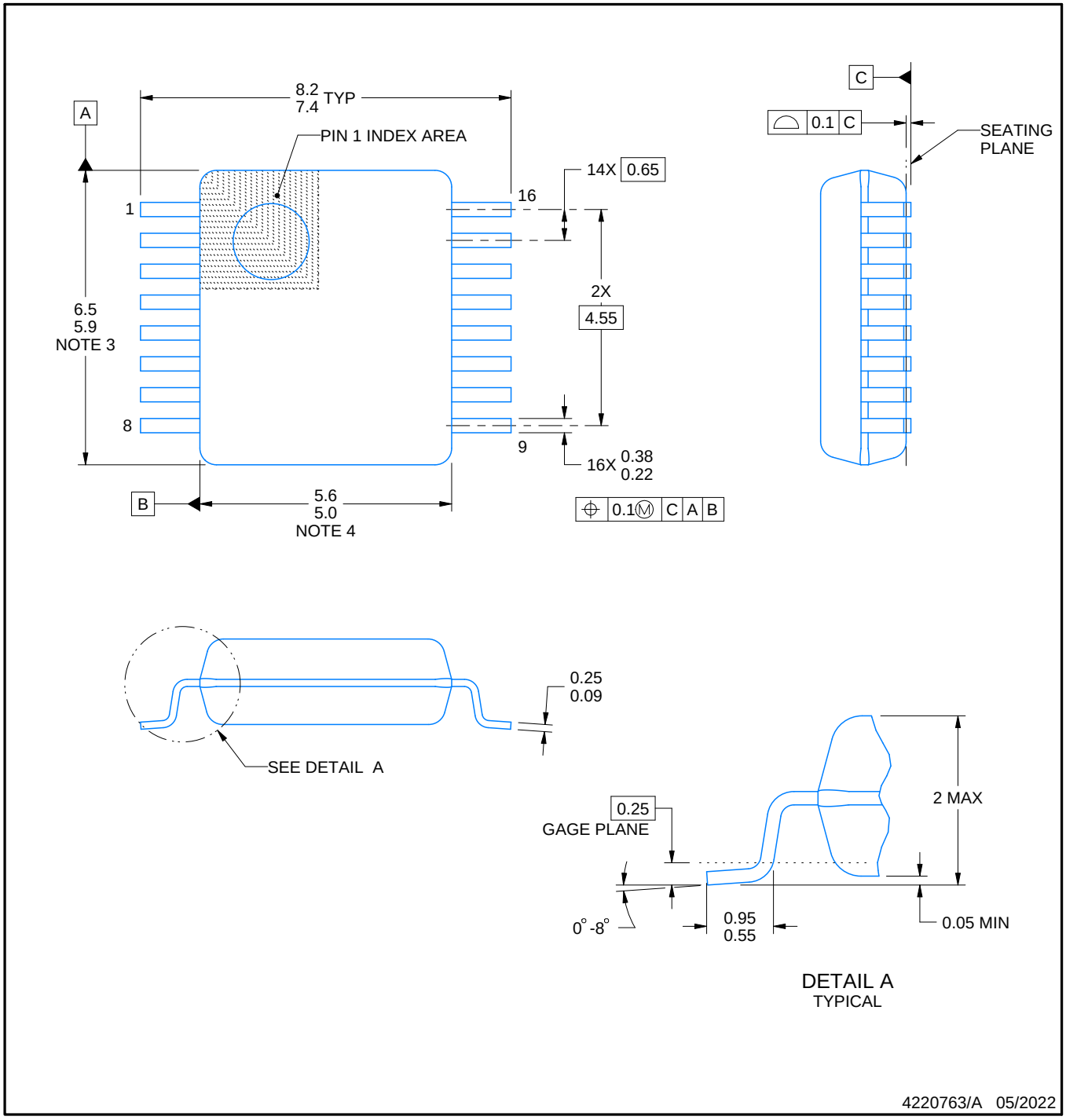

NOTES:

1. All linear dimensions are in millimeters. Any dimensions in parenthesis are for reference only. Dimensioning and tolerancing per ASME Y14.5M.
2. This drawing is subject to change without notice.
3. This dimension does not include mold flash, protrusions, or gate burrs. Mold flash, protrusions, or gate burrs shall not exceed 0.15 mm per side.
4. Reference JEDEC registration MO-150.

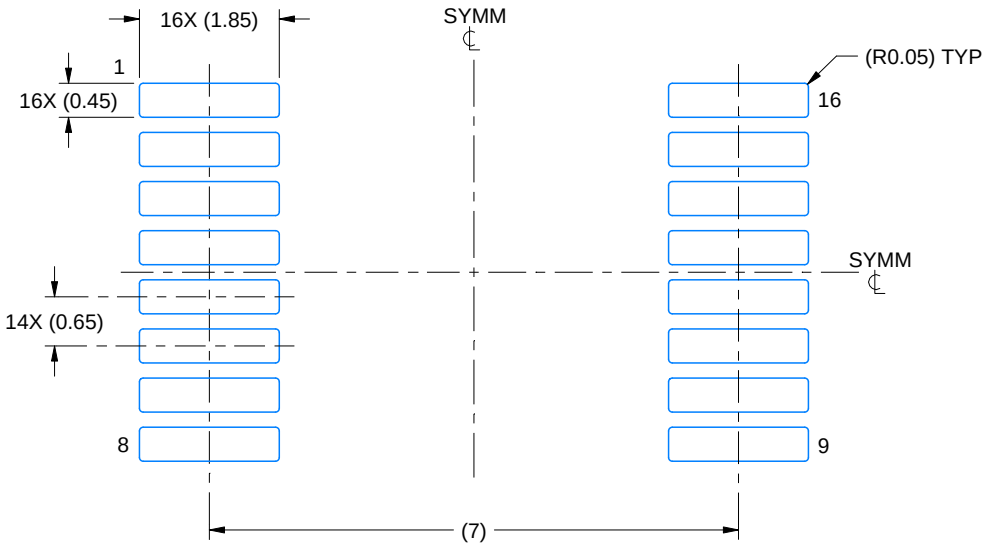

LAND PATTERN EXAMPLE
EXPOSED METAL SHOWN
SCALE: 10X

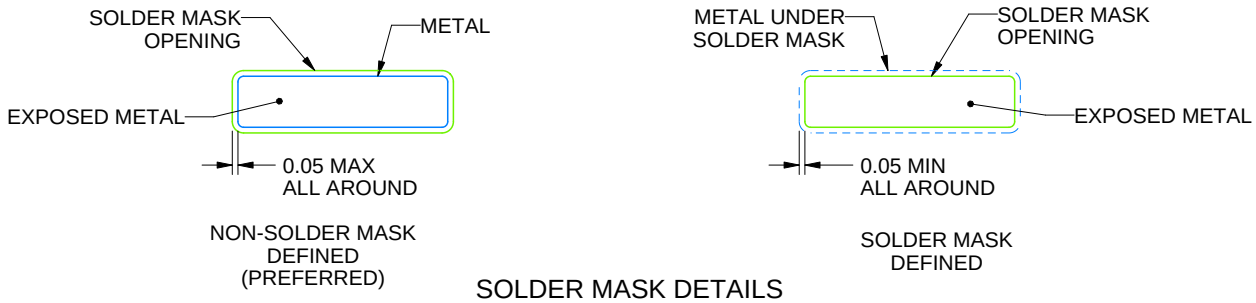

SOLDER MASK DETAILS

4220763/A 05/2022

NOTES: (continued)

5. Publication IPC-7351 may have alternate designs.
6. Solder mask tolerances between and around signal pads can vary based on board fabrication site.

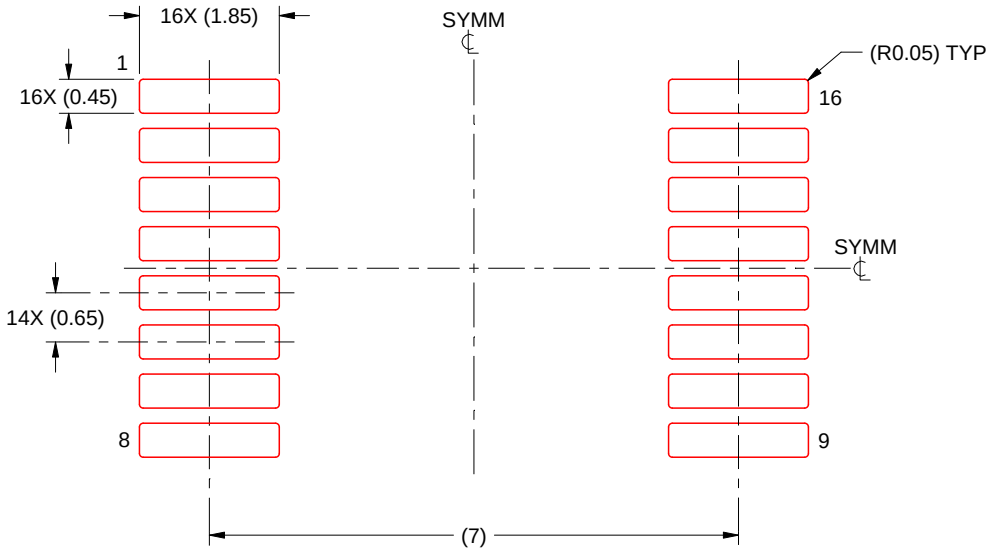

SOLDER PASTE EXAMPLE
BASED ON 0.125 mm THICK STENCIL
SCALE: 10X

4220763/A 05/2022

NOTES: (continued)

7. Laser cutting apertures with trapezoidal walls and rounded corners may offer better paste release. IPC-7525 may have alternate design recommendations.
8. Board assembly site may have different recommendations for stencil design.

DGV (R-PDSO-G)** **PLASTIC SMALL-OUTLINE**

24 PINS SHOWN

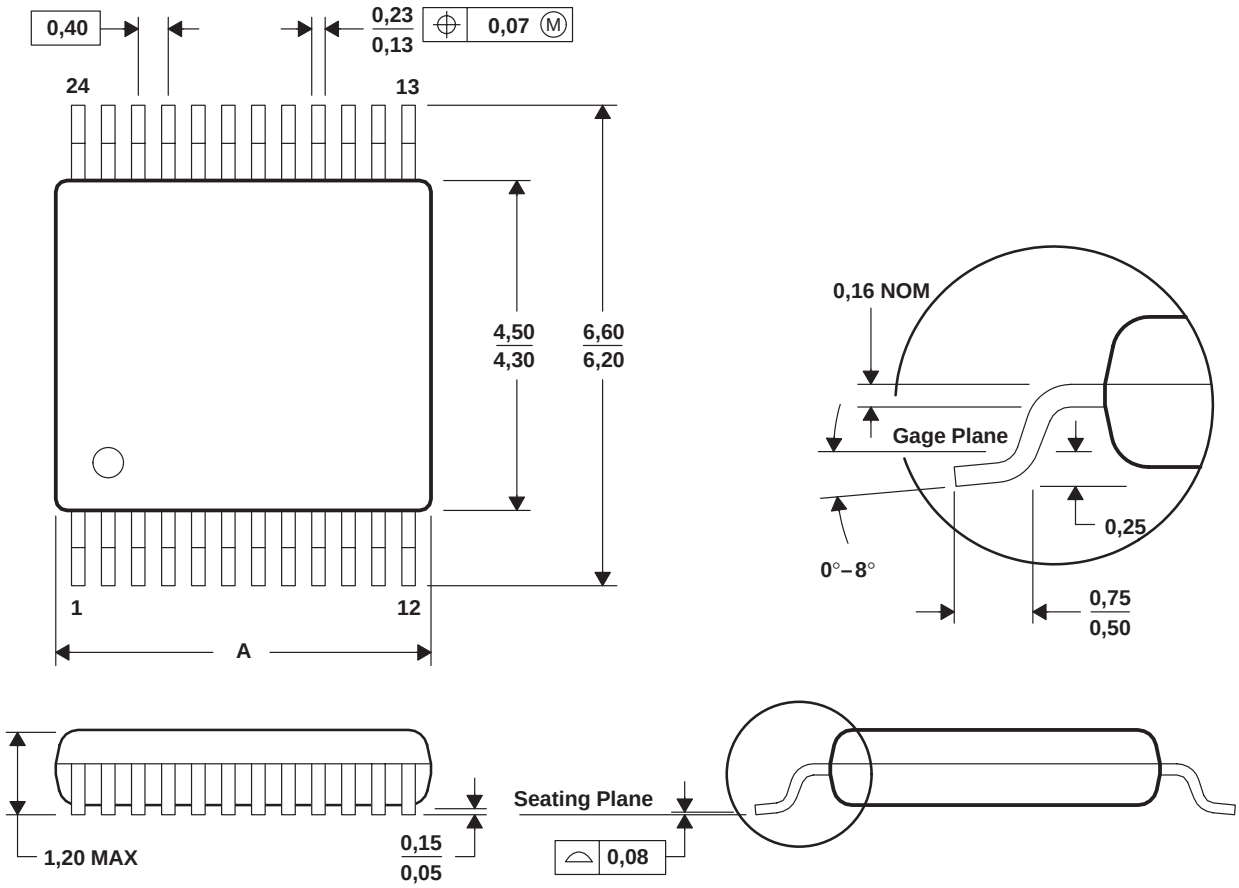

DIM \ PINS **	14	16	20	24	38	48	56
A MAX	3,70	3,70	5,10	5,10	7,90	9,80	11,40
A MIN	3,50	3,50	4,90	4,90	7,70	9,60	11,20

4073251/E 08/00

NOTES: A. All linear dimensions are in millimeters.
B. This drawing is subject to change without notice.
C. Body dimensions do not include mold flash or protrusion, not to exceed 0,15 per side.
D. Falls within JEDEC: 24/48 Pins – MO-153
14/16/20/56 Pins – MO-194

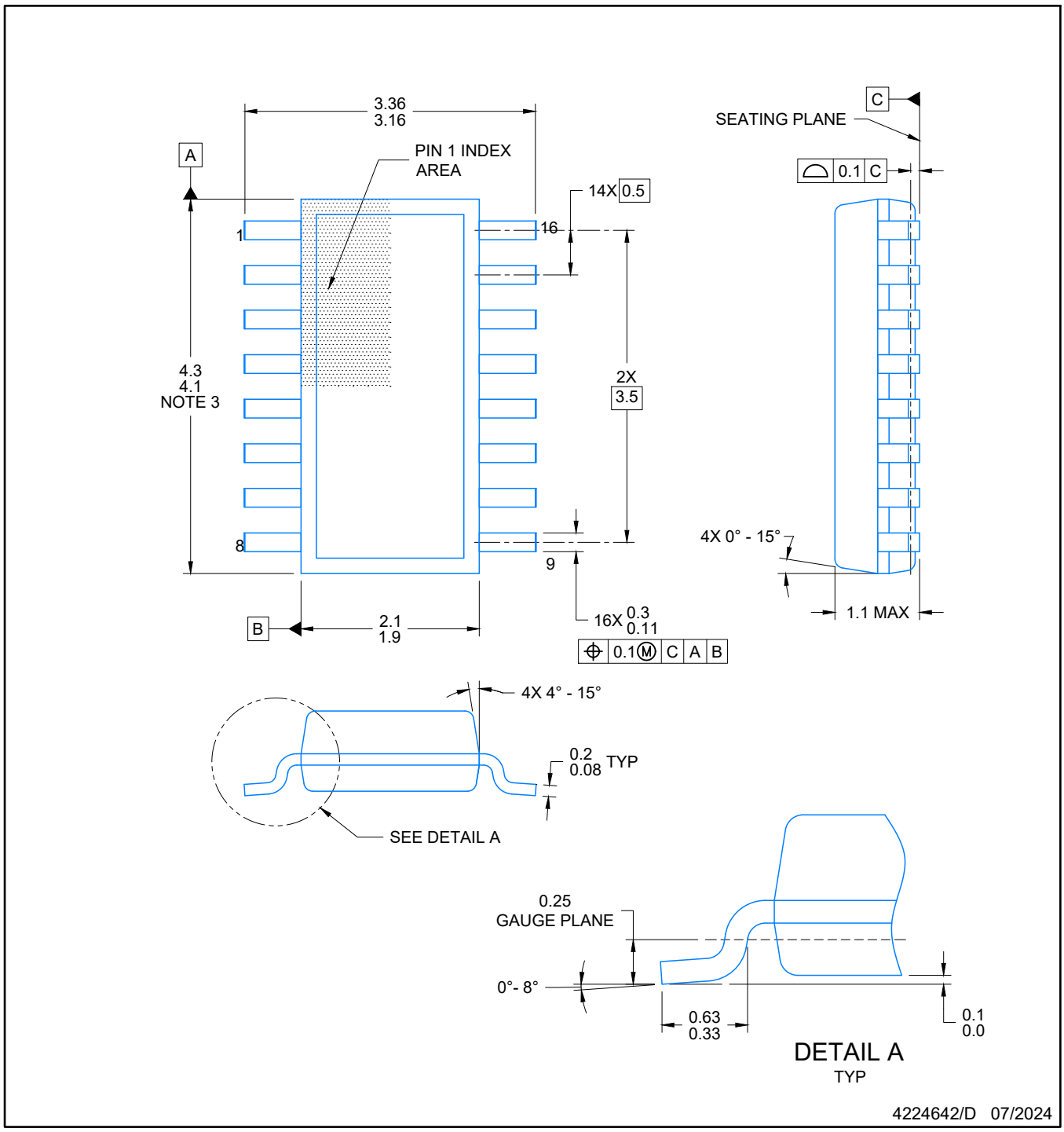

NOTES:

1. All linear dimensions are in millimeters. Any dimensions in parenthesis are for reference only. Dimensioning and tolerancing per ASME Y14.5M.
2. This drawing is subject to change without notice.
3. This dimension does not include mold flash, protrusions, or gate burrs. Mold flash, protrusions, or gate burrs shall not exceed 0.15 per side.
4. This dimension does not include interlead flash. Interlead flash shall not exceed 0.50 per side.
5. Reference JEDEC Registration MO-345, Variation AA

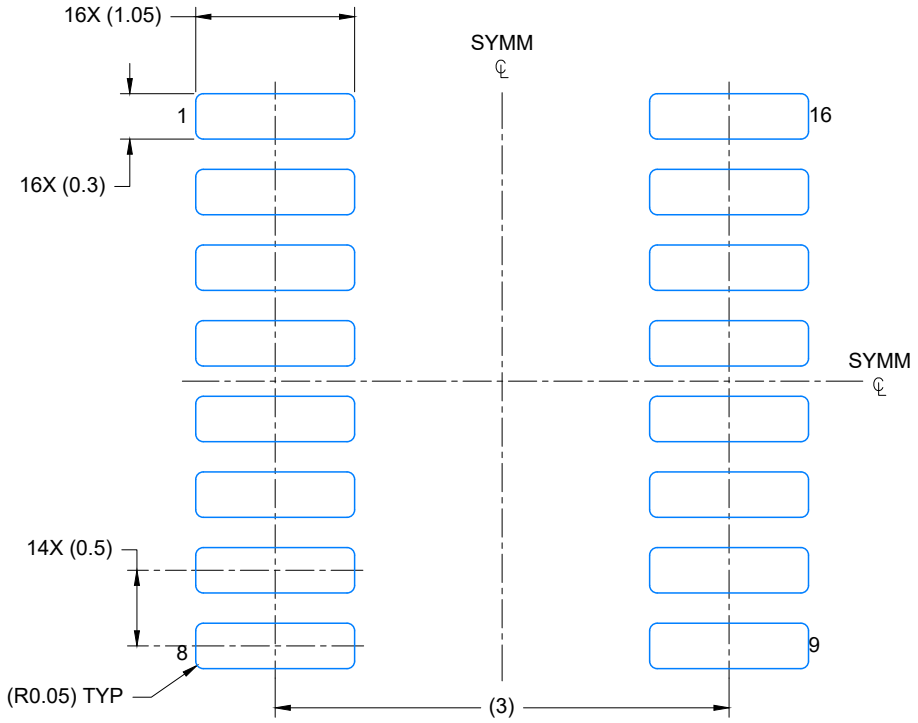

LAND PATTERN EXAMPLE
EXPOSED METAL SHOWN
SCALE: 20X

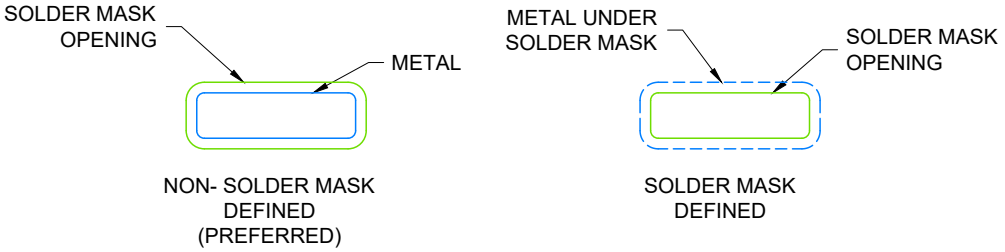

SOLDER MASK DETAILS

4224642/D 07/2024

NOTES: (continued)

6. Publication IPC-7351 may have alternate designs.
7. Solder mask tolerances between and around signal pads can vary based on board fabrication site.

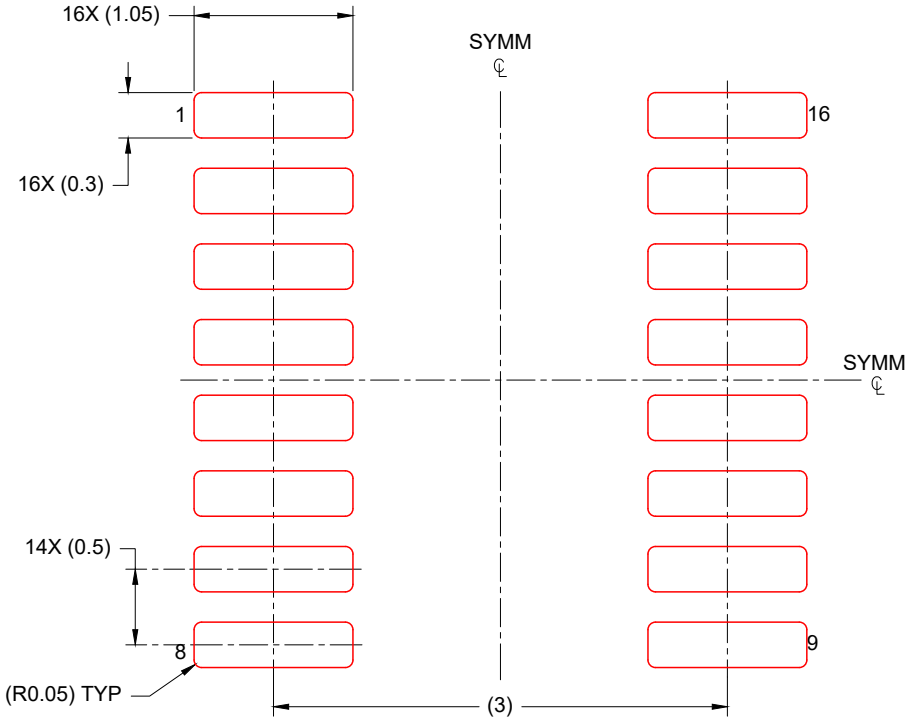

SOLDER PASTE EXAMPLE
BASED ON 0.125 mm THICK STENCIL
SCALE: 20X

4224642/D 07/2024

NOTES: (continued)

8. Laser cutting apertures with trapezoidal walls and rounded corners may offer better paste release. IPC-7525 may have alternate design recommendations.
9. Board assembly site may have different recommendations for stencil design.

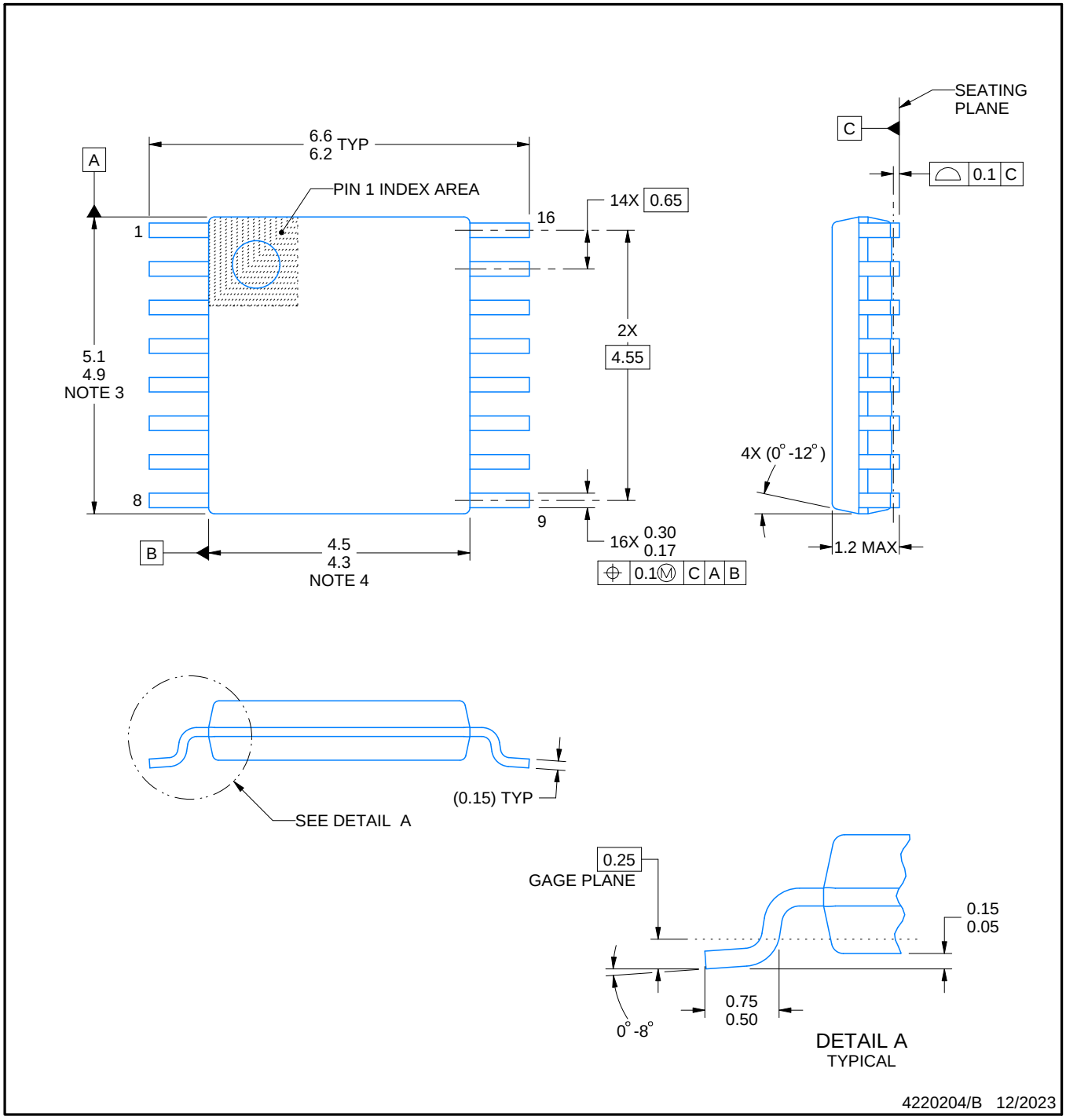

NOTES:

1. All linear dimensions are in millimeters. Any dimensions in parenthesis are for reference only. Dimensioning and tolerancing per ASME Y14.5M.
2. This drawing is subject to change without notice.
3. This dimension does not include mold flash, protrusions, or gate burrs. Mold flash, protrusions, or gate burrs shall not exceed 0.15 mm per side.
4. This dimension does not include interlead flash. Interlead flash shall not exceed 0.25 mm per side.
5. Reference JEDEC registration MO-153.

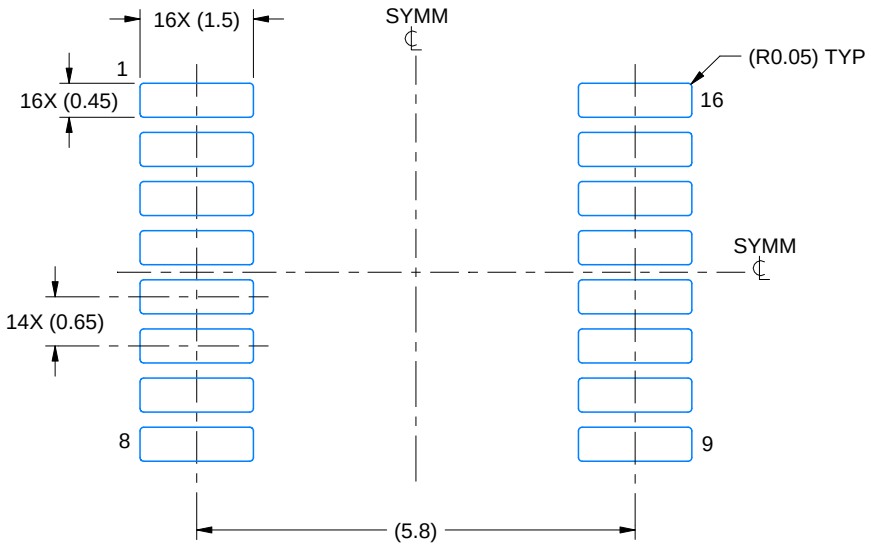

LAND PATTERN EXAMPLE
EXPOSED METAL SHOWN
SCALE: 10X

NON-SOLDER MASK DEFINED (PREFERRED)

SOLDER MASK DEFINED

SOLDER MASK DETAILS

4220204/B 12/2023

NOTES: (continued)

6. Publication IPC-7351 may have alternate designs.
7. Solder mask tolerances between and around signal pads can vary based on board fabrication site.

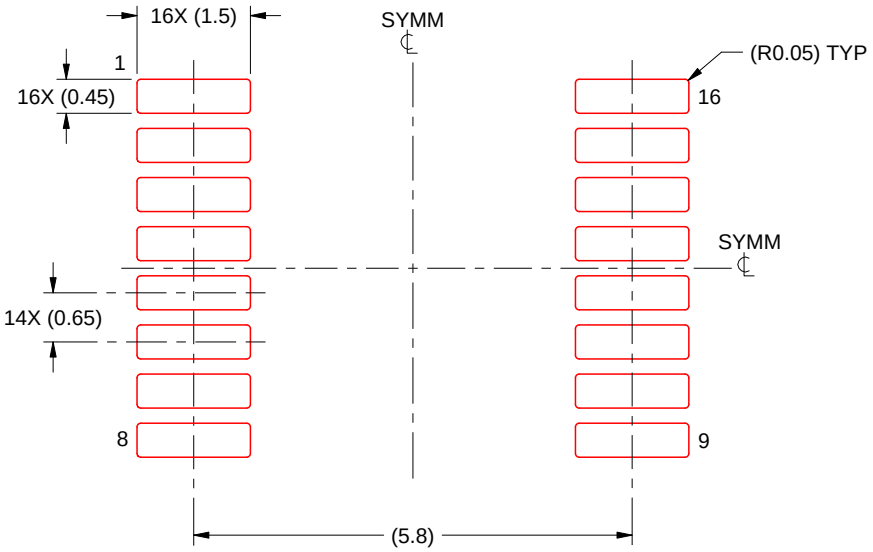

SOLDER PASTE EXAMPLE
BASED ON 0.125 mm THICK STENCIL
SCALE: 10X

4220204/B 12/2023

NOTES: (continued)

8. Laser cutting apertures with trapezoidal walls and rounded corners may offer better paste release. IPC-7525 may have alternate design recommendations.
9. Board assembly site may have different recommendations for stencil design.

N (R–PDIP–T**) PLASTIC DUAL–IN–LINE PACKAGE

16 PINS SHOWN

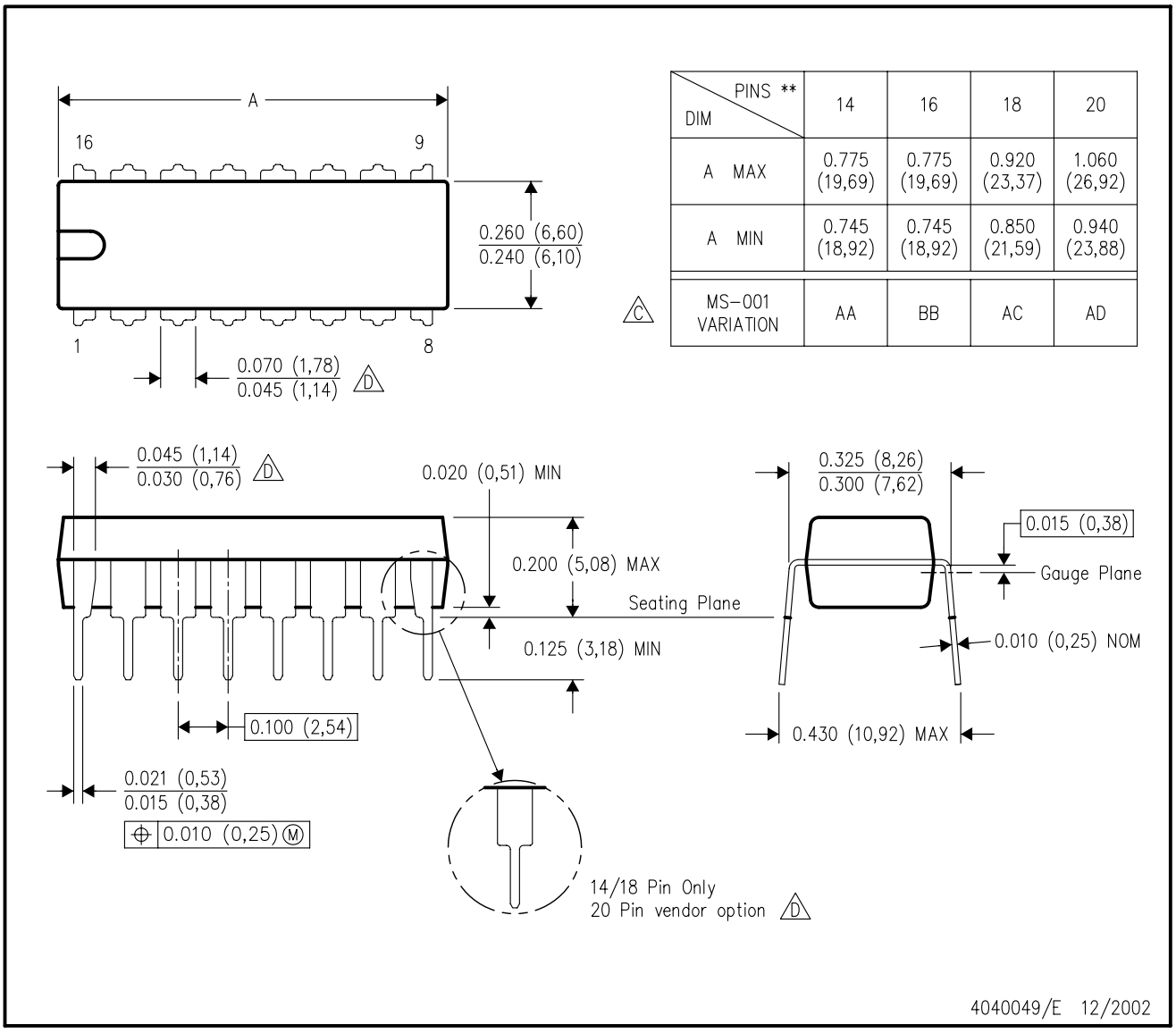

DIM \ PINS **	14	16	18	20
A MAX	0.775 (19,69)	0.775 (19,69)	0.920 (23,37)	1.060 (26,92)
A MIN	0.745 (18,92)	0.745 (18,92)	0.850 (21,59)	0.940 (23,88)
MS–001 VARIATION (C)	AA	BB	AC	AD

NOTES:
A. All linear dimensions are in inches (millimeters).
B. This drawing is subject to change without notice.
C. Falls within JEDEC MS–001, except 18 and 20 pin minimum body length (Dim A).
D. The 20 pin end lead shoulder width is a vendor option, either half or full width.

IMPORTANT NOTICE AND DISCLAIMER

TI PROVIDES TECHNICAL AND RELIABILITY DATA (INCLUDING DATASHEETS), DESIGN RESOURCES (INCLUDING REFERENCE DESIGNS), APPLICATION OR OTHER DESIGN ADVICE, WEB TOOLS, SAFETY INFORMATION, AND OTHER RESOURCES “AS IS” AND WITH ALL FAULTS, AND DISCLAIMS ALL WARRANTIES, EXPRESS AND IMPLIED, INCLUDING WITHOUT LIMITATION ANY IMPLIED WARRANTIES OF MERCHANTABILITY, FITNESS FOR A PARTICULAR PURPOSE OR NON-INFRINGEMENT OF THIRD PARTY INTELLECTUAL PROPERTY RIGHTS.

These resources are intended for skilled developers designing with TI products. You are solely responsible for (1) selecting the appropriate TI products for your application, (2) designing, validating and testing your application, and (3) ensuring your application meets applicable standards, and any other safety, security, regulatory or other requirements.

These resources are subject to change without notice. TI grants you permission to use these resources only for development of an application that uses the TI products described in the resource. Other reproduction and display of these resources is prohibited. No license is granted to any other TI intellectual property right or to any third party intellectual property right. TI disclaims responsibility for, and you fully indemnify TI and its representatives against any claims, damages, costs, losses, and liabilities arising out of your use of these resources.

TI’s products are provided subject to TI’s Terms of Sale, TI’s General Quality Guidelines, or other applicable terms available either on ti.com or provided in conjunction with such TI products. TI’s provision of these resources does not expand or otherwise alter TI’s applicable warranties or warranty disclaimers for TI products. Unless TI explicitly designates a product as custom or customer-specified, TI products are standard, catalog, general purpose devices.

TI objects to and rejects any additional or different terms you may propose.

Copyright © 2026, Texas Instruments Incorporated

Last updated 10/2025