# SN74LV4T86-EP Enhanced Product, Quadruple 2-Input Exclusive-OR Gates

## 1 Features

- Wide operating range of 1.8 V to 5.5 V
- Single-supply voltage translator (refer to *LVxT Enhanced Input Voltage*):
  - Up translation:
    - 1.2 V to 1.8 V
    - 1.5 V to 2.5 V
    - 1.8 V to 3.3 V
    - 3.3 V to 5.0 V
  - Down translation:
    - 5.0 V, 3.3 V, 2.5 V to 1.8 V
    - 5.0 V, 3.3 V to 2.5 V
    - 5.0 V to 3.3 V
- 5.5-V tolerant input pins
- Supports standard pinouts
- Up to 150Mbps with 5-V or 3.3-V $V_{CC}$
- Latch-up performance exceeds 250 mA per JESD 17
- Supports defense, aerospace, and medical applications:
  - Controlled baseline
  - One assembly and test site
  - One fabrication site
  - Extended product life cycle
  - Product traceability

## 2 Applications

- Enable or disable a digital signal
- Controlling an indicator LED
- Translation between communication modules and system controllers

## 3 Description

The SN74LV4T86-EP contains four independent 2-input XOR Gates with Schmitt-trigger inputs with extended voltage operation to allow for level translation. Each gate performs the Boolean function $Y = A \oplus B$ in positive logic. The output level is referenced to the supply voltage ($V_{CC}$) and supports 1.2-V, 1.8-V, 2.5-V, 3.3-V, and 5-V CMOS levels.

The input is designed with a lower threshold circuit to support up translation for lower voltage CMOS inputs (for example 1.2 V input to 1.8 V output or 1.8 V input to 3.3 V output). Additionally, the 5-V tolerant input pins enable down translation (for example 3.3 V to 2.5 V output).

**Package Information**

| PART NUMBER | PACKAGE(1) | PACKAGE SIZE(2) | BODY SIZE (NOM)(3) |
|---|---|---|---|
| SN74LV4T86-EP | PW (TSSOP, 14) | 5.00 mm × 6.40 mm | 5.00 mm × 4.40 mm |

(1) For more information, see Section 11.
(2) The package size (length × width) is a nominal value and includes pins, where applicable
(3) The body size (length × width) is a nominal value and does not include pins.

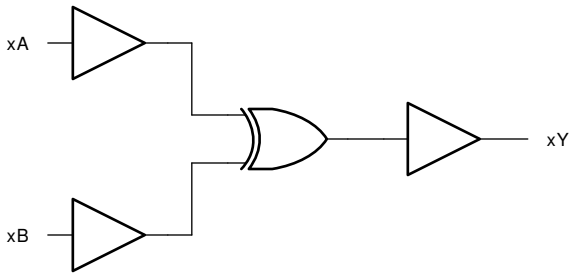


**Simplified Logic Diagram**

An IMPORTANT NOTICE at the end of this data sheet addresses availability, warranty, changes, use in safety-critical applications, intellectual property matters and other important disclaimers. PRODUCTION DATA.

# Table of Contents

**1 Features**....1
**2 Applications**....1
**3 Description**....1
**4 Pin Configuration and Functions**....3
**5 Specifications**....4
5.1 Absolute Maximum Ratings....4
5.2 ESD Ratings....4
5.3 Recommended Operating Conditions....4
5.4 Thermal Information....5
5.5 Electrical Characteristics....5
5.6 Switching Characteristics....5
5.7 Noise Characteristics....6
5.8 Typical Characteristics....6
**6 Parameter Measurement Information**....9
**7 Detailed Description**....10
7.1 Overview....10
7.2 Functional Block Diagram....10
7.3 Feature Description....10
7.4 Device Functional Modes....12
**8 Application and Implementation**....13
8.1 Application Information....13
8.2 Typical Application....13
8.3 Power Supply Recommendations....15
8.4 Layout....15
**9 Device and Documentation Support**....17
9.1 Documentation Support....17
9.2 Receiving Notification of Documentation Updates....17
9.3 Support Resources....17
9.4 Trademarks....17
9.5 Electrostatic Discharge Caution....17
9.6 Glossary....17
**10 Revision History**....17
**11 Mechanical, Packaging, and Orderable Information**....17


Copyright © 2023 Texas Instruments Incorporated

# 4 Pin Configuration and Functions

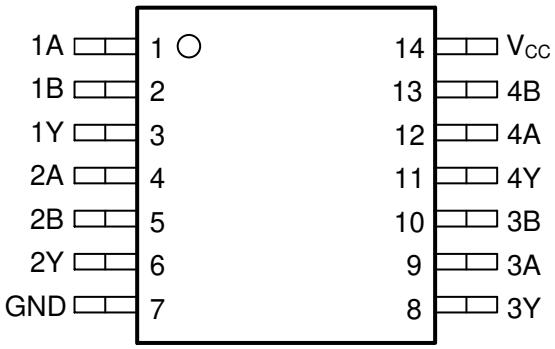


**Figure 4-1. PW Package, 14-Pin TSSOP (Top View)**

**Table 4-1. Pin Functions**

| PIN | | TYPE[1] | DESCRIPTION |
|---|---|---|---|
| NAME | NO. | | |
| 1A | 1 | I | Channel 1, Input A |
| 1B | 2 | I | Channel 1, Input B |
| 1Y | 3 | O | Channel 1, Output Y |
| 2A | 4 | I | Channel 2, Input A |
| 2B | 5 | I | Channel 2, Input B |
| 2Y | 6 | O | Channel 2, Output Y |
| GND | 7 | G | Ground |
| 3Y | 8 | O | Channel 3, Output Y |
| 3A | 9 | I | Channel 3, Input A |
| 3B | 10 | I | Channel 3, Input B |
| 4Y | 11 | O | Channel 4, Output Y |
| 4A | 12 | I | Channel 4, Input A |
| 4B | 13 | I | Channel 4, Input B |
| $V_{CC}$ | 14 | P | Positive Supply |

(1) I = Input, O = Output, I/O = Input or Output, G = Ground, P = Power.

Copyright © 2023 Texas Instruments Incorporated

# 5 Specifications

## 5.1 Absolute Maximum Ratings

over operating free-air temperature range (unless otherwise noted)(1)

| | | | MIN | MAX | UNIT |
|---|---|---|---|---|---|
| $V_{CC}$ | Supply voltage range | | –0.5 | 7 | V |
| $V_I$ | Input voltage range(2) | | –0.5 | 7 | V |
| $V_O$ | Voltage range applied to any output in the high-impedance or power-off state(2) | | –0.5 | 7 | V |
| $V_O$ | Output voltage range(2) | | –0.5 | $V_{CC}$ + 0.5 | V |
| $I_{IK}$ | Input clamp current | $V_I$ < -0.5 V | | -20 | mA |
| $I_{OK}$ | Output clamp current | $V_O$ < -0.5 V or $V_O$ > $V_{CC}$ + 0.5 V | | ±20 | mA |
| $I_O$ | Continuous output current | $V_O$ = 0 to $V_{CC}$ | | ±25 | mA |
| | Continuous output current through $V_{CC}$ or GND | | | ±50 | mA |
| $T_{stg}$ | Storage temperature | | -65 | 150 | °C |

(1) Operation outside the *Absolute Maximum Ratings* may cause permanent device damage. Absolute maximum ratings do not imply functional operation of the device at these or any other conditions beyond those listed under *Recommended Operating Conditions*. If briefly operating outside the *Recommended Operating Conditions* but within the *Absolute Maximum Ratings*, the device may not sustain damage, but it may not be fully functional. Operating the device in this manner may affect device reliability, functionality, performance, and shorten the device lifetime.
(2) The input and output voltage ratings may be exceeded if the input and output current ratings are observed.

## 5.2 ESD Ratings

| | | | VALUE | UNIT |
|---|---|---|---|---|
| $V_{(ESD)}$ | Electrostatic discharge | Human-body model (HBM), per ANSI/ESDA/JEDEC JS-001(1) | ±2000 | V |
| | | Charged-device model (CDM), per ANSI/ESDA/JEDEC JS-002(2) | ±1000 | |

(1) JEDEC document JEP155 states that 500-V HBM allows safe manufacturing with a standard ESD control process.
(2) JEDEC document JEP157 states that 250-V CDM allows safe manufacturing with a standard ESD control process.

## 5.3 Recommended Operating Conditions

over operating free-air temperature range (unless otherwise noted)

| | | | MIN | MAX | UNIT |
|---|---|---|---|---|---|
| $V_{CC}$ | Supply voltage | | 1.6 | 5.5 | V |
| $V_I$ | Input voltage | | 0 | 5.5 | V |
| $V_O$ | Output voltage | | 0 | $V_{CC}$ | V |
| $V_{IH}$ | High-level input voltage | $V_{CC}$ = 1.65 V to 2 V | 1.1 | | V |
| | | $V_{CC}$ = 2.25 V to 2.75 V | 1.28 | | |
| | | $V_{CC}$ = 3 V to 3.6 V | 1.45 | | |
| | | $V_{CC}$ = 4.5 V to 5.5 V | 2 | | |
| $V_{IL}$ | Low-Level input voltage | $V_{CC}$ = 1.65 V to 2 V | | 0.5 | V |
| | | $V_{CC}$ = 2.25 V to 2.75 V | | 0.65 | |
| | | $V_{CC}$ = 3 V to 3.6 V | | 0.75 | |
| | | $V_{CC}$ = 4.5 V to 5.5 V | | 0.85 | |
| $I_O$ | Output current | $V_{CC}$ = 1.6 V to 2 V | | ±3 | mA |
| | | $V_{CC}$ = 2.25 V to 2.75 V | | ±7 | |
| | | $V_{CC}$ = 3.3 V to 5.0 V | | ±15 | |
| Δt/Δv | Input transition rise or fall rate | $V_{CC}$ = 1.6 V to 5.0 V | | 20 | ns/V |
| $T_A$ | Operating free-air temperature | | -55 | 125 | °C |


Copyright © 2023 Texas Instruments Incorporated

## 5.4 Thermal Information

| THERMAL METRIC[1] | | SN74LV4T86-EP PW (TSSOP) 14 PINS | UNIT |
|---|---|---|---|
| $R_{\theta JA}$ | Junction-to-ambient thermal resistance | 147.7 | °C/W |
| $R_{\theta JC(top)}$ | Junction-to-case (top) thermal resistance | 77.4 | °C/W |
| $R_{\theta JB}$ | Junction-to-board thermal resistance | 90.9 | °C/W |
| $\Psi_{JT}$ | Junction-to-top characterization parameter | 27.2 | °C/W |
| $Y_{JB}$ | Junction-to-board characterization parameter | 90.2 | °C/W |
| $R_{\theta JC(bot)}$ | Junction-to-case (bottom) thermal resistance | N/A | °C/W |

(1) For more information about traditional and new thermal metrics, see the Semiconductor and IC Package Thermal Metrics application report.

## 5.5 Electrical Characteristics

over operating free-air temperature range (unless otherwise noted)

| PARAMETER | TEST CONDITIONS | $V_{CC}$ | $T_A$ = 25°C | | | -55°C to 125°C | | | UNIT |
|---|---|---|---|---|---|---|---|---|---|
| | | | MIN | TYP | MAX | MIN | TYP | MAX | |
| $V_{OH}$ | $I_{OH}$ = -50 µA | 1.65 V to 5.5 V | $V_{CC}$-0.1 | | | $V_{CC}$-0.1 | | | V |
| | $I_{OH}$ = -2 mA | 1.65 V to 2 V | 1.28 | 1.7 (1) | | 1.21 | | | |
| | $I_{OH}$ = -3 mA | 2.25 V to 2.75 V | 2 | 2.4(1) | | 1.93 | | | |
| | $I_{OH}$ = -5.5 mA | 3 V to 3.6 V | 2.6 | 3.08(1) | | 2.49 | | | |
| | $I_{OH}$ = -8 mA | 4.5 V to 5.5 V | 4.1 | 4.65(1) | | 3.95 | | | |
| $V_{OL}$ | $I_{OL}$ = 50 µA | 1.65 V to 5.5 V | | | 0.1 | | | 0.1 | V |
| | $I_{OL}$ = 2 mA | 1.65 V to 2 V | | 0.1(1) | 0.2 | | | 0.25 | |
| | $I_{OL}$ = 3 mA | 2.25 V to 2.75 V | | 0.1(1) | 0.15 | | | 0.2 | |
| | $I_{OL}$ = 5.5 mA | 3 V to 3.6 V | | 0.2(1) | 0.2 | | | 0.25 | |
| | $I_{OL}$ = 8 mA | 4.5 V to 5.5 V | | 0.3(1) | 0.3 | | | 0.35 | |
| $I_I$ | $V_I$ = 0 V or $V_{CC}$ | 0 V to 5.5 V | | | ±0.1 | | | ±1 | µA |
| $I_{CC}$ | $V_I$ = 0 V or $V_{CC}$, $I_O$ = 0; open on loading | 1.65 V to 5.5 V | | | 2 | | | 20 | µA |
| $\Delta I_{CC}$ | One input at 0.3 V or 3.4 V, other inputs at 0 or $V_{CC}$, $I_O$ = 0 | 5.5 V | | | 1.35 | | | 1.5 | mA |
| | One input at 0.3 V or 1.1 V, other inputs at 0 or $V_{CC}$, $I_O$ = 0 | 1.8 V | | | 10 | | | 20 | µA |
| $C_I$ | $V_I$ = $V_{CC}$ or GND | 5 V | | 4 | 10 | | | 10 | pF |
| $C_O$ | $V_O$ = $V_{CC}$ or GND | 5 V | | 3 | | | | | pF |
| $C_{PD}$ | No load, F = 1MHz | 5 V | | 14 | | | | | pF |

(1) Typical value at nearest nominal voltage (1.8 V, 2.5 V, 3.3 V, and 5 V)

## 5.6 Switching Characteristics

over operating free-air temperature range; typical ratings measured at $T_A$ = 25°C (unless otherwise noted).

| PARAMETER | FROM (INPUT) | TO (OUTPUT) | LOAD CAPACITANCE | $V_{CC}$ | MIN | TYP | MAX | UNIT |
|---|---|---|---|---|---|---|---|---|
| $t_{PHL}$ | A or B | Y | $C_L$ = 15pF | 1.8 V | | 15.9 | 38.1 | nS |
| $t_{PLH}$ | A or B | Y | $C_L$ = 15pF | 1.8 V | | 13.5 | 33.7 | nS |
| $t_{PHL}$ | A or B | Y | $C_L$ = 50pF | 1.8 V | | 18.6 | 43.6 | nS |

Copyright © 2023 Texas Instruments Incorporated

## 5.6 Switching Characteristics (continued)

over operating free-air temperature range; typical ratings measured at $T_A$ = 25°C (unless otherwise noted).

| PARAMETER | FROM (INPUT) | TO (OUTPUT) | LOAD CAPACITANCE | $V_{CC}$ | MIN | TYP | MAX | UNIT |
|---|---|---|---|---|---|---|---|---|
| $t_{PLH}$ | A or B | Y | $C_L$ = 50pF | 1.8 V | | 15.6 | 38.0 | nS |
| $t_{PHL}$ | A or B | Y | $C_L$ = 15pF | 2.5 V | | 9.4 | 22.6 | nS |
| $t_{PLH}$ | A or B | Y | $C_L$ = 15pF | 2.5 V | | 7.7 | 20.2 | nS |
| $t_{PHL}$ | A or B | Y | $C_L$ = 50pF | 2.5 V | | 11.3 | 26.4 | nS |
| $t_{PLH}$ | A or B | Y | $C_L$ = 50pF | 2.5 V | | 9.5 | 23.1 | nS |
| $t_{PHL}$ | A or B | Y | $C_L$ = 15pF | 3.3 V | | 7.0 | 16.1 | nS |
| $t_{PLH}$ | A or B | Y | $C_L$ = 15pF | 3.3 V | | 5.7 | 14.6 | nS |
| $t_{PHL}$ | A or B | Y | $C_L$ = 50pF | 3.3 V | | 8.2 | 19.0 | nS |
| $t_{PLH}$ | A or B | Y | $C_L$ = 50pF | 3.3 V | | 7.0 | 16.7 | nS |
| $t_{PHL}$ | A or B | Y | $C_L$ = 15pF | 5 V | | 5.0 | 10.6 | nS |
| $t_{PLH}$ | A or B | Y | $C_L$ = 15pF | 5 V | | 4.7 | 9.7 | nS |
| $t_{PHL}$ | A or B | Y | $C_L$ = 50pF | 5 V | | 6.1 | 13.0 | nS |
| $t_{PLH}$ | A or B | Y | $C_L$ = 50pF | 5 V | | 5.7 | 11.4 | nS |

## 5.7 Noise Characteristics

VCC = 5 V, CL = 50 pF, TA = 25°C

| PARAMETER | DESCRIPTION | MIN | TYP | MAX | UNIT |
|---|---|---|---|---|---|
| $V_{OL(P)}$ | Quiet output, maximum dynamic $V_{OL}$ | | 1 | 1.2 | V |
| $V_{OL(V)}$ | Quiet output, minimum dynamic $V_{OL}$ | -0.8 | -0.3 | | V |
| $V_{OH(V)}$ | Quiet output, minimum dynamic $V_{OH}$ | 4.4 | 5 | | V |
| $V_{IH(D)}$ | High-level dynamic input voltage | 2.1 | | | V |
| $V_{IL(D)}$ | Low-level dynamic input voltage | | | 0.5 | V |

## 5.8 Typical Characteristics

$T_A$ = 25°C (unless otherwise noted)

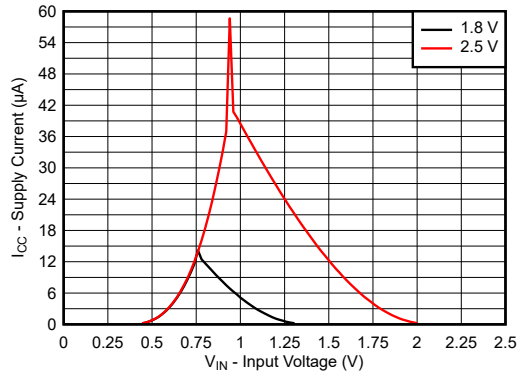


**Figure 5-1. Supply Current Across Input Voltage 1.8-V and 2.5-V Supply**

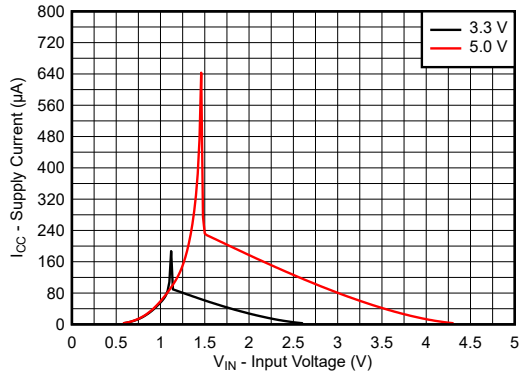


**Figure 5-2. Supply Current Across Input Voltage 3.3-V and 5.0-V Supply**


Copyright © 2023 Texas Instruments Incorporated

## 5.8 Typical Characteristics (continued)

$T_A$ = 25°C (unless otherwise noted)

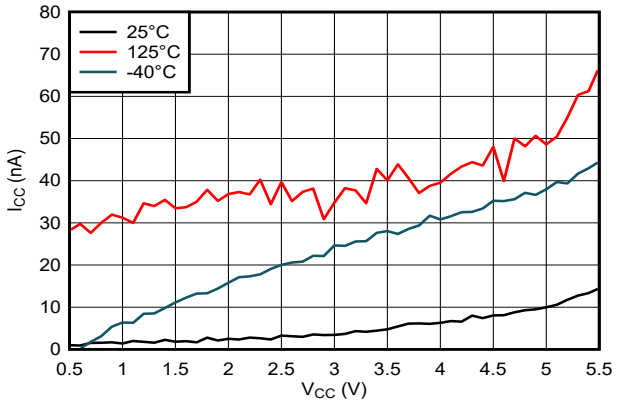


**Figure 5-3. Supply Current Across Supply Voltage**

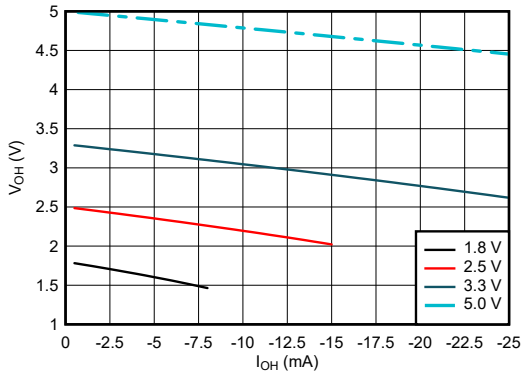


**Figure 5-4. Output Voltage vs Current in HIGH State**

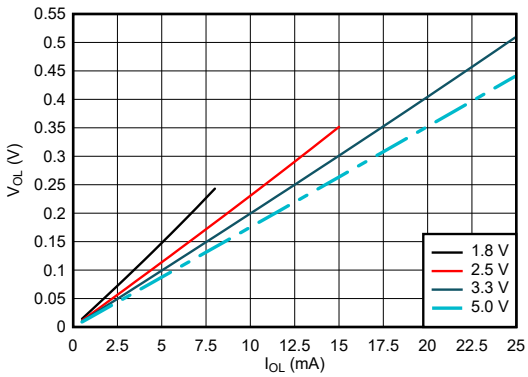


**Figure 5-5. Output Voltage vs Current in LOW State**

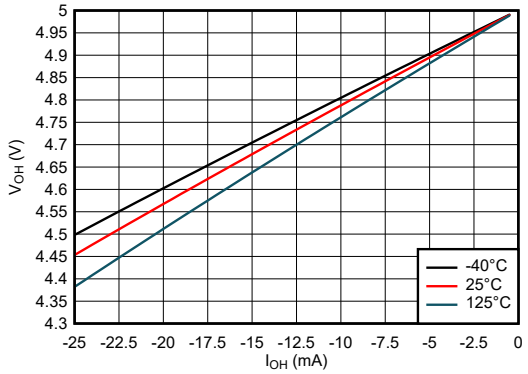


**Figure 5-6. Output Voltage vs Current in HIGH State; 5-V Supply**

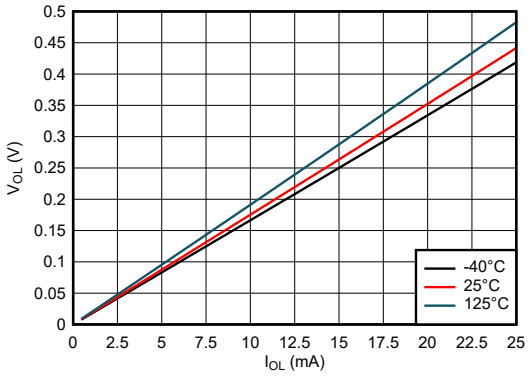


**Figure 5-7. Output Voltage vs Current in LOW State; 5-V Supply**

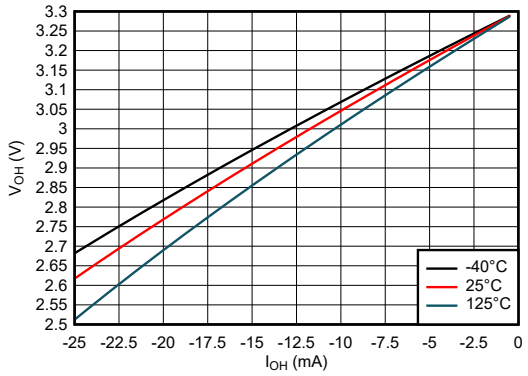


**Figure 5-8. Output Voltage vs Current in HIGH State; 3.3-V Supply**

Copyright © 2023 Texas Instruments Incorporated

## 5.8 Typical Characteristics (continued)

$T_A$ = 25°C (unless otherwise noted)

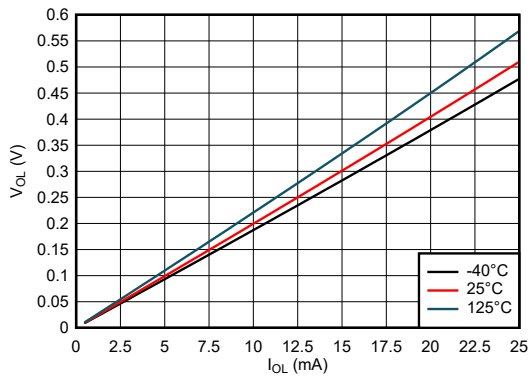


**Figure 5-9. Output Voltage vs Current in LOW State; 3.3-V Supply**

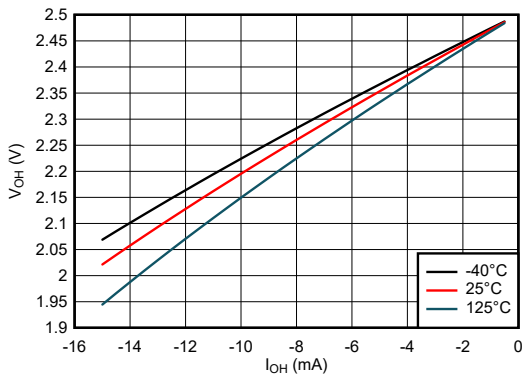


**Figure 5-10. Output Voltage vs Current in HIGH State; 2.5-V Supply**

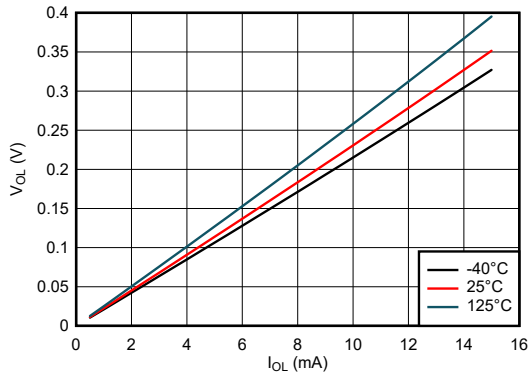


**Figure 5-11. Output Voltage vs Current in LOW State; 2.5-V Supply**

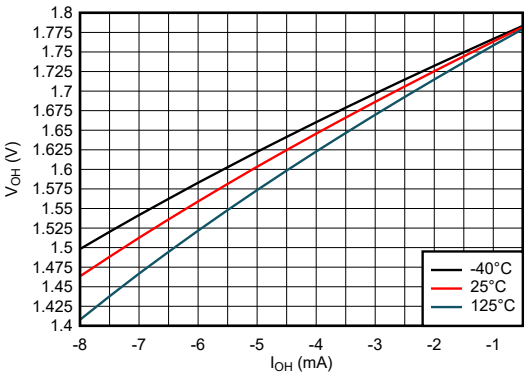


**Figure 5-12. Output Voltage vs Current in HIGH State; 1.8-V Supply**

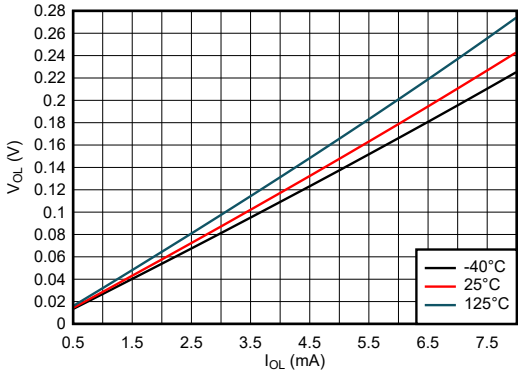


**Figure 5-13. Output Voltage vs Current in LOW State; 1.8-V Supply**


Copyright © 2023 Texas Instruments Incorporated

## 6 Parameter Measurement Information

Phase relationships between waveforms were chosen arbitrarily. All input pulses are supplied by generators having the following characteristics: PRR ≤ 1 MHz, $Z_O$ = 50 Ω, $t_t$< 2.5 ns.

For clock inputs, $f_{max}$ is measured when the input duty cycle is 50%.

The outputs are measured one at a time with one input transition per measurement.

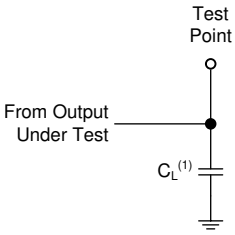


(1) $C_L$ includes probe and test-fixture capacitance.

**Figure 6-1. Load Circuit for Push-Pull Outputs**

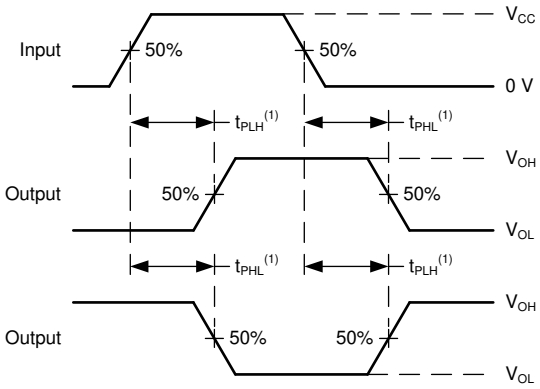


(1) The greater between $t_{PLH}$ and $t_{PHL}$ is the same as $t_{pd}$.

**Figure 6-2. Voltage Waveforms Propagation Delays**

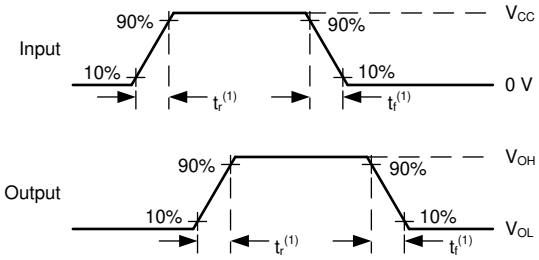


(1) The greater between $t_r$ and $t_f$ is the same as $t_t$.

**Figure 6-3. Voltage Waveforms, Input and Output Transition Times**

# 7 Detailed Description

## 7.1 Overview

The SN74LV4T86-EP contains a single buffer with extended voltage operation to allow for level translation. The buffer performs the Boolean function Y = A in positive logic. The output level is referenced to the supply voltage ($V_{CC}$) and supports 1.8-V, 2.5-V, 3.3-V, and 5-V CMOS levels.

## 7.2 Functional Block Diagram

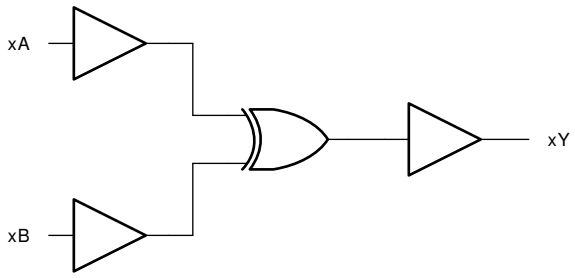


## 7.3 Feature Description

### 7.3.1 Balanced CMOS Push-Pull Outputs

This device includes balanced CMOS push-pull outputs. The term *balanced* indicates that the device can sink and source similar currents. The drive capability of this device may create fast edges into light loads so routing and load conditions should be considered to prevent ringing. Additionally, the outputs of this device are capable of driving larger currents than the device can sustain without being damaged. It is important for the output power of the device to be limited to avoid damage due to overcurrent. The electrical and thermal limits defined in the *Absolute Maximum Ratings* must be followed at all times.

Unused push-pull CMOS outputs should be left disconnected.

### 7.3.2 Clamp Diode Structure

As Figure 7-1 shows, the outputs to this device have both positive and negative clamping diodes, and the inputs to this device have negative clamping diodes only.

**CAUTION**

Voltages beyond the values specified in the *Absolute Maximum Ratings* table can cause damage to the device. The input and output voltage ratings may be exceeded if the input and output clamp-current ratings are observed.

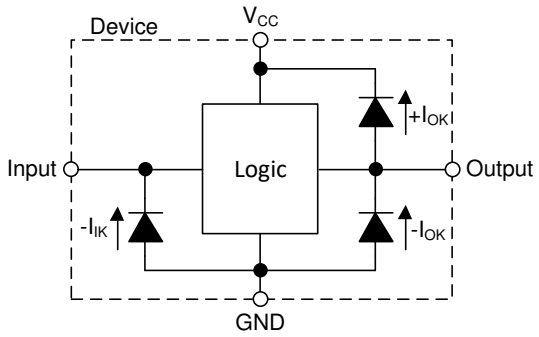


**Figure 7-1. Electrical Placement of Clamping Diodes for Each Input and Output**

### 7.3.3 SCxT Enhanced Input Voltage

The SN74LV4T86-EP belongs to TI's SCxT family of logic devices with integrated voltage level translation. This family of devices was designed with reduced input voltage thresholds to support up-translation, and


Copyright © 2023 Texas Instruments Incorporated

inputs tolerant of signals with up to 5.5 V levels to support down-translation. The output voltage will always be referenced to the supply voltage ($V_{CC}$), as described in the *Electrical Characteristics* table. For proper functionality, input signals must remain at or below the specified $V_{IH(MIN)}$ level for a HIGH input state, and at or below the specified $V_{IL(MAX)}$ for a LOW input state. Figure 7-2 shows the typical $V_{IH}$ and $V_{IL}$ levels for the SCxT family of devices, as well as the voltage levels for standard CMOS devices for comparison.

The inputs are high impedance and are typically modeled as a resistor in parallel with the input capacitance given in the *Electrical Characteristics*. The worst case resistance is calculated with the maximum input voltage, given in the *Absolute Maximum Ratings*, and the maximum input leakage current, given in the *Electrical Characteristics*, using Ohm's law (R = V ÷ I).

The inputs require the input signals to transition between valid logic states quickly, as defined by the input transition time or rate in the *Recommended Operating Conditions* table. Failing to meet this specification will result in excessive power consumption and can cause oscillations. More details can be found in the *Implications of Slow or Floating CMOS Inputs* application report.

Do not leave inputs floating at any time during operation. Unused inputs must be terminated at $V_{CC}$ or GND. If a system will not be actively driving an input at all times, a pull-up or pull-down resistor can be added to provide a valid input voltage during these times. The resistor value will depend on multiple factors; however, a 10-kΩ resistor is recommended and will typically meet all requirements.

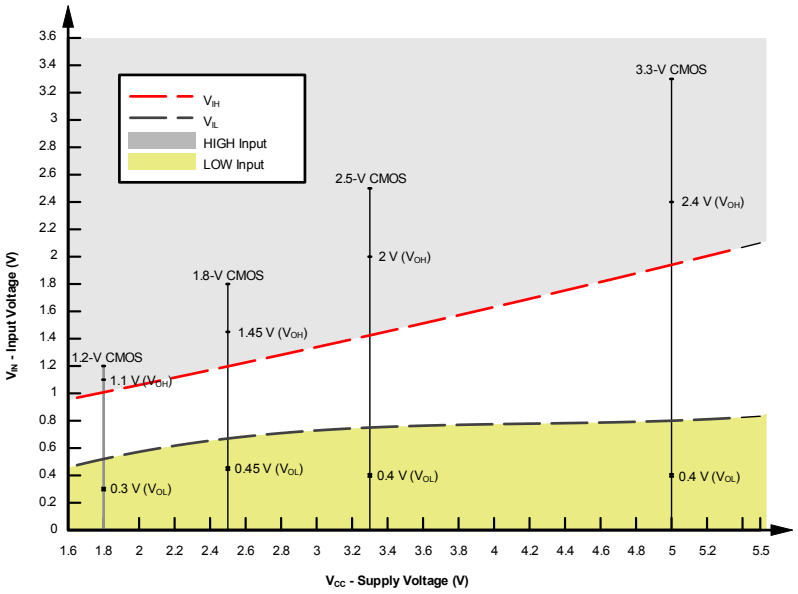


**Figure 7-2. SCxT Input Voltage Levels**

### *7.3.3.1 Down Translation*

Signals can be translated down using the SN74LV4T86-EP. The voltage applied at the $V_{CC}$ will determine the output voltage and the input thresholds as described in the *Recommended Operating Conditions* and *Electrical Characteristics* tables.

When connected to a high-impedance input, the output voltage will be approximately $V_{CC}$ in the HIGH state, and 0 V in the LOW state. Ensure that the input signals in the HIGH state are between $V_{IH(MIN)}$ and 5.5 V, and input signals in the LOW state are lower than $V_{IL(MAX)}$ as shown in Figure 7-2.

For example, standard CMOS inputs for devices operating at 5.0 V, 3.3 V or 2.5 V can be down-translated to match 1.8 V CMOS signals when operating from 1.8-V $V_{CC}$. See Figure 7-3.

*Down Translation Combinations* are as follows:

- 1.8-V $V_{CC}$ – Inputs from 2.5 V, 3.3 V, and 5.0 V

Copyright © 2023 Texas Instruments Incorporated

- 2.5-V $V_{CC}$ – Inputs from 3.3 V and 5.0 V
- 3.3-V $V_{CC}$ – Inputs from 5.0 V

#### *7.3.3.2 Up Translation*

Input signals can be up translated using the SN74LV4T86-EP. The voltage applied at $V_{CC}$ will determine the output voltage and the input thresholds as described in the *Recommended Operating Conditions* and *Electrical Characteristics* tables. When connected to a high-impedance input, the output voltage will be approximately $V_{CC}$ in the HIGH state, and 0 V in the LOW state.

The inputs have reduced thresholds that allow for input HIGH state levels which are much lower than standard values. For example, standard CMOS inputs for a device operating at a 5-V supply will have a $V_{IH(MIN)}$ of 3.5 V. For the SN74LV4T86-EP, $V_{IH(MIN)}$ with a 5-V supply is only 2 V, which would allow for up-translation from a typical 2.5-V to 5-V signals.

Ensure that the input signals in the HIGH state are above $V_{IH(MIN)}$ and input signals in the LOW state are lower than $V_{IL(MAX)}$ as shown in Figure 7-3.

*Up Translation Combinations* are as follows:

- 1.8-V $V_{CC}$ – Inputs from 1.2 V
- 2.5-V $V_{CC}$ – Inputs from 1.8 V
- 3.3-V $V_{CC}$ – Inputs from 1.8 V and 2.5 V
- 5.0-V $V_{CC}$ – Inputs from 2.5 V and 3.3 V

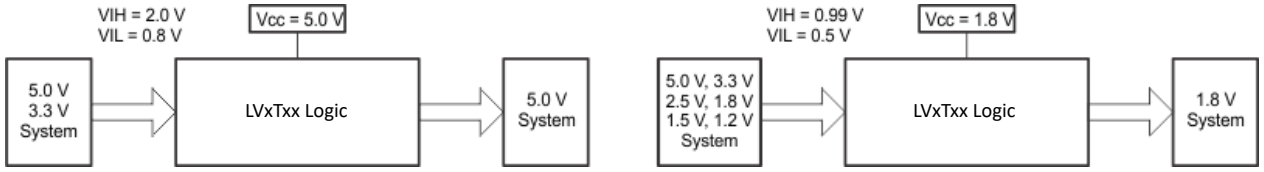


**Figure 7-3. SCxT Up and Down Translation Example**

## 7.4 Device Functional Modes

Table 7-1 is the function table for the SN74LV4T86-EP.

**Table 7-1. Function Table**

| INPUTS(1) | | OUTPUT |
|---|---|---|
| A | B | Y |
| L | L | L |
| L | H | H |
| H | L | H |
| H | H | L |

(1) H = high voltage level, L = low voltage level, X = do not care, Z = high impedance


Copyright © 2023 Texas Instruments Incorporated

# 8 Application and Implementation

**Note**

Information in the following applications sections is not part of the TI component specification, and TI does not warrant its accuracy or completeness. TI's customers are responsible for determining suitability of components for their purposes, as well as validating and testing their design implementation to confirm system functionality.

## 8.1 Application Information

The SN74LV4T86-EP is a low-drive CMOS device that can be used for a multitude of bus interface type applications where output ringing is a concern. The low drive and slow edge rates will minimize overshoot and undershoot on the outputs. The input switching levels have been lowered to accommodate TTL inputs of 0.8-V $V_{IL}$ and 2-V $V_{IH}$. This feature makes the device an excellent choice for translating up from 3.3 V to 5 V. Figure 8-1 shows this type of translation.

## 8.2 Typical Application

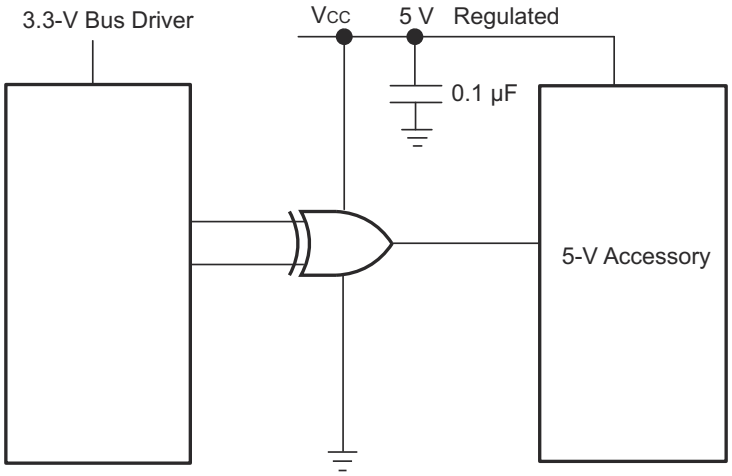


**Figure 8-1. Typical Application Schematic**

### 8.2.1 Design Requirements

#### *8.2.1.1 Power Considerations*

Ensure the desired supply voltage is within the range specified in the *Recommended Operating Conditions*. The supply voltage sets the device's electrical characteristics as described in the *Electrical Characteristics* section.

The positive voltage supply must be capable of sourcing current equal to the total current to be sourced by all outputs of the SN74LV4T86-EP plus the maximum static supply current, $I_{CC}$, listed in the *Electrical Characteristics*, and any transient current required for switching. The logic device can only source as much current that is provided by the positive supply source. Be sure to not exceed the maximum total current through $V_{CC}$ listed in the *Absolute Maximum Ratings*.

The ground must be capable of sinking current equal to the total current to be sunk by all outputs of the SN74LV4T86-EP plus the maximum supply current, $I_{CC}$, listed in the *Electrical Characteristics*, and any transient current required for switching. The logic device can only sink as much current that can be sunk into its ground connection. Be sure to not exceed the maximum total current through GND listed in the *Absolute Maximum Ratings*.

Copyright © 2023 Texas Instruments Incorporated

The SN74LV4T86-EP can drive a load with a total capacitance less than or equal to 50 pF while still meeting all of the data sheet specifications. Larger capacitive loads can be applied; however, it is not recommended to exceed 50 pF.

The SN74LV4T86-EP can drive a load with total resistance described by $R_L \geq V_O / I_O$, with the output voltage and current defined in the *Electrical Characteristics* table with $V_{OH}$ and $V_{OL}$. When outputting in the HIGH state, the output voltage in the equation is defined as the difference between the measured output voltage and the supply voltage at the $V_{CC}$ pin.

Total power consumption can be calculated using the information provided in *CMOS Power Consumption and Cpd Calculation*.

Thermal increase can be calculated using the information provided in *Thermal Characteristics of Standard Linear and Logic (SLL) Packages and Devices*.

**CAUTION**

The maximum junction temperature, $T_{J(max)}$ listed in the *Absolute Maximum Ratings*, is an additional limitation to prevent damage to the device. Do not violate any values listed in the *Absolute Maximum Ratings*. These limits are provided to prevent damage to the device.

#### 8.2.1.2 Input Considerations

Input signals must cross to be considered a logic LOW, and to be considered a logic HIGH. Do not exceed the maximum input voltage range found in the *Absolute Maximum Ratings*.

Unused inputs must be terminated to either $V_{CC}$ or ground. The unused inputs can be directly terminated if the input is completely unused, or they can be connected with a pull-up or pull-down resistor if the input will be used sometimes, but not always. A pull-up resistor is used for a default state of HIGH, and a pull-down resistor is used for a default state of LOW. The drive current of the controller, leakage current into the SN74LV4T86-EP (as specified in the *Electrical Characteristics*), and the desired input transition rate limits the resistor size. A 10-kΩ resistor value is often used due to these factors.

Refer to the *Feature Description* section for additional information regarding the inputs for this device.

#### 8.2.1.3 Output Considerations

The positive supply voltage is used to produce the output HIGH voltage. Drawing current from the output will decrease the output voltage as specified by the $V_{OH}$ specification in the *Electrical Characteristics*. The ground voltage is used to produce the output LOW voltage. Sinking current into the output will increase the output voltage as specified by the $V_{OL}$ specification in the *Electrical Characteristics*.

Push-pull outputs that could be in opposite states, even for a very short time period, should never be connected directly together. This can cause excessive current and damage to the device.

Two channels within the same device with the same input signals can be connected in parallel for additional output drive strength.

Unused outputs can be left floating. Do not connect outputs directly to $V_{CC}$ or ground.

Refer to the *Feature Description* section for additional information regarding the outputs for this device.


Copyright © 2023 Texas Instruments Incorporated

### 8.2.2 Detailed Design Procedure

1. Add a decoupling capacitor from $V_{CC}$ to GND. The capacitor needs to be placed physically close to the device and electrically close to both the $V_{CC}$ and GND pins. An example layout is shown in the *Layout* section.
2. Ensure the capacitive load at the output is ≤ 50 pF. This is not a hard limit; it will, however, optimize performance. This can be accomplished by providing short, appropriately sized traces from the SN74LV4T86-EP to one or more of the receiving devices.
3. Ensure the resistive load at the output is larger than ($V_{CC}$ / $I_{O(max)}$) Ω. Doing so will not violate the maximum output current from the Absolute Maximum Ratings. Most CMOS inputs have a resistive load measured in MΩ; much larger than the minimum calculated previously.
4. Thermal issues are rarely a concern for logic gates; the power consumption and thermal increase, however, can be calculated using the steps provided in the application report, *CMOS Power Consumption and Cpd Calculation*.

### 8.2.3 Application Curves

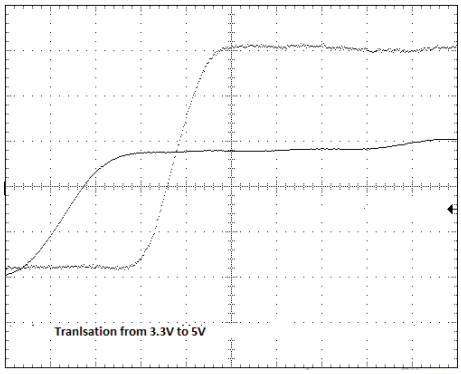


**Figure 8-2. Up Translation**

## 8.3 Power Supply Recommendations

The power supply can be any voltage between the minimum and maximum supply voltage rating located in the *Recommended Operating Conditions*. Each $V_{CC}$ terminal should have a good bypass capacitor to prevent power disturbance. A 0.1-µF capacitor is recommended for this device. It is acceptable to parallel multiple bypass capacitors to reject different frequencies of noise. The 0.1-µF and 1-µF capacitors are commonly used in parallel. The bypass capacitor should be installed as close to the power terminal as possible for best results, as shown in the following layout example.

## 8.4 Layout

### 8.4.1 Layout Guidelines

When using multiple-input and multiple-channel logic devices, inputs must never be left floating. In many cases, functions or parts of functions of digital logic devices are unused; for example, when only two inputs of a triple-input AND gate are used or only 3 of the 4 buffer gates are used. Such unused input pins must not be left unconnected because the undefined voltages at the outside connections result in undefined operational states. All unused inputs of digital logic devices must be connected to a logic high or logic low voltage, as defined by the input voltage specifications, to prevent them from floating. The logic level that must be applied to any particular unused input depends on the function of the device. Generally, the inputs are tied to GND or $V_{CC}$, whichever makes more sense for the logic function or is more convenient.

Copyright © 2023 Texas Instruments Incorporated

### 8.4.2 Layout Example

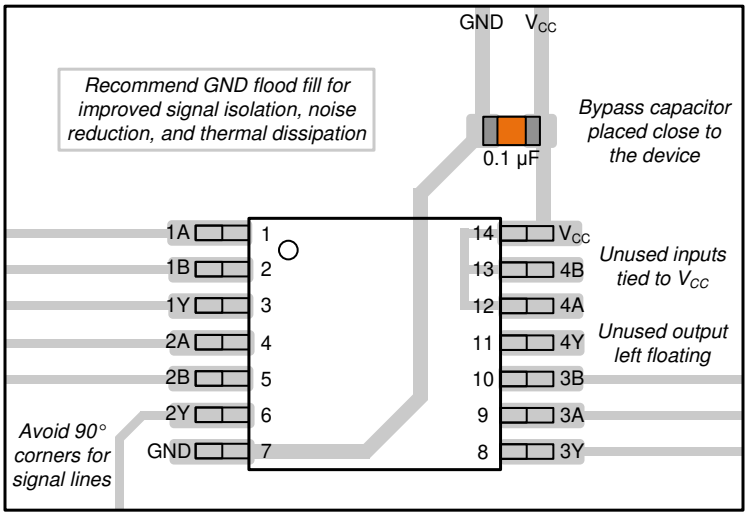


**Figure 8-3. Example Layout for the SN74LV4T86-EP**


Copyright © 2023 Texas Instruments Incorporated

# 9 Device and Documentation Support

## 9.1 Documentation Support

### 9.1.1 Related Documentation

For related documentation, see the following:

- Texas Instruments, *CMOS Power Consumption and Cpd Calculation*
- Texas Instruments, *Thermal Characteristics of Standard Linear and Logic (SLL) Packages and Devices*
- Texas Instruments, *Implications of Slow or Floating CMOS Inputs* application report

## 9.2 Receiving Notification of Documentation Updates

To receive notification of documentation updates, navigate to the device product folder on ti.com. Click on *Notifications* to register and receive a weekly digest of any product information that has changed. For change details, review the revision history included in any revised document.

## 9.3 Support Resources

TI E2E™ support forums are an engineer's go-to source for fast, verified answers and design help — straight from the experts. Search existing answers or ask your own question to get the quick design help you need.

Linked content is provided "AS IS" by the respective contributors. They do not constitute TI specifications and do not necessarily reflect TI's views; see TI's Terms of Use.

## 9.4 Trademarks

TI E2E™ is a trademark of Texas Instruments.
All trademarks are the property of their respective owners.

## 9.5 Electrostatic Discharge Caution



This integrated circuit can be damaged by ESD. Texas Instruments recommends that all integrated circuits be handled with appropriate precautions. Failure to observe proper handling and installation procedures can cause damage.

ESD damage can range from subtle performance degradation to complete device failure. Precision integrated circuits may be more susceptible to damage because very small parametric changes could cause the device not to meet its published specifications.

## 9.6 Glossary

| | |
|---|---|
| TI Glossary | This glossary lists and explains terms, acronyms, and definitions. |

# 10 Revision History

| DATE | REVSION | NOTES |
|---|---|---|
| November 2023 | * | Initial Release |

# 11 Mechanical, Packaging, and Orderable Information

The following pages include mechanical, packaging, and orderable information. This information is the most current data available for the designated devices. This data is subject to change without notice and revision of this document. For browser-based versions of this data sheet, refer to the left-hand navigation.

Copyright © 2023 Texas Instruments Incorporated

## PACKAGING INFORMATION

| Orderable part number | Status (1) | Material type (2) | Package \| Pins | Package qty \| Carrier | RoHS (3) | Lead finish/ Ball material (4) | MSL rating/ Peak reflow (5) | Op temp (°C) | Part marking (6) |
|---|---|---|---|---|---|---|---|---|---|
| SN74LV4T86PWREP | Active | Production | TSSOP (PW) \| 14 | 3000 \| LARGE T&R | Yes | NIPDAU | Level-1-260C-UNLIM | -55 to 125 | LV486EP |
| SN74LV4T86PWREP.A | Active | Production | TSSOP (PW) \| 14 | 3000 \| LARGE T&R | Yes | NIPDAU | Level-1-260C-UNLIM | -55 to 125 | LV486EP |
| V62/24607-01XE | Active | Production | TSSOP (PW) \| 14 | 3000 \| LARGE T&R | Yes | NIPDAU | Level-1-260C-UNLIM | -55 to 125 | LV486EP |

(1) **Status:** For more details on status, see our product life cycle.

(2) **Material type:** When designated, preproduction parts are prototypes/experimental devices, and are not yet approved or released for full production. Testing and final process, including without limitation quality assurance, reliability performance testing, and/or process qualification, may not yet be complete, and this item is subject to further changes or possible discontinuation. If available for ordering, purchases will be subject to an additional waiver at checkout, and are intended for early internal evaluation purposes only. These items are sold without warranties of any kind.

(3) **RoHS values:** Yes, No, RoHS Exempt. See the TI RoHS Statement for additional information and value definition.

(4) **Lead finish/Ball material:** Parts may have multiple material finish options. Finish options are separated by a vertical ruled line. Lead finish/Ball material values may wrap to two lines if the finish value exceeds the maximum column width.

(5) **MSL rating/Peak reflow:** The moisture sensitivity level ratings and peak solder (reflow) temperatures. In the event that a part has multiple moisture sensitivity ratings, only the lowest level per JEDEC standards is shown. Refer to the shipping label for the actual reflow temperature that will be used to mount the part to the printed circuit board.

(6) **Part marking:** There may be an additional marking, which relates to the logo, the lot trace code information, or the environmental category of the part.

Multiple part markings will be inside parentheses. Only one part marking contained in parentheses and separated by a "~" will appear on a part. If a line is indented then it is a continuation of the previous line and the two combined represent the entire part marking for that device.

**Important Information and Disclaimer:**The information provided on this page represents TI's knowledge and belief as of the date that it is provided. TI bases its knowledge and belief on information provided by third parties, and makes no representation or warranty as to the accuracy of such information. Efforts are underway to better integrate information from third parties. TI has taken and continues to take reasonable steps to provide representative and accurate information but may not have conducted destructive testing or chemical analysis on incoming materials and chemicals. TI and TI suppliers consider certain information to be proprietary, and thus CAS numbers and other limited information may not be available for release.

In no event shall TI's liability arising out of such information exceed the total purchase price of the TI part(s) at issue in this document sold by TI to Customer on an annual basis.

## TAPE AND REEL INFORMATION

**REEL DIMENSIONS**

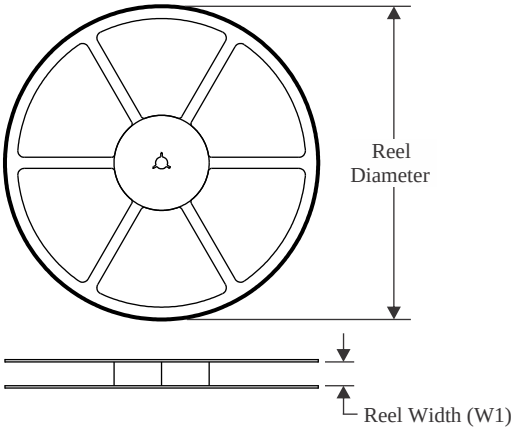


**TAPE DIMENSIONS**

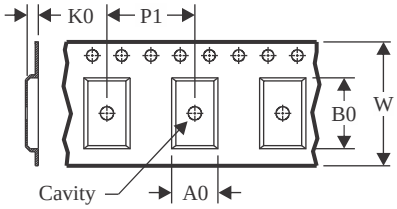


| | |
|---|---|
| A0 | Dimension designed to accommodate the component width |
| B0 | Dimension designed to accommodate the component length |
| K0 | Dimension designed to accommodate the component thickness |
| W | Overall width of the carrier tape |
| P1 | Pitch between successive cavity centers |

**QUADRANT ASSIGNMENTS FOR PIN 1 ORIENTATION IN TAPE**

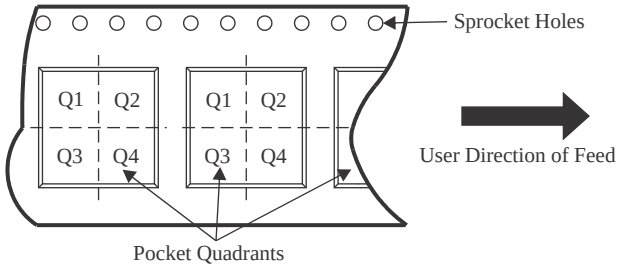


*All dimensions are nominal

| Device | Package Type | Package Drawing | Pins | SPQ | Reel Diameter (mm) | Reel Width W1 (mm) | A0 (mm) | B0 (mm) | K0 (mm) | P1 (mm) | W (mm) | Pin1 Quadrant |
|---|---|---|---|---|---|---|---|---|---|---|---|---|
| SN74LV4T86PWREP | TSSOP | PW | 14 | 3000 | 330.0 | 12.4 | 6.9 | 5.6 | 1.6 | 8.0 | 12.0 | Q1 |

TAPE AND REEL BOX DIMENSIONS

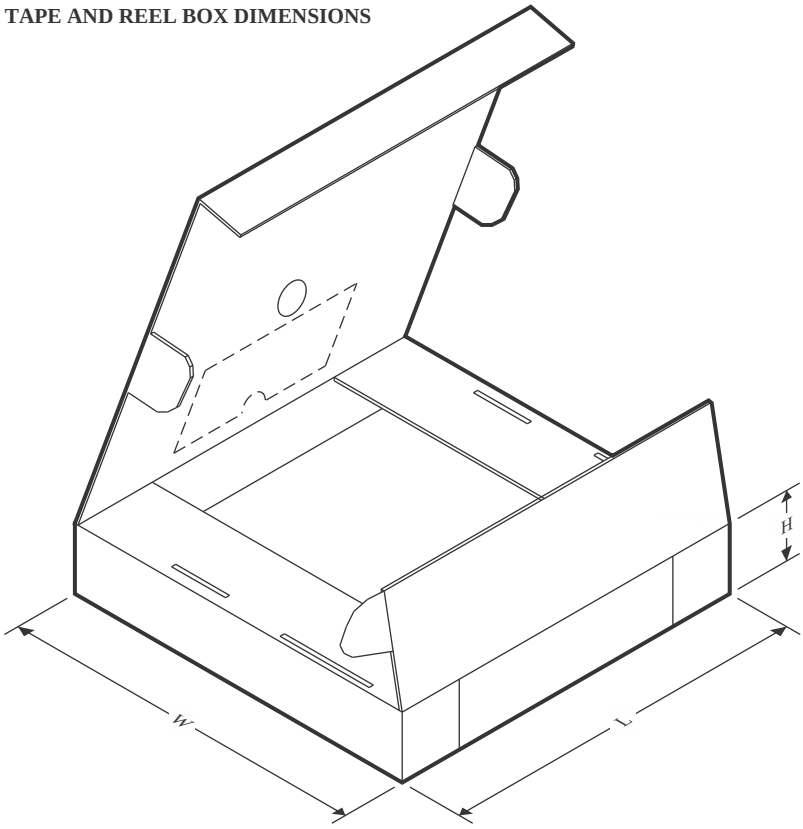


*All dimensions are nominal

| Device | Package Type | Package Drawing | Pins | SPQ | Length (mm) | Width (mm) | Height (mm) |
|---|---|---|---|---|---|---|---|
| SN74LV4T86PWREP | TSSOP | PW | 14 | 3000 | 353.0 | 353.0 | 32.0 |

# PACKAGE OUTLINE

## PW0014A

## TSSOP - 1.2 mm max height

SMALL OUTLINE PACKAGE

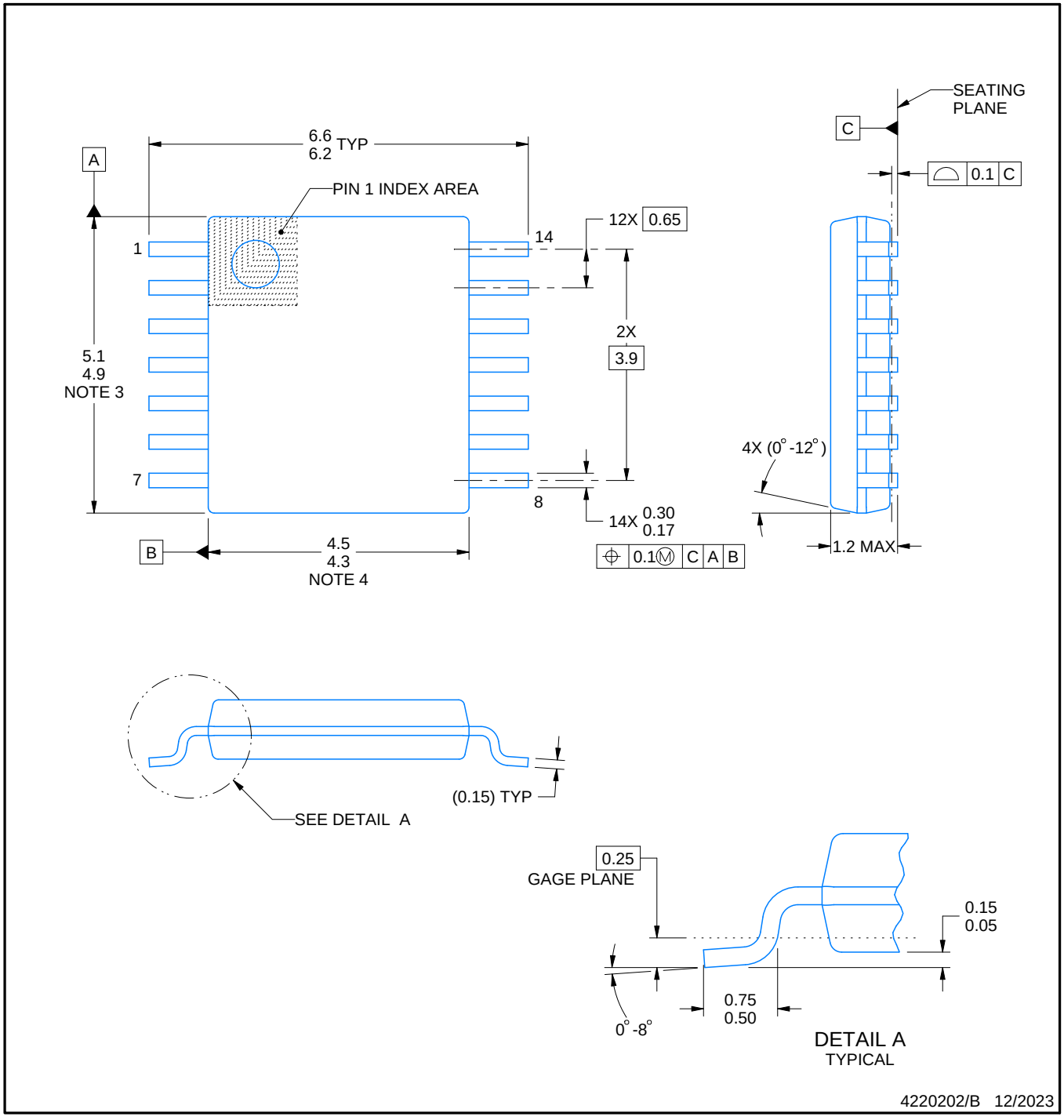


NOTES:

1. All linear dimensions are in millimeters. Any dimensions in parenthesis are for reference only. Dimensioning and tolerancing per ASME Y14.5M.
2. This drawing is subject to change without notice.
3. This dimension does not include mold flash, protrusions, or gate burrs. Mold flash, protrusions, or gate burrs shall not exceed 0.15 mm per side.
4. This dimension does not include interlead flash. Interlead flash shall not exceed 0.25 mm per side.
5. Reference JEDEC registration MO-153.

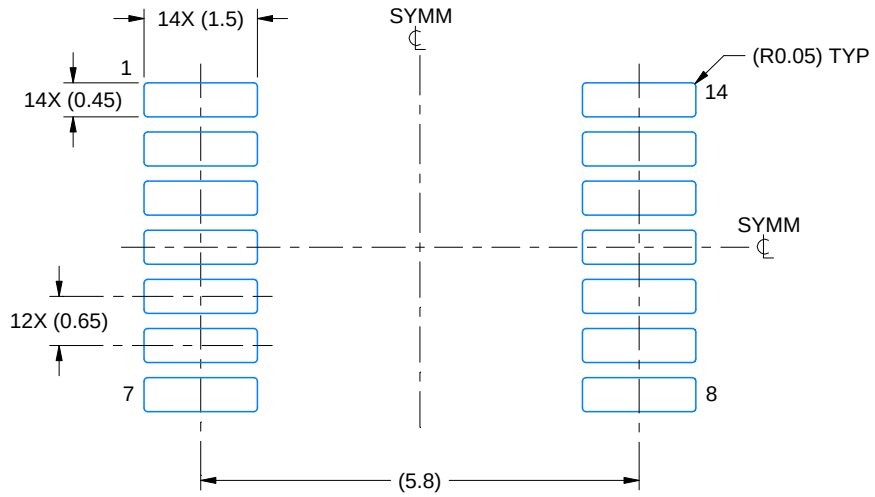


LAND PATTERN EXAMPLE
EXPOSED METAL SHOWN
SCALE: 10X

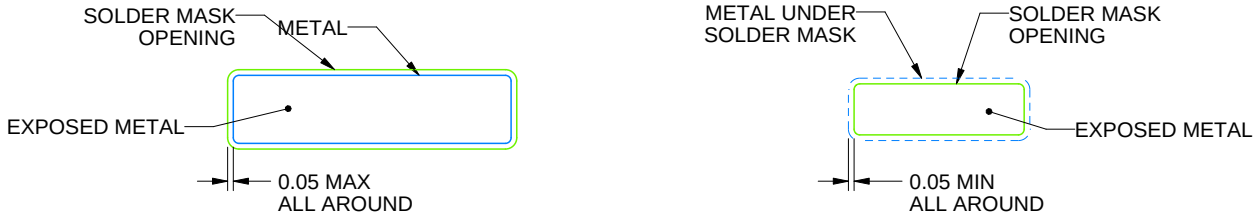


SOLDER MASK DETAILS

4220202/B 12/2023

NOTES: (continued)

6. Publication IPC-7351 may have alternate designs.
7. Solder mask tolerances between and around signal pads can vary based on board fabrication site.

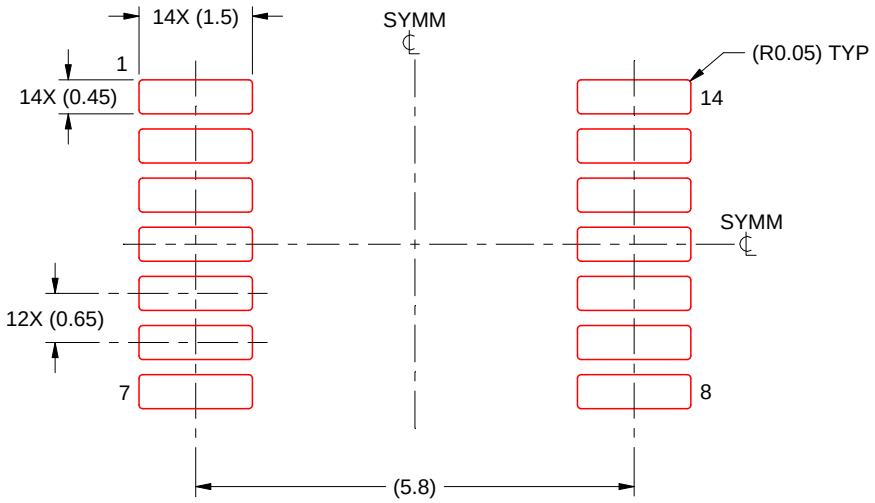


SOLDER PASTE EXAMPLE
BASED ON 0.125 mm THICK STENCIL
SCALE: 10X

4220202/B 12/2023

NOTES: (continued)

8. Laser cutting apertures with trapezoidal walls and rounded corners may offer better paste release. IPC-7525 may have alternate design recommendations.
9. Board assembly site may have different recommendations for stencil design.

# IMPORTANT NOTICE AND DISCLAIMER

TI PROVIDES TECHNICAL AND RELIABILITY DATA (INCLUDING DATASHEETS), DESIGN RESOURCES (INCLUDING REFERENCE DESIGNS), APPLICATION OR OTHER DESIGN ADVICE, WEB TOOLS, SAFETY INFORMATION, AND OTHER RESOURCES “AS IS” AND WITH ALL FAULTS, AND DISCLAIMS ALL WARRANTIES, EXPRESS AND IMPLIED, INCLUDING WITHOUT LIMITATION ANY IMPLIED WARRANTIES OF MERCHANTABILITY, FITNESS FOR A PARTICULAR PURPOSE OR NON-INFRINGEMENT OF THIRD PARTY INTELLECTUAL PROPERTY RIGHTS.

These resources are intended for skilled developers designing with TI products. You are solely responsible for (1) selecting the appropriate TI products for your application, (2) designing, validating and testing your application, and (3) ensuring your application meets applicable standards, and any other safety, security, regulatory or other requirements.

These resources are subject to change without notice. TI grants you permission to use these resources only for development of an application that uses the TI products described in the resource. Other reproduction and display of these resources is prohibited. No license is granted to any other TI intellectual property right or to any third party intellectual property right. TI disclaims responsibility for, and you fully indemnify TI and its representatives against any claims, damages, costs, losses, and liabilities arising out of your use of these resources.

TI’s products are provided subject to TI’s Terms of Sale, TI’s General Quality Guidelines, or other applicable terms available either on ti.com or provided in conjunction with such TI products. TI’s provision of these resources does not expand or otherwise alter TI’s applicable warranties or warranty disclaimers for TI products. Unless TI explicitly designates a product as custom or customer-specified, TI products are standard, catalog, general purpose devices.

TI objects to and rejects any additional or different terms you may propose.

Copyright © 2026, Texas Instruments Incorporated

Last updated 10/2025