PWP RHB

16-CHANNEL LED DRIVER WITH DOT CORRECTION AND GRAYSCALE PWM CONTROL

FEATURES

- **16 Channels**
- **12-bit (4096 Steps) Grayscale PWM Control**
- **Dot Correction**
  - **6 bit (64 Steps)**
- **Drive Capability (Constant-Current Sink)**
  - **0 mA to 80 mA**
- **LED Power Supply Voltage up to 17 V**
- **V_{CC} = 3.0 V to 5.5 V**
- **Serial Data Interface**
- **30-MHz Data Transfer Rate**
- **CMOS Level I/O**
- **Error Information**
  - **LOD: LED Open Detection**
  - **TEF: Thermal Error Flag**

APPLICATIONS

- **Monocolor, Multicolor, Full-Color LED Displays**
- **LED Signboards**
- **Display Back-lighting**

DESCRIPTION

The TLC5945 is a 16-channel, constant-current sink, LED driver. Each channel has an individually adjustable 4096-step grayscale PWM brightness control and a 64-step constant-current sink (dot correction). The dot correction adjusts the brightness variations between LED channels and other LED drivers. Both grayscale control and dot correction are accessible via a serial interface. A single external resistor sets the maximum current value of all 16 channels.

The TLC5945 features two error information circuits. The LED open detection (LOD) indicates a broken or disconnected LED at an output terminal. The thermal error flag (TEF) indicates an overtemperature condition.

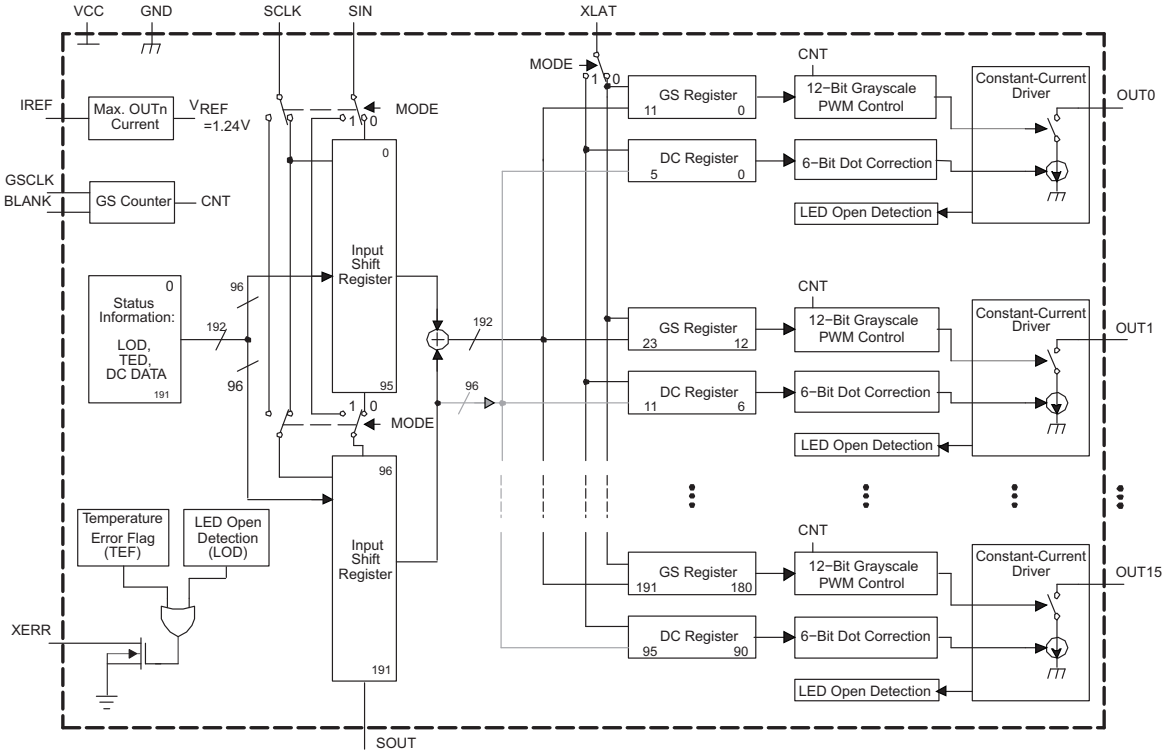

Please be aware that an important notice concerning availability, standard warranty, and use in critical applications of Texas Instruments semiconductor products and disclaimers thereto appears at the end of this data sheet.

PowerPAD is a trademark of Texas Instruments.

PRODUCTION DATA information is current as of publication date. Products conform to specifications per the terms of the Texas Instruments standard warranty. Production processing does not necessarily include testing of all parameters.

Copyright © 2007, Texas Instruments Incorporated

These devices have limited built-in ESD protection. The leads should be shorted together or the device placed in conductive foam during storage or handling to prevent electrostatic damage to the MOS gates.

ORDERING INFORMATION

T_A	PACKAGE(1)	PART NUMBER
–40°C to 85°C	28-pin HTSSOP PowerPAD™	TLC5945PWP
–40°C to 85°C	32-pin 5 mm x 5 mm QFN	TLC5945RHB

(1) For the most current package and ordering information, see the Package Option Addendum at the end of this document, or see the TI Web site at www.ti.com.

ABSOLUTE MAXIMUM RATINGS.

over operating free-air temperature range (unless otherwise noted)(1)

			UNIT
V_I	Input voltage range(2)	VCC	–0.3 V to 6 V
I_O	Output current (dc)		90 mA
V_I	Input voltage range	$V_{(BLANK)}$, $V_{(SCLK)}$, $V_{(XLAT)}$, $V_{(MODE)}$, $V_{(SIN)}$, $V_{(GSCLK)}$, $V_{(IREF)}$, $V_{(TEST)}$	–0.3 V to V_{CC} +0.3 V
V_O	Output voltage range	$V_{(SOUT)}$, $V_{(XERR)}$	–0.3 V to V_{CC} +0.3 V
		$V_{(OUT0)}$ to $V_{(OUT15)}$	–0.3 V to 18 V
	ESD rating	HBM (JEDEC JESD22-A114, Human Body Model)	2 kV
		CDM (JEDEC JESD22-C101, Charged Device Model)	500 V
T_{stg}	Storage temperature range		–55°C to 150°C
T_A	Operating ambient temperature range		–40°C to 85°C
	Package thermal impedance(3)	HTSSOP (PWP)(4)	31.58°C/W
		QFN (RHB)(4)	35.9°C/W

(1) Stresses beyond those listed under *absolute maximum ratings* may cause permanent damage to the device. These are stress ratings only, and functional operation of the device at these or any other conditions beyond those indicated under *recommended operating conditions* is not implied. Exposure to absolute maximum rated conditions for extended periods may affect device reliability.
(2) All voltage values are with respect to network ground terminal.
(3) The package thermal impedance is calculated in accordance with JESD 51-7.
(4) With PowerPAD soldered on PCB with 2-oz. trace of copper. See TI application report SLMA002 for further information.

RECOMMENDED OPERATING CONDITIONS

PARAMETER		TEST CONDITIONS	MIN	NOM	MAX	UNIT
DC Characteristics						
V_{CC}	Supply Voltage		3		5.5	V
V_O	Voltage applied to output (OUT0 - OUT15)				17	V
V_{IH}	High-level input voltage		0.8 V_{CC}		V_{CC}	V
V_{IL}	Low-level input voltage		GND		0.2 V_{CC}	V
I_{OH}	High-level output current	V_{CC} = 5 V at SOUT			–1	mA
I_{OL}	Low-level output current	V_{CC} = 5 V at SOUT, XERR			1	mA
I_{OLC}	Constant output current	OUT0 to OUT15			80	mA
T_A	Operating free-air temperature range		–40		85	°C
AC Characteristics V_{CC} = 3 V to 5.5 V, T_A = –40°C to 85°C (unless otherwise noted)						
$f_{(SCLK)}$	Data shift clock frequency	SCLK			30	MHz
$f_{(GSCLK)}$	Grayscale clock frequency	GSCLK			30	MHz
t_{wh0}/t_{wl0}	SCLK pulse duration	SCLK = H/L (See Figure 6)	16			ns
t_{wh1}/t_{wl1}	GSCLK pulse duration	GSCLK = H/L (See Figure 6)	16			ns
t_{wh2}	XLAT pulse duration	XLAT = H (See Figure 6)	20			ns
t_{wh3}	BLANK pulse duration	BLANK = H (See Figure 6)	20			ns
t_{su0}	Setup time	SIN - SCLK↑ (See Figure 6)	5			ns
t_{su1}		SCLK↓ - XLAT↑ (See Figure 6)	10			
t_{su2}		MODE↑↓ - SCLK↑ (See Figure 6)	10			
t_{su3}		MODE↑↓ - XLAT↑ (See Figure 6)	10			
t_{su4}		BLANK↓ - GSCLK↑ (See Figure 6)	10			
t_{su5}		XLAT↑ - GSCLK↑ (See Figure 6)	30			
t_{h0}	Hold Time	SCLK↑ - SIN (See Figure 6)	3			ns
t_{h1}		XLAT↓ - SCLK↑ (See Figure 6)	10			
t_{h2}		SCLK↑ - MODE↑↓ (See Figure 6)	10			
t_{h3}		XLAT↓ - MODE↑↓ (See Figure 6)	10			
t_{h4}		GSCLK↑ - BLANK↑ (See Figure 6)	10			

DISSIPATION RATINGS

PACKAGE	POWER RATING T_A < 25°C	DERATING FACTOR ABOVE T_A = 25°C	POWER RATING T_A = 70°C	POWER RATING T_A = 85°C
28-pin HTSSOP with PowerPAD™ soldered(1)	3958 mW	31.67 mW/°C	2533 mW	2058 mW
28-pin HTSSOP without PowerPAD™ soldered	2026 mW	16.21 mW/°C	1296 mW	1053 mW
32-pin QFN(1)	3482 mW	27.86 mW/°C	2228 mW	1811 mW

(1) The PowerPAD is soldered to the PCB with a 2-oz. copper trace. See application report SLMA002 for further information.

ELECTRICAL CHARACTERISTICS

V_{CC} = 3 V to 5.5 V, T_A = -40°C to 85°C (unless otherwise noted)

PARAMETER		TEST CONDITIONS	MIN	TYP	MAX	UNIT
V_{OH}	High-level output voltage	I_{OH} = –1 mA, SOUT	V_{CC} –0.5			V
V_{OL}	Low-level output voltage	I_{OL} = 1 mA, SOUT			0.5	V
I_I	Input current	V_I = V_{CC} or GND; BLANK, TEST, GSCLK, SCLK, SIN, XLAT pin	–1		1	µA
		V_I = GND; MODE pin	–1		1	
		V_I = V_{CC}; MODE pin			50	
I_{CC}	Supply current	No data transfer, all output OFF, V_O = 1 V, $R_{(IREF)}$ = 10 kΩ		0.9	6	mA
		No data transfer, all output OFF, V_O = 1 V, $R_{(IREF)}$ = 1.3 kΩ		5.2	12	
		Data transfer 30 MHz, all output ON, V_O = 1 V, $R_{(IREF)}$ = 1.3 kΩ		16	25	
		Data transfer 30 MHz, all output ON, V_O = 1 V, $R_{(IREF)}$ = 640 Ω		30	60	
$I_{O(LC)}$	Constant output current	All output ON, V_O = 1 V, $R_{(IREF)}$ = 640 Ω	54	61	69	mA
I_{lkg}	Leakage output current	All output OFF, V_O = 15 V, $R_{(IREF)}$ = 640 Ω , OUT0 to OUT15			0.1	µA
$\Delta I_{O(LC0)}$	Constant sink current error	All output ON, V_O = 1 V, $R_{(IREF)}$ = 640 Ω, OUT0 to OUT15, –20°C to 85°C (1)		±1	±4	%
		All output ON, V_O = 1 V, $R_{(IREF)}$ = 640 Ω, OUT0 to OUT15 (1)		±1	±8	
		All output ON, V_O = 1 V, $R_{(IREF)}$ = 480 Ω, OUT0 to OUT15, –20°C to 85°C (1)		±1	±6	
		All output ON, V_O = 1 V, $R_{(IREF)}$ = 480 Ω, OUT0 to OUT15 (1)		±1	±8	
$\Delta I_{O(LC1)}$	Constant sink current error	Device to device, averaged current from OUT0 to OUT15, $R_{(IREF)}$ = 1920 Ω (20 mA) (2)		–2, 0.4	±4	%
$\Delta I_{O(LC2)}$	Constant sink current error	Device to device, averaged current from OUT0 to OUT15, $R_{(IREF)}$ = 480 Ω (80 mA) (2)		–2.7, 2	±4	%
$\Delta I_{O(LC3)}$	Line regulation	All output ON, V_O = 1 V, $R_{(IREF)}$ = 640 Ω OUT0 to OUT15, V_{CC} = 3 V to 5.5 V (3)		±1	±4	%/V
		All output ON, V_O = 1 V, $R_{(IREF)}$ = 480 Ω OUT0 to OUT15, V_{CC} = 3 V to 5.5 V (3)		±1	±6	
$\Delta I_{O(LC4)}$	Load regulation	All output ON, V_O = 1 V to 3 V, $R_{(IREF)}$ = 640 Ω, OUT0 to OUT15 (4)		±2	±6	%/V
		All output ON, V_O = 1 V to 3 V, $R_{(IREF)}$ = 480 Ω, OUT0 to OUT15 (4)		±2	±8	
$T_{(TEF)}$	Thermal error flag threshold	Junction temperature (5)	150		170	°C
$V_{(LED)}$	LED open detection threshold			0.3	0.4	V
$V_{(IREF)}$	Reference voltage output	$R_{I(REF)}$ = 640 Ω	1.20	1.24	1.28	V

(1) The deviation of each output from the average of OUT0-15 constant current. It is calculated by Equation 1 in Table 1.
(2) The deviation of average of OUT1-15 constant current from the ideal constant-current value. It is calculated by Equation 2 in Table 1. The ideal current is calculated by Equation 3 in Table 1.
(3) The line regulation is calculated by Equation 4 in Table 1.
(4) The load regulation is calculated by Equation 5 in Table 1.
(5) Not tested. Specified by design.

Table 1. Test Parameter Equations

$\Delta(\%) = \frac{I_{OUTn} - I_{OUTavg_0-15}}{I_{OUTavg_0-15}} \times 100$	**(1)**
$\Delta(\%) = \frac{I_{OUTavg} - I_{OUT(IDEAL)}}{I_{OUT(IDEAL)}} \times 100$	**(2)**
$I_{OUT(IDEAL)} = 31.5 \times \left(\frac{1.24V}{R_{IREF}}\right)$	**(3)**
$\Delta(\%/V) = \frac{(I_{OUTn} \text{ at } V_{CC} = 5.5V) - (I_{OUTn} \text{ at } V_{CC} = 3.0V)}{(I_{OUTn} \text{ at } V_{CC} = 3.0V)} \times \frac{100}{2.5}$	(4)
$\Delta(\%/V) = \frac{(I_{OUTn} \text{ at } V_{OUTn} = 3.0V) - (I_{OUTn} \text{ at } V_{OUTn} = 1.0V)}{(I_{OUTn} \text{ at } V_{OUTn} = 1.0V)} \times \frac{100}{2.0}$	(5)

SWITCHING CHARACTERISTICS

V_{CC} = 3 V to 5.5 V, C_L = 15 pF, T_A = –40°C to 85°C (unless otherwise noted)

PARAMETER		TEST CONDITIONS	MIN	TYP	MAX	UNIT
t_{r0}	Rise time	SOUT			16	ns
t_{r1}		OUTn, V_{CC} = 5 V, T_A = 60°C, DCn = 3Fh		10	30	
t_{f0}	Fall time	SOUT			16	ns
t_{f1}		OUTn, V_{CC} = 5 V, T_A = 60°C, DCn = 3Fh		10	30	
t_{pd0}	Propagation delay time	SCLK - SOUT (see Figure 6)			30	ns
t_{pd1}		BLANK - OUTn (see Figure 6)			60	ns
t_{pd2}		OUTn - XERR (see Figure 6)			1000	ns
t_{pd3}		GSCLK - OUTn (see Figure 6)			60	ns
t_{pd4}		XLAT - I_{OUT} (dot correction) (see Figure 6)			1000	ns
t_{on_err}	Output on-time error	t_{outon}– T_{gsclk} (see Figure 6), GSn = 01h	–12	–3	0	ns

DEVICE INFORMATION

PWP PACKAGE
(TOP VIEW)

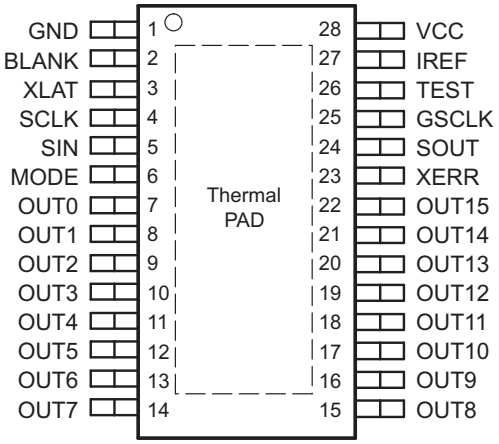

RHB PACKAGE
(TOP VIEW)

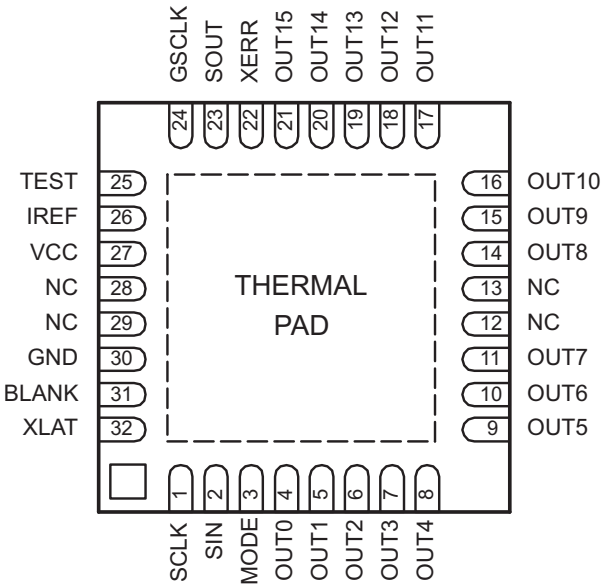

NC − No internal connection

TERMINAL FUNCTION

TERMINAL			I/O	DESCRIPTION
NAME	PWP	RHB		
BLANK	2	31	I	Blank all outputs. When BLANK = H, all OUTn outputs are forced OFF. GS counter is also reset. When BLANK = L, OUTn are controlled by grayscale PWM control.
GND	1	30	G	Ground
GSCLK	25	24	I	Reference clock for grayscale PWM control
IREF	27	26	I/O	Reference current terminal
NC	-	12, 13, 28, 29		No connection
OUT0	7	4	O	Constant-current output
OUT1	8	5	O	Constant-current output
OUT2	9	6	O	Constant-current output
OUT3	10	7	O	Constant-current output
OUT4	11	8	O	Constant-current output
OUT5	12	9	O	Constant-current output
OUT6	13	10	O	Constant-current output
OUT7	14	11	O	Constant-current output
OUT8	15	14	O	Constant-current output
OUT9	16	15	O	Constant-current output
OUT10	17	16	O	Constant-current output
OUT11	18	17	O	Constant-current output
OUT12	19	18	O	Constant-current output
OUT13	20	19	O	Constant-current output
OUT14	21	20	O	Constant-current output
OUT15	22	21	O	Constant-current output
SCLK	4	1	I	Serial data shift clock
SIN	5	2	I	Serial data input

DEVICE INFORMATION (continued)

TERMINAL FUNCTION (continued)

TERMINAL			I/O	DESCRIPTION
NAME	PWP	RHB		
SOUT	24	23	O	Serial data output
TEST	26	25	I	Test pin: TEST must be connected to VCC.
VCC	28	27	I	Power supply voltage.
MODE	6	3	I	Input mode-change pin. When MODE = GND, the device is in GS mode. When MODE = V_{CC}, the device is in DC mode.
XERR	23	22	O	Error output. XERR is an open-drain terminal. XERR goes L when LOD or TEF is detected.
XLAT	3	32	I	Level triggered latch signal. When XLAT = high, the TLC5945 writes data from the input shift register to either GS register (MODE = low) or DC register (MODE = high). When XLAT=low, the data in the GS or DC registers is held constant and does not change.

PARAMETER MEASUREMENT INFORMATION

PIN EQUIVALENT INPUT AND OUTPUT SCHEMATIC DIAGRAMS

Resistor values are equivalent resistance and not tested.

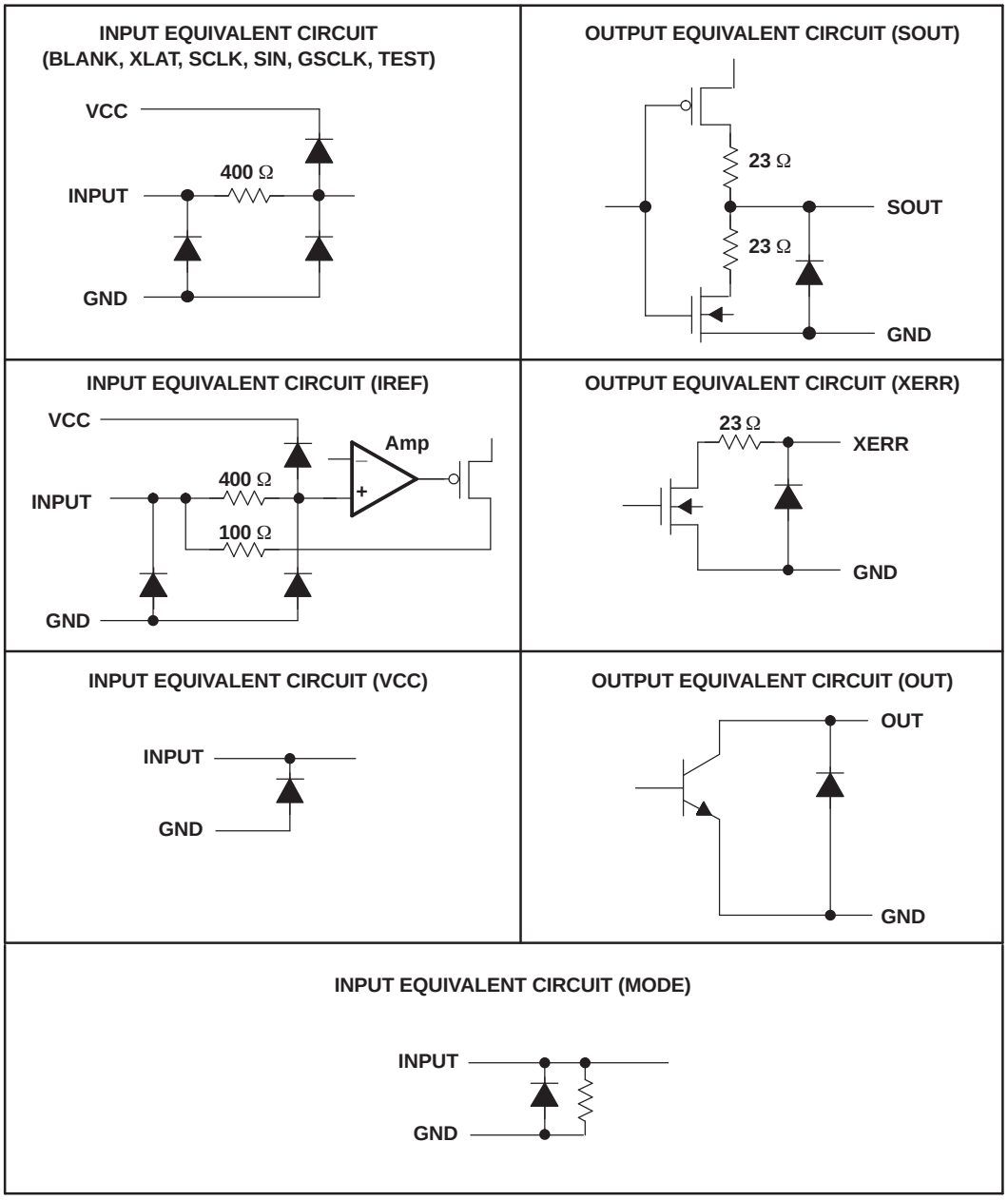

Figure 1. Input and Output Equivalent Circuits

PARAMETER MEASUREMENT INFORMATION (continued)

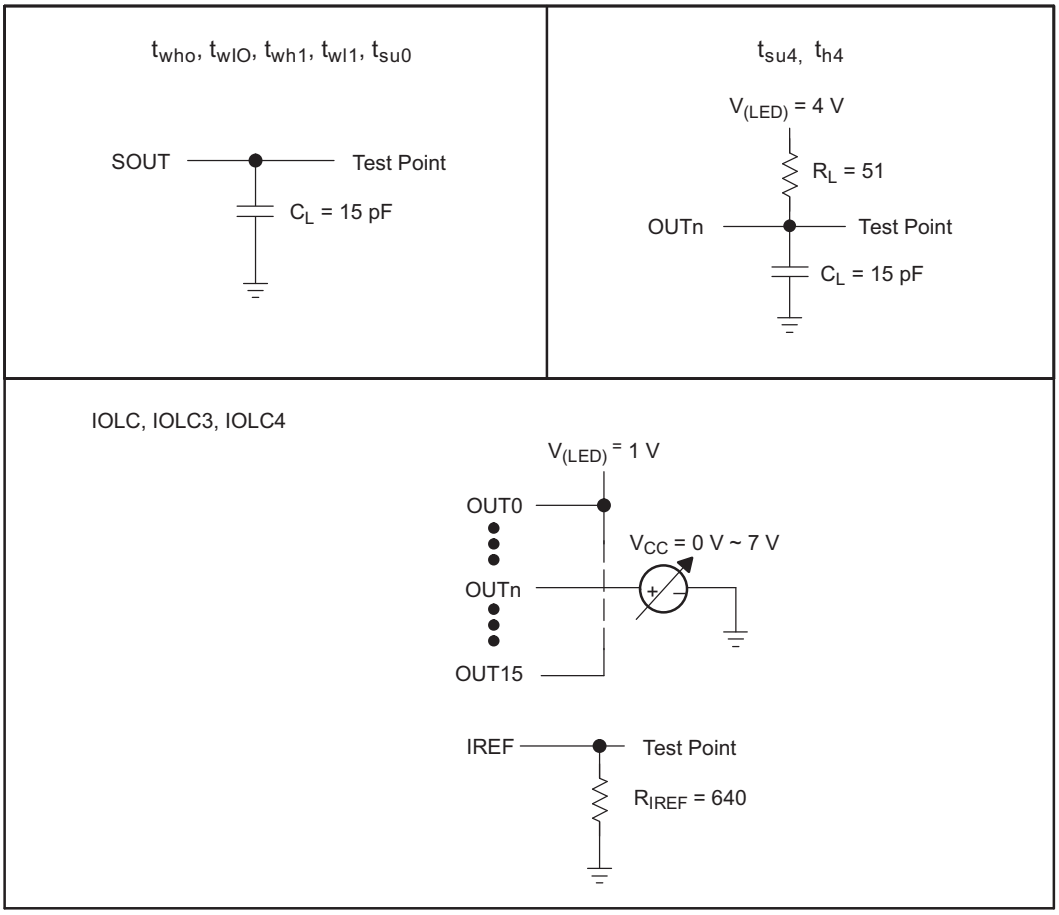

Figure 2. Parameter Measurement Circuits

Typical Characteristics

REFERENCE RESISTOR vs OUTPUT CURRENT

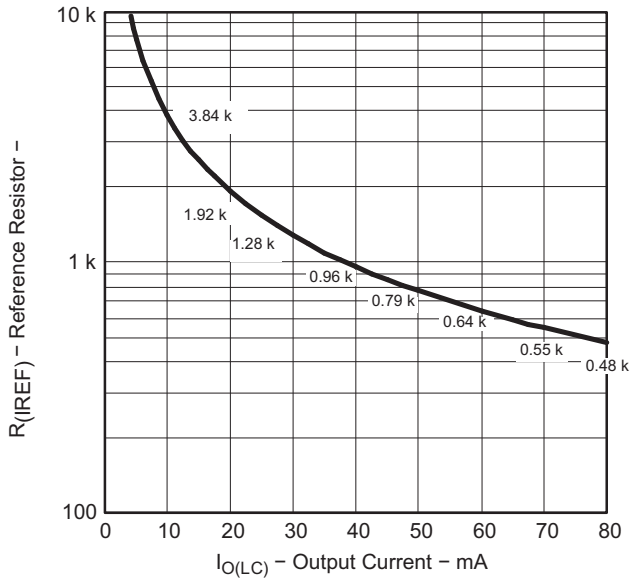

Figure 3.

POWER DISSIPATION RATE vs FREE-AIR TEMPERATURE

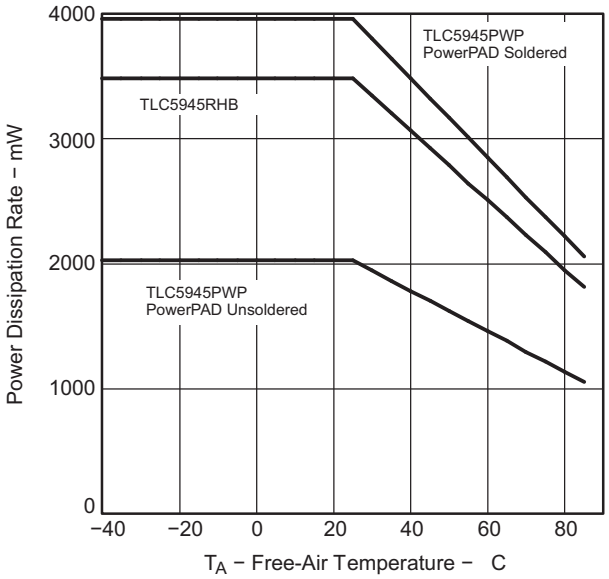

Figure 4.

OUTPUT CURRENT vs OUTPUT VOLTAGE

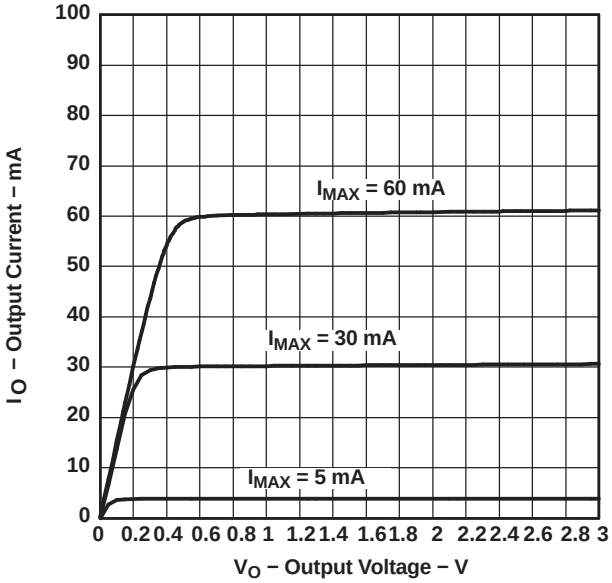

Figure 5.

PRINCIPLES OF OPERATION

SERIAL INTERFACE

The TLC5945 has a flexible serial interface, which can be connected to microcontrollers or digital signal processors in various ways. Only 3 pins are needed to input data into the device. The rising edge of SCLK signal shifts the data from the SIN pin to the internal register. After all data is clocked in, a high-level pulse of XLAT signal latches the serial data to the internal registers. The internal registers are level-triggered latches of XLAT signal. All data are clocked in with the MSB first. The length of serial data is 96 bit or 192 bit, depending on the programming mode. Grayscale data and dot correction data can be entered during a grayscale cycle. Although new grayscale data can be clocked in during a grayscale cycle, the XLAT signal should only latch the grayscale data at the end of the grayscale cycle. Latching in new grayscale data immediately overwrites the existing grayscale data. Figure 6 shows the timing chart. More than two TLC5945s can be connected in series by connecting an SOUT pin from one device to the SIN pin of the next device. An example of cascading two TLC5945s is shown in Figure 7. The SOUT pin can also be connected to the controller to receive status information from TLC5945 as shown in Figure 16.

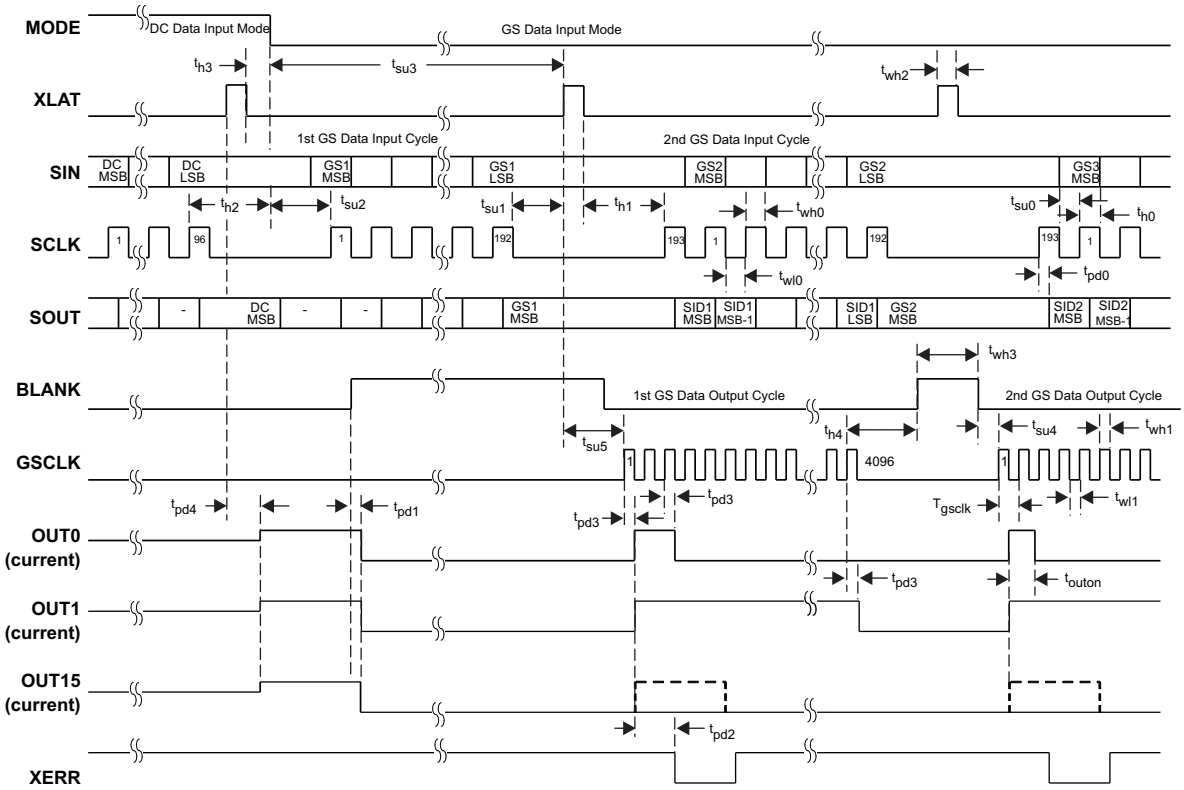

Figure 6. Serial Data Input Timing Chart

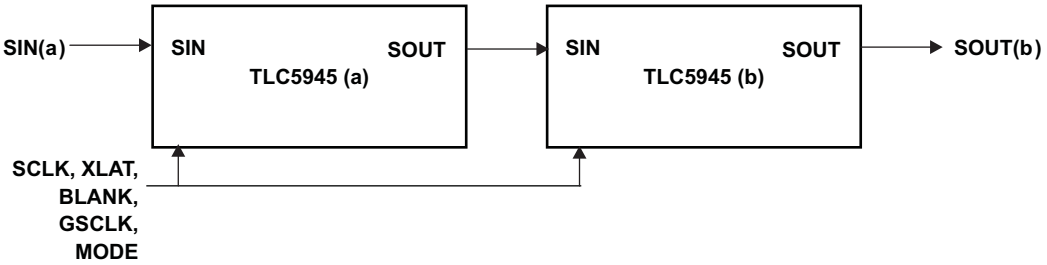

Figure 7. Cascading Two TLC5945 Devices

PRINCIPLES OF OPERATION (continued)

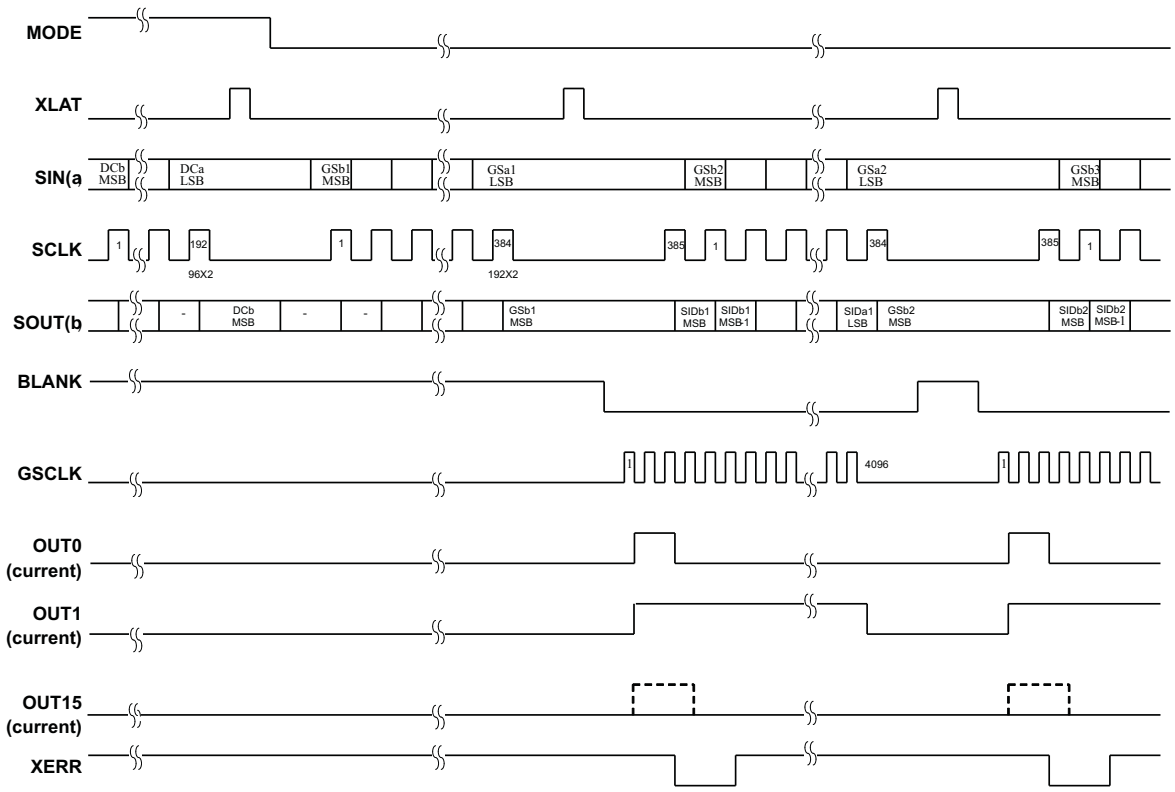

Figure 8. Timing Chart for Two Cascaded TLC5945 Devices

ERROR INFORMATION OUTPUT

The open-drain output XERR is used to report both of the TLC5945 error flags, TEF and LOD. During normal operating conditions, the internal transistor connected to the XERR pin is turned off. The voltage on XERR is pulled up to V_{CC} through an external pullup resistor. If TEF or LOD is detected, the internal transistor is turned on, and XERR is pulled to GND. Because XERR is an open-drain output, multiple ICs can be ORed together and pulled up to V_{CC} with a single pullup resistor. This reduces the number of signals needed to report a system error (see Figure 16).

To differentiate LOD and TEF signal from XERR pin, LOD can be masked out with BLANK = HIGH.

Table 2. XERR Truth Table

ERROR CONDITION		ERROR INFORMATION		SIGNALS	
TEMPERATURE	OUTn VOLTAGE	TEF	LOD	BLANK	XERR
$T_J < T_{(TEF)}$	Don't Care	L	X	H	H
$T_J > T_{(TEF)}$	Don't Care	H	X		L
$T_J < T_{(TEF)}$	OUTn > $V_{(LED)}$	L	L	L	H
	OUTn < $V_{(LED)}$	L	H		L
$T_J > T_{(TEF)}$	OUTn > $V_{(LED)}$	H	L		L
	OUTn < $V_{(LED)}$	H	H		L

TEF: THERMAL ERROR FLAG

The TLC5945 provides a temperature error flag (TEF) circuit to indicate an overtemperature condition of the IC. If the junction temperature exceeds the threshold temperature (160°C typical), TEF becomes H and XERR pin goes to low level. When the junction temperature becomes lower than the threshold temperature, TEF becomes L and XERR pin becomes high impedance. TEF status can also be read out from the TLC5945 status register.

LOD: LED OPEN DETECTION

The TLC5945 has an LED-open detection circuit that detects broken or disconnected LED's. The LED open detector pulls the XERR pin to GND when an open LED is detected. XERR and the corresponding error bit in the Status Information Data is only active under the following open LED conditions.

1. OUTn is on and the time tpd2 (1 µs typical) has passed.
2. The voltage of OUTn is < 0.3V (typical)

The LOD status of each output can be also read out from the SOUT pin. See the *STATUS INFORMATION OUTPUT* section for details. The LOD error bits are latched into the Status Information Data when XLAT returns to a low after a high. Therefore, the XLAT pin must be pulsed high then low while XERR is active in order to latch the LOD error into the Status Information Data for subsequent reading via the serial shift register.

OUTPUT ENABLE

All OUTn channels of the TLC5945 can be switched off with one signal. When BLANK is set high, all OUTn channels are disabled, regardless of logic operations of the device. The grayscale counter is also reset. When BLANK is set low, all OUTn channels operate normally. If BLANK goes low and then back high before the grayscale counter reaches 4095, all outputs turn on for their programmed number of grayscale clocks, or the length of time the that the BLANK signal was low, whichever is lower. For example, if all outputs are programmed to turn on for 1 ms, but the BLANK signal is only low for 200 ns, all outputs turn on for 200 ns.

Table 3. BLANK Signal Truth Table

BLANK	OUT0 - OUT15
LOW	Normal condition
HIGH	Disabled

SETTING MAXIMUM CHANNEL CURRENT

The maximum output current per channel is programmed by a single resistor, $R_{(IREF)}$, which is placed between IREF pin and GND pin. The voltage on IREF is set by an internal band gap $V_{(IREF)}$ with a typical value of 1.24 V. The maximum channel current is equivalent to the current flowing through $R_{(IREF)}$ multiplied by a factor of 31.5. The maximum output current can be calculated by Equation 6:

$$I_{max} = \frac{V_{(IREF)}}{R_{(IREF)}} \times 31.5 \tag{6}$$

where:

$V_{(IREF)}$ = 1.24 V

$R_{(IREF)}$ = User-selected external resistor.

I_{max} must be set between 5 mA and 80 mA. The output current may be unstable if I_{max} is set lower than 5 mA. Output currents lower than 5 mA can be achieved by setting Imax to 5 mA or higher and then using dot correction.

Figure 3 shows the maximum output current I_O versus $R_{(IREF)}$. $R_{(IREF)}$ is the value of the resistor between IREF terminal to GND, and I_O is the constant output current of OUT0 to OUT15. A variable power supply may be connected to the IREF pin through a resistor to change the maximum output current per channel. The maximum output current per channel is 31.5 times the current flowing out of the IREF pin.

POWER DISSIPATION CALCULATION

The device power dissipation needs to be below the power dissipation rate of the device package to ensure correct operation. Equation 7 calculates the power dissipation of device:

$$P_D = \left(V_{CC} \times I_{CC}\right) + \left(V_{OUT} \times I_{MAX} \times N \times \frac{DC_n}{63} \times d_{PWM}\right) \tag{7}$$

where:

V_{CC}: device supply voltage

I_{CC}: device supply current

V_{OUT}: TLC5945 OUTn voltage when driving LED current

I_{MAX}: LED current adjusted by $R_{(IREF)}$ Resistor

DC_n: maximum dot correction value for OUTn

N: number of OUTn driving LED at the same time

d_{PWM}: duty cycle defined by BLANK pin or GS PWM value

OPERATING MODES

The TLC5945 has two operating modes defined by MODE as shown in Table 4. The GS and DC registers are set to random values that are not known just after power on. The GS and DC values must be programmed before turning on the outputs. Please note that when initially setting GS and DC data after power on, the GS data must be set before the DC data is set. Failure to set GS data before DC data may result in the first bit of GS data being lost. XLAT must be low when the MODE pin goes high-to-low or low-to-high to change back and forth between GS mode and DC mode.

Table 4. TLC5945 Operating Modes Truth Table

MODE	INPUT SHIFT REGISTER	OPERATING MODE
GND	192 bit	Grayscale PWM Mode
V_{CC}	96 bit	Dot Correction Data Input Mode

SETTING DOT CORRECTION

The TLC5945 has the capability to fine-adjust the output current of each channel (OUT0 to OUT15) independently. This is also called dot correction. This feature is used to adjust the brightness deviations of LEDs connected to the output channels OUT0 to OUT15. Each of the 16 channels can be programmed with a 6-bit word. The channel output can be adjusted in 64 steps from 0% to 100% of the maximum output current I_{max}. The TEST pin must be connected to VCC to ensure proper operation of the dot correction circuitry. Equation 8 determines the output current for each output n:

$$I_{OUTn} = I_{max} \times \frac{DCn}{63} \tag{8}$$

where:

I_{max} = the maximum programmable output current for each output.

DCn = the programmed dot correction value for output n (DCn = 0 to 63).

n = 0 to 15

Figure 9 shows the dot correction data packet format which consists of 6 bits x 16 channel, total 96 bits. The format is Big-Endian format. This means that the MSB is transmitted first, followed by the MSB-1, etc. The DC 15.5 in Figure 9 stands for the 5th-most significant bit for output 15.

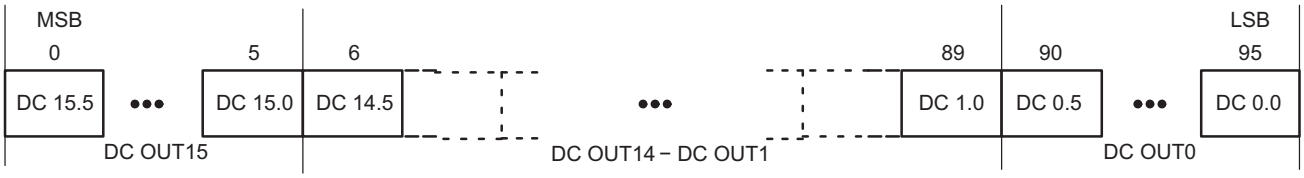

Figure 9. Dot Correction Data Packet Format

When MODE is set to VCC, the TLC5945 enters the dot correction data input mode. The length of input shift register becomes 96bits. After all serial data are shifted in, the TLC5945 writes the data in the input shift register to DC register when XLAT is high, and holds the data in the DC register when XLAT is low. The DC register is a level triggered latch of XLAT signal. Since XLAT is a level-triggered signal, SCLK and SIN must not be changed while XLAT is high. After XLAT goes low, data in the DC register is latched and does not change. BLANK signal does not need to be high to latch in new data. When XLAT goes high, the new dot-correction data immediately becomes valid and changes the output currents if BLANK is low. XLAT has setup time (tsu1) and hold time (th1) to SCLK as shown in Figure 6.

To input data into the dot correction register, MODE must be set to V_{CC}. The internal input shift register is then set to 96-bit width. After all serial data are clocked in, a rising edge of XLAT is used to latch the data into the dot correction register. Figure 10 shows the dc data input timing chart.

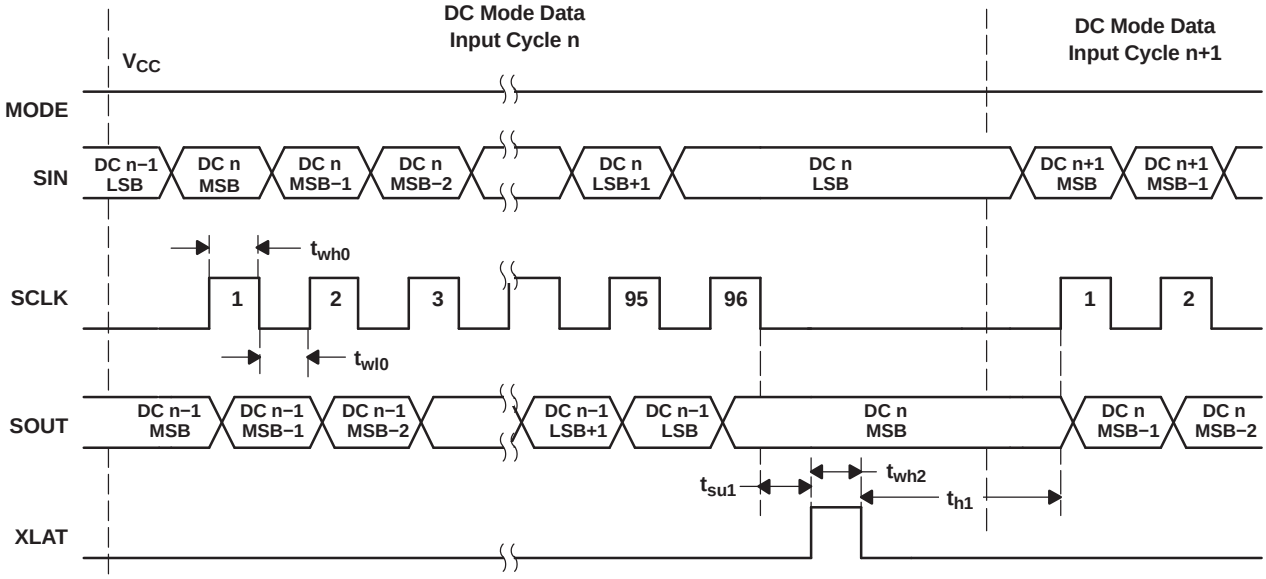

Figure 10. Dot Correction Data Input Timing Chart

SETTING GRAYSCALE

The TLC5945 can adjust the brightness of each channel OUTn using a PWM control scheme. The use of 12 bits per channel results in 4096 different brightness steps, from 0% to 100% brightness. Equation 9 determines the brightness level for each output n:

$$\text{Brightness in } \% = \frac{GSn}{4095} \times 100 \tag{9}$$

where:

GSn = the programmed grayscale value for output n (GSn = 0 to 4095)

n = 0 to 15

Grayscale data for all OUTn

The input shift register enters grayscale data into the grayscale register for all channels simultaneously. The complete grayscale data format consists of 16 x 12 bit words, which forms a 192-bit wide data packet (see Figure 11). The data packet must be clocked in with the MSB first.

Figure 11. Grayscale Data Packet Format

When MODE is set to GND, the TLC5945 enters the grayscale data input mode. The device switches the input shift register to 192-bit width. After all data is clocked in, a rising edge of the XLAT signal latches the data into the grayscale register (see Figure 12). New grayscale data immediately becomes valid at the rising edge of the XLAT signal; therefore, new grayscale data should be latched at the end of a grayscale cycle when BLANK is high. The first GS data input cycle after dot correction requires an additional SCLK pulse after the XLAT signal to complete the grayscale update cycle. All GS data in the input shift register is replaced with status information data (SID) after updating the grayscale register.

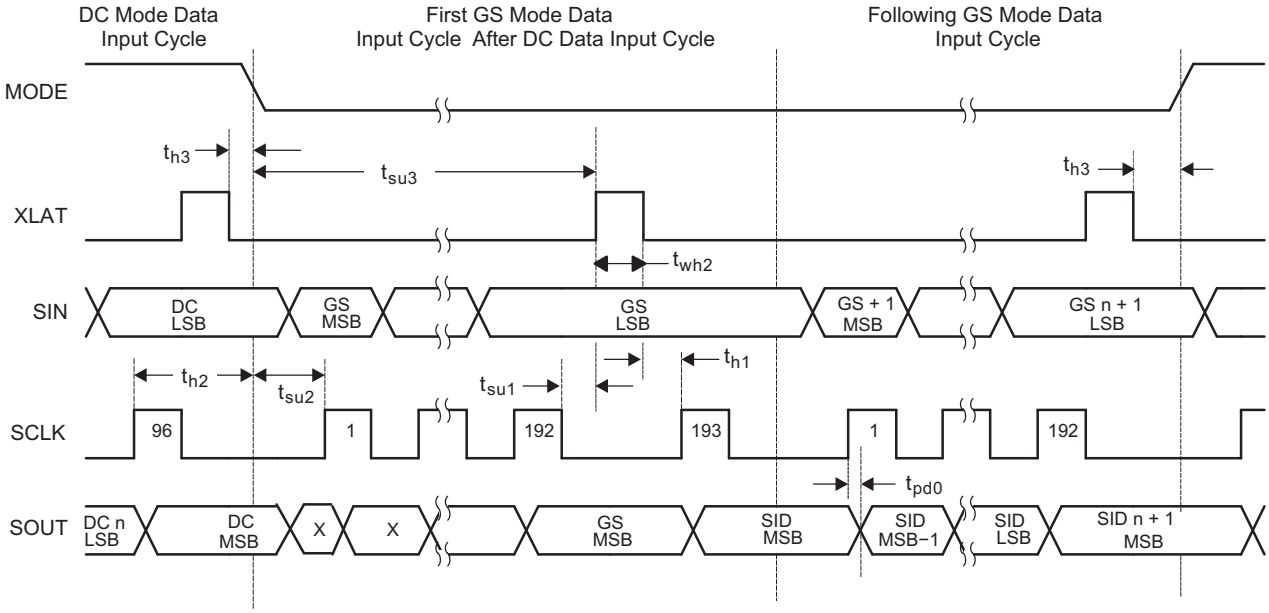

Figure 12. Grayscale Data Input Timing Chart

STATUS INFORMATION OUTPUT

The TLC5945 does have a status information register, which can be accessed in grayscale mode (MODE = GND). After the XLAT signal latches the data into the GS register, the input shift register data is replaced with status information data (SID) of the device (see Figure 12). LOD, TEF, and dot-correction register data can be read out at the SOUT pin. The status information data packet is 192 bits wide. Bits 0 – 15 contain the LOD status of each channel. Bit 16 contains the TEF status. Bits 24 – 119 contain the data of the dot-correction register. The remaining bits are reserved. The complete status information data packet is shown in Figure 13.

SOUT outputs the MSB of the SID at the same time the SID are stored in the SID register, as shown in

Figure 14. The next SCLK pulse, which will be the clock for receiving the MSB of the next grayscale data, transmits MSB-1 of SID. If output voltage is < 0.3 V (typical) when the output sink current turns on, LOD status flag becomes active. The LOD status flag is an internal signal which pulls XERR pin down to low when the LOD status flag becomes active. The delay time, tpd2 (1 µs maximum), is from the time of turning on the output sink current to the time LOD status flag becomes valid.

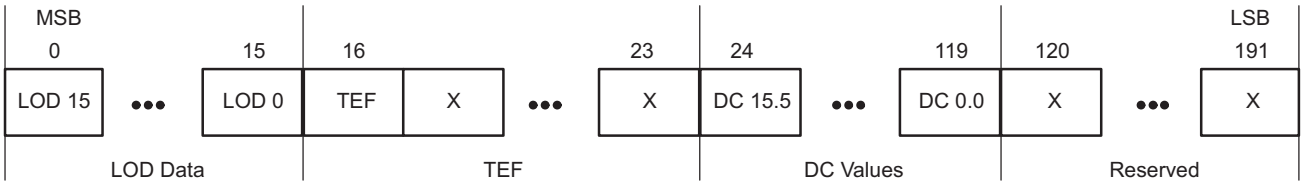

Figure 13. Status Information Data Packet Format

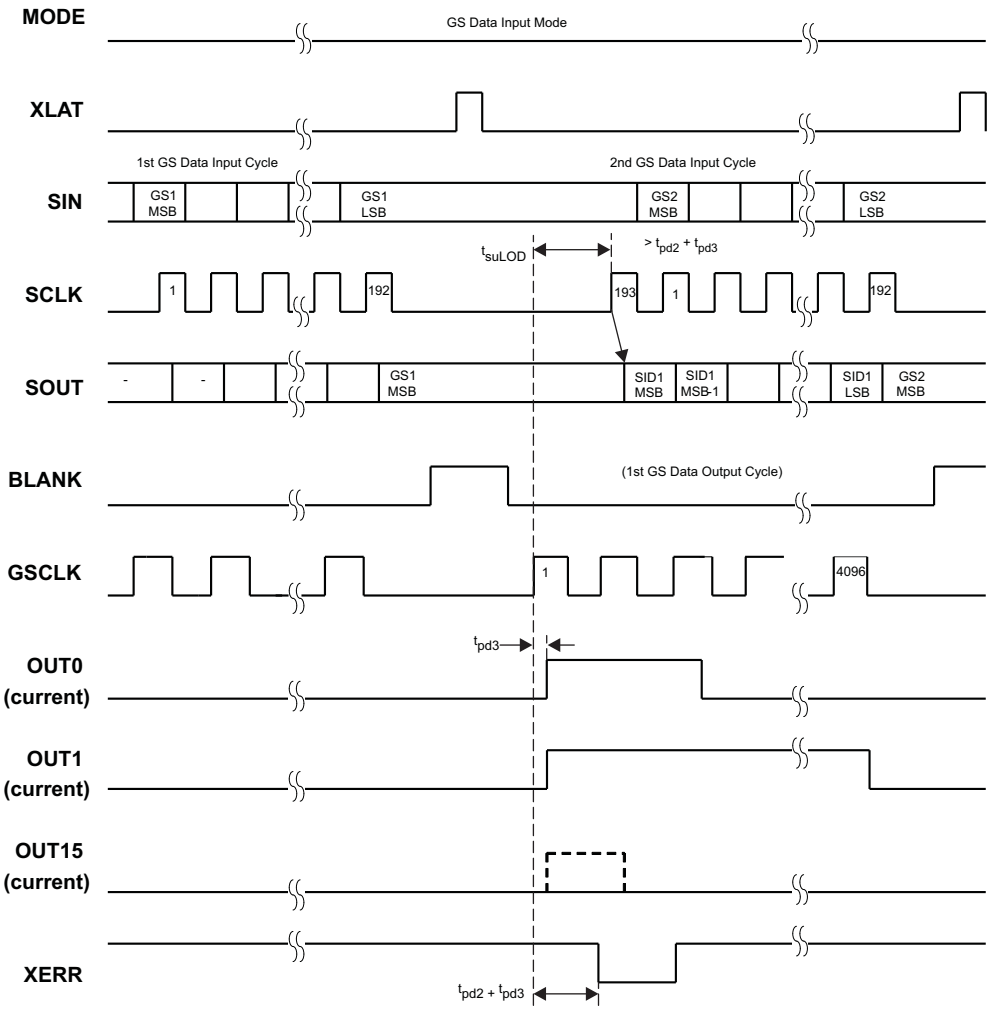

Figure 14. Readout Status Information Data (SID) Timing Chart

GRAYSCALE PWM OPERATION

The grayscale PWM cycle starts with the falling edge of BLANK. The first GSCLK pulse after BLANK goes low increases the grayscale counter by one and switches on all OUTn with grayscale value not zero. Each following rising edge of GSCLK increases the grayscale counter by one. The TLC5945 compares the grayscale value of

each output OUTn with the grayscale counter value. All OUTn with grayscale values equal to the counter values are switched off. A BLANK=H signal after 4096 GSCLK pulses resets the grayscale counter to zero and completes the grayscale PWM cycle (see Figure 15). When the counter reaches a count of FFFh, the counter stops counting and all outputs turn off. Pulling BLANK high before the counter reaches FFFh immediately resets the counter to zero.

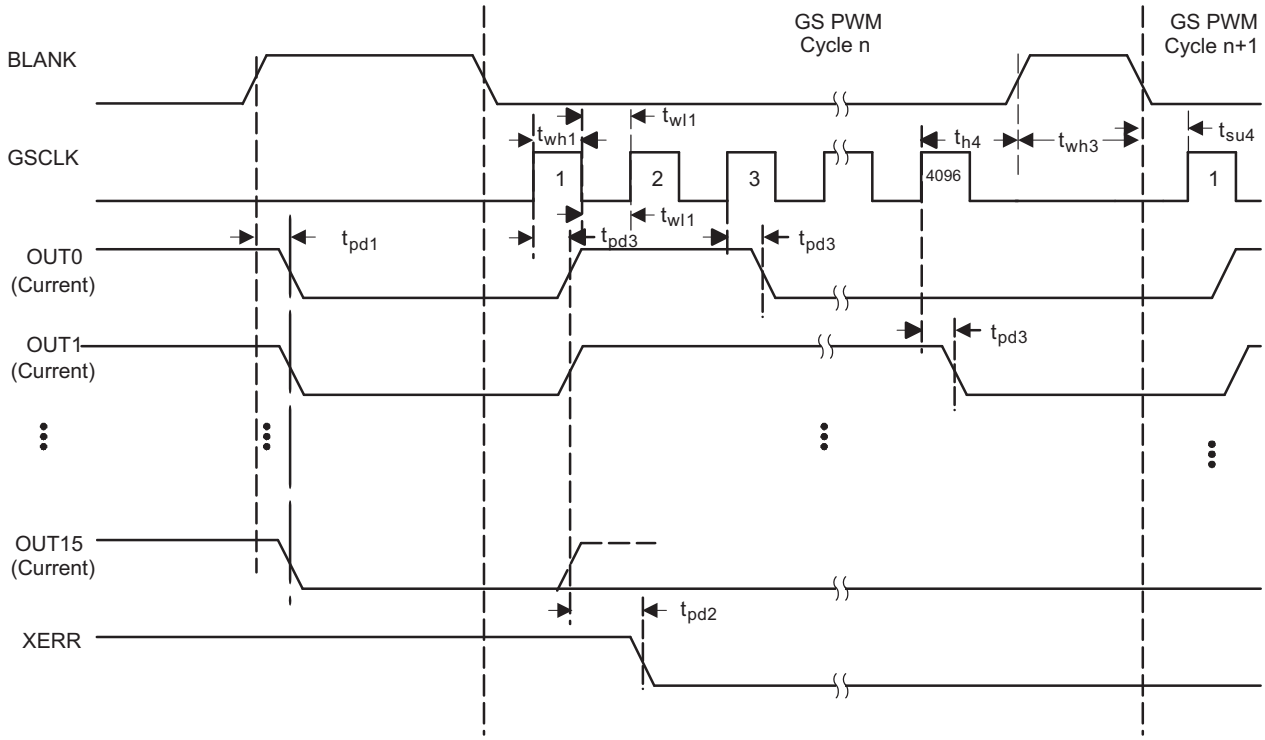

Figure 15. Grayscale PWM Cycle Timing Chart

SERIAL DATA TRANSFER RATE

Figure 16 shows a cascading connection of *n* TLC5945 devices connected to a controller, building a basic module of an LED display system. There is no TLC5945 limitation to the maximum number of ICs that can be cascaded. The maximum number of cascading TLC5945 devices depends on the application system and is in the range of 40 devices. Equation 10 calculates the minimum frequency needed:

$$f_{(GSCLK)} = 4096 \times f_{(update)}$$

$$f_{(SCLK)} = 193 \times f_{(update)} \times n \tag{10}$$

where:

$f_{(GSCLK)}$: minimum frequency needed for GSCLK

$f_{(SCLK)}$: minimum frequency needed for SCLK and SIN

$f_{(update)}$: update rate of whole cascading system

n: number cascaded of TLC5945 device

Application Example

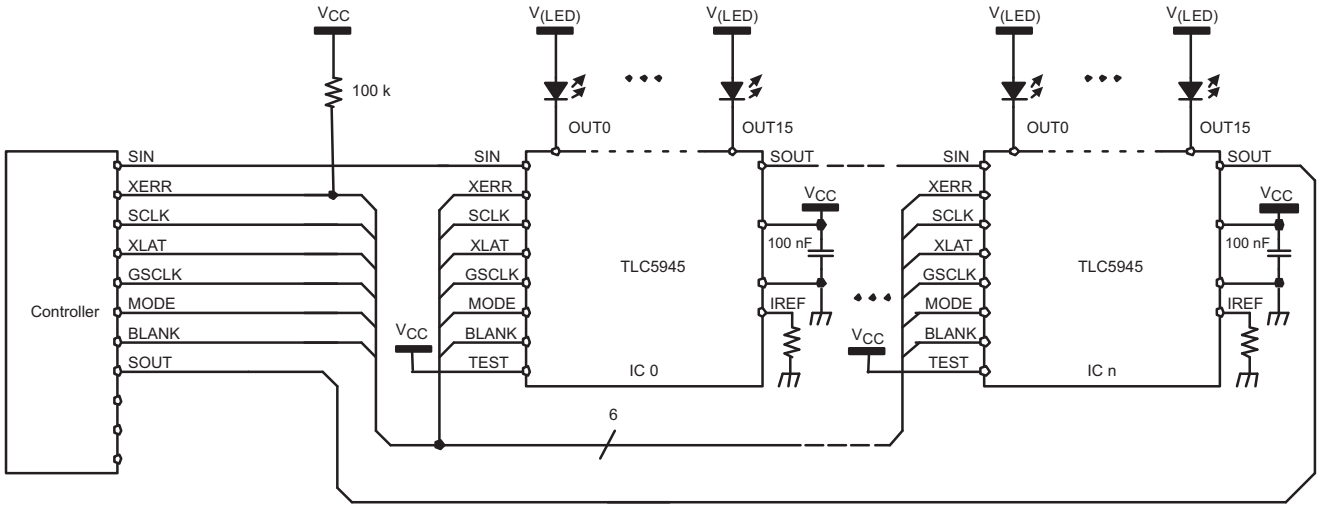

Figure 16. Cascading Devices

PACKAGING INFORMATION

Orderable part number	Status (1)	Material type (2)	Package | Pins	Package qty | Carrier	RoHS (3)	Lead finish/ Ball material (4)	MSL rating/ Peak reflow (5)	Op temp (°C)	Part marking (6)
TLC5945PWP	Obsolete	Production	HTSSOP (PWP) | 28	-	-	Call TI	Call TI	-40 to 85	TLC5945
TLC5945PWPR	Active	Production	HTSSOP (PWP) | 28	2000 | LARGE T&R	Yes	NIPDAU	Level-2-260C-1 YEAR	-40 to 85	TLC5945
TLC5945PWPR.A	Active	Production	HTSSOP (PWP) | 28	2000 | LARGE T&R	Yes	NIPDAU	Level-2-260C-1 YEAR	-40 to 85	TLC5945
TLC5945RHBR	Active	Production	VQFN (RHB) | 32	3000 | LARGE T&R	Yes	NIPDAU	Level-2-260C-1 YEAR	-40 to 85	TLC 5945
TLC5945RHBR.A	Active	Production	VQFN (RHB) | 32	3000 | LARGE T&R	Yes	NIPDAU	Level-2-260C-1 YEAR	-40 to 85	TLC 5945
TLC5945RHBR.B	Active	Production	VQFN (RHB) | 32	3000 | LARGE T&R	Yes	NIPDAU	Level-2-260C-1 YEAR	-40 to 85	TLC 5945

(1) **Status:** For more details on status, see our product life cycle.

(2) **Material type:** When designated, preproduction parts are prototypes/experimental devices, and are not yet approved or released for full production. Testing and final process, including without limitation quality assurance, reliability performance testing, and/or process qualification, may not yet be complete, and this item is subject to further changes or possible discontinuation. If available for ordering, purchases will be subject to an additional waiver at checkout, and are intended for early internal evaluation purposes only. These items are sold without warranties of any kind.

(3) **RoHS values:** Yes, No, RoHS Exempt. See the TI RoHS Statement for additional information and value definition.

(4) **Lead finish/Ball material:** Parts may have multiple material finish options. Finish options are separated by a vertical ruled line. Lead finish/Ball material values may wrap to two lines if the finish value exceeds the maximum column width.

(5) **MSL rating/Peak reflow:** The moisture sensitivity level ratings and peak solder (reflow) temperatures. In the event that a part has multiple moisture sensitivity ratings, only the lowest level per JEDEC standards is shown. Refer to the shipping label for the actual reflow temperature that will be used to mount the part to the printed circuit board.

(6) **Part marking:** There may be an additional marking, which relates to the logo, the lot trace code information, or the environmental category of the part.

Multiple part markings will be inside parentheses. Only one part marking contained in parentheses and separated by a "~" will appear on a part. If a line is indented then it is a continuation of the previous line and the two combined represent the entire part marking for that device.

Important Information and Disclaimer: The information provided on this page represents TI's knowledge and belief as of the date that it is provided. TI bases its knowledge and belief on information provided by third parties, and makes no representation or warranty as to the accuracy of such information. Efforts are underway to better integrate information from third parties. TI has taken and continues to take reasonable steps to provide representative and accurate information but may not have conducted destructive testing or chemical analysis on incoming materials and chemicals. TI and TI suppliers consider certain information to be proprietary, and thus CAS numbers and other limited information may not be available for release.

In no event shall TI's liability arising out of such information exceed the total purchase price of the TI part(s) at issue in this document sold by TI to Customer on an annual basis.

TAPE AND REEL INFORMATION

REEL DIMENSIONS

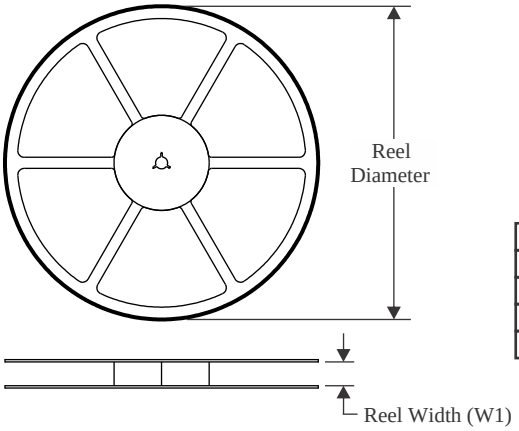

TAPE DIMENSIONS

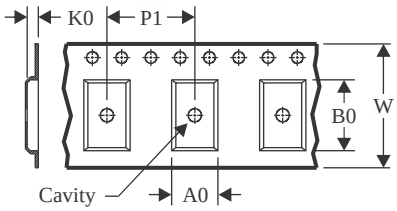

A0	Dimension designed to accommodate the component width
B0	Dimension designed to accommodate the component length
K0	Dimension designed to accommodate the component thickness
W	Overall width of the carrier tape
P1	Pitch between successive cavity centers

QUADRANT ASSIGNMENTS FOR PIN 1 ORIENTATION IN TAPE

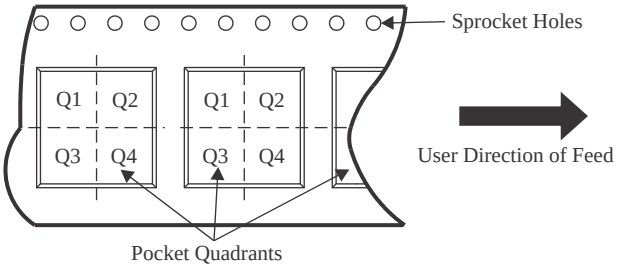

*All dimensions are nominal

Device	Package Type	Package Drawing	Pins	SPQ	Reel Diameter (mm)	Reel Width W1 (mm)	A0 (mm)	B0 (mm)	K0 (mm)	P1 (mm)	W (mm)	Pin1 Quadrant
TLC5945PWPR	HTSSOP	PWP	28	2000	330.0	16.4	6.75	10.1	1.8	12.0	16.0	Q1
TLC5945RHBR	VQFN	RHB	32	3000	330.0	12.4	5.3	5.3	1.5	8.0	12.0	Q2

TAPE AND REEL BOX DIMENSIONS

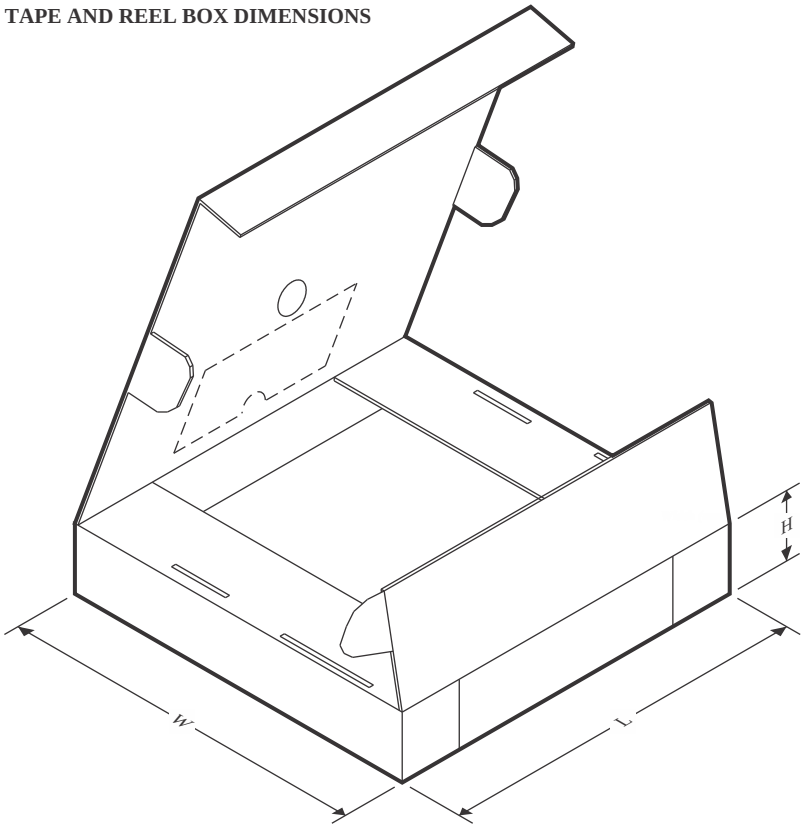

*All dimensions are nominal

Device	Package Type	Package Drawing	Pins	SPQ	Length (mm)	Width (mm)	Height (mm)
TLC5945PWPR	HTSSOP	PWP	28	2000	353.0	353.0	32.0
TLC5945RHBR	VQFN	RHB	32	3000	353.0	353.0	32.0

GENERIC PACKAGE VIEW

RHB 32

VQFN - 1 mm max height

5 x 5, 0.5 mm pitch

PLASTIC QUAD FLATPACK - NO LEAD

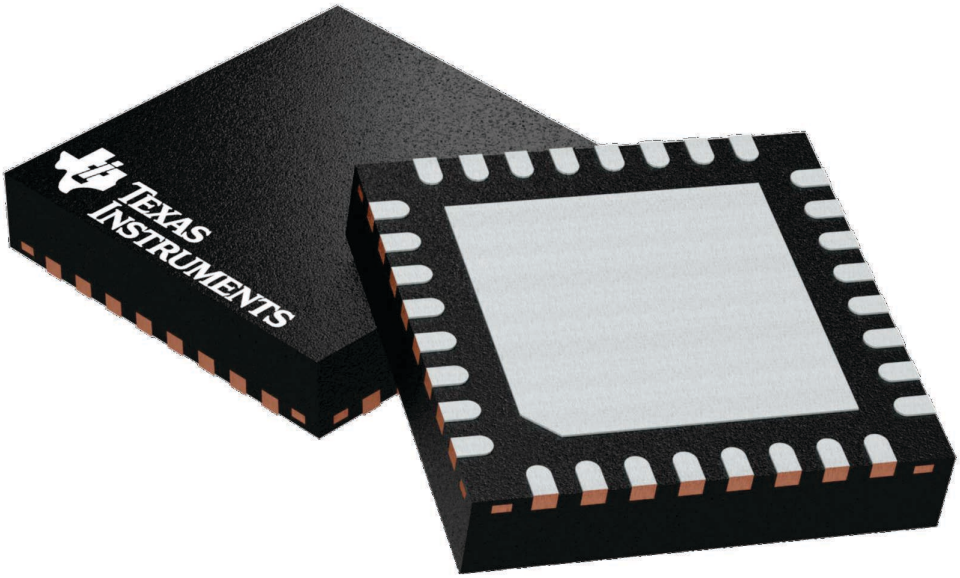

Images above are just a representation of the package family, actual package may vary.
Refer to the product data sheet for package details.

4224745/A

RHB0032E

PACKAGE OUTLINE

VQFN - 1 mm max height

PLASTIC QUAD FLATPACK - NO LEAD

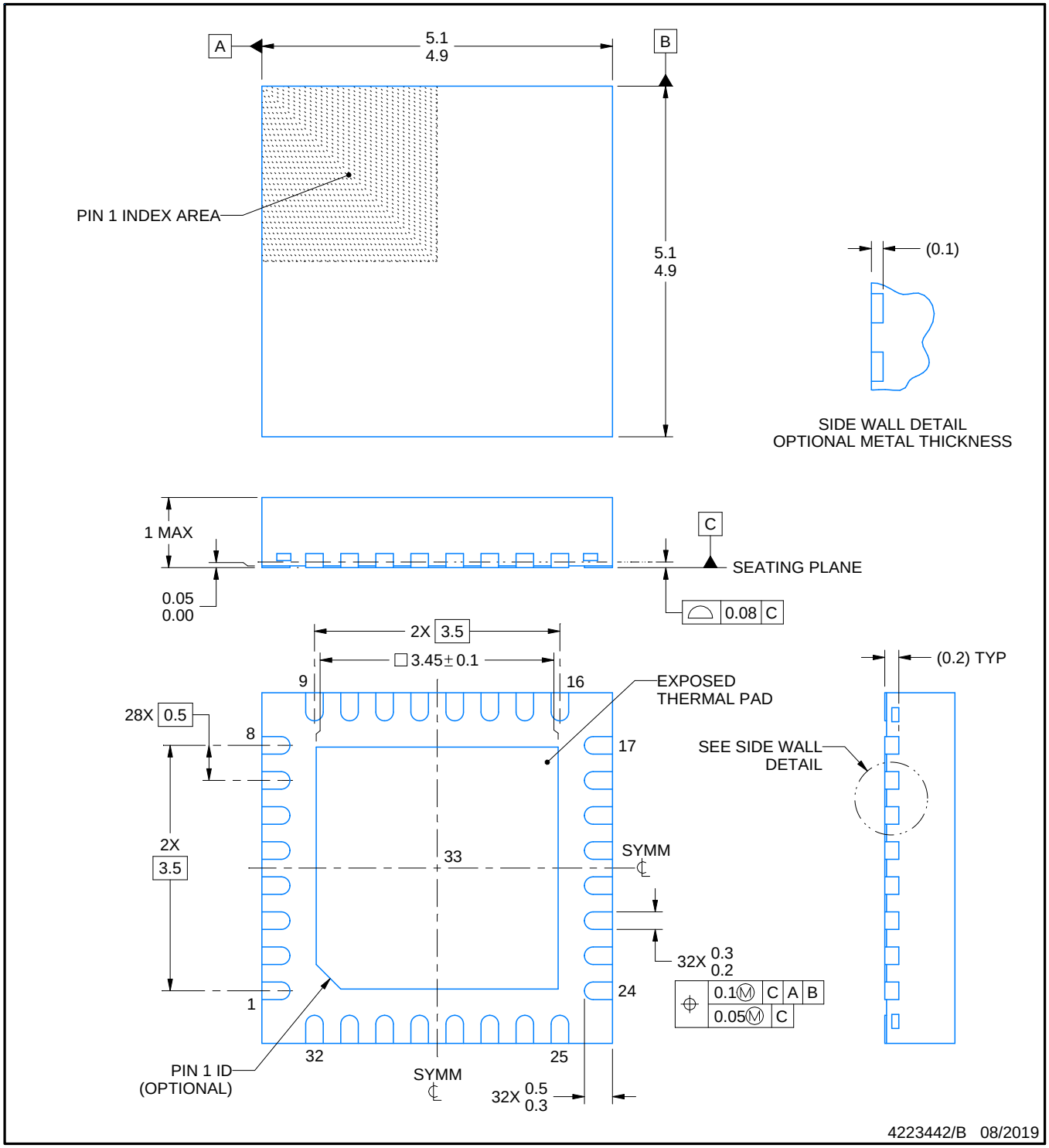

NOTES:

1. All linear dimensions are in millimeters. Any dimensions in parenthesis are for reference only. Dimensioning and tolerancing per ASME Y14.5M.
2. This drawing is subject to change without notice.
3. The package thermal pad must be soldered to the printed circuit board for thermal and mechanical performance.

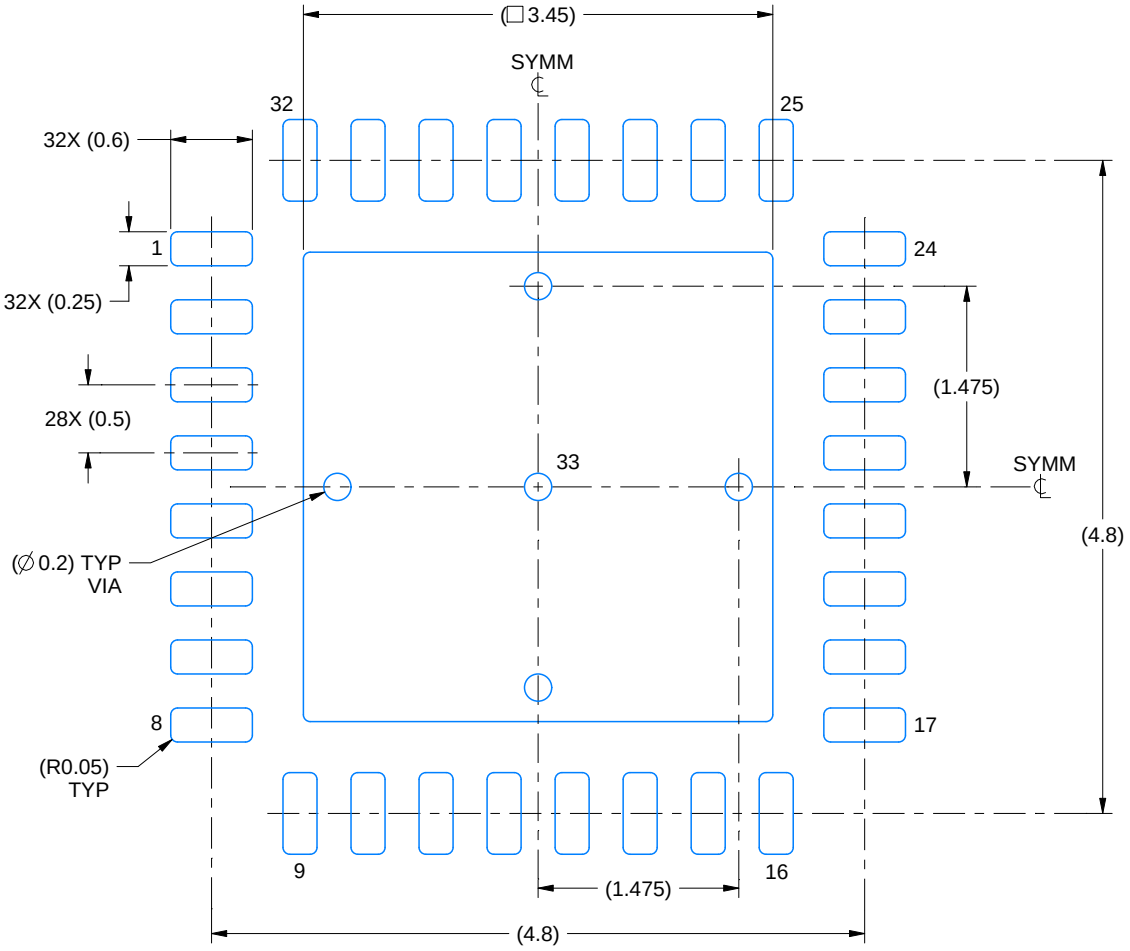

LAND PATTERN EXAMPLE
SCALE:18X

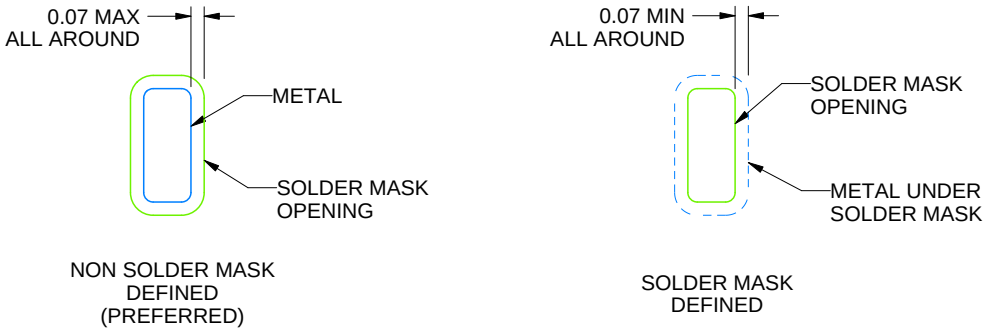

SOLDER MASK DETAILS

4223442/B 08/2019

NOTES: (continued)

4. This package is designed to be soldered to a thermal pad on the board. For more information, see Texas Instruments literature number SLUA271 (www.ti.com/lit/slua271).
5. Vias are optional depending on application, refer to device data sheet. If any vias are implemented, refer to their locations shown on this view. It is recommended that vias under paste be filled, plugged or tented.

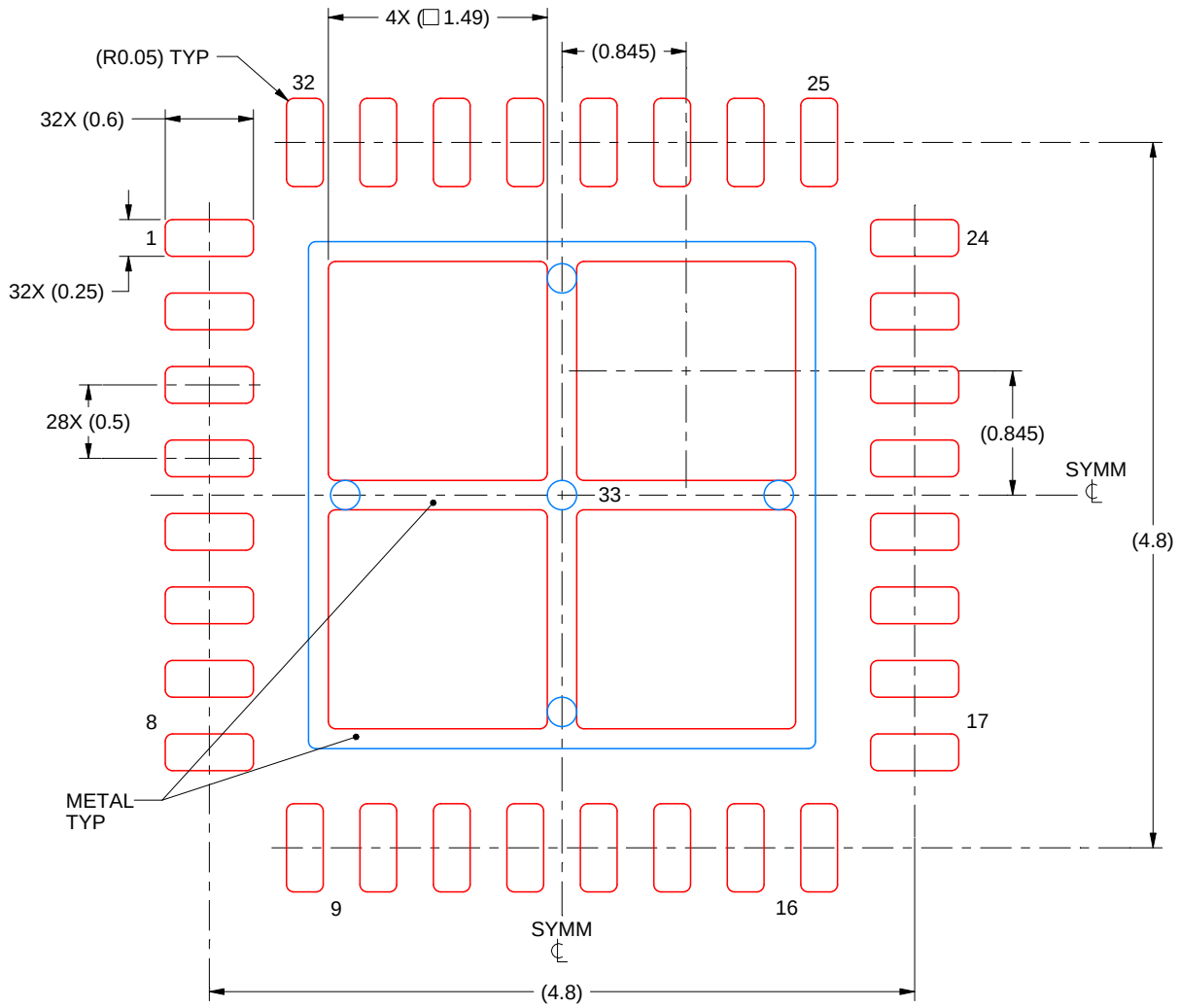

SOLDER PASTE EXAMPLE
BASED ON 0.125 mm THICK STENCIL

EXPOSED PAD 33:
75% PRINTED SOLDER COVERAGE BY AREA UNDER PACKAGE
SCALE:20X

4223442/B 08/2019

NOTES: (continued)

6. Laser cutting apertures with trapezoidal walls and rounded corners may offer better paste release. IPC-7525 may have alternate design recommendations.

GENERIC PACKAGE VIEW

PWP 28

PowerPAD™ TSSOP - 1.2 mm max height

4.4 x 9.7, 0.65 mm pitch

SMALL OUTLINE PACKAGE

This image is a representation of the package family, actual package may vary.
Refer to the product data sheet for package details.

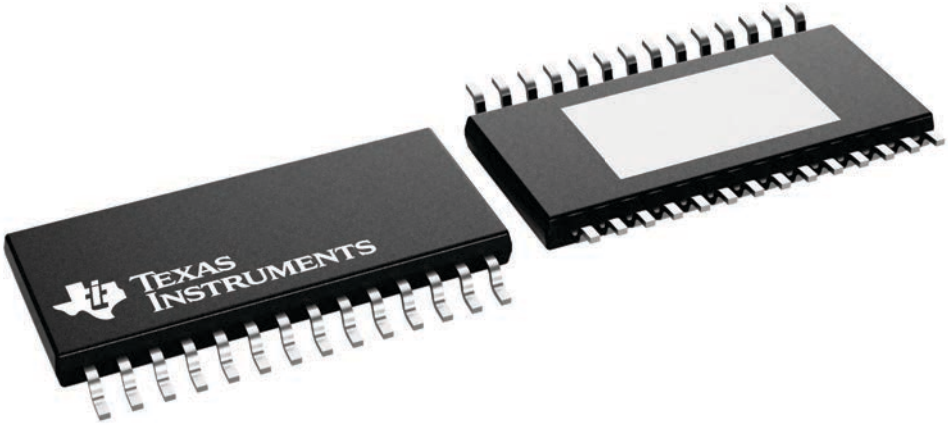

4224765/B

IMPORTANT NOTICE AND DISCLAIMER

TI PROVIDES TECHNICAL AND RELIABILITY DATA (INCLUDING DATASHEETS), DESIGN RESOURCES (INCLUDING REFERENCE DESIGNS), APPLICATION OR OTHER DESIGN ADVICE, WEB TOOLS, SAFETY INFORMATION, AND OTHER RESOURCES “AS IS” AND WITH ALL FAULTS, AND DISCLAIMS ALL WARRANTIES, EXPRESS AND IMPLIED, INCLUDING WITHOUT LIMITATION ANY IMPLIED WARRANTIES OF MERCHANTABILITY, FITNESS FOR A PARTICULAR PURPOSE OR NON-INFRINGEMENT OF THIRD PARTY INTELLECTUAL PROPERTY RIGHTS.

These resources are intended for skilled developers designing with TI products. You are solely responsible for (1) selecting the appropriate TI products for your application, (2) designing, validating and testing your application, and (3) ensuring your application meets applicable standards, and any other safety, security, regulatory or other requirements.

These resources are subject to change without notice. TI grants you permission to use these resources only for development of an application that uses the TI products described in the resource. Other reproduction and display of these resources is prohibited. No license is granted to any other TI intellectual property right or to any third party intellectual property right. TI disclaims responsibility for, and you fully indemnify TI and its representatives against any claims, damages, costs, losses, and liabilities arising out of your use of these resources.

TI’s products are provided subject to TI’s Terms of Sale, TI’s General Quality Guidelines, or other applicable terms available either on ti.com or provided in conjunction with such TI products. TI’s provision of these resources does not expand or otherwise alter TI’s applicable warranties or warranty disclaimers for TI products. Unless TI explicitly designates a product as custom or customer-specified, TI products are standard, catalog, general purpose devices.

TI objects to and rejects any additional or different terms you may propose.

Copyright © 2026, Texas Instruments Incorporated

Last updated 10/2025