# TMP63 ±1% 100-kΩ Linear Thermistor With 0402 and 0603 Package Options

## 1 Features

- Silicon-based thermistor with a positive temperature coefficient (PTC)
- Linear resistance change across temperature
- 100-kΩ nominal resistance at 25 °C (R25)
  - ±1% maximum (0 °C to 70 °C)
- Wide operating temperature of –40 °C to +150 °C
- Consistent sensitivity across temperature
  - 6400 ppm/°C TCR (25 °C)
  - 0.2% typical TCR tolerance across temperature range
- Fast thermal response time of 0.6 s (DEC)
- Long lifetime and robust performance
  - Built-in fail-safe in case of short-circuit failures
  - 0.3% typical long term sensor drift

## 2 Applications

- Temperature monitoring
  - HVAC and thermostats
  - Industrial control and appliances
- Thermal compensation
  - Display backlights
  - Building automation
- Thermal threshold detection
  - Motor control
  - Chargers

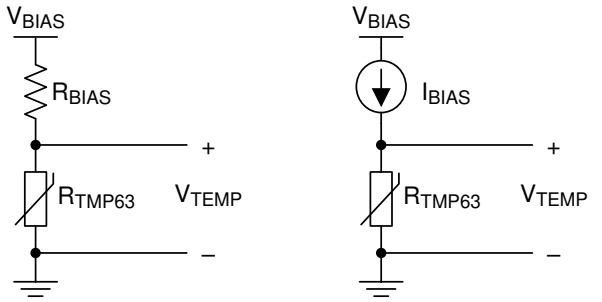


$$V_{TEMP} = \frac{V_{BIAS} \times R_{TMP63}}{R_{BIAS} + R_{TMP63}} \qquad V_{TEMP} = I_{BIAS} \times R_{TMP63}$$

**Typical Implementation**

## 3 Description

Get started today with the Thermistor Design Tool, offering complete resistance vs temperature table (R-T table) computation, other helpful methods to derive temperature and example C-code.

Linear thermistors offer linearity and consistent sensitivity across temperature to enable simple and accurate methods for temperature conversion. Low power consumption and a small thermal mass minimize the impact of self-heating. With built-in failsafe behavior at high temperatures and powerful immunity to environmental variation, these devices are designed for a long lifetime of high performance. The small size of the TMP6 series also allows for close placement to heat sources and quick response times.

Take advantage of benefits over NTC thermistors such as no extra linearization circuitry, minimized calibration, less resistance tolerance variation, larger sensitivity at high temperatures, and simplified conversion methods to save time and memory in the processor.

The TMP63 is currently available in a 0402 footprint-compatible X1SON package and a 0603 footprint-compatible SOT-5X3 package.

**Device Information (1)**

| PART NUMBER | PACKAGE | BODY SIZE (NOM) |
|---|---|---|
| TMP63 | X1SON (2) | 0.60 mm × 1.00 mm |
| | SOT-5X3 (2) | 0.80 mm × 1.20 mm |

(1) For all available packages, see the orderable addendum at the end of the data sheet.

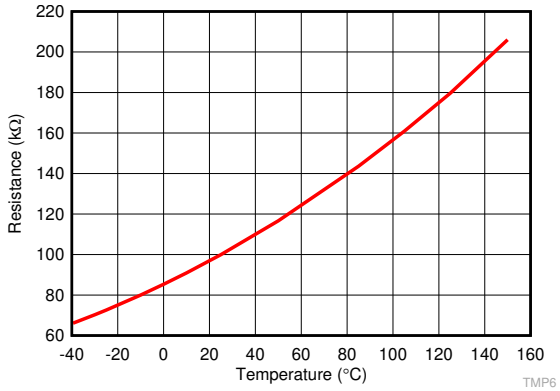


**Typical Resistances vs Ambient Temperature**

An IMPORTANT NOTICE at the end of this data sheet addresses availability, warranty, changes, use in safety-critical applications, intellectual property matters and other important disclaimers. PRODUCTION DATA.

## Table of Contents

**1 Features**....1
**2 Applications**....1
**3 Description**....1
**4 Revision History**....2
**5 Device Comparison**....4
**6 Pin Configuration and Functions**....5
Pin Functions....5
**7 Specifications**....6
7.1 Absolute Maximum Ratings....6
7.2 ESD Ratings....6
7.3 Recommended Operating Conditions....6
7.4 Thermal Information....6
7.5 Electrical Characteristics....7
7.6 Typical Characteristics....8
**8 Detailed Description**....10
8.1 Overview....10
8.2 Functional Block Diagram....10
8.3 Feature Description....10
8.4 Device Functional Modes....11
**9 Application and Implementation**....12
9.1 Application Information....12
9.2 Typical Application....12
**10 Power Supply Recommendations**....17
**11 Layout**....17
11.1 Layout Guidelines....17
11.2 Layout Example....17
**12 Device and Documentation Support**....18
12.1 Receiving Notification of Documentation Updates....18
12.2 Support Resources....18
12.3 Trademarks....18
12.4 Electrostatic Discharge Caution....18
12.5 Glossary....18
**13 Mechanical, Packaging, and Orderable Information**....18

## 4 Revision History

NOTE: Page numbers for previous revisions may differ from page numbers in the current version.

| Changes from Revision C (June 2020) to Revision D (November 2020) | Page |
|---|---|
| • Updated the numbering format for tables, figures, and cross-references throughout the document | 1 |
| • Removed preview note for DYA package | 1 |
| • Updated Device Comparison table with 150 °C rating for DYA packages | 4 |
| • Increased maximum junction temperature from 150 to 155 in *Absolute Maximum Ratings* Table | 6 |
| • Increased maximum storage temperature from 150 to 155 in *Absolute Maximum Ratings* Table | 6 |
| • Added DYA $T_A$ support to *Recommended Operating Conditions* Table | 6 |
| • Added 1000 hour Long Term Drift specification for DYA package | 7 |
| • Changed the *Typical Characteristics* section | 8 |
| • Added *Built-In Fail Safe* section | 11 |

| Changes from Revision B (February 2020) to Revision C (May 2020) | Page |
|---|---|
| • Updated Device Comparison table | 4 |
| • Corrected view description in Pin Configuration and Functions | 5 |
| • Changed Maximum ISNS from 400 µA to 40 µA in *Recommended Operating Conditions* Table | 6 |

| Changes from Revision * (December 2019) to Revision B (February 2020) | Page |
|---|---|
| • Updated Title | 1 |
| • Updated features list | 1 |
| • Updated Description | 1 |
| • Added DYA package as preview information | 1 |
| • Added DYA package to *Thermal Information* Table | 6 |
| • Changed minimum spec for 'Long Term Drift' for RH = 85 % from 0.1 % to -1 % | 7 |
| • Added typical spec for 'Long Term Drift' for RH = 85 % | 7 |
| • Changed maximum spec for 'Long Term Drift' for RH = 85 % from 0.8 % to 1 % | 7 |
| • Changed minimum spec for 'Long Term Drift' from 0.1 % to -1.5 % | 7 |
| • Added typical spec for 'Long Term Drift' | 7 |
| • Changed maximum spec for 'Long Term Drift' from 1 % to 1.8 % | 7 |


Copyright © 2020 Texas Instruments Incorporated

• Updated Thermistor Design Tool link..... 11

**Changes from Revision * (October 2019) to Revision A (December 2019)** **Page**

• Changed device status from Advanced Information to Production Data..... 1

# 5 Device Comparison

**Table 5-1. Device Comparison Table**

| PART NUMBER | R25 TYP | R25 %TOL | RATING | $T_A$ | PACKAGE OPTIONS |
|---|---|---|---|---|---|
| TMP61 | 10k | 1% | Catalog | –40 °C to 125 °C | X1SON / DEC (0402) |
| | | | | –40 °C to 150 °C | SOT-5X3 / DYA (0603) |
| | | | | –40 °C to 150 °C | TO-92S / LPG |
| TMP61-Q1 | 10k | 1% | Automotive Grade-1 | –40 °C to 125 °C | X1SON / DEC (0402) |
| | | | Automotive Grade-0 | –40 °C to 150 °C | SOT-5X3 / DYA (0603) |
| | | | | –40 °C to 170 °C | TO-92S / LPG |
| TMP63 | 100k | 1% | Catalog | –40 °C to 125 °C | X1SON / DEC (0402) |
| | | | | –40 °C to 150 °C | SOT-5X3 / DYA (0603) |
| TMP63-Q1 | 100k | 1% | Automotive Grade-1 | –40 °C to 125 °C | X1SON / DEC (0402) |
| | | | Automotive Grade-0 | –40 °C to 150 °C | SOT-5X3 / DYA (0603) |
| TMP64 | 47k | 1% | Catalog | –40 °C to 125 °C | X1SON / DEC (0402) |
| | | | | –40 °C to 150 °C | SOT-5X3 / DYA (0603) |
| TMP64-Q1 | 47k | 1% | Automotive Grade-1 | –40 °C to 125 °C | X1SON / DEC (0402) |
| | | | Automotive Grade-0 | –40 °C to 150 °C | SOT-5X3 / DYA (0603) |


Copyright © 2020 Texas Instruments Incorporated

## 6 Pin Configuration and Functions

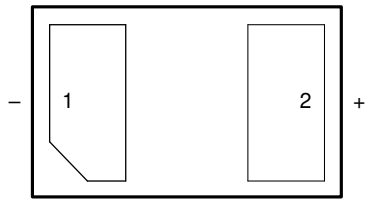


**Figure 6-1. DEC Package 2-Pin X1SON Bottom View**

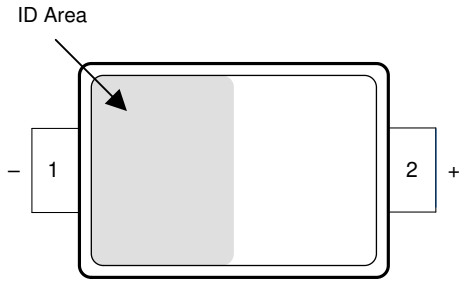


**Figure 6-2. DYA Package 2-Pin SOT-5X3 Top View**

### Pin Functions

| PIN | | TYPE | DESCRIPTION |
|---|---|---|---|
| NAME | NO. | | |
| – | 1 | — | Thermistor (–) and (+) terminals. For proper operation, ensure a positive bias where the + terminal is at a higher voltage potential than the – terminal. |
| + | 2 | | |

# 7 Specifications

## 7.1 Absolute Maximum Ratings

over operating free-air temperature range (unless otherwise noted) [1]

| | MIN | MAX | UNIT |
|---|---|---|---|
| Voltage across pins 2 (+) and 1(–) | | 6 | V |
| Current through the device | | 450 | µA |
| Junction temperature ($T_J$) | –65 | 155 | °C |
| Storage temperature ($T_{stg}$) | –65 | 155 | °C |

(1) Stresses beyond those listed under *Absolute Maximum Ratings* may cause permanent damage to the device. These are stress ratings only, which do not imply functional operation of the device at these or anyother conditions beyond those indicated under *Recommended OperatingConditions*. Exposure to absolute-maximum-rated conditions for extended periods mayaffect device reliability.

## 7.2 ESD Ratings

| | | | VALUE | UNIT |
|---|---|---|---|---|
| $V_{(ESD)}$ | Electrostatic discharge | Human-body model (HBM) per JESD22-A114[1] | ±2000 | V |
| | | Charged-device model (CDM), per JEDEC specification JESD22-C101[2] | ±1000 | |

(1) JEDEC document JEP155 states that 500-V HBM allows safe manufacturing with a standard ESD control process.
(2) JEDEC document JEP157 states that 250-V CDM allow safe manufacturing with a standard ESD control process.

## 7.3 Recommended Operating Conditions

over operating free-air temperature range (unless otherwise noted)

| | | MIN | NOM | MAX | UNIT |
|---|---|---|---|---|---|
| $V_{Sns}$ | Voltage across pins 2 (+) and 1 (–) | 0 | | 5.5 | V |
| $I_{Sns}$ | Current through the device | 0 | | 40 | µA |
| $T_A$ | Operating free-air temperature (X1SON/DEC Package) | –40 | | 125 | °C |
| | Operating free-air temperature (SOT-5X3/DYA Package) | –40 | | 150 | °C |

## 7.4 Thermal Information

| THERMAL METRIC[1] [2] | | TMP63 | | UNIT |
|---|---|---|---|---|
| | | DEC (X1SON) | DYA (SOT-5X3) | |
| | | 2 PINS | 2 PINS | |
| $R_{\theta JA}$ | Junction-to-ambient thermal resistance[3] [4] | 443.4 | 742.9 | °C/W |
| $R_{\theta JC(top)}$ | Junction-to-case (top) thermal resistance | 195.7 | 315.8 | °C/W |
| $R_{\theta JB}$ | Junction-to-board thermal resistance | 254.6 | 506.2 | °C/W |
| $\Psi_{JT}$ | Junction-to-top characterization parameter | 19.9 | 109.3 | °C/W |
| $\Psi_{JB}$ | Junction-to-board characterization parameter | 254.5 | 500.4 | °C/W |
| $R_{\theta JC(bot)}$ | Junction-to-case (bottom) thermal resistance | – | – | °C/W |

(1) For more information about traditional and new thermal metrics, see the Semiconductor and IC Package Thermal Metrics application report.
(2) For information on self-heating and thermal response time see Layout Guidelines section.
(3) The junction to ambient thermal resistance ($R\theta_{JA}$ ) under natural convection is obtained in a simulation on a JEDEC-standard, High-K board as specified in JESD51-7, in an environment described in JESD51-2. Exposed pad packages assume that thermal vias are included in the PCB, per JESD 51-5.
(4) Changes in output due to self heating can be computed by multiplying the internal dissipation by the thermal resistance.


Copyright © 2020 Texas Instruments Incorporated

## 7.5 Electrical Characteristics

$T_A$ = -40 °C - 125 °C, $I_{Sns}$ = 20 µA (unless otherwise noted)

| PARAMETER | | TEST CONDITIONS | MIN | TYP | MAX | UNIT |
|---|---|---|---|---|---|---|
| $R_{25}$ | Thermistor Resistance at 25 °C | $T_A$ = 25 °C | | 100 | | kΩ |
| $R_{TOL}$ | Resistance Tolerance | $T_A$ = 25 °C | –1 | | 1 | % |
| | | $T_A$ = 0 °C - 70 °C | –1 | | 1 | |
| | | $T_A$ = -40 °C - 125 °C | –1.5 | | 1.5 | |
| $TCR_{-35}$ | Temperature Coefficient of Resistance | T1 = -40 °C, T2 = -30 °C | | +6220 | | ppm/°C |
| $TCR_{25}$ | | T1 = 20 °C, T2 = 30 °C | | +6400 | | |
| $TCR_{85}$ | | T1 = 80 °C, T2 = 90 °C | | +5910 | | |
| $TCR_{-35}$ % | Temperature Coefficient of Resistance Tolerance | T1 = -40 °C, T2 = -30 °C | | ±0.4 | | % |
| $TCR_{25}$ % | | T1 = 20 °C, T2 = 30 °C | | ±0.2 | | |
| $TCR_{85}$ % | | T1 = 80 °C, T2 = 90 °C | | ±0.3 | | |
| ΔR | Sensor Long Term Drift (Reliability) | 96 hours continuous operation at RH = 85 %, and $T_A$ = 130 °C<br>$V_{Bias}$ = 5.5 V | -1 | ±0.1 | 1 | % |
| | | 600 hours continuous operation at $T_A$ = 150 °C<br>$V_{Bias}$ = 5.5 V DEC Package | -1.5 | ±0.3 | 1.8 | |
| | | 600 hours continuous operation at $T_A$ = 150 °C<br>$V_{Bias}$ = 5.5V, DYA Package | -1.2 | ±0.2 | 1.2 | |
| | | 1000 hours continuous operation at $T_A$ = 150 °C<br>$V_{Bias}$ = 5.5V, DYA Package | -1.2 | ±0.3 | 1.2 | |
| $t_{RES}$ (stirred liquid) | Thermal response to 63% | T1 = 25 °C in Still Air to T2 = 125 °C in Stirred Liquid | | 0.6 | | s |
| $t_{RES}$ (still air) | Thermal response to 63% | T1 = 25 °C to T2 = 70 °C in Still Air | | 3.2 | | s |

## 7.6 Typical Characteristics

at $T_A$ = 25 °C, (unless otherwise noted)

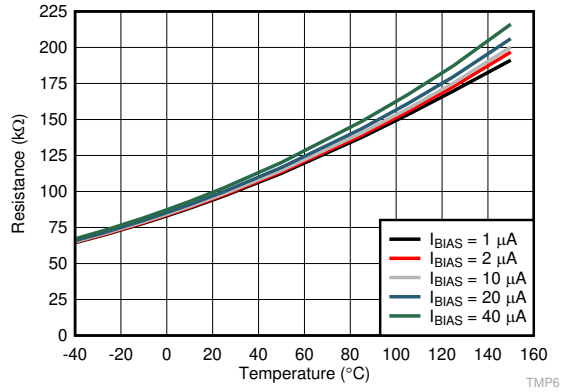


**Figure 7-1. Resistance vs. Ambient Temperature Using Multiple Bias Currents**

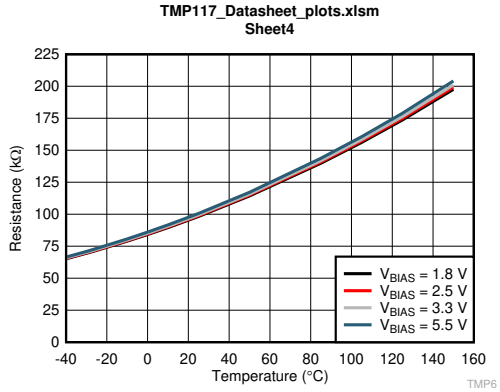


$R_{BIAS}$ = 100 kΩ with ±0.01 % tolerance

**Figure 7-2. Resistance vs. Ambient Temperature Using Multiple Bias Voltages**

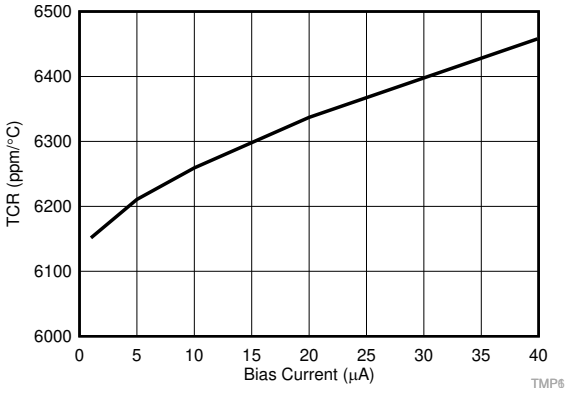


**Figure 7-3. TCR vs. Sense Currents ($I_{SNS}$)**

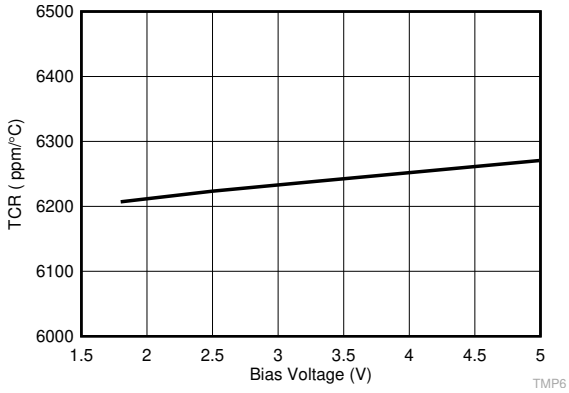


$R_{Bias}$ = 100 kΩ with ±0.01 % Tolerance

**Figure 7-4. TCR as a Function of Sense Voltages, V Sns**

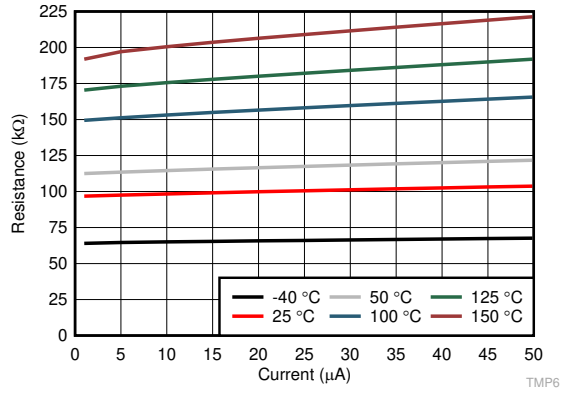


**Figure 7-5. Supply Dependence Resistance vs. Bias Current**

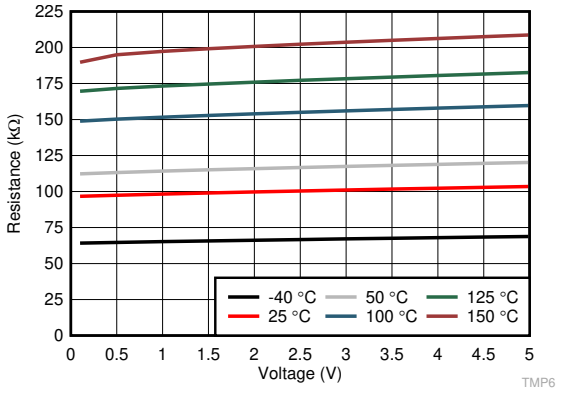


$R_{Bias}$ = 100 kΩ ( ±0.01 % tolerance)

**Figure 7-6. Supply Dependence vs. Bias Voltage**


Copyright © 2020 Texas Instruments Incorporated

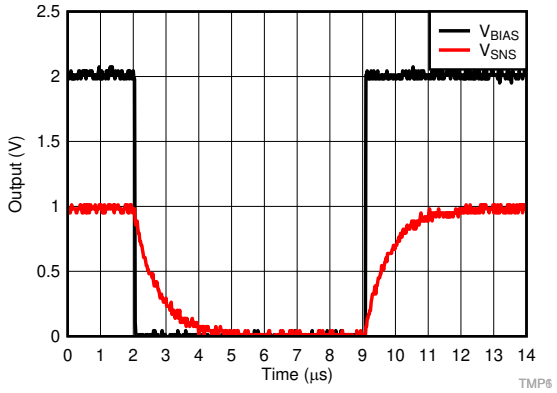


$V_{SNS}$ = 1 V.

**Figure 7-7. Step Response**

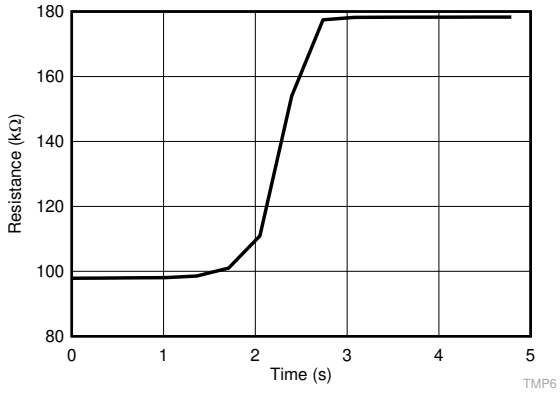


Ambient material: stirred liquid. Temperature: 25 °C to 125 °C

**Figure 7-8. DEC Thermal Response Time**

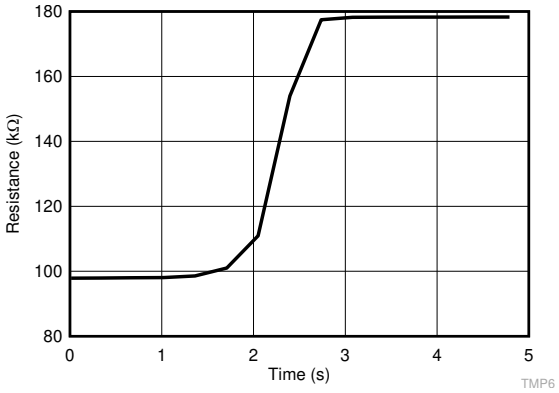


Ambient material: stirred liquid. Temperature: 25 °C to 125 °C

**Figure 7-9. DYA Thermal Response Time**

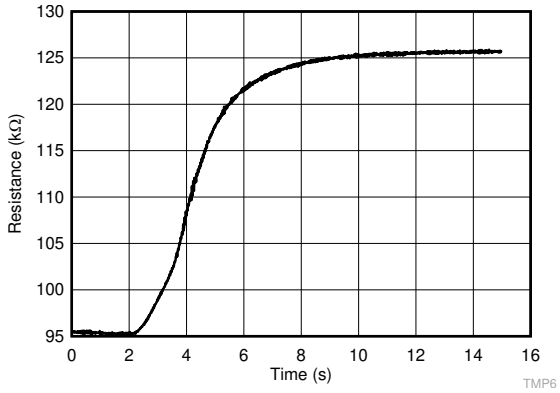


Ambient material: still air

**Figure 7-10. Thermal Response Time**

# 8 Detailed Description

## 8.1 Overview

The TMP63 silicon linear thermistor has a linear positive temperature coefficient (PTC) that results in a uniform and consistent temperature coefficient resistance (TCR) across a wide operating temperature range. TI uses a special silicon process where the the doping level and active region areas devices control the key characteristics (the temperature coefficient resistance (TCR) and nominal resistance (R25)) . The device has an active area and a substrate due to the polarized terminals. Connect the positive terminal to the highest voltage potential. Connect the negative terminal to the lowest voltage potential.

Unlike an NTC, which is a purely resistive device, the TMP63 resistance is affected by the current across the device and the resistance changes when the temperature changes. In a voltage divider circuit, it is recommended to maintain the top resistor value at 100 kΩ. Changing the top resistor value or the $V_{BIAS}$ value changes the resistance vs temperature table (R-T table) of the TMP63, and subsequently the polynomials as described in the Section 9.2.1.1. Consult Section 8.3.1 for more information.

Equation 1 can help the user approximate the TCR.

$$\text{TCR (ppm/°C)} = (R_{T2} - R_{T1}) / ((T2 - T1) \times R_{(T2+T1)/2}) \quad (1)$$

Key terms and definitions:

- $I_{SNS}$: Current flowing through the TMP63 device
- $V_{SNS}$: Voltage across the two TMP63 terminal
- $I_{BIAS}$: Current supplied by the biasing circuit.
- $V_{BIAS}$: Voltage supplied by the biasing circuit.
- $V_{TEMP}$: Output voltage that corresponds to the measured temperature. Note that this is different from $V_{SNS}$. In the use case of a voltage divider circuit with the TMP63 in the high side, $V_{TEMP}$ is measured across $R_{BIAS}$.

## 8.2 Functional Block Diagram

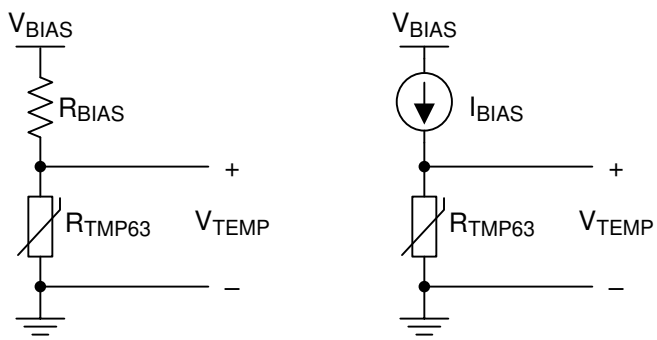


$$V_{TEMP} = \frac{V_{BIAS} \times R_{TMP63}}{R_{BIAS} + R_{TMP63}} \qquad V_{TEMP} = I_{BIAS} \times R_{TMP63}$$

**Figure 8-1. Typical Implementation Circuits**

## 8.3 Feature Description


Copyright © 2020 Texas Instruments Incorporated

### 8.3.1 TMP63 R-T table

The TMP63 R-T table must be re-calculated for any change in the bias voltage, bias resistor, or bias current. TI provides a Thermistor Design Tool to calculate the R-T table. The system designer must always validate the calculations provided.

### 8.3.2 Linear Resistance Curve

The TMP63 has good linear behavior across the whole temperature range as shown in Figure 7-3. This range allows a simpler resistance-to-temperature conversion method that reduces look-up table memory requirements. The linearization circuitry or midpoint calibration associated with traditional NTCs is not necessary with the device .

The linear resistance across the entire temperature range allows the device to maintain sensitivity at higher operating temperatures.

### 8.3.3 Positive Temperature Coefficient (PTC)

The TMP63 has a positive temperature coefficient. As temperature increases the device resistance increases leading to a reduction in power consumption of the bias circuit. In comparison, a negative coefficient system increases power consumption with temperature as the resistance decreases.

The TMP63 benefits from the reduced power consumption of the bias circuit with less self-heating than a typical NTC system.

### 8.3.4 Built-In Fail Safe

The TMP6 family feature a positive tempeature coefficient. During a short-to-supply condition, the thermistor will have increased current and power dissipated. Due to the positive temperature slope, the TMP6 will increase resistance and limit self-heating by design.

In contrast, a NTC would continually reduce resistance due to self-heating leading to a positive feedback of increasing power dissipation and decreasing resistance.

## 8.4 Device Functional Modes

The device operates in only one mode when operated within the *Recommended Operating Conditions*.

# 9 Application and Implementation

**Note**

Information in the following applications sections is not part of the TI component specification, and TI does not warrant its accuracy or completeness. TI's customers are responsible for determining suitability of components for their purposes. Customers should validate and test their design implementation to confirm system functionality.

## 9.1 Application Information

The TMP63 is a positive temperature coefficient (PTC) linear silicon thermistor. The device behaves as a temperature-dependent resistor, and may be configured in a variety of ways to monitor temperature based on the system-level requirements. The device has a nominal resistance at 25 °C (R25) of 100 kΩ , a maximum operating voltage of 5.5 V ($V_{SNS}$), and maximum supply current of 40 µA ($I_{SNS}$). This device may be used in a variety of applications to monitor temperature close to a heat source with the very small DEC package option compatible with the typical 0402 (inch) footprint. Some of the factors that influence the total measurement error include the ADC resolution (if applicable), the tolerance of the bias current or voltage, the tolerance of the bias resistance in the case of a voltage divider configuration, and the location of the sensor with respect to the heat source.

## 9.2 Typical Application

### 9.2.1 Thermistor Biasing Circuits

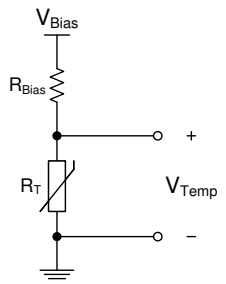


**Figure 9-1. Voltage Biasing Circuit With Linear Thermistor**

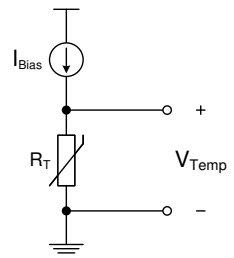


**Figure 9-2. Current Biasing Circuit With Linear Thermistor**

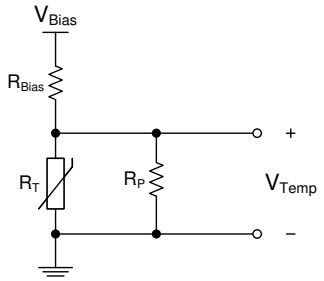


**Figure 9-3. Voltage Biasing Circuit With Non-Linear Thermistor**

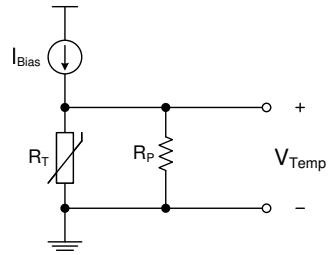


**Figure 9-4. Current Biasing Circuit With Non-Linear Thermistor**

#### *9.2.1.1 Design Requirements*

Existing thermistors, in general, have a non-linear temperature vs. resistance curve. To linearize the thermistor response, the engineer can use a voltage linearization circuit with a voltage divider configuration, or a resistance linearization circuit by adding another resistance in parallel with the thermistor, $R_P$. Section 9.2.1 highlights the two implementations where $R_T$ is the thermistor resistance. To generate an output voltage across the thermistor, the engineer can use a voltage divider circuit with the thermistor placed at either the high side (close to supply) or low side (close to ground), depending on the desired voltage response (negative or positive). Alternatively, the thermistor can be biased directly using a precision current source (yielding the highest accuracy and voltage


Copyright © 2020 Texas Instruments Incorporated

gain). It is common to use a voltage divider with thermistors because of its simple implementation and lower cost. The TMP63 has a linear positive temperature coefficient (PTC) of resistance such that the voltage measured across it increases linearly with temperature. As such, the need for a linearization circuits is no longer a requirement, and a simple current source or a voltage divider circuit can be used to generate the temperature voltage.

This output voltage can be interpreted using a comparator against a voltage reference to trigger a temperature trip point that is either tied directly to an ADC to monitor temperature across a wider range or used as feedback input for an active feedback control circuit.

The voltage across the device, as described in Equation 2, can be translated to temperature using either a lookup table method (LUT) or a fitting polynomial, V(T). The Thermistor Design Tool must be used to translate Vtemp to Temperature. The temperature voltage must first be digitized using an ADC. The necessary resolution of this ADC is dependent on the biasing method used. Additionally, for best accuracy, tie the bias voltage ($V_{BIAS}$) to the reference voltage of the ADC to create a measurement where the difference in tolerance between the bias voltage and the reference voltage cancels out. The application can also include a low-pass filter to reject system level noise. In this case, place the filter as close to the ADC input as possible.

#### *9.2.1.2 Detailed Design Procedure*

The resistive circuit divider method produces an output voltage ($V_{TEMP}$) scaled according to the bias voltage ($V_{BIAS}$). When $V_{BIAS}$ is also used as the reference voltage of the ADC, any fluctuations or tolerance error due to the voltage supply are canceled and do not affect the temperature accuracy (as shown in Figure 9-5). Equation 2 describes the output voltage ($V_{TEMP}$) based on the variable resistance of the TMP63 ($R_{TMP63}$) and bias resistor ($R_{BIAS}$). The ADC code that corresponds to that output voltage, ADC full-scale range, and ADC resolution is given in Equation 3.

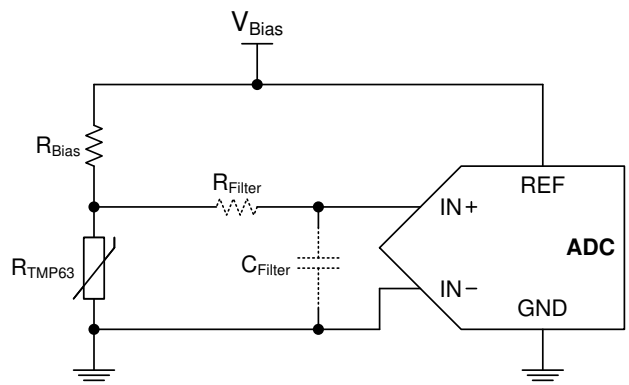


**Figure 9-5. Voltage Divider With an ADC**

$$V_{TEMP} = V_{BIAS} \times \left( \frac{R_{TMP63}}{R_{BIAS} + R_{TMP63}} \right) \tag{2}$$

$$\text{ADC Code} = \left( \frac{V_{TEMP}}{FSR} \right) \times 2^n \tag{3}$$

where

- FSR is the full-scale range of the ADC, which is the voltage at REF to GND ($V_{REF}$)
- n is the resolution of the ADC

Equation 4 shows whenever $V_{REF} = V_{BIAS}$, $V_{BIAS}$ cancels out.

$$\text{ADC Code} = \left( \frac{V_{BIAS} \times \left( \frac{R_{TMP63}}{R_{BIAS} + R_{TMP63}} \right)}{V_{BIAS}} \right) \times 2^n = \left( \frac{R_{TMP63}}{R_{BIAS} + R_{TMP63}} \right) \times 2^n \tag{4}$$

Use a polynomial equation or a LUT to extract the temperature reading based on the ADC code read in the microcontroller. Use the Thermistor Design Tool to translate the TMP63 resistance to temperature.

The cancellation of $V_{BIAS}$ is one benefit to using a voltage-divider (ratiometric approach), but the sensitivity of the output voltage of the divider circuit cannot increase much. Therefore, this application design does not use all of the ADC codes due to the small voltage output range compared to the FSR. This application is very common, however, and is simple to implement.

A current source-based circuit, such as the one shown in Figure 9-6, offers better control over the sensitivity of the output voltage and achieve higher accuracy. In this case, the output voltage is simply V = I × R. For example, if a current source of 40 µA is used with the device, the output voltage spans approximately 5.5 V and has a gain up to 40 mV/°C. Having control over the voltage range and sensitivity allows for full use of the ADC codes and full-scale range. Figure 9-11 shows the temperature voltage for various bias current conditions. Similar to the ratiometric approach, if the ADC has a built-in current source that shares the same bias as the reference voltage of the ADC, the tolerance of the supply current cancels out. In this case, a precision ADC is not required. This method yields the best accuracy, but can increase the system implementation cost.

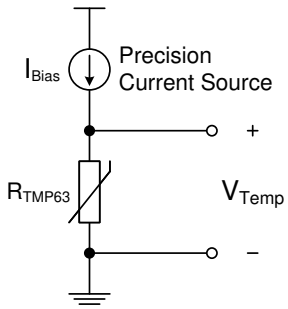


**Figure 9-6. Biasing Circuit With Current Source**

In comparison to the non-linear NTC thermistor in a voltage divider, the TMP63 has an enhanced linear output characteristic. The two voltage divider circuits with and without a linearization parallel resistor, $R_P$, are shown in Figure 9-7. Consider an example where $V_{BIAS}$ = 5 V, $R_{BIAS}$ = 100 kΩ, and a parallel resistor ($R_P$) is used with the NTC thermistor ($R_{NTC}$) to linearize the output voltage with an additional 100-kΩ resistor. The device produces a linear curve across the entire temperature range while the NTC curve is only linear across a small temperature region. When the parallel resistor ($R_P$) is added to the NTC circuit, the added resistor makes the curve much more linear but greatly affects the output voltage range.

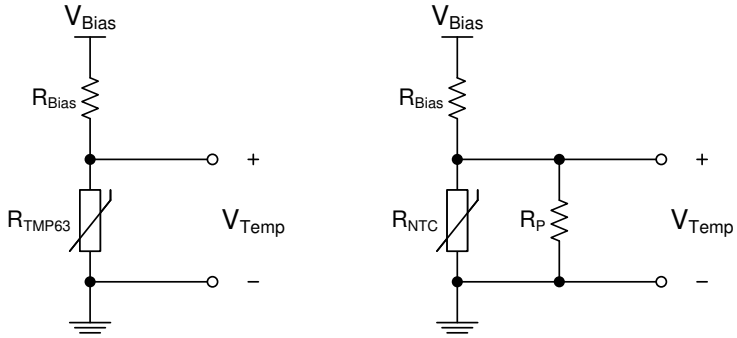


**Figure 9-7. TMP63 vs. NTC With Linearization Resistor ($R_P$) Voltage Divider Circuits**


Copyright © 2020 Texas Instruments Incorporated

#### 9.2.1.2.1 Thermal Protection With Comparator

Use the TMP63 device along with a voltage reference, and a comparator to program the thermal protection. As shown in Figure 9-8, the output of the comparator remains low until the voltage of the thermistor divider, with $R_{BIAS}$ and $R_{TMP63}$, rises above the threshold voltage set by $R_1$ and $R_2$. When the output goes high, the comparator signals an overtemperature warning signal. The engineer can also program the hysteresis to prevent the output from continuously toggling around the temperature threshold when the output returns low. Either a comparator with built-in hysteresis or feedback resistors may be used.

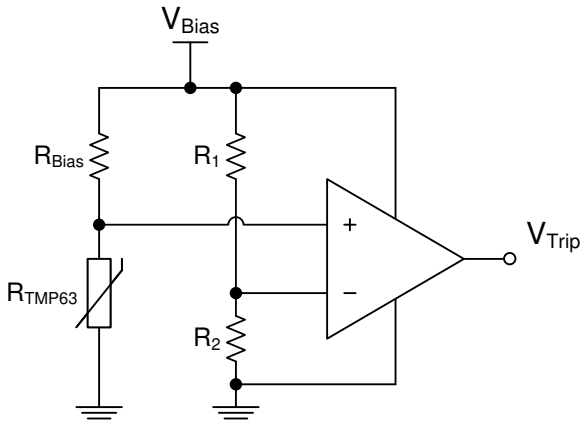


**Figure 9-8. Temperature Switch Using Voltage Divider and a Comparator**

#### 9.2.1.2.2 Thermal Foldback

One application that uses the output voltage of the TMP63 in an active control circuit is thermal foldback. This is performed to reduce, or fold back, the current driving a string of LEDs, for example. At high temperatures, the LEDs begin to heat up due to environmental conditions and self heating. Thus, at a certain temperature threshold based on the LED's safe operating area, the driving current must be reduced to cool down the LEDs and prevent thermal runaway. The device voltage output increases with temperature when the output is in the lower position of the voltage divider and can provide a response used to fold back the current. Typically, the device holds the current at a specified level until a high temperature is reached, known as the knee point, at which the current must be rapidly reduced in order to continue operation. To better control the temperature/voltage sensitivity, the device uses a rail-to-rail operational amplifier. Figure 9-9 shows the temperature knee point where the foldback begins. The set by the reference voltage (2.5 V) at the positive input, and the feedback resistors set the response of the foldback curve. The foldback knee point may be chosen based on the output of the voltage divider and the corresponding temperature from Equation 5 (110°C, for example). The device uses a buffer between the voltage divider with $R_{TMP63}$ and the input to the op amp to prevent loading and variations in $V_{TEMP}$.

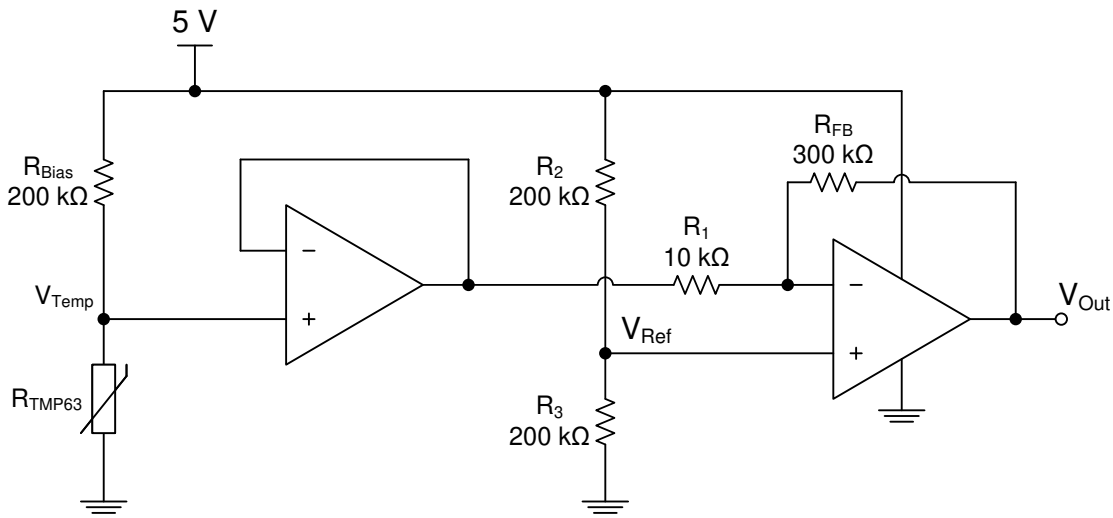


**Figure 9-9. Thermal Foldback Using Voltage Divider and a Rail-to-Rail Op Amp**

The op amp remains high as long as the voltage output is below $V_{REF}$. When the temperature goes above 110°C, the output falls to the 0-V rail of the op amp. The rate at which the foldback occurs depends on the feedback network, $R_{FB}$ and $R_1$, which varies the gain of the op amp, G, as shown in Equation 6. The foldback behavior controls the voltage and temperature sensitivity of the circuit. The device feeds this voltage output into a LED driver circuit that adjusts output current accordingly. $V_{OUT}$ is the final output voltage used for thermal foldback and is calculated in Equation 7. Figure 9-10 describes the output voltage curve in this example which sets the knee point at 110°C.

$$V_{TEMP} = V_{BIAS} \times \left( \frac{R_{TMP63}}{R_{BIAS} + R_{TMP63}} \right) \tag{5}$$

$$G = \frac{R_{FB}}{R_1} \tag{6}$$

$$V_{OUT} = -G \times V_{TEMP} + (1 + G) \times V_{REF} \tag{7}$$

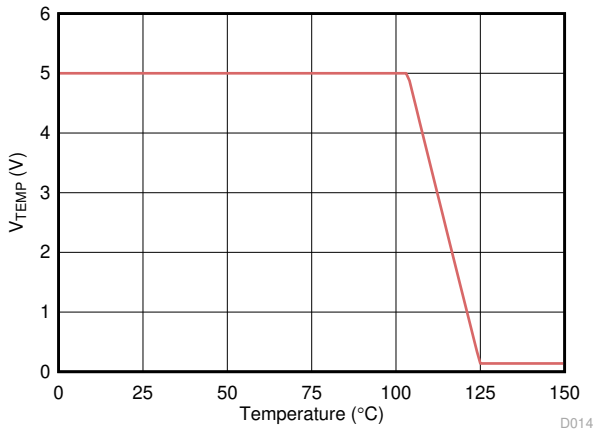


**Figure 9-10. Thermal Foldback Voltage Output Curve**


Copyright © 2020 Texas Instruments Incorporated

#### 9.2.1.3 Application Curve

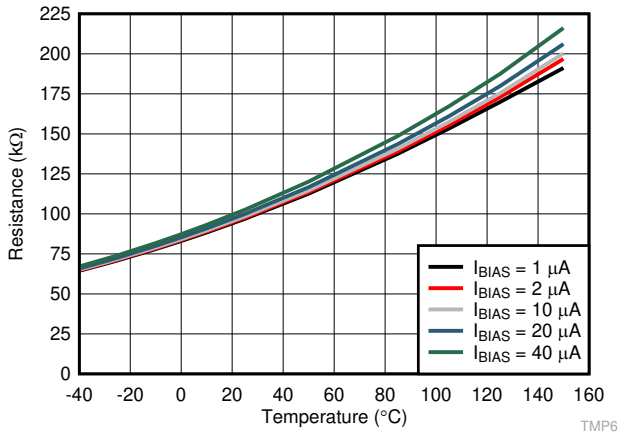


**Figure 9-11. Temperature vs. Voltage at Varying Current Source Values**

## 10 Power Supply Recommendations

The maximum recommended operating voltage of the TMP63 is 5.5 V ($V_{SNS}$), and the maximum current through the device is 40 µA ($I_{SNS}$).

## 11 Layout

### 11.1 Layout Guidelines

The layout of the TMP63 is similar to that of a passive component. If the device is biased with a current source, the positive pin 2 is connected to the source, while the negative pin 1 is connected to ground. If the circuit is biased with a voltage source, and the device is placed on the lower side of the resistor divider, V– is connected to ground, and V+ is connected to the output ($V_{TEMP}$). If the device is placed on the upper side of the divider, V+ is connected to the voltage source and V– is connected to the output voltage ($V_{TEMP}$). Figure 11-1 shows the device layout.

### 11.2 Layout Example

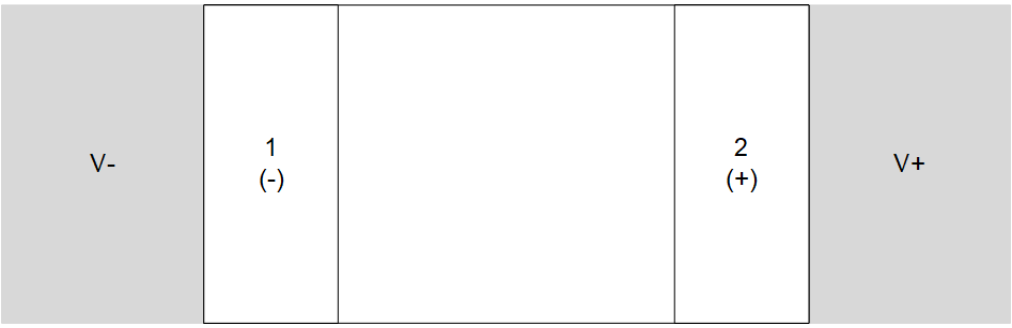


**Figure 11-1. DEC Package Recommended Layout**

# 12 Device and Documentation Support

## 12.1 Receiving Notification of Documentation Updates

To receive notification of documentation updates, navigate to the device product folder on ti.com. Click on *Subscribe to updates* to register and receive a weekly digest of any product information that has changed. For change details, review the revision history included in any revised document.

## 12.2 Support Resources

TI E2E™ support forums are an engineer's go-to source for fast, verified answers and design help — straight from the experts. Search existing answers or ask your own question to get the quick design help you need.

Linked content is provided "AS IS" by the respective contributors. They do not constitute TI specifications and do not necessarily reflect TI's views; see TI's Terms of Use.

## 12.3 Trademarks

TI E2E™ is a trademark of Texas Instruments.
All trademarks are the property of their respective owners.

## 12.4 Electrostatic Discharge Caution

This integrated circuit can be damaged by ESD. Texas Instruments recommends that all integrated circuits be handled with appropriate precautions. Failure to observe proper handling and installation procedures can cause damage.

ESD damage can range from subtle performance degradation to complete device failure. Precision integrated circuits may be more susceptible to damage because very small parametric changes could cause the device not to meet its published specifications.

## 12.5 Glossary

**TI Glossary** This glossary lists and explains terms, acronyms, and definitions.

# 13 Mechanical, Packaging, and Orderable Information

The following pages include mechanical, packaging, and orderable information. This information is the most current data available for the designated devices. This data is subject to change without notice and revision of this document. For browser-based versions of this data sheet, refer to the left-hand navigation.


Copyright © 2020 Texas Instruments Incorporated

## PACKAGING INFORMATION

| Orderable part number | Status (1) | Material type (2) | Package \| Pins | Package qty \| Carrier | RoHS (3) | Lead finish/ Ball material (4) | MSL rating/ Peak reflow (5) | Op temp (°C) | Part marking (6) |
|---|---|---|---|---|---|---|---|---|---|
| TMP6331DECR | Active | Production | X1SON (DEC) \| 2 | 10000 \| LARGE T&R | Yes | NIPDAU | Level-1-260C-UNLIM | -40 to 125 | HC |
| TMP6331DECR.A | Active | Production | X1SON (DEC) \| 2 | 10000 \| LARGE T&R | Yes | NIPDAU | Level-1-260C-UNLIM | -40 to 125 | HC |
| TMP6331DECT | Obsolete | Production | X1SON (DEC) \| 2 | - | - | Call TI | Call TI | -40 to 125 | HC |
| TMP6331DYAR | Active | Production | SOT-5X3 (DYA) \| 2 | 3000 \| LARGE T&R | Yes | SN | Level-3-260C-168 HR | -40 to 150 | 1HG |
| TMP6331DYAR.A | Active | Production | SOT-5X3 (DYA) \| 2 | 3000 \| LARGE T&R | Yes | SN | Level-3-260C-168 HR | -40 to 150 | 1HG |
| TMP6331DYAT | Obsolete | Production | SOT-5X3 (DYA) \| 2 | - | - | Call TI | Call TI | -40 to 150 | 1HG |

(1) **Status:** For more details on status, see our product life cycle.

(2) **Material type:** When designated, preproduction parts are prototypes/experimental devices, and are not yet approved or released for full production. Testing and final process, including without limitation quality assurance, reliability performance testing, and/or process qualification, may not yet be complete, and this item is subject to further changes or possible discontinuation. If available for ordering, purchases will be subject to an additional waiver at checkout, and are intended for early internal evaluation purposes only. These items are sold without warranties of any kind.

(3) **RoHS values:** Yes, No, RoHS Exempt. See the TI RoHS Statement for additional information and value definition.

(4) **Lead finish/Ball material:** Parts may have multiple material finish options. Finish options are separated by a vertical ruled line. Lead finish/Ball material values may wrap to two lines if the finish value exceeds the maximum column width.

(5) **MSL rating/Peak reflow:** The moisture sensitivity level ratings and peak solder (reflow) temperatures. In the event that a part has multiple moisture sensitivity ratings, only the lowest level per JEDEC standards is shown. Refer to the shipping label for the actual reflow temperature that will be used to mount the part to the printed circuit board.

(6) **Part marking:** There may be an additional marking, which relates to the logo, the lot trace code information, or the environmental category of the part.

Multiple part markings will be inside parentheses. Only one part marking contained in parentheses and separated by a "~" will appear on a part. If a line is indented then it is a continuation of the previous line and the two combined represent the entire part marking for that device.

**Important Information and Disclaimer:**The information provided on this page represents TI's knowledge and belief as of the date that it is provided. TI bases its knowledge and belief on information provided by third parties, and makes no representation or warranty as to the accuracy of such information. Efforts are underway to better integrate information from third parties. TI has taken and continues to take reasonable steps to provide representative and accurate information but may not have conducted destructive testing or chemical analysis on incoming materials and chemicals. TI and TI suppliers consider certain information to be proprietary, and thus CAS numbers and other limited information may not be available for release.

In no event shall TI's liability arising out of such information exceed the total purchase price of the TI part(s) at issue in this document sold by TI to Customer on an annual basis.

**OTHER QUALIFIED VERSIONS OF TMP63 :**

- Automotive : TMP63-Q1

NOTE: Qualified Version Definitions:

- Automotive - Q100 devices qualified for high-reliability automotive applications targeting zero defects

## TAPE AND REEL INFORMATION

**REEL DIMENSIONS**

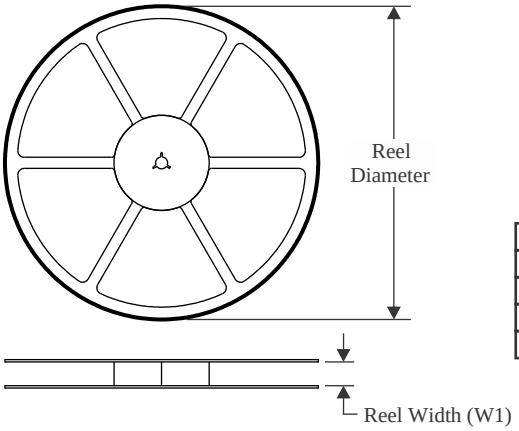


**TAPE DIMENSIONS**

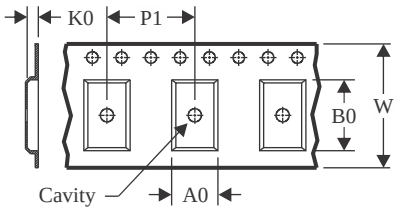


| | |
|---|---|
| A0 | Dimension designed to accommodate the component width |
| B0 | Dimension designed to accommodate the component length |
| K0 | Dimension designed to accommodate the component thickness |
| W | Overall width of the carrier tape |
| P1 | Pitch between successive cavity centers |

**QUADRANT ASSIGNMENTS FOR PIN 1 ORIENTATION IN TAPE**

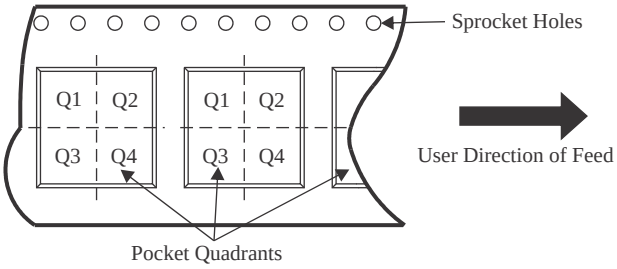


*All dimensions are nominal

| Device | Package Type | Package Drawing | Pins | SPQ | Reel Diameter (mm) | Reel Width W1 (mm) | A0 (mm) | B0 (mm) | K0 (mm) | P1 (mm) | W (mm) | Pin1 Quadrant |
|---|---|---|---|---|---|---|---|---|---|---|---|---|
| TMP6331DECR | X1SON | DEC | 2 | 10000 | 178.0 | 8.4 | 0.7 | 1.15 | 0.47 | 2.0 | 8.0 | Q1 |

TAPE AND REEL BOX DIMENSIONS

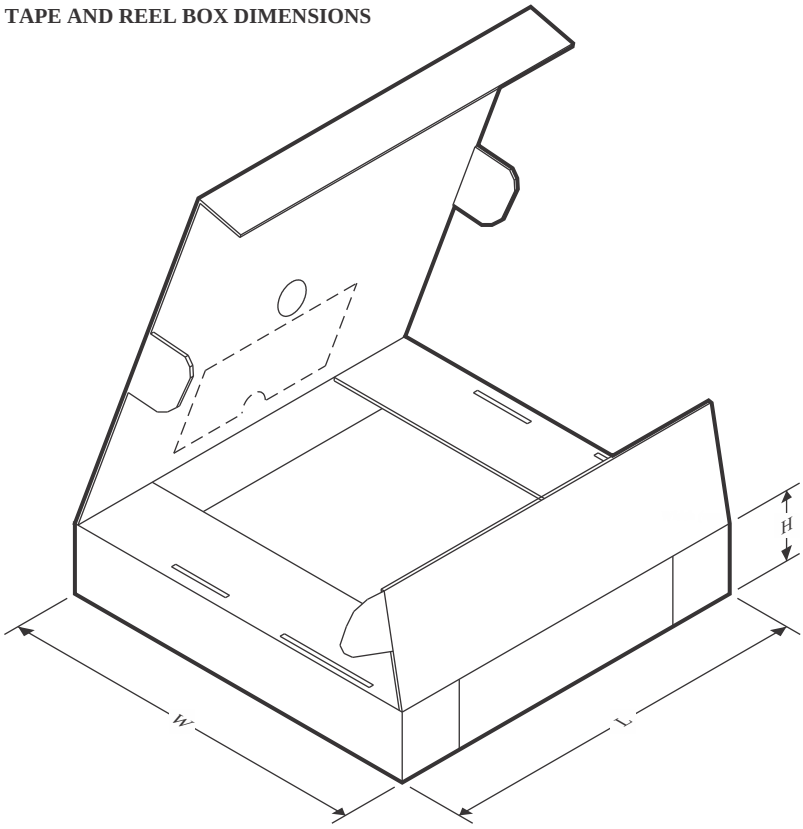


*All dimensions are nominal

| Device | Package Type | Package Drawing | Pins | SPQ | Length (mm) | Width (mm) | Height (mm) |
|---|---|---|---|---|---|---|---|
| TMP6331DECR | X1SON | DEC | 2 | 10000 | 205.0 | 200.0 | 33.0 |

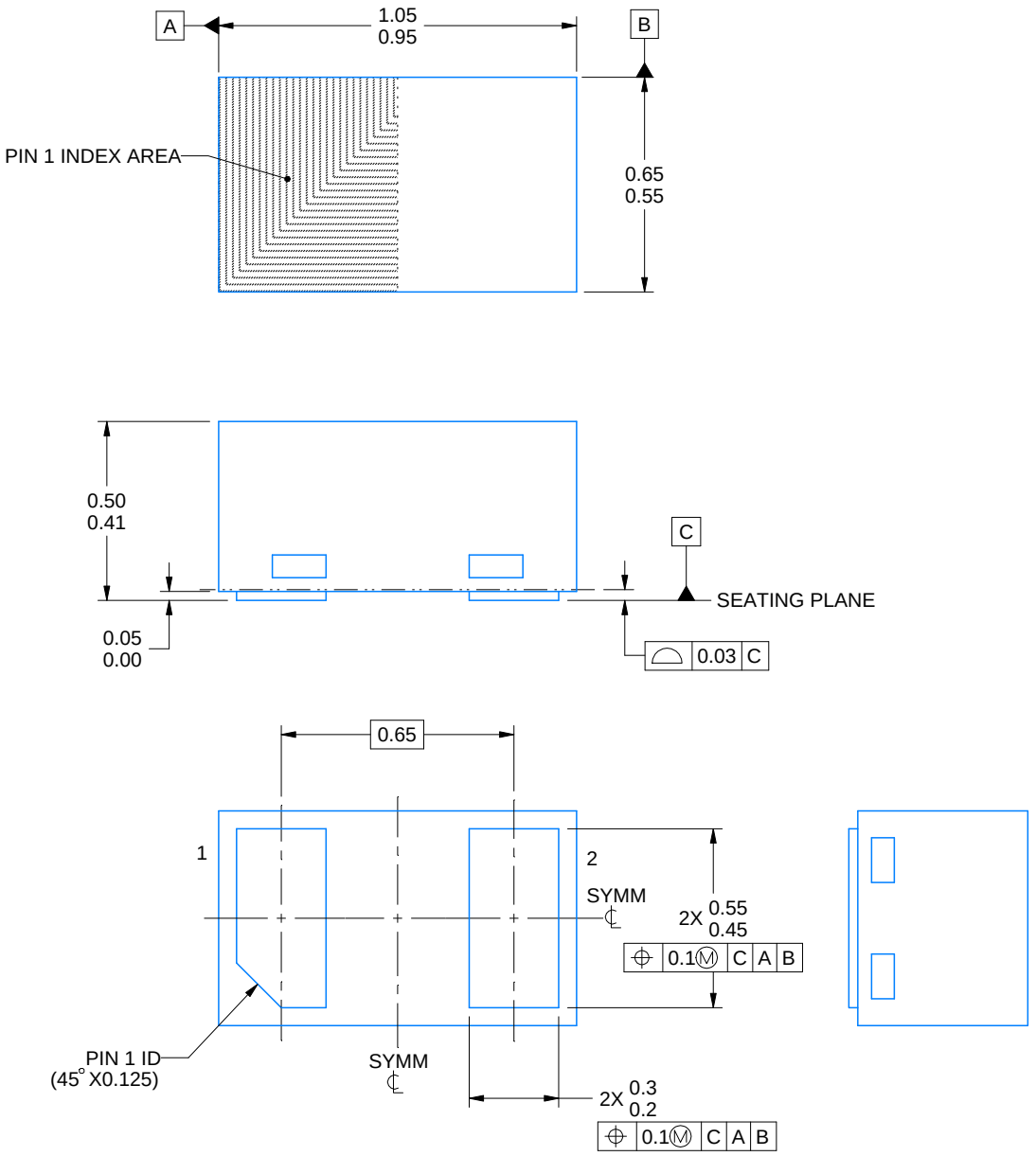


4224506/A 08/2018

NOTES:

1. All linear dimensions are in millimeters. Any dimensions in parenthesis are for reference only. Dimensioning and tolerancing per ASME Y14.5M
2. This drawing is subject to change without notice.

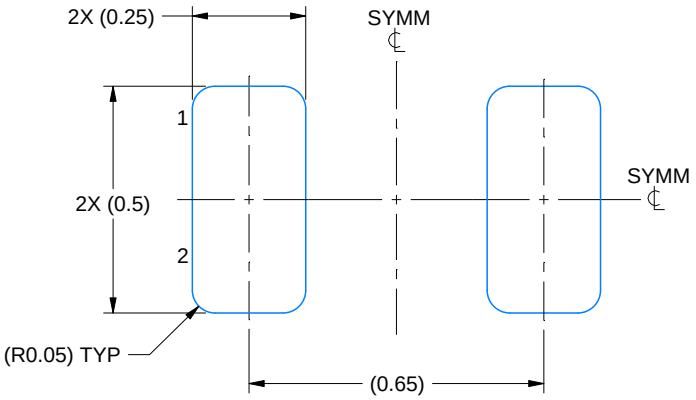


LAND PATTERN EXAMPLE
EXPOSED METAL SHOWN
SCALE:60X

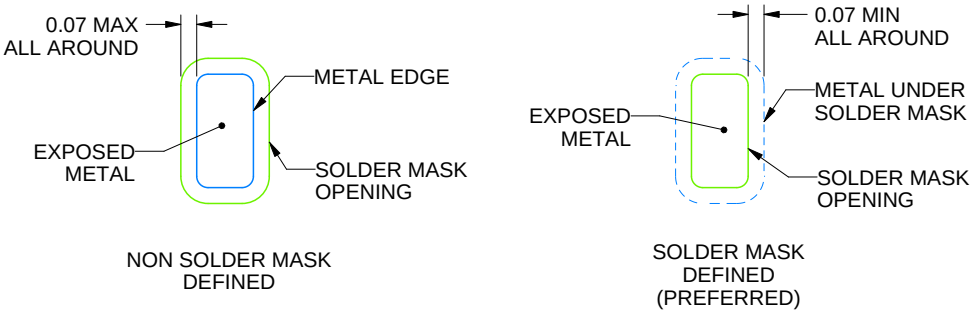


SOLDER MASK DETAILS

4224506/A 08/2018

NOTES: (continued)

3. For more information, see Texas Instruments literature number SLUA271 (www.ti.com/lit/slua271).
4. Vias are optional depending on application, refer to device data sheet. If any vias are implemented, refer to their locations shown on this view. It is recommended that vias under paste be filled, plugged or tented.

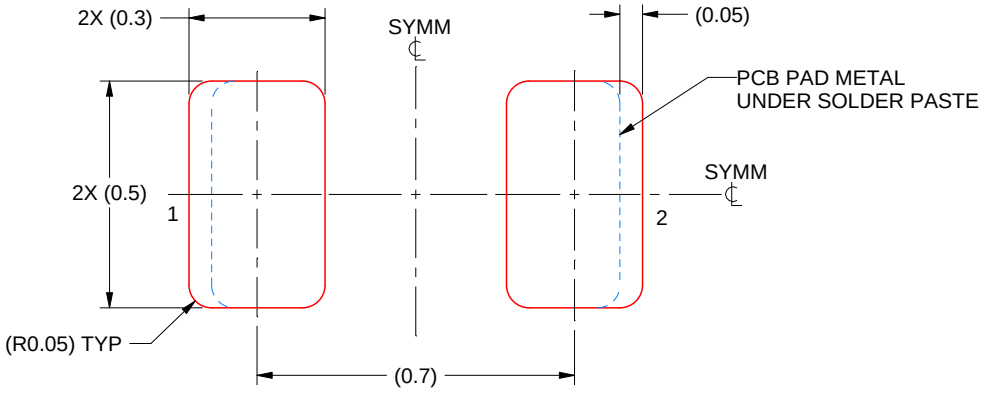


SOLDER PASTE EXAMPLE
BASED ON 0.1 mm THICK STENCIL
SCALE:60X

4224506/A 08/2018

NOTES: (continued)

5. Laser cutting apertures with trapezoidal walls and rounded corners may offer better paste release. IPC-7525 may have alternate design recommendations.

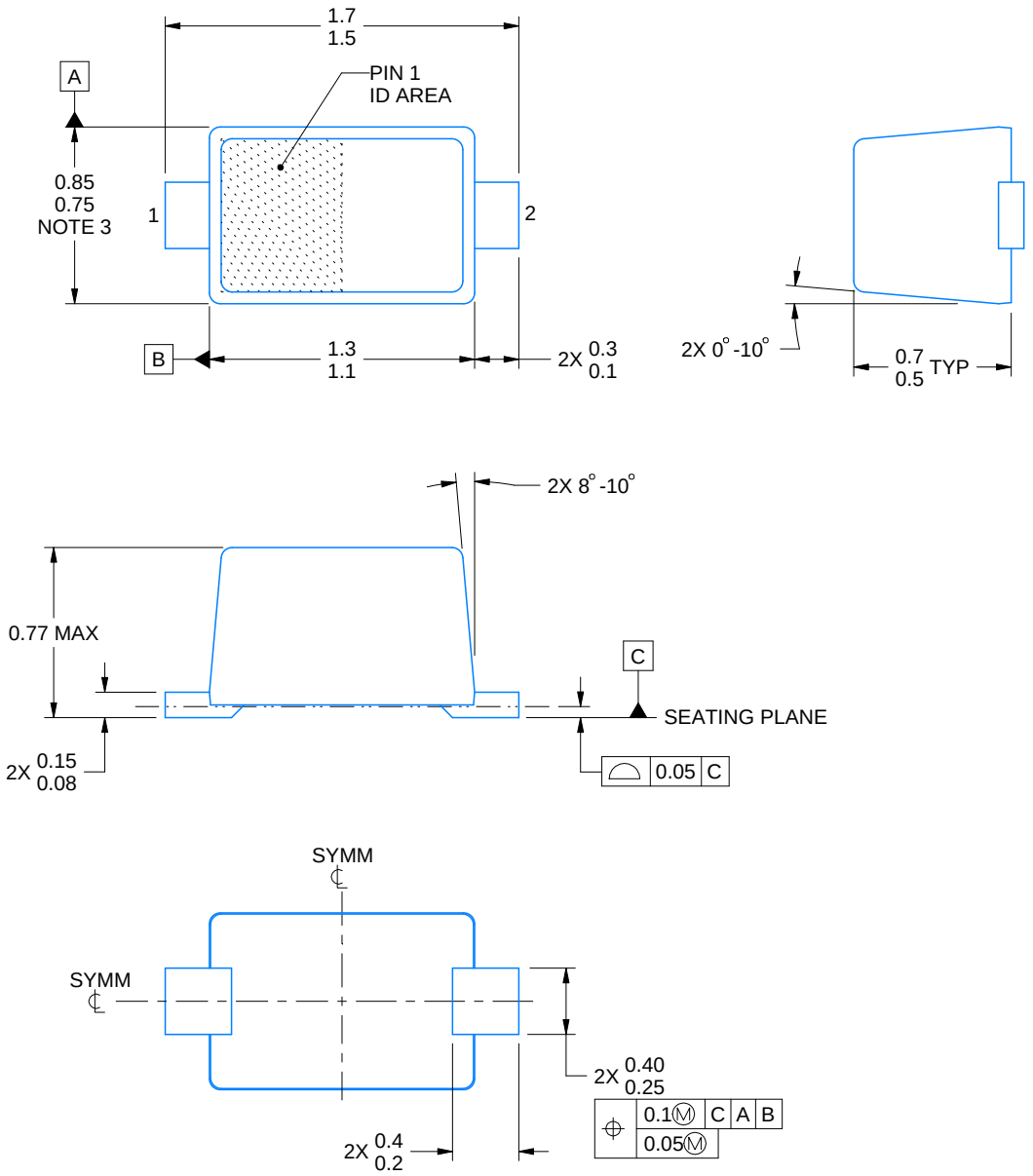


4224978/D 08/2026

NOTES:

1. All linear dimensions are in millimeters. Any dimensions in parenthesis are for reference only. Dimensioning and tolerancing per ASME Y14.5M.
2. This drawing is subject to change without notice.
3. This dimension does not include mold flash, protrusions, or gate burrs. Mold flash, protrusions, or gate burrs shall not exceed 0.15 mm per side.
4. Reference JEITA SC-79 registration except for package height

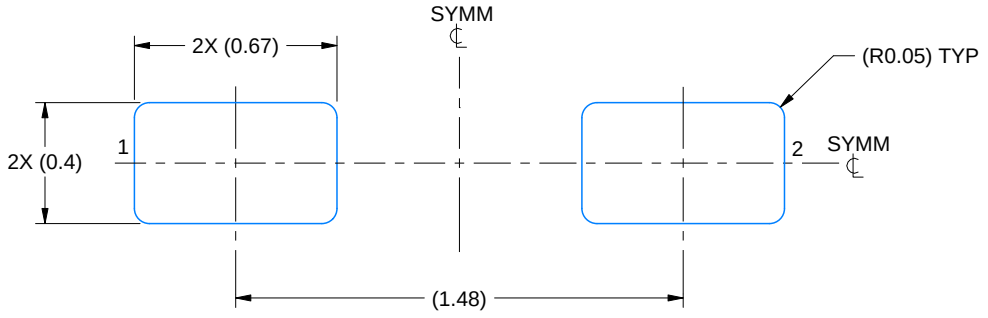


LAND PATTERN EXAMPLE
SCALE:40X

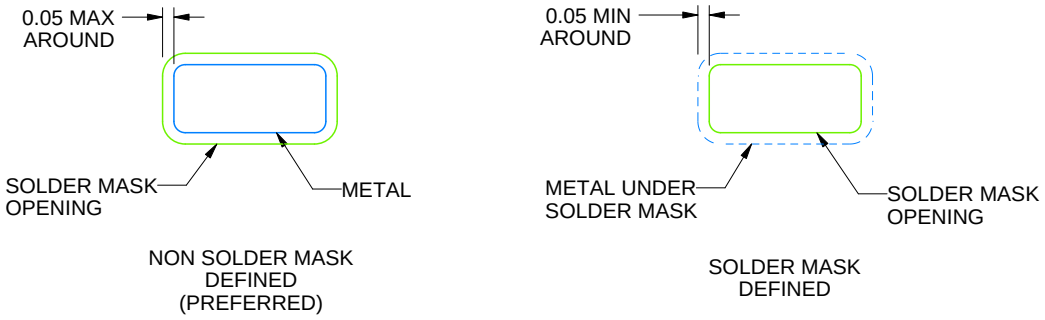


SOLDERMASK DETAILS

4224978/D 08/2026

NOTES: (continued)

5. Publication IPC-7351 may have alternate designs.
6. Solder mask tolerances between and around signal pads can vary based on board fabrication site.

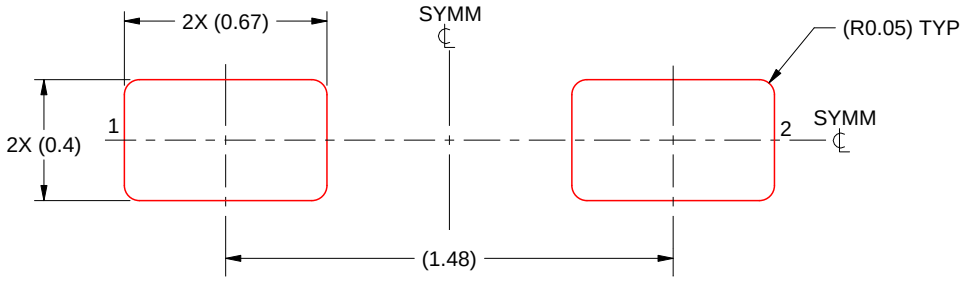


SOLDER PASTE EXAMPLE
BASED ON 0.1 mm THICK STENCIL
SCALE:40X

4224978/D 08/2026

NOTES: (continued)

7. Laser cutting apertures with trapezoidal walls and rounded corners may offer better paste release. IPC-7525 may have alternate design recommendations.
8. Board assembly site may have different recommendations for stencil design.

# IMPORTANT NOTICE AND DISCLAIMER

TI PROVIDES TECHNICAL AND RELIABILITY DATA (INCLUDING DATASHEETS), DESIGN RESOURCES (INCLUDING REFERENCE DESIGNS), APPLICATION OR OTHER DESIGN ADVICE, WEB TOOLS, SAFETY INFORMATION, AND OTHER RESOURCES “AS IS” AND WITH ALL FAULTS, AND DISCLAIMS ALL WARRANTIES, EXPRESS AND IMPLIED, INCLUDING WITHOUT LIMITATION ANY IMPLIED WARRANTIES OF MERCHANTABILITY, FITNESS FOR A PARTICULAR PURPOSE OR NON-INFRINGEMENT OF THIRD PARTY INTELLECTUAL PROPERTY RIGHTS.

These resources are intended for skilled developers designing with TI products. You are solely responsible for (1) selecting the appropriate TI products for your application, (2) designing, validating and testing your application, and (3) ensuring your application meets applicable standards, and any other safety, security, regulatory or other requirements.

These resources are subject to change without notice. TI grants you permission to use these resources only for development of an application that uses the TI products described in the resource. Other reproduction and display of these resources is prohibited. No license is granted to any other TI intellectual property right or to any third party intellectual property right. TI disclaims responsibility for, and you fully indemnify TI and its representatives against any claims, damages, costs, losses, and liabilities arising out of your use of these resources.

TI’s products are provided subject to TI’s Terms of Sale, TI’s General Quality Guidelines, or other applicable terms available either on ti.com or provided in conjunction with such TI products. TI’s provision of these resources does not expand or otherwise alter TI’s applicable warranties or warranty disclaimers for TI products. Unless TI explicitly designates a product as custom or customer-specified, TI products are standard, catalog, general purpose devices.

TI objects to and rejects any additional or different terms you may propose.

Copyright © 2026, Texas Instruments Incorporated

Last updated 10/2025