TMS320F28P55x Real-Time Microcontrollers

1 Features

- Real-time processing:
  - 150MHz C28x 32-bit DSP CPU
  - Equivalent to 300MHz Arm® Cortex®-M7 based device on real-time signal chain performance (see the *Real-time Benchmarks Showcasing C2000™ Control MCU's Optimized Signal Chain* Application Note
  - IEEE 754 single-precision Floating-Point Unit (FPU32)
  - Trigonometric Math Unit (TMU)
    - Support for Nonlinear Proportional Integral Derivative (NLPID) control
  - CRC Engine and Instructions (VCRC)
- Programmable Control Law Accelerator (CLA)
  - 150MHz
  - Equivalent to 200MHz Arm® Cortex®-M7 based device on real-time signal chain performance (see the *Real-time Benchmarks Showcasing C2000™ Control MCU's Optimized Signal Chain* Application Note
  - IEEE 754 single-precision floating-point instructions
  - Executes code independently of main CPU
- On-chip memory
  - 1088KB of flash (ECC-protected) across five independent banks
    - Four 256KB banks
    - One 64KB bank, ideal of LFU/Bootloaders/ data
  - 8KB of OTP (One Time Programmable flash memory)
  - 133KB of RAM (ECC/Parity protected)
- Security
  - Secure Boot
  - JTAG Lock
  - Advanced Encryption Standard (AES) accelerator
  - Unique Identification (UID) number
- Clock and system control
  - Two internal 10MHz oscillators
  - Crystal oscillator or external clock input
  - Windowed watchdog timer module
  - Missing clock detection circuitry
  - Dual-clock Comparator (DCC)
- 3.3V I/O design
  - Internal VREG generation allows for single-supply design
  - Brownout reset (BOR) circuit
  - 5V fail-safe and tolerant capability on 4 GPIOs for PMBUS/I2C support
  - Configurable 1.35V V_{IH} on 4 GPIOs
- System peripherals
  - 6-channel Direct Memory Access (DMA) controller
  - 91 individually programmable multiplexed General-Purpose Input/Output (GPIO) pins (22 shared with Analog)
  - 17 digital inputs on analog pins
  - Enhanced Peripheral Interrupt Expansion (ePIE)
  - Multiple low-power mode (LPM) support
- Communications peripherals
  - One Power-Management Bus (PMBus) interface
    - Fast Plus Mode Support - 1MHz SCL
    - 5V/3.3V/1.35V V_{IH} support on select pins
  - Two Inter-integrated Circuit (I2C) interfaces
  - Two Controller Area Network with Flexible Data-Rate (CAN FD/MCAN) bus port
    - 4KB message RAM per MCAN module, independent of system memory
    - Ability to re-use RAM for CPU data variables if MCAN is not used
  - One Universal Serial Bus (USB 2.0 MAC + PHY)
  - Two Serial Peripheral Interface (SPI) ports
  - Three UART-compatible Serial Communication Interface (SCI)
  - One UART-compatible Local Interconnect Network (LIN) interface
  - Fast Serial Interface (FSI) with one transmitter and one receiver (up to 200Mbps)
- Analog system
  - Five 3.9MSPS, 12-bit Analog-to-Digital Converters (ADCs)
    - Up to 39 external channels (includes one gpdac output)
    - Four integrated Post-Processing Blocks (PPB) per ADC
  - Four windowed comparators (CMPSS) with 12-bit reference Digital-to-Analog Converters (DACs)
    - Digital glitch filters
    - Low DAC output to pin capability on CMPSS1
  - One 12-bit buffered DAC output

An IMPORTANT NOTICE at the end of this data sheet addresses availability, warranty, changes, use in safety-critical applications, intellectual property matters and other important disclaimers. PRODUCTION DATA.

  - Three Programmable Gain Amplifiers (PGAs)
    - Unity gain support
    - Inverting and non-inverting gain mode support
    - Programmable output filtering
- Enhanced control peripherals
  - 24 ePWM channels with 12 channels that have high-resolution capability (150ps resolution)
    - Integrated dead-band support
    - Integrated hardware trip zones (TZs)
  - Two Enhanced Capture (eCAP) modules
  - Three Enhanced Quadrature Encoder Pulse (eQEP) modules with support for CW/CCW operation modes
  - Embedded Pattern Generator (EPG)
- Configurable Logic Block (CLB)
  - 2 tiles
  - Augments existing peripheral capability
  - Supports position manager solutions
- TinyEngine™ NPU (Neural-network Processing Unit)
  - Highly Optimized for Deep Convolutional Neural Networks (CNN)
  - Variable weights and data lengths
    - 8-bit and 4-bit weights
    - 8-bit and 4-bit data
  - 600MOPS (Mega Operations Per Second) at 75MHz on 8bWx8bD
  - 1200MOPS at 75MHz on 4bWx8bD
  - Up to 10x NN inferencing performance improvement vs SW techniques
  - No direct coding required, TI AI tools generate FW libraries
  - Real-time control focused Edge AI Models
    - ARC fault example
    - Motor fault example
- Live Firmware Update (LFU)
- Diagnostic features
  - Memory Power-On Self-Test (MPOST)
- Functional Safety-Compliant [1]
  - Developed for functional safety applications
  - Documentation available to aid ISO 26262 and IEC 61508 system design
  - Systematic capability up to ASIL D and SIL 3
  - Hardware integrity up to ASIL B and SIL 2
- Safety-related certification
  - ISO 26262 certification up to ASIL B by TÜV SÜD
- Package options:
  - 128-pin Thin Quad Flatpack (TQFP) [PDT suffix]
  - 100-pin Low-profile Quad Flatpack (LQFP) [PZ suffix]
  - 80-pin TQFP [PNA suffix]
  - 64-pin LQFP [PM suffix]
  - 56-pin Very Thin Quad Flatpack No-Lead (VQFN) [RSH suffix]
- Temperature options:
  - Junction (T_J): –40°C to 150°C

2 Applications

- Appliances
  - Air conditioner outdoor unit
- Building automation
  - Door operator drive control
- Industrial machine & machine tools
  - Automated sorting equipment
  - Textile machine
- AC inverter & VF drives
  - AC drive control module
  - AC drive position feedback
  - AC drive power stage module
- Linear motor transport systems
  - Linear motor power stage
- Single & multi axis servo drives
  - Servo drive position feedback
  - Servo drive power stage module
- Speed controlled BLDC drives
  - AC-input BLDC motor drive
  - DC-input BLDC motor drive
- Factory automation
  - Robot servo drive
  - Mobile robot motor control
  - Position sensor
- Industrial power
  - Industrial AC-DC
- UPS
  - Three-phase UPS
  - Single-phase online UPS
- Telecom & server power
  - Merchant DC/DC
  - Merchant network & server PSU
  - Merchant telecom rectifiers
- Hybrids, electric & powertrain systems
  - DC/DC converter
  - Inverter & motor control
  - On-board (OBC) & wireless charger
  - Virtual engine sound system (VESS)
  - Engine fan
  - eTurbo/charger
  - Pump
  - Electric power steering (EPS)

[1] Refer to the *Functional Safety Manual for TMS320F28P55x Real-Time Microcontrollers* and the TÜV *certification* for the exact part numbers that are Functional Safety-Compliant or Functional Safety Quality-Managed.

Copyright © 2026 Texas Instruments Incorporated

- Infotainment and cluster
  - Head-up display
  - Automotive head unit
  - Automotive external amplifier
- Body electronics & lighting
  - Automotive HVAC compressor module
  - DC/AC inverter
  - Headlight
- ADAS
  - Mechanically scanning LIDAR
- EV charging infrastructure
  - AC charging (pile) station
  - DC charging (pile) station
  - EV charging station power module
  - Wireless EV charging station
- Renewable energy storage
  - Energy storage power conversion system (PCS)
  - Portable Power Station
- Solar energy
  - Central inverter
  - Micro inverter
  - Solar power optimizer
  - Solar arc protection
  - Rapid shutdown
  - String inverter

3 Description

The TMS320F28P55x (F28P55x) is a member of the C2000™ real-time microcontroller family of scalable, ultra-low latency devices designed for efficiency in power electronics, including but not limited to: high power density, high switching frequencies, and supporting the use of GaN and SiC technologies.

These include such applications as:

- Motor drives
- Appliances
- Hybrid, electric & powertrain systems
- Solar & EV charging
- Digital power
- Body electronics & lighting
- Test & measurement

The real-time control subsystem is based on TI's 32-bit C28x DSP core, which provides 150MHz of signal-processing performance for floating- or fixed-point code running from either on-chip flash or SRAM. The C28x CPU is further boosted by the Floating-Point Unit (FPU), Trigonometric Math Unit (TMU), and VCRC (Cyclical Redundancy Check) extended instruction sets, speeding up common algorithms key to real-time control systems.

The CLA allows significant offloading of common tasks from the main C28x CPU. The CLA is an independent 32-bit floating-point math accelerator that executes in parallel with the CPU. Additionally, the CLA has its own dedicated memory resources and it can directly access the key peripherals that are required in a typical control system. Support of a subset of ANSI C is standard, as are key features like hardware breakpoints and hardware task-switching.

The TinyEngine™ NPU (Neural-network Processing Unit) can support machine-learning inferencing using pre-trained models. Capable of 600–1200MOPS (Mega Operations Per Second) with model support for ARC fault detection or Motor Fault detection, the TinyEngine™ NPU provides up to 10x NN inferencing cycle improvement versus a SW-only-based implementation. Load and train models with the Edge AI Studio - Model Composer from TI or with the Tiny ML Modelmaker for an advanced set of capabilities. Source code for the C28x is generated by these tools, no manual coding is necessary. For customers who rely on their own AI training framework, TI's Neural Network Compiler can help port your AI model to be compatible with many C28x-based MCUs. For those interested in reference solutions, request access to TI's Arc Fault Detection Project or the Motor Bearing Fault Detection Project.

The F28P55x supports up to 1088KB of flash memory divided into four 256KB banks plus one 64KB bank, which enable programming one bank and execution in another bank in parallel. Up to 133KB of on-chip SRAM is also available to supplement the flash memory.

The Live Firmware Update hardware enhancements on F28P55x allow fast context switching from the old firmware to the new firmware to minimize application downtime when updating the device firmware.

Copyright © 2026 Texas Instruments Incorporated

High-performance analog blocks are integrated on the F28P55x real-time microcontroller (MCU) and are closely coupled with the processing and PWM units to provide optimal real-time signal chain performance. Twenty-four PWM channels, all supporting frequency-independent resolution modes, enable control of various power stages from a 3-phase inverter to power factor correction and advanced multilevel power topologies.

The inclusion of the Configurable Logic Block (CLB) allows the user to add custom logic and potentially integrate FPGA-like functions into the C2000 real-time MCU.

Interfacing is supported through various industry-standard communication ports (such as SPI, SCI, I2C, PMBus, LIN, and CAN FD) and offers multiple pin-muxing options for optimal signal placement.

Want to learn more about features that make C2000 Real-Time MCUs the right choice for your real-time control system? Check out *The Essential Guide for Developing With C2000™ Real-Time Microcontrollers* and visit the C2000™ real-time control MCUs page.

The *Getting Started With C2000™ Real-Time Control Microcontrollers (MCUs) Getting Started Guide* covers all aspects of development with C2000 devices from hardware to support resources. In addition to key reference documents, each section provides relevant links and resources to further expand on the information covered.

Ready to get started? Check out the TMDSCNCD28P55X evaluation board or the LAUNCHXL-F28P55X development kit, and download C2000Ware.

Package Information

PART NUMBER(1)	PACKAGE(2)	PACKAGE SIZE(3)
TMS320F28P559SJ-Q1	PDT (QFP, 128)	16mm x 16mm
	PZ (QFP, 100)	16mm x 16mm
	PNA (QFP, 80)	12mm x 12mm
	PM (QFP, 64)	12mm x 12mm
TMS320F28P550SJ	PDT (QFP, 128)	16mm x 16mm
	PZ (QFP, 100)	16mm x 16mm
	PNA (QFP, 80)	12mm x 12mm
	PM (QFP, 64)	12mm x 12mm
	RSH (VQFN, 56)	7mm x 7mm
TMS320F28P559SG-Q1	PDT (QFP, 128)	16mm x 16mm
	PZ (QFP, 100)	16mm x 16mm
	PNA (QFP, 80)	12mm x 12mm
	PM (QFP, 64)	12mm x 12mm
TMS320F28P550SG	PDT (QFP, 128)	16mm x 16mm
	PZ (QFP, 100)	16mm x 16mm
	PNA (QFP, 80)	12mm x 12mm
	PM (QFP, 64)	12mm x 12mm
	RSH (VQFN, 56)	7mm x 7mm

(1) For more information on these devices, see the *Device Comparison* table.
(2) For more information, see the *Mechanical, Packaging and Orderable Information* section.
(3) Package size (length x width) is a nominal value and includes pins, where applicable

Copyright © 2026 Texas Instruments Incorporated

3.1 Functional Block Diagram

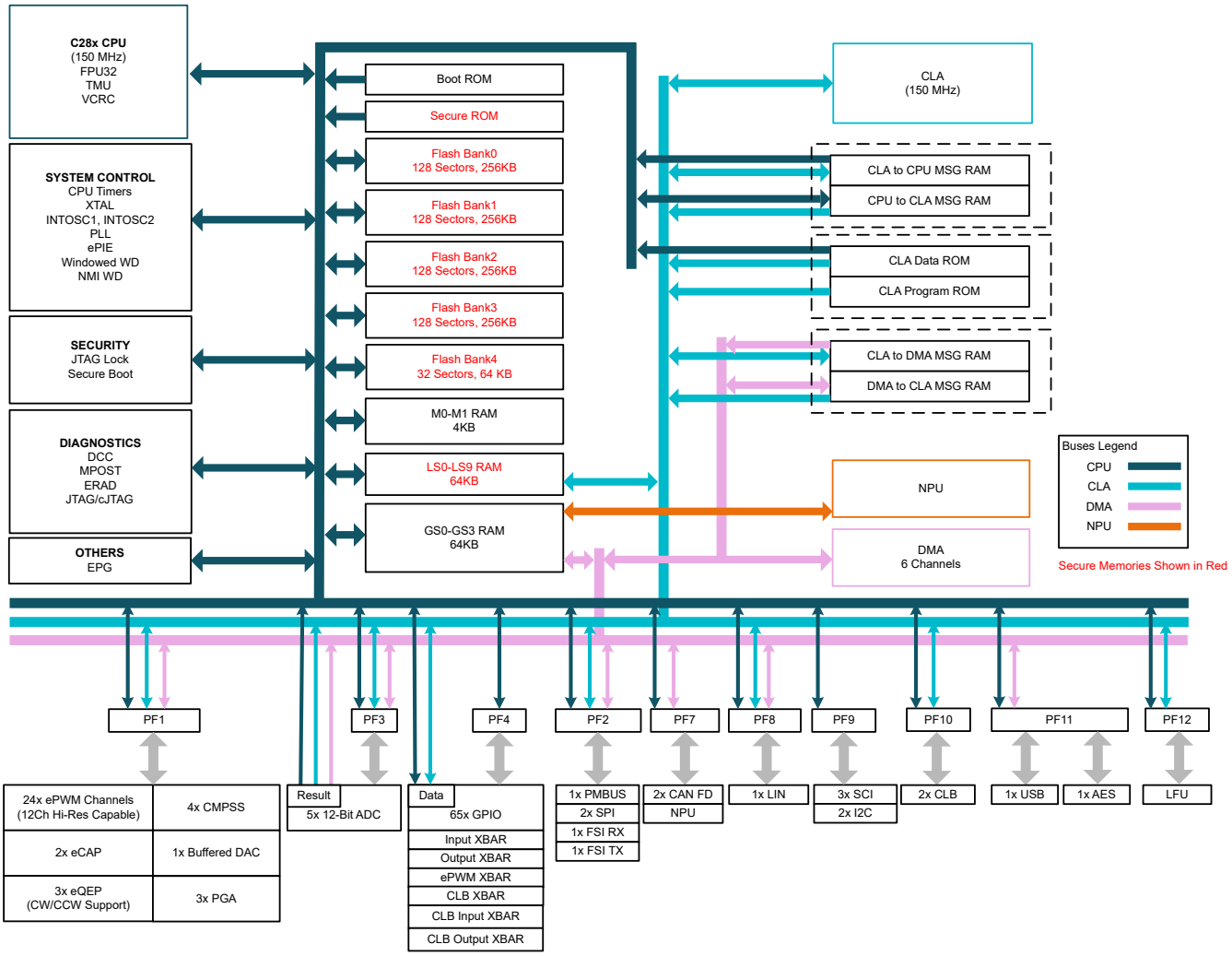

A. The internal DAC from one of the CMPSS modules can be configured as an output DAC.
B. The LIN module can also be used as a SCI module.

Figure 3-1. Functional Block Diagram

Table of Contents

1 Features....1
2 Applications....2
3 Description....3
3.1 Functional Block Diagram....5
4 Device Comparison....7
4.1 Related Products....9
5 Pin Configuration and Functions....10
5.1 Pin Diagrams....10
5.2 Pin Attributes....15
5.3 Signal Descriptions....41
5.4 Pin Multiplexing....53
5.5 Pins With Internal Pullup and Pulldown....65
5.6 Connections for Unused Pins....66
6 Specifications....68
6.1 Absolute Maximum Ratings....68
6.2 ESD Ratings – Commercial....69
6.3 ESD Ratings – Automotive....70
6.4 Recommended Operating Conditions....71
6.5 Power Consumption Summary....72
6.6 Electrical Characteristics....79
6.7 Special Considerations for 5V Fail-Safe Pins....80
6.8 Thermal Resistance Characteristics for PDT Package....82
6.9 Thermal Resistance Characteristics for PZ Package....82
6.10 Thermal Resistance Characteristics for PNA Package....82
6.11 Thermal Resistance Characteristics for PM Package....83
6.12 Thermal Resistance Characteristics for RSH Package....83
6.13 Thermal Design Considerations....83
6.14 System....84
6.15 Analog Peripherals....126
6.16 Control Peripherals....169
6.17 Communications Peripherals....180
7 Detailed Description....210
7.1 Overview....210
7.2 Functional Block Diagram....211
7.3 Memory....212
7.4 Identification....223
7.5 Bus Architecture – Peripheral Connectivity....224
7.6 C28x Processor....225
7.7 Control Law Accelerator (CLA)....226
7.8 Embedded Real-Time Analysis and Diagnostic (ERAD)....229
7.9 Direct Memory Access (DMA)....230
7.10 Device Boot Modes....232
7.11 Security....238
7.12 Watchdog....240
7.13 C28x Timers....241
7.14 Dual-Clock Comparator (DCC)....241
7.15 Configurable Logic Block (CLB)....243
8 Functional Safety....245
9 Reference Design....247
10 Device and Documentation Support....249
10.1 Device Nomenclature....249
10.2 Markings....250
10.3 Tools and Software....253
10.4 Documentation Support....254
10.5 Support Resources....256
10.6 Trademarks....256
10.7 Electrostatic Discharge Caution....256
10.8 Glossary....256
11 Revision History....257
12 Mechanical, Packaging, and Orderable Information....258

Copyright © 2026 Texas Instruments Incorporated

4 Device Comparison

Table 4-1. Device Comparison

FEATURE[1] [4]		F28P559SJ-Q1[3]	F28P550SJ	F28P559SG-Q1[3]	F28P550SG
C28x Subsystem					
Frequency (MHz)		150			
C28x	32-bit Floating-Point Unit (FPU)	Yes			
	VCRC	Yes			
	TMU - Type 1	Yes - Type 1 - NLPID Instruction Supported			
CLA - Type 2	Number	1: F28P559SJ9-Q1, F28P559SJ6-Q1 0: F28P559SJ2-Q1	1	1: F28P559SG9-Q1, F28P559SG8-Q1 0: F28P559SG2-Q1	1
	Frequency (MHz)	150			
6-Channel DMA - Type 0		1			
External Interrupts		5			
MIPS		300 (CPU + CLA)			
Memory					
Flash	Main Array	1MB (4 x 256KB Banks)		512KB (2 x 256KB Banks)	
	64KB Bank	F28P559SJ9-Q1, F28P550SJ9, F28P559SJ6-Q1, F28P550SJ6, F28P559SG9-Q1, F28P550SG9			
	User OTP	8KB		2KB	
RAM	Dedicated	4KB			
	Local Shared RAM	64KB			
	Message	1KB			
	Global Shared RAM	64KB		32KB	
	Total RAM	133KB		101KB	
Message RAM Types	C28x CPUs and CLAs	512 bytes (256 bytes per direction)			
	DMAs and CLAs	512 bytes (256 bytes per direction)			
ECC		FLASH, Mx RAM			
Parity		ROM, CAN RAM, Message RAM, LSx RAM, GSx RAM			
System					
Configurable Logic Block (CLB)		2 tiles - F28P559SJ9-Q1, F28P559SJ6-Q1, F28P550SJ9, F28P550SJ6, F28P559SG9-Q1, F28P550SG9, F28P559SG8-Q1, F28P550SG8			
TinyEngine™ NPU (Neural-Network Processing Unit)		1 - F28P559SJ9-Q1, F28P550SJ9, F28P559SG9-Q1, F28P550SG9			
Embedded Pattern Generator (EPG)		1			
32-bit CPU Timers		3			
Advanced Encryption Standard (AES) Accelerator		1			
Live Firmware Update (LFU) Support		Yes, with enhancements and flash bank erase time improvements			
Security for on-chip flash and RAM		Yes			
Zero-pin Boot		Yes			
Secure Boot		Yes			
JTAG Lock		Yes			
MPOST		Yes			
Embedded Real-time Analysis and Diagnostic (ERAD) - Type 2		1			
Non-maskable Interrupt Watchdog (NMIWD) timers		1			
Watchdog (WD) timers		1			
Crystal oscillator/External clock input		1			
Internal Oscillator (Optional External Precision Resistor)		2			

Copyright © 2026 Texas Instruments Incorporated

Table 4-1. Device Comparison (continued)

FEATURE[1] [4]		F28P559SJ-Q1[3]	F28P550SJ	F28P559SG-Q1[3]	F28P550SG
Digital and Analog Pin Counts					
GPIO	128-pin PDT	65		65 - F28P559SG9-Q1, F28P550SG9	
	100-pin PZ	43			
	80-pin PNA	32			
	64-pin PM	17			
	56-pin RSH	-	15	-	15
	Additional GPIO	4 (2 from cJTAG and 2 from X1/X2)			
AIO (analog with digital inputs)	128-pin PDT	17		17 - F28P559SG9-Q1, F28P550SG9	
	100-pin PZ	16			
	80-pin PNA	12			
	64-pin PM	12			
	56-pin RSH	-	12	-	12
AGPIO (analog with digital inputs and outputs)	128-pin PDT	22		22 - F28P559SG9-Q1, F28P550SG9	
	100-pin PZ	19			
	80-pin PNA	16			
	64-pin PM	16			
	56-pin RSH	-	14	-	14
C28x Analog Peripherals[5]					
Analog-to-Digital Converter (ADC) (12-bit) - Type 6	Number of ADCs	5			
	MSPS	3.9			
	Conversion Time (ns)[2]	187			
ADC Input channels (single-ended) (includes the two DAC outputs)	128-pin PDT	39		39 - F28P559SG9-Q1, F28P550SG9	
	100-pin PZ	35			
	80-pin PNA	28			
	64-pin PM	28			
	56-pin RSH		26		26
PGA - Type 2		3			
Temperature Sensor		1			
Comparator subsystem (CMPSS) (each CMPSS has two comparators and two internal DACs) - Type 6		4			
Buffered Digital-to-Analog Converter (DAC) - Type 2		1			
DAC Out from CMPSS		1			
C28x Control Peripherals[5]					
eCAP - Type 2	Total inputs	2			
ePWM/HRPWM - Type 4	Total channels	24 - F28P559SJ9-Q1, F28P559SJ6-Q1 16 - F28P559J2-Q1 (ePWM1-ePWM8)	24	24 - F28P559SG9-Q1, F28P559SG8-Q1 16 - F28P559SG2-Q1 (ePWM1-ePWM8)	24
	Channels with high-resolution capability	12- F28P559SJ9-Q1, F28P559SJ6-Q1 8 - F28P559SJ2-Q1 (HRPWM1-HRPWM4)	12	12 - F28P559SG9-Q1, F28P559SG8-Q1 8 - F28P559SG2-Q1 (HRPWM1-HRPWM4)	12
eQEP modules - Type 2		3			
C28x Communications Peripherals[5]					
CAN with Flexible Data-Rate (CAN-FD) - Type 2		2			
Fast Serial Interface (FSI) RX - Type 2		1			
Fast Serial Interface (FSI) TX - Type 2		1			
Inter-Integrated Circuit (I2C) - Type 2		2			
Local Interconnect Network (LIN) - Type 1		1			
Power Management Bus (PMBus) - Type 1		1			
Serial Communications Interface (SCI) - Type 0 (UART-compatible)		3			
Serial Peripheral Interface (SPI) - Type 2		2			
Universal Serial Bus (USB) - Type 0		1 - F28P559SJ9-Q1, F28P550SJ9, F28P559SJ6-Q1, F28P550SJ6		1 - F28P559SG9-Q1, F28P550SG9	

Copyright © 2026 Texas Instruments Incorporated

Table 4-1. Device Comparison (continued)

FEATURE(1) (4)		F28P559SJ-Q1(3)	F28P550SJ	F28P559SG-Q1(3)	F28P550SG
Temperature and Qualification					
Junction temperature (T_J)		-40°C to 150°C			
Free-Air temperature (T_A)		-40°C to 125°C			
Package Options	128-pin PDT	F28P559SJ9-Q1, F28P559SJ6-Q1, F28P559SJ2-Q1, F28P550SJ9, F28P550SJ6, F28P559SG9-Q1, F28P550SG9			
	100-pin PZ	F28P559SJ9-Q1, F28P559SJ6-Q1, F28P559SJ2-Q1, F28P550SJ9, F28P550SJ6, F28P559SG9-Q1, F28P559SG8-Q1, F28P559SG2-Q1, F28P550SG9, F28P550SG8			
	80-pin PNA	F28P559SJ9-Q1, F28P559SJ6-Q1, F28P559SJ2-Q1, F28P550SJ9, F28P550SJ6, F28P559SG9-Q1, F28P559SG8-Q1, F28P559SG2-Q1, F28P550SG9, F28P550SG8			
	64-pin PM	F28P559SJ9-Q1, F28P559SJ6-Q1, F28P559SJ2-Q1, F28P550SJ9, F28P550SJ6, F28P559SG9-Q1, F28P559SG8-Q1, F28P559SG2-Q1, F28P550SG9, F28P550SG8			
	56-pin RSH	-	F28P550SJ9, F28P550SJ6	-	F28P550SG9, F28P550SG8

(1) A type change represents a major functional feature difference in a peripheral module. Within a peripheral type, there may be minor differences between devices that do not affect the basic functionality of the module. For more information, see the *C2000 Real-Time Control Peripherals Reference Guide*.
(2) Time between start of sample-and-hold window to start of sample-and-hold window of the next conversion.
(3) The suffix -Q1 refers to AEC Q100 qualification for automotive applications.
(4) "-" on the feature entry indicates that the corresponding package type in not available.
(5) For devices that are available in more than one package, the peripheral count listed in the smaller package is reduced because the smaller package has less device pins available. The number of peripherals internally present on the device is not reduced compared to the largest package offered within a part number.

4.1 Related Products

TMS320F280013x Real-Time Microcontrollers

The F280013x has common pinouts with the F28P55x series of devices. TheF28P55x series adds CLA and DMA support, in addition to faster CPU clock speed and increased memory size. Additionally, the F28P55x has Programmable Gain Amplifiers (PGA), USB, CLB, and supports live FW update.

TMS320F280015x Real-Time Microcontrollers

The F280015x has common pinouts with the F28P55x series of devices. The F28P55x series adds CLA and DMA support, in addition to faster CPU clock speed and increased memory size. Additionally, the F28P55x has Programmable Gain Amplifiers (PGA), USB, CLB, and supports live FW update. The F280015x series has lockstep C28x CPUs for safety-related systems.

TMS320F28003x Real-Time Microcontrollers

The F28003x has common pinouts with the F28P55x series of devices. The F28P55x series has a faster overall CPU clock and increased memory options in addition to Programmable Gain Amplifiers (PGA) and USB support. The F28003x series offers BGCRC and HWBIST.

Copyright © 2026 Texas Instruments Incorporated

5 Pin Configuration and Functions

5.1 Pin Diagrams

Figure 5-1 shows the pin assignments on the 128-pin PDT thin quad flatpack. Figure 5-2 shows the pin assignments on the 100-pin PZ low-profile quad flatpack. Figure 5-3 shows the pin assignments on the 80-pin PNA thin quad flatpack. Figure 5-4 shows the pin assignments on the 64-pin PM low-profile quad flatpack. Figure 5-5 shows the pin assignments on the 56-pin RSH very thin quad flatpack no-lead.

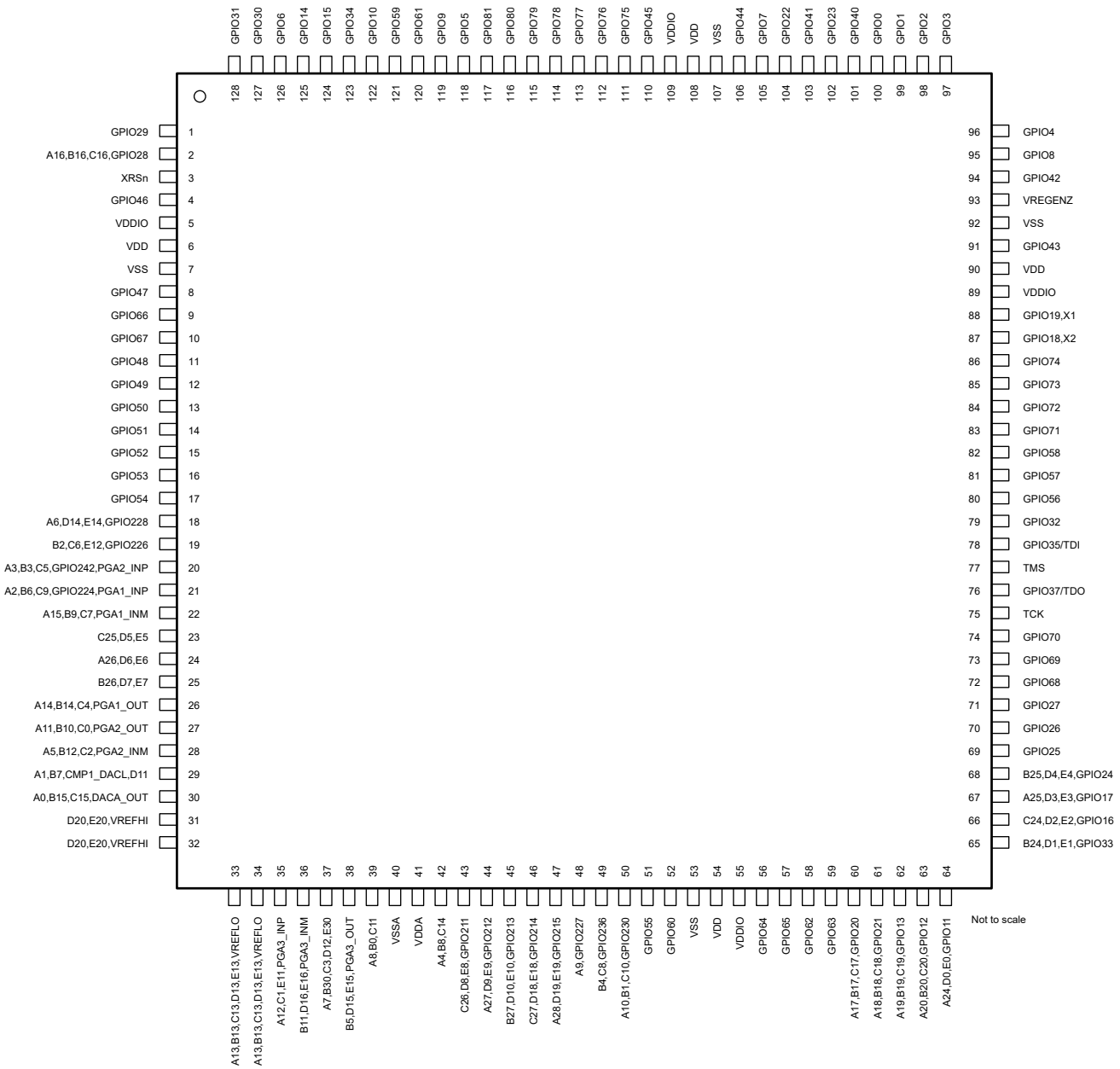

A. Only the GPIO function is shown on GPIO pins. See the *Pin Attributes* table for the complete, muxed signal name.

Figure 5-1. 128-pin PDT Thin Quad Flatpack (Top View)

Copyright © 2026 Texas Instruments Incorporated

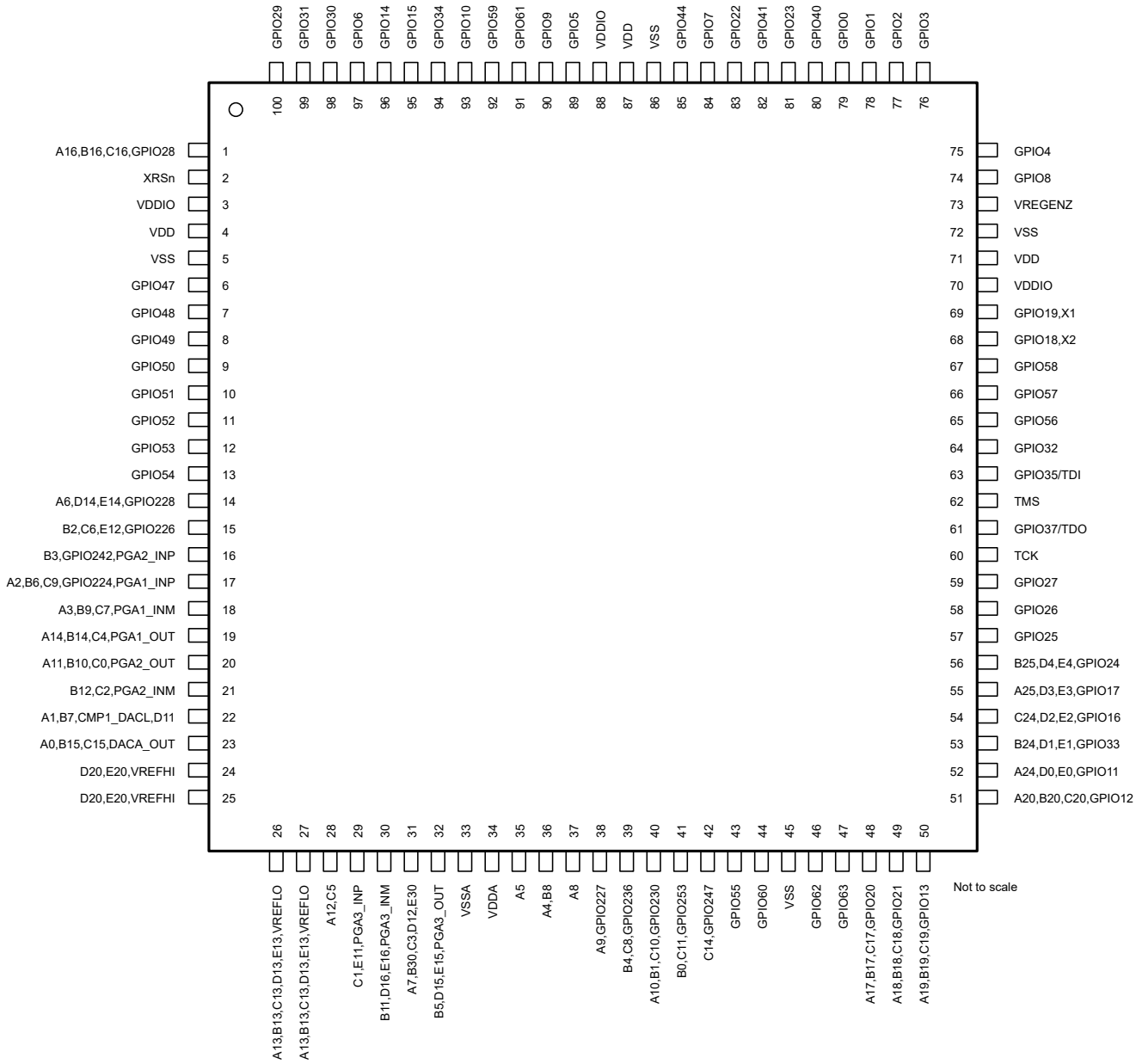

A. Only the GPIO function is shown on GPIO pins. See the *Pin Attributes* table for the complete, muxed signal name.

Figure 5-2. 100-Pin PZ Low-Profile Quad Flatpack (Top View)

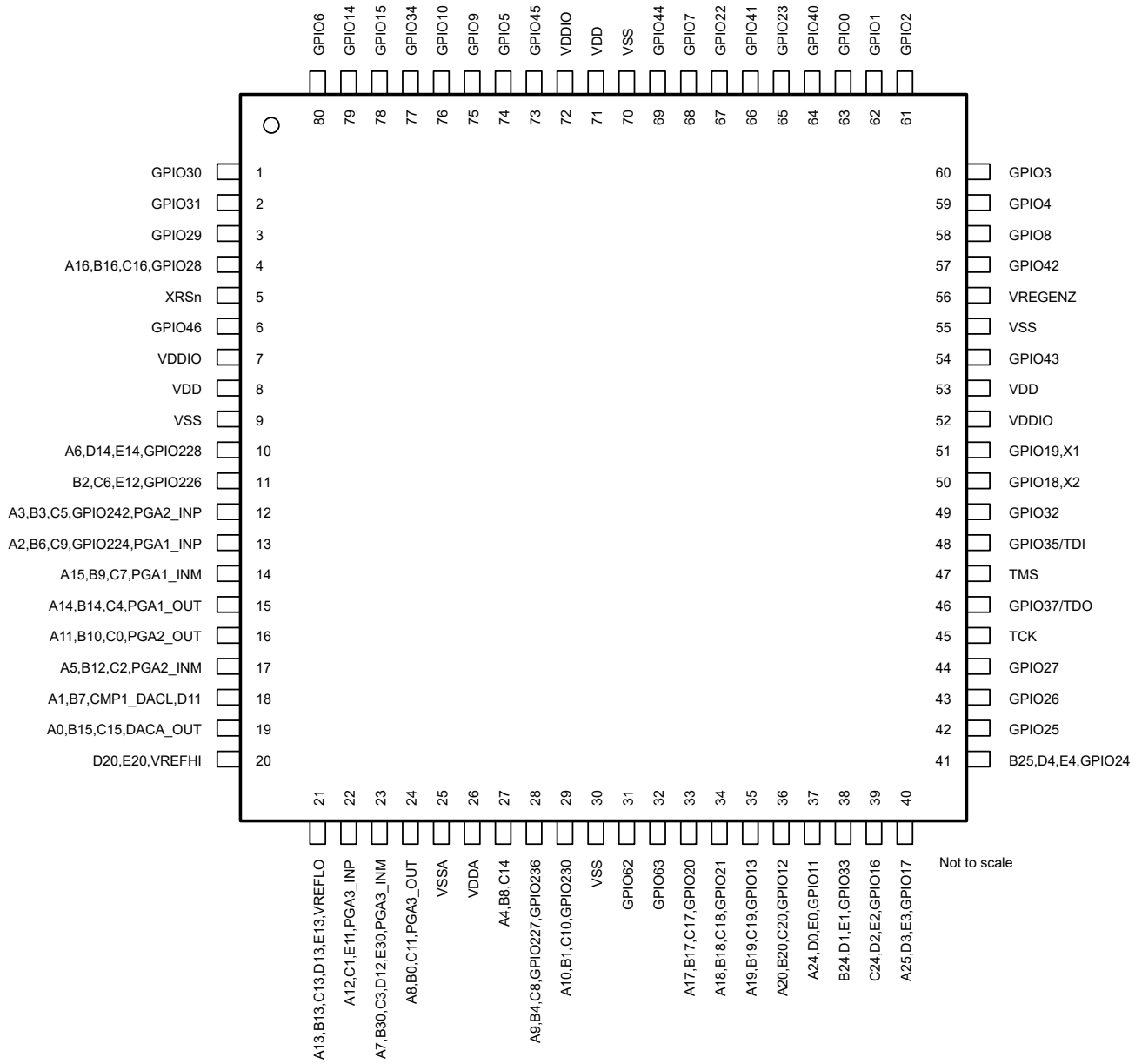

A. Only the GPIO function is shown on GPIO pins. See the *Pin Attributes* table for the complete, muxed signal name.

Figure 5-3. 80-Pin PNA Thin Quad Flatpack (Top View)

Copyright © 2026 Texas Instruments Incorporated

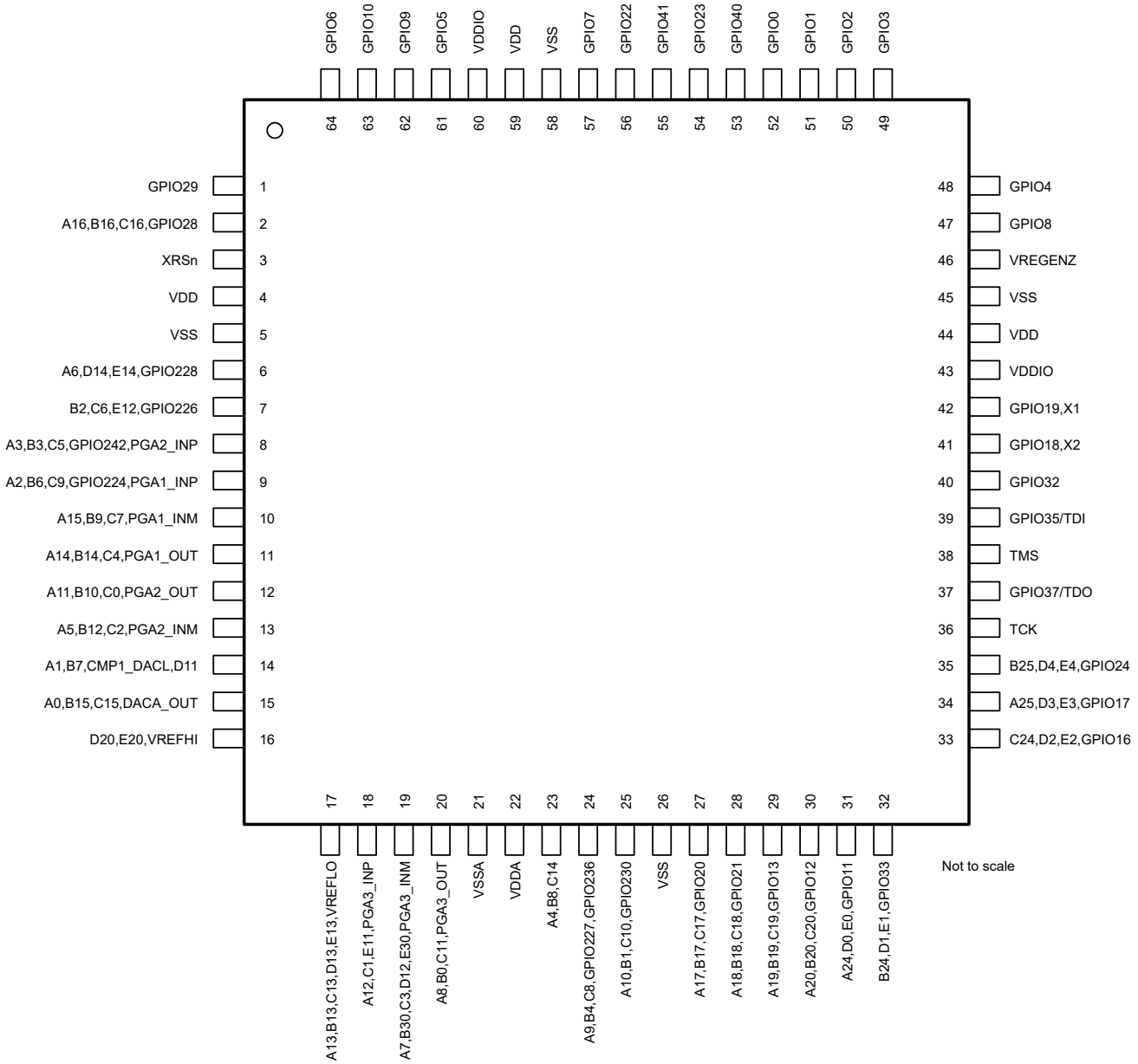

A. Only the GPIO function is shown on GPIO pins. See the *Pin Attributes* table for the complete, muxed signal name.

Figure 5-4. 64-Pin PM Low-Profile Quad Flatpack (Top View)

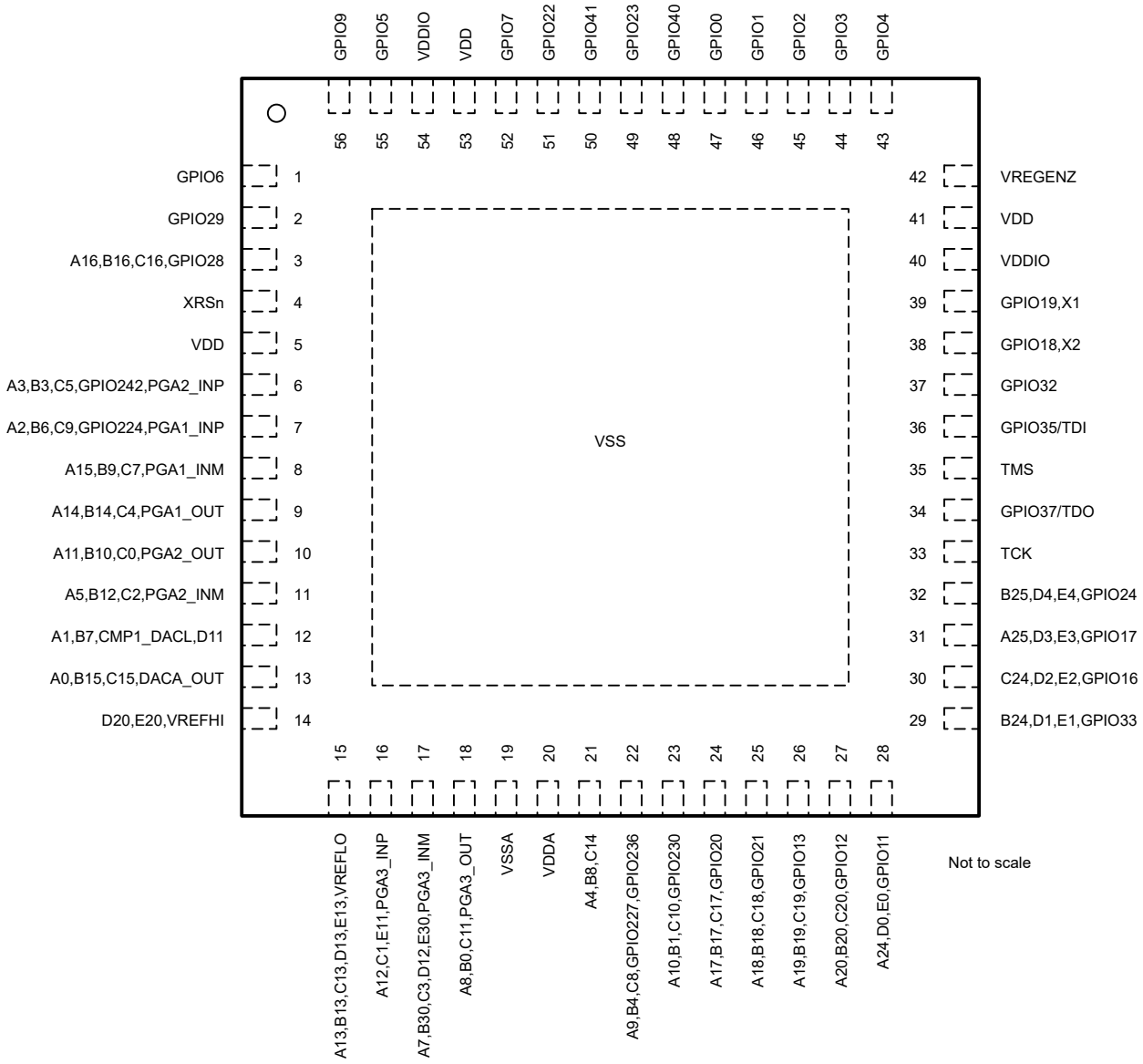

A. Only the GPIO function is shown on GPIO pins. See the *Pin Attributes* table for the complete, muxed signal name.

Figure 5-5. 56-Pin RSH Very Thin Quad Flatpack No-Lead (Top View)

Copyright © 2026 Texas Instruments Incorporated

5.2 Pin Attributes

Table 5-1. Pin Attributes

SIGNAL NAME	MUX POSITION	128 PDT	100 PZ	80 PNA	64 PM	56 RSH	PIN TYPE	DESCRIPTION
ANALOG								
A0							I	ADC-A Input 0
B15							I	ADC-B Input 15
C15							I	ADC-C Input 15
CMP3_HP2		30	23	19	15	13	I	CMPSS-3 High Comparator Positive Input 2
CMP3_LP2							I	CMPSS-3 Low Comparator Positive Input 2
DACA_OUT							O	Buffered DAC-A Output.
AIO231	0, 4, 8, 12						I	Analog Pin Used For Digital Input 231
A1							I	ADC-A Input 1
B7							I	ADC-B Input 7
CMP1_DACL							I	CMPSS-1 Low DAC Output
CMP1_HP4		29	22	18	14	12	I	CMPSS-1 High Comparator Positive Input 4
CMP1_LP4							I	CMPSS-1 Low Comparator Positive Input 4
D11							I	ADC-D Input 11
AIO232	0, 4, 8, 12						I	Analog Pin Used For Digital Input 232
A2							I	ADC-A Input 2
B6							I	ADC-B Input 6
C9							I	ADC-C Input 9
CMP1_HP0							I	CMPSS-1 High Comparator Positive Input 0
CMP1_LP0		21	17	13	9	7	I	CMPSS-1 Low Comparator Positive Input 0
GPIO224							I/O	General-Purpose Input Output 224 This pin also has digital mux functions which are described in the GPIO section of this table.
PGA1_INP							I	PGA-1 Plus
A3							I	ADC-A Input 3
CMP3_HP5			18				I	CMPSS-3 High Comparator Positive Input 5
CMP3_LP5							I	CMPSS-3 Low Comparator Positive Input 5
AIO229	0, 4, 8, 12						I	Analog Pin Used For Digital Input 229
A3							I	ADC-A Input 3
CMP3_HP5		20		12	8	6	I	CMPSS-3 High Comparator Positive Input 5
CMP3_LP5							I	CMPSS-3 Low Comparator Positive Input 5
A4							I	ADC-A Input 4
B8							I	ADC-B Input 8
CMP2_HP0		42	36	27	23	21	I	CMPSS-2 High Comparator Positive Input 0
CMP2_LP0							I	CMPSS-2 Low Comparator Positive Input 0
AIO225	0, 4, 8, 12						I	Analog Pin Used For Digital Input 225
A5							I	ADC-A Input 5
CMP2_HP5			35				I	CMPSS-2 High Comparator Positive Input 5
CMP2_LP5							I	CMPSS-2 Low Comparator Positive Input 5
AIO249	0, 4, 8, 12						I	Analog Pin Used For Digital Input 249
A5							I	ADC-A Input 5
CMP2_HP5		28		17	13	11	I	CMPSS-2 High Comparator Positive Input 5
CMP2_LP5							I	CMPSS-2 Low Comparator Positive Input 5

Copyright © 2026 Texas Instruments Incorporated

Table 5-1. Pin Attributes (continued)

SIGNAL NAME	MUX POSITION	128 PDT	100 PZ	80 PNA	64 PM	56 RSH	PIN TYPE	DESCRIPTION
A6							I	ADC-A Input 6
CMP1_HP2							I	CMPSS-1 High Comparator Positive Input 2
CMP1_LP2							I	CMPSS-1 Low Comparator Positive Input 2
D14		18	14	10	6		I	ADC-D Input 14
E14							I	ADC-E Input 14
GPIO228							I/O	General-Purpose Input Output 228 This pin also has digital mux functions which are described in the GPIO section of this table.
A7							I	ADC-A Input 7
B30							I	ADC-B Input 30
C3							I	ADC-C Input 3
CMP4_HN1							I	CMPSS-4 High Comparator Negative Input 1
CMP4_HP1							I	CMPSS-4 High Comparator Positive Input 1
CMP4_LN1		37	31	23	19	17	I	CMPSS-4 Low Comparator Negative Input 1
CMP4_LP1							I	CMPSS-4 Low Comparator Positive Input 1
D12							I	ADC-D Input 12
E30							I	ADC-E Input 30
AIO245	0, 4, 8, 12						I	Analog Pin Used For Digital Input 245
A8							I	ADC-A Input 8
CMP4_HP4			37				I	CMPSS-4 High Comparator Positive Input 4
CMP4_LP4							I	CMPSS-4 Low Comparator Positive Input 4
AIO240	0, 4, 8, 12						I	Analog Pin Used For Digital Input 240
A8							I	ADC-A Input 8
B0							I	ADC-B Input 0
C11		39		24	20	18	I	ADC-C Input 11
CMP4_HP4							I	CMPSS-4 High Comparator Positive Input 4
CMP4_LP4							I	CMPSS-4 Low Comparator Positive Input 4
AIO241	0, 4, 8, 12						I	Analog Pin Used For Digital Input 241
A9							I	ADC-A Input 9
CMP2_HP2							I	CMPSS-2 High Comparator Positive Input 2
CMP2_LP2		48	38	28	24	22	I	CMPSS-2 Low Comparator Positive Input 2
GPIO227							I/O	General-Purpose Input Output 227 This pin also has digital mux functions which are described in the GPIO section of this table.
A10							I	ADC-A Input 10
B1							I	ADC-B Input 1
C10							I	ADC-C Input 10
CMP2_HN0							I	CMPSS-2 High Comparator Negative Input 0
CMP2_HP3		50	40	29	25	23	I	CMPSS-2 High Comparator Positive Input 3
CMP2_LN0							I	CMPSS-2 Low Comparator Negative Input 0
CMP2_LP3							I	CMPSS-2 Low Comparator Positive Input 3
GPIO230							I/O	General-Purpose Input Output 230 This pin also has digital mux functions which are described in the GPIO section of this table.

Copyright © 2026 Texas Instruments Incorporated

Table 5-1. Pin Attributes (continued)

SIGNAL NAME	MUX POSITION	128 PDT	100 PZ	80 PNA	64 PM	56 RSH	PIN TYPE	DESCRIPTION
A11							I	ADC-A Input 11
B10							I	ADC-B Input 10
C0							I	ADC-C Input 0
CMP1_HN1							I	CMPSS-1 High Comparator Negative Input 1
CMP1_HP1		27	20	16	12	10	I	CMPSS-1 High Comparator Positive Input 1
CMP1_LN1							I	CMPSS-1 Low Comparator Negative Input 1
CMP1_LP1							I	CMPSS-1 Low Comparator Positive Input 1
PGA2_OUT							O	PGA-2 Output
AIO237	0, 4, 8, 12						I	Analog Pin Used For Digital Input 237
A12							I	ADC-A Input 12
CMP2_HN1							I	CMPSS-2 High Comparator Negative Input 1
CMP2_HP1		35	28	22	18	16	I	CMPSS-2 High Comparator Positive Input 1
CMP2_LN1							I	CMPSS-2 Low Comparator Negative Input 1
CMP2_LP1							I	CMPSS-2 Low Comparator Positive Input 1
AIO238	0, 4, 8, 12						I	Analog Pin Used For Digital Input 238
A13							I	ADC-A Input 13
B13							I	ADC-B Input 13
C13							I	ADC-C Input 13
D13							I	ADC-D Input 13
E13		34	26	21	17	15	I	ADC-E Input 13
VREFLO[1]							I	ADC Low Reference If all ADCs use the internal connection to VSSA to supply the low reference, then the ADC channels A13/B13/C13/D13/E13 can be sampled on the shared analog pin.
AIO235	0, 4, 8, 12						I	Analog Pin Used For Digital Input 235
A13							I	ADC-A Input 13
B13							I	ADC-B Input 13
C13							I	ADC-C Input 13
D13							I	ADC-D Input 13
E13		33, 34	26, 27	21	17	15	I	ADC-E Input 13
VREFLO[1]							I	ADC Low Reference If all ADCs use the internal connection to VSSA to supply the low reference, then the ADC channels A13/B13/C13/D13/E13 can be sampled on the shared analog pin.
AIO235	ALT						I	Analog Pin Used For Digital Input 235
A14							I	ADC-A Input 14
B14							I	ADC-B Input 14
C4							I	ADC-C Input 4
CMP3_HP4		26	19	15	11	9	I	CMPSS-3 High Comparator Positive Input 4
CMP3_LP4							I	CMPSS-3 Low Comparator Positive Input 4
PGA1_OUT							O	PGA-1 Output
AIO239	0, 4, 8, 12						I	Analog Pin Used For Digital Input 239
A15							I	ADC-A Input 15
CMP1_HN0							I	CMPSS-1 High Comparator Negative Input 0
CMP1_HP3		22		14	10	8	I	CMPSS-1 High Comparator Positive Input 3
CMP1_LN0							I	CMPSS-1 Low Comparator Negative Input 0
CMP1_LP3							I	CMPSS-1 Low Comparator Positive Input 3
AIO233	0, 4, 8, 12						I	Analog Pin Used For Digital Input 233

Copyright © 2026 Texas Instruments Incorporated

Table 5-1. Pin Attributes (continued)

SIGNAL NAME	MUX POSITION	128 PDT	100 PZ	80 PNA	64 PM	56 RSH	PIN TYPE	DESCRIPTION
A16							I	ADC-A Input 16
B16							I	ADC-B Input 16
C16		2	1	4	2	3	I	ADC-C Input 16
GPIO28							I/O	General-Purpose Input Output 28 This pin also has digital mux functions which are described in the GPIO section of this table.
A17							I	ADC-A Input 17
B17							I	ADC-B Input 17
C17		60	48	33	27	24	I	ADC-C Input 17
GPIO20							I/O	General-Purpose Input Output 20 This pin also has digital mux functions which are described in the GPIO section of this table.
A18							I	ADC-A Input 18
B18							I	ADC-B Input 18
C18		61	49	34	28	25	I	ADC-C Input 18
GPIO21							I/O	General-Purpose Input Output 21 This pin also has digital mux functions which are described in the GPIO section of this table.
A19							I	ADC-A Input 19
B19							I	ADC-B Input 19
C19		62	50	35	29	26	I	ADC-C Input 19
GPIO13							I/O	General-Purpose Input Output 13 This pin also has digital mux functions which are described in the GPIO section of this table.
A20							I	ADC-A Input 20
B20							I	ADC-B Input 20
C20		63	51	36	30	27	I	ADC-C Input 20
GPIO12							I/O	General-Purpose Input Output 12 This pin also has digital mux functions which are described in the GPIO section of this table.
A24							I	ADC-A Input 24
D0							I	ADC-D Input 0
E0		64	52	37	31	28	I	ADC-E Input 0
GPIO11							I/O	General-Purpose Input Output 11 This pin also has digital mux functions which are described in the GPIO section of this table.
A25							I	ADC-A Input 25
D3							I	ADC-D Input 3
E3		67	55	40	34	31	I	ADC-E Input 3
GPIO17							I/O	General-Purpose Input Output 17 This pin also has digital mux functions which are described in the GPIO section of this table.
A26							I	ADC-A Input 26
D6		24					I	ADC-D Input 6
E6							I	ADC-E Input 6
AIO209	0, 4, 8, 12						I	Analog Pin Used For Digital Input 209
A27							I	ADC-A Input 27
D9							I	ADC-D Input 9
E9		44					I	ADC-E Input 9
GPIO212							I/O	General-Purpose Input Output 212 This pin also has digital mux functions which are described in the GPIO section of this table.

Copyright © 2026 Texas Instruments Incorporated

Table 5-1. Pin Attributes (continued)

SIGNAL NAME	MUX POSITION	128 PDT	100 PZ	80 PNA	64 PM	56 RSH	PIN TYPE	DESCRIPTION
A28							I	ADC-A Input 28
D19							I	ADC-D Input 19
E19		47					I	ADC-E Input 19
GPIO215							I/O	General-Purpose Input Output 215 This pin also has digital mux functions which are described in the GPIO section of this table.
B0							I	ADC-B Input 0
C11							I	ADC-C Input 11
CMP2_HP3							I	CMPSS-2 High Comparator Positive Input 3
CMP2_LP3			41				I	CMPSS-2 Low Comparator Positive Input 3
GPIO253							I/O	General-Purpose Input Output 253 This pin also has digital mux functions which are described in the GPIO section of this table.
B2							I	ADC-B Input 2
C6							I	ADC-C Input 6
CMP3_HP0							I	CMPSS-3 High Comparator Positive Input 0
CMP3_LP0		19	15	11	7		I	CMPSS-3 Low Comparator Positive Input 0
E12							I	ADC-E Input 12
GPIO226							I/O	General-Purpose Input Output 226 This pin also has digital mux functions which are described in the GPIO section of this table.
B3							I	ADC-B Input 3
CMP3_HN0							I	CMPSS-3 High Comparator Negative Input 0
CMP3_HP3							I	CMPSS-3 High Comparator Positive Input 3
CMP3_LN0							I	CMPSS-3 Low Comparator Negative Input 0
CMP3_LP3		20	16	12	8	6	I	CMPSS-3 Low Comparator Positive Input 3
GPIO242							I/O	General-Purpose Input Output 242 This pin also has digital mux functions which are described in the GPIO section of this table.
PGA2_INP							I	PGA-2 Plus
B4							I	ADC-B Input 4
C8							I	ADC-C Input 8
CMP4_HP0							I	CMPSS-4 High Comparator Positive Input 0
CMP4_LP0		49	39	28	24	22	I	CMPSS-4 Low Comparator Positive Input 0
GPIO236	0, 4, 8, 12						I/O	General-Purpose Input Output 236 This pin also has digital mux functions which are described in the GPIO section of this table.
B5							I	ADC-B Input 5
CMP1_HP5							I	CMPSS-1 High Comparator Positive Input 5
CMP1_LP5							I	CMPSS-1 Low Comparator Positive Input 5
D15		38	32				I	ADC-D Input 15
E15							I	ADC-E Input 15
AIO252	0, 4, 8, 12						I	Analog Pin Used For Digital Input 252
B9							I	ADC-B Input 9
C7		22	18	14	10	8	I	ADC-C Input 7
PGA1_INM							I	PGA-1 Minus
B11							I	ADC-B Input 11
CMP4_HP5							I	CMPSS-4 High Comparator Positive Input 5
CMP4_LP5							I	CMPSS-4 Low Comparator Positive Input 5
D16		36	30				I	ADC-D Input 16
E16							I	ADC-E Input 16
AIO251	0, 4, 8, 12						I	Analog Pin Used For Digital Input 251

Copyright © 2026 Texas Instruments Incorporated

Table 5-1. Pin Attributes (continued)

SIGNAL NAME	MUX POSITION	128 PDT	100 PZ	80 PNA	64 PM	56 RSH	PIN TYPE	DESCRIPTION
B12							I	ADC-B Input 12
C2							I	ADC-C Input 2
CMP3_HN1							I	CMPSS-3 High Comparator Negative Input 1
CMP3_HP1		28	21	17	13	11	I	CMPSS-3 High Comparator Positive Input 1
CMP3_LN1							I	CMPSS-3 Low Comparator Negative Input 1
CMP3_LP1							I	CMPSS-3 Low Comparator Positive Input 1
PGA2_INM							I	PGA-2 Minus
AIO244	0, 4, 8, 12						I	Analog Pin Used For Digital Input 244
B24							I	ADC-B Input 24
D1							I	ADC-D Input 1
E1		65	53	38	32	29	I	ADC-E Input 1
GPIO33							I/O	General-Purpose Input Output 33 This pin also has digital mux functions which are described in the GPIO section of this table.
B25							I	ADC-B Input 25
D4							I	ADC-D Input 4
E4		68	56	41	35	32	I	ADC-E Input 4
GPIO24							I/O	General-Purpose Input Output 24 This pin also has digital mux functions which are described in the GPIO section of this table.
B26							I	ADC-B Input 26
D7		25					I	ADC-D Input 7
E7							I	ADC-E Input 7
AIO210	0, 4, 8, 12						I	Analog Pin Used For Digital Input 210
B27							I	ADC-B Input 27
D10							I	ADC-D Input 10
E10		45					I	ADC-E Input 10
GPIO213							I/O	General-Purpose Input Output 213 This pin also has digital mux functions which are described in the GPIO section of this table.
C1							I	ADC-C Input 1
CMP4_HP2							I	CMPSS-4 High Comparator Positive Input 2
CMP4_LP2		35	29	22	18	16	I	CMPSS-4 Low Comparator Positive Input 2
E11							I	ADC-E Input 11
PGA3_INP							I	PGA-3 Plus
AIO248	0, 4, 8, 12						I	Analog Pin Used For Digital Input 248
C5		20	28	12	8	6	I	ADC-C Input 5
C14							I	ADC-C Input 14
CMP4_HN0							I	CMPSS-4 High Comparator Negative Input 0
CMP4_HP3							I	CMPSS-4 High Comparator Positive Input 3
CMP4_LN0			42				I	CMPSS-4 Low Comparator Negative Input 0
CMP4_LP3							I	CMPSS-4 Low Comparator Positive Input 3
GPIO247							I/O	General-Purpose Input Output 247 This pin also has digital mux functions which are described in the GPIO section of this table.
C14							I	ADC-C Input 14
CMP4_HN0							I	CMPSS-4 High Comparator Negative Input 0
CMP4_HP3		42		27	23	21	I	CMPSS-4 High Comparator Positive Input 3
CMP4_LN0							I	CMPSS-4 Low Comparator Negative Input 0
CMP4_LP3							I	CMPSS-4 Low Comparator Positive Input 3

Copyright © 2026 Texas Instruments Incorporated

Table 5-1. Pin Attributes (continued)

SIGNAL NAME	MUX POSITION	128 PDT	100 PZ	80 PNA	64 PM	56 RSH	PIN TYPE	DESCRIPTION
C24							I	ADC-C Input 24
D2							I	ADC-D Input 2
E2		66	54	39	33	30	I	ADC-E Input 2
GPIO16							I/O	General-Purpose Input Output 16 This pin also has digital mux functions which are described in the GPIO section of this table.
C25							I	ADC-C Input 25
D5		23					I	ADC-D Input 5
E5							I	ADC-E Input 5
AIO208	0, 4, 8, 12						I	Analog Pin Used For Digital Input 208
C26							I	ADC-C Input 26
D8							I	ADC-D Input 8
E8		43					I	ADC-E Input 8
GPIO211							I/O	General-Purpose Input Output 211 This pin also has digital mux functions which are described in the GPIO section of this table.
C27							I	ADC-C Input 27
D18							I	ADC-D Input 18
E18		46					I	ADC-E Input 18
GPIO214							I/O	General-Purpose Input Output 214 This pin also has digital mux functions which are described in the GPIO section of this table.
D20							I	ADC-D Input 20
E20							I	ADC-E Input 20
VREFHI[(2)]		31	24	20	16	14	I	ADC High Reference. This can be sourced from either the internal voltage reference or from an external voltage reference. In either case a 2.2-µF capacitor between VREFHI and VREFLO must be placed on this pin. This capacitor should be placed as close to the device as possible. If all ADCs use the internal connection to VDDA to supply the high reference, then the ADC channels D20 and E20 can be sampled on the shared analog pin and the capacitor is not needed.
AIO234	0, 4, 8, 12						I	Analog Pin Used For Digital Input 234
D20							I	ADC-D Input 20
E20							I	ADC-E Input 20
VREFHI[(2)]		32	25	20	16	14	I	ADC High Reference. This can be sourced from either the internal voltage reference or from an external voltage reference. In either case a 2.2-µF capacitor between VREFHI and VREFLO must be placed on this pin. This capacitor should be placed as close to the device as possible. If all ADCs use the internal connection to VDDA to supply the high reference, then the ADC channels D20 and E20 can be sampled on the shared analog pin and the capacitor is not needed.
AIO234	ALT						I	Analog Pin Used For Digital Input 234
PGA3_INM		36	30	23	19	17	I	PGA-3 Minus
PGA3_OUT		38	32	24	20	18	O	PGA-3 Output
GPIO								
GPIO236	0, 4, 8, 12						I/O	General-Purpose Input Output 236 This pin also has analog functions which are described in the ANALOG section of this table.
EPWM7_A	1	49	39	28	24	22	O	ePWM-7 Output A
EQEP1_INDEX	5						I/O	eQEP-1 Index
EPWM12_A	9						O	ePWM-12 Output A

Copyright © 2026 Texas Instruments Incorporated

Table 5-1. Pin Attributes (continued)

SIGNAL NAME	MUX POSITION	128 PDT	100 PZ	80 PNA	64 PM	56 RSH	PIN TYPE	DESCRIPTION
GPIO0	0, 4, 8, 12	100	79	63	52	47	I/O	General-Purpose Input Output 0
EPWM1_A	1						O	ePWM-1 Output A
OUTPUTXBAR7	3						O	Output X-BAR Output 7
SCIA_RX	5						I	SCI-A Receive Data
I2CA_SDA	6						I/OD	I2C-A Open-Drain Bidirectional Data
SPIA_PTE	7						I/O	SPI-A Peripheral Transmit Enable (PTE)
FSIRXA_CLK	9						I	FSIRX-A Input Clock
MCANA_RX	10						I	CAN/CAN FD Receive
CLB_OUTPUTXBAR8	11						O	CLB Output X-BAR Output 8
EQEP1_INDEX	13						I/O	eQEP-1 Index
EPWM3_A	15						O	ePWM-3 Output A
GPIO1	0, 4, 8, 12	99	78	62	51	46	I/O	General-Purpose Input Output 1
EPWM1_B	1						O	ePWM-1 Output B
SCIA_TX	5						O	SCI-A Transmit Data
I2CA_SCL	6						I/OD	I2C-A Open-Drain Bidirectional Clock
SPIA_POCI	7						I/O	SPI-A Peripheral Out, Controller In (POCI)
EQEP1_STROBE	9						I/O	eQEP-1 Strobe
MCANA_TX	10						O	CAN/CAN FD Transmit
CLB_OUTPUTXBAR7	11						O	CLB Output X-BAR Output 7
EPWM10_B	13						O	ePWM-10 Output B
EPWM3_B	15						O	ePWM-3 Output B
GPIO2	0, 4, 8, 12	98	77	61	50	45	I/O	General-Purpose Input Output 2
EPWM2_A	1						O	ePWM-2 Output A
OUTPUTXBAR1	5						O	Output X-BAR Output 1
PMBUSA_SDA	6						I/OD	PMBus-A Open-Drain Bidirectional Data
SPIA_PICO	7						I/O	SPI-A Peripheral In, Controller Out (PICO)
SCIA_TX	9						O	SCI-A Transmit Data
FSIRXA_D1	10						I	FSIRX-A Optional Additional Data Input
I2CB_SDA	11						I/OD	I2C-B Open-Drain Bidirectional Data
EPWM10_A	13						O	ePWM-10 Output A
MCANB_TX	14						O	CAN/CAN FD Transmit
EPWM4_A	15						O	ePWM-4 Output A
GPIO3	0, 4, 8, 12	97	76	60	49	44	I/O	General-Purpose Input Output 3
EPWM2_B	1						O	ePWM-2 Output B
OUTPUTXBAR2	2, 5						O	Output X-BAR Output 2
PMBUSA_SCL	6						I/OD	PMBus-A Open-Drain Bidirectional Clock
SPIA_CLK	7						I/O	SPI-A Clock
SCIA_RX	9						I	SCI-A Receive Data
FSIRXA_D0	10						I	FSIRX-A Primary Data Input
I2CB_SCL	11						I/OD	I2C-B Open-Drain Bidirectional Clock
MCANB_RX	14						I	CAN/CAN FD Receive
EPWM4_B	15						O	ePWM-4 Output B

Copyright © 2026 Texas Instruments Incorporated

Table 5-1. Pin Attributes (continued)

SIGNAL NAME	MUX POSITION	128 PDT	100 PZ	80 PNA	64 PM	56 RSH	PIN TYPE	DESCRIPTION
GPIO4	0, 4, 8, 12	96	75	59	48	43	I/O	General-Purpose Input Output 4
EPWM3_A	1						O	ePWM-3 Output A
I2CA_SCL	2						I/OD	I2C-A Open-Drain Bidirectional Clock
MCANA_TX	3						O	CAN/CAN FD Transmit
OUTPUTXBAR3	5						O	Output X-BAR Output 3
SPIB_CLK	7						I/O	SPI-B Clock
EQEP2_STROBE	9						I/O	eQEP-2 Strobe
FSIRXA_CLK	10						I	FSIRX-A Input Clock
CLB_OUTPUTXBAR6	11						O	CLB Output X-BAR Output 6
EPWM11_B	13						O	ePWM-11 Output B
SPIA_POCI	14						I/O	SPI-A Peripheral Out, Controller In (POCI)
EPWM1_A	15						O	ePWM-1 Output A
GPIO5	0, 4, 8, 12	118	89	74	61	55	I/O	General-Purpose Input Output 5
EPWM3_B	1						O	ePWM-3 Output B
I2CA_SDA	2						I/OD	I2C-A Open-Drain Bidirectional Data
OUTPUTXBAR3	3						O	Output X-BAR Output 3
MCANA_RX	5						I	CAN/CAN FD Receive
SPIA_PTE	7						I/O	SPI-A Peripheral Transmit Enable (PTE)
FSITXA_D1	9						O	FSITX-A Optional Additional Data Output
CLB_OUTPUTXBAR5	10						O	CLB Output X-BAR Output 5
SCIA_RX	11						I	SCI-A Receive Data
EPWM1_B	15						O	ePWM-1 Output B
GPIO6	0, 4, 8, 12	126	97	80	64	1	I/O	General-Purpose Input Output 6
EPWM4_A	1						O	ePWM-4 Output A
OUTPUTXBAR4	2						O	Output X-BAR Output 4
SYNCOUT	3						O	External ePWM Synchronization Pulse
EQEP1_A	5						I	eQEP-1 Input A
SPIB_POCI	7						I/O	SPI-B Peripheral Out, Controller In (POCI)
FSITXA_D0	9						O	FSITX-A Primary Data Output
FSITXA_D1	11						O	FSITX-A Optional Additional Data Output
CLB_OUTPUTXBAR8	14						O	CLB Output X-BAR Output 8
EPWM2_A	15						O	ePWM-2 Output A
GPIO7	0, 4, 8, 12	105	84	68	57	52	I/O	General-Purpose Input Output 7
EPWM4_B	1						O	ePWM-4 Output B
EPWM2_A	2						O	ePWM-2 Output A
OUTPUTXBAR5	3						O	Output X-BAR Output 5
EQEP1_B	5						I	eQEP-1 Input B
SPIB_PICO	7						I/O	SPI-B Peripheral In, Controller Out (PICO)
FSITXA_CLK	9						O	FSITX-A Output Clock
CLB_OUTPUTXBAR2	10						O	CLB Output X-BAR Output 2
SCIA_TX	11						O	SCI-A Transmit Data
MCANA_TX	14						O	CAN/CAN FD Transmit
EPWM2_B	15						O	ePWM-2 Output B

Copyright © 2026 Texas Instruments Incorporated

Table 5-1. Pin Attributes (continued)

SIGNAL NAME	MUX POSITION	128 PDT	100 PZ	80 PNA	64 PM	56 RSH	PIN TYPE	DESCRIPTION
GPIO8	0, 4, 8, 12	95	74	58	47		I/O	General-Purpose Input Output 8
EPWM5_A	1						O	ePWM-5 Output A
ADCSOCAO	3						O	ADC Start of Conversion A for External ADC
EQEP1_STROBE	5						I/O	eQEP-1 Strobe
SCIA_TX	6						O	SCI-A Transmit Data
SPIA_PICO	7						I/O	SPI-A Peripheral In, Controller Out (PICO)
I2CA_SCL	9						I/OD	I2C-A Open-Drain Bidirectional Clock
FSITXA_D1	10						O	FSITX-A Optional Additional Data Output
CLB_OUTPUTXBAR5	11						O	CLB Output X-BAR Output 5
EPWM11_A	13						O	ePWM-11 Output A
GPIO9	0, 4, 8, 12	119	90	75	62	56	I/O	General-Purpose Input Output 9
EPWM5_B	1						O	ePWM-5 Output B
SCIB_TX	2						O	SCI-B Transmit Data
OUTPUTXBAR6	3						O	Output X-BAR Output 6
EQEP1_INDEX	5						I/O	eQEP-1 Index
SCIA_RX	6						I	SCI-A Receive Data
SPIA_CLK	7						I/O	SPI-A Clock
I2CA_SCL	9						I/OD	I2C-A Open-Drain Bidirectional Clock
FSITXA_D0	10						O	FSITX-A Primary Data Output
LINA_RX	11						I	LIN-A Receive
PMBUSA_SCL	13						I/OD	PMBus-A Open-Drain Bidirectional Clock
I2CB_SCL	14						I/OD	I2C-B Open-Drain Bidirectional Clock
EQEP3_B	15						I	eQEP-3 Input B
GPIO10	0, 4, 8, 12	122	93	76	63		I/O	General-Purpose Input Output 10
EPWM6_A	1						O	ePWM-6 Output A
ADCSOCBO	3						O	ADC Start of Conversion B for External ADC
EQEP1_A	5						I	eQEP-1 Input A
SCIB_TX	6						O	SCI-B Transmit Data
SPIA_POCI	7						I/O	SPI-A Peripheral Out, Controller In (POCI)
I2CA_SDA	9						I/OD	I2C-A Open-Drain Bidirectional Data
FSITXA_CLK	10						O	FSITX-A Output Clock
LINA_TX	11						O	LIN-A Transmit
EQEP3_STROBE	13						I/O	eQEP-3 Strobe
CLB_OUTPUTXBAR4	15						O	CLB Output X-BAR Output 4
GPIO11	0, 4, 8, 12	64	52	37	31	28	I/O	General-Purpose Input Output 11 This pin also has analog functions which are described in the ANALOG section of this table.
EPWM6_B	1						O	ePWM-6 Output B
MCANA_RX	2						I	CAN/CAN FD Receive
OUTPUTXBAR7	3						O	Output X-BAR Output 7
EQEP1_B	5						I	eQEP-1 Input B
SCIB_RX	6						I	SCI-B Receive Data
SPIA_PTE	7						I/O	SPI-A Peripheral Transmit Enable (PTE)
FSIRXA_D1	9						I	FSIRX-A Optional Additional Data Input
LINA_RX	10						I	LIN-A Receive
EQEP2_A	11						I	eQEP-2 Input A
SPIA_PICO	13						I/O	SPI-A Peripheral In, Controller Out (PICO)
EQEP3_INDEX	15						I/O	eQEP-3 Index

Copyright © 2026 Texas Instruments Incorporated

Table 5-1. Pin Attributes (continued)

SIGNAL NAME	MUX POSITION	128 PDT	100 PZ	80 PNA	64 PM	56 RSH	PIN TYPE	DESCRIPTION
GPIO12	0, 4, 8, 12	63	51	36	30	27	I/O	General-Purpose Input Output 12 This pin also has analog functions which are described in the ANALOG section of this table.
EPWM7_A	1						O	ePWM-7 Output A
MCANA_RX	3						I	CAN/CAN FD Receive
EQEP1_STROBE	5						I/O	eQEP-1 Strobe
SCIB_TX	6						O	SCI-B Transmit Data
PMBUSA_CTL	7						I/O	PMBus-A Control Signal - Target Input/Controller Output
FSIRXA_D0	9						I	FSIRX-A Primary Data Input
LINA_TX	10						O	LIN-A Transmit
SPIA_CLK	11						I/O	SPI-A Clock
GPIO13	0, 4, 8, 12	62	50	35	29	26	I/O	General-Purpose Input Output 13 This pin also has analog functions which are described in the ANALOG section of this table.
EPWM7_B	1						O	ePWM-7 Output B
MCANA_TX	3						O	CAN/CAN FD Transmit
EQEP1_INDEX	5						I/O	eQEP-1 Index
SCIB_RX	6						I	SCI-B Receive Data
PMBUSA_ALERT	7						I/OD	PMBus-A Open-Drain Bidirectional Alert Signal
FSIRXA_CLK	9						I	FSIRX-A Input Clock
LINA_RX	10						I	LIN-A Receive
SPIA_POCI	11						I/O	SPI-A Peripheral Out, Controller In (POCI)
GPIO14	0, 4, 8, 12	125	96	79			I/O	General-Purpose Input Output 14
EPWM8_A	1						O	ePWM-8 Output A
SCIB_TX	2						O	SCI-B Transmit Data
I2CB_SDA	5						I/OD	I2C-B Open-Drain Bidirectional Data
OUTPUTXBAR3	6						O	Output X-BAR Output 3
PMBUSA_SDA	7						I/OD	PMBus-A Open-Drain Bidirectional Data
SPIB_CLK	9						I/O	SPI-B Clock
EQEP2_A	10						I	eQEP-2 Input A
LINA_TX	11						O	LIN-A Transmit
EPWM3_A	13						O	ePWM-3 Output A
CLB_OUTPUTXBAR7	14						O	CLB Output X-BAR Output 7
GPIO15	0, 4, 8, 12	124	95	78			I/O	General-Purpose Input Output 15
EPWM8_B	1						O	ePWM-8 Output B
SCIB_RX	2						I	SCI-B Receive Data
I2CB_SCL	5						I/OD	I2C-B Open-Drain Bidirectional Clock
OUTPUTXBAR4	6						O	Output X-BAR Output 4
PMBUSA_SCL	7						I/OD	PMBus-A Open-Drain Bidirectional Clock
SPIB_PTE	9						I/O	SPI-B Peripheral Transmit Enable (PTE)
EQEP2_B	10						I	eQEP-2 Input B
LINA_RX	11						I	LIN-A Receive
EPWM3_B	13						O	ePWM-3 Output B
CLB_OUTPUTXBAR6	14						O	CLB Output X-BAR Output 6

Copyright © 2026 Texas Instruments Incorporated

Table 5-1. Pin Attributes (continued)

SIGNAL NAME	MUX POSITION	128 PDT	100 PZ	80 PNA	64 PM	56 RSH	PIN TYPE	DESCRIPTION
GPIO16	0, 4, 8, 12						I/O	General-Purpose Input Output 16 This pin also has analog functions which are described in the ANALOG section of this table.
SPIA_PICO	1						I/O	SPI-A Peripheral In, Controller Out (PICO)
OUTPUTXBAR7	3						O	Output X-BAR Output 7
EPWM9_A	5						O	ePWM-9 Output A
SCIA_TX	6						O	SCI-A Transmit Data
EQEP1_STROBE	9	66	54	39	33	30	I/O	eQEP-1 Strobe
PMBUSA_SCL	10						I/OD	PMBus-A Open-Drain Bidirectional Clock
XCLKOUT	11						O	External Clock Output. This pin outputs a divided-down version of a chosen clock signal from within the device.
EQEP2_B	13						I	eQEP-2 Input B
SPIB_POCI	14						I/O	SPI-B Peripheral Out, Controller In (POCI)
EQEP3_STROBE	15						I/O	eQEP-3 Strobe
GPIO17	0, 4, 8, 12						I/O	General-Purpose Input Output 17 This pin also has analog functions which are described in the ANALOG section of this table.
SPIA_POCI	1						I/O	SPI-A Peripheral Out, Controller In (POCI)
OUTPUTXBAR8	3						O	Output X-BAR Output 8
EPWM9_B	5	67	55	40	34	31	O	ePWM-9 Output B
SCIA_RX	6						I	SCI-A Receive Data
EQEP1_INDEX	9						I/O	eQEP-1 Index
PMBUSA_SDA	10						I/OD	PMBus-A Open-Drain Bidirectional Data
MCANA_TX	11						O	CAN/CAN FD Transmit
EPWM6_A	14						O	ePWM-6 Output A
GPIO18	0, 4, 8, 12						I/O	General-Purpose Input Output 18
SPIA_CLK	1						I/O	SPI-A Clock
SCIB_TX	2						O	SCI-B Transmit Data
MCANB_RX	3						I	CAN/CAN FD Receive
EPWM6_A	5						O	ePWM-6 Output A
I2CA_SCL	6						I/OD	I2C-A Open-Drain Bidirectional Clock
EQEP2_A	9	87	68	50	41	38	I	eQEP-2 Input A
PMBUSA_CTL	10						I/O	PMBus-A Control Signal - Target Input/Controller Output
XCLKOUT	11						O	External Clock Output. This pin outputs a divided-down version of a chosen clock signal from within the device.
LINA_TX	13						O	LIN-A Transmit
EQEP3_INDEX	15						I/O	eQEP-3 Index
X2	ALT						I/O	Crystal oscillator output.

Copyright © 2026 Texas Instruments Incorporated

Table 5-1. Pin Attributes (continued)

SIGNAL NAME	MUX POSITION	128 PDT	100 PZ	80 PNA	64 PM	56 RSH	PIN TYPE	DESCRIPTION
GPIO19	0, 4, 8, 12	88	69	51	42	39	I/O	General-Purpose Input Output 19
SPIA_PTE	1						I/O	SPI-A Peripheral Transmit Enable (PTE)
SCIB_RX	2						I	SCI-B Receive Data
MCANB_TX	3						O	CAN/CAN FD Transmit
EPWM6_B	5						O	ePWM-6 Output B
I2CA_SDA	6						I/OD	I2C-A Open-Drain Bidirectional Data
EQEP2_B	9						I	eQEP-2 Input B
PMBUSA_ALERT	10						I/OD	PMBus-A Open-Drain Bidirectional Alert Signal
CLB_OUTPUTXBAR1	11						O	CLB Output X-BAR Output 1
LINA_RX	13						I	LIN-A Receive
X1	ALT						I/O	Crystal oscillator input or single-ended clock input. The device initialization software must configure this pin before the crystal oscillator is enabled. To use this oscillator, a quartz crystal circuit must be connected to X1 and X2. This pin can also be used to feed a single-ended 3.3-V level clock.
GPIO20	0, 4, 8, 12	60	48	33	27	24	I/O	General-Purpose Input Output 20 This pin also has analog functions which are described in the ANALOG section of this table.
EQEP1_A	1						I	eQEP-1 Input A
EPWM12_A	5						O	ePWM-12 Output A
SPIB_PICO	6						I/O	SPI-B Peripheral In, Controller Out (PICO)
MCANA_TX	9						O	CAN/CAN FD Transmit
ADCE_EXTMUXSEL0	10						O	ADCE external mux selection pin for position 0
I2CA_SCL	11						I/OD	I2C-A Open-Drain Bidirectional Clock
SCIC_TX	15						O	SCI-C Transmit Data
GPIO21	0, 4, 8, 12	61	49	34	28	25	I/O	General-Purpose Input Output 21 This pin also has analog functions which are described in the ANALOG section of this table.
EQEP1_B	1						I	eQEP-1 Input B
EPWM12_B	5						O	ePWM-12 Output B
SPIB_POCI	6						I/O	SPI-B Peripheral Out, Controller In (POCI)
MCANA_RX	9						I	CAN/CAN FD Receive
ADCE_EXTMUXSEL1	10						O	ADCE external mux selection pin for position 1
I2CA_SDA	11						I/OD	I2C-A Open-Drain Bidirectional Data
SCIC_RX	15						I	SCI-C Receive Data
GPIO22	0, 4, 8, 12	104	83	67	56	51	I/O	General-Purpose Input Output 22
EQEP1_STROBE	1						I/O	eQEP-1 Strobe
SCIB_TX	3						O	SCI-B Transmit Data
SPIB_CLK	6						I/O	SPI-B Clock
LINA_TX	9, 11						O	LIN-A Transmit
CLB_OUTPUTXBAR1	10						O	CLB Output X-BAR Output 1
EPWM4_A	14						O	ePWM-4 Output A
EQEP3_A	15						I	eQEP-3 Input A
GPIO23	0, 4, 8, 12	102	81	65	54	49	I/O	General-Purpose Input Output 23
EQEP1_INDEX	1						I/O	eQEP-1 Index
SCIB_RX	3						I	SCI-B Receive Data
SPIB_PTE	6						I/O	SPI-B Peripheral Transmit Enable (PTE)
LINA_RX	9, 11						I	LIN-A Receive
CLB_OUTPUTXBAR3	10						O	CLB Output X-BAR Output 3
EPWM12_A	13						O	ePWM-12 Output A
EPWM4_B	14						O	ePWM-4 Output B
USB0DM	ALT						O	USB-0 PHY differential data

Copyright © 2026 Texas Instruments Incorporated

Table 5-1. Pin Attributes (continued)

SIGNAL NAME	MUX POSITION	128 PDT	100 PZ	80 PNA	64 PM	56 RSH	PIN TYPE	DESCRIPTION
GPIO24	0, 4, 8, 12	68	56	41	35	32	I/O	General-Purpose Input Output 24 This pin also has analog functions which are described in the ANALOG section of this table.
OUTPUTXBAR1	1						O	Output X-BAR Output 1
EQEP2_A	2						I	eQEP-2 Input A
SPIA_PTE	3						I/O	SPI-A Peripheral Transmit Enable (PTE)
EPWM8_A	5						O	ePWM-8 Output A
SPIB_PICO	6						I/O	SPI-B Peripheral In, Controller Out (PICO)
LINA_TX	9						O	LIN-A Transmit
PMBUSA_SCL	10						I/OD	PMBus-A Open-Drain Bidirectional Clock
SCIA_TX	11						O	SCI-A Transmit Data
ERRORSTS	13						O	Error Status Output. This signal requires an external pulldown.
EPWM9_A	14						O	ePWM-9 Output A
GPIO25	0, 4, 8, 12	69	57	42			I/O	General-Purpose Input Output 25
OUTPUTXBAR2	1						O	Output X-BAR Output 2
EQEP2_B	2						I	eQEP-2 Input B
EQEP1_A	5						I	eQEP-1 Input A
SPIB_POCI	6						I/O	SPI-B Peripheral Out, Controller In (POCI)
FSITXA_D1	9						O	FSITX-A Optional Additional Data Output
PMBUSA_SDA	10						I/OD	PMBus-A Open-Drain Bidirectional Data
SCIA_RX	11						I	SCI-A Receive Data
EQEP3_A	13						I	eQEP-3 Input A
GPIO26	0, 4, 8, 12	70	58	43			I/O	General-Purpose Input Output 26
OUTPUTXBAR3	1, 5						O	Output X-BAR Output 3
EQEP2_INDEX	2						I/O	eQEP-2 Index
SPIB_CLK	6						I/O	SPI-B Clock
FSITXA_D0	9						O	FSITX-A Primary Data Output
PMBUSA_CTL	10						I/O	PMBus-A Control Signal - Target Input/Controller Output
I2CA_SDA	11						I/OD	I2C-A Open-Drain Bidirectional Data
EQEP3_B	13						I	eQEP-3 Input B
GPIO27	0, 4, 8, 12	71	59	44			I/O	General-Purpose Input Output 27
OUTPUTXBAR4	1, 5						O	Output X-BAR Output 4
EQEP2_STROBE	2						I/O	eQEP-2 Strobe
SPIB_PTE	6						I/O	SPI-B Peripheral Transmit Enable (PTE)
FSITXA_CLK	9						O	FSITX-A Output Clock
PMBUSA_ALERT	10						I/OD	PMBus-A Open-Drain Bidirectional Alert Signal
I2CA_SCL	11						I/OD	I2C-A Open-Drain Bidirectional Clock
EQEP3_STROBE	13						I/O	eQEP-3 Strobe

Copyright © 2026 Texas Instruments Incorporated

Table 5-1. Pin Attributes (continued)

SIGNAL NAME	MUX POSITION	128 PDT	100 PZ	80 PNA	64 PM	56 RSH	PIN TYPE	DESCRIPTION
GPIO28	0, 4, 8, 12						I/O	General-Purpose Input Output 28 This pin also has analog functions which are described in the ANALOG section of this table.
SCIA_RX	1						I	SCI-A Receive Data
EPWM7_A	3						O	ePWM-7 Output A
OUTPUTXBAR5	5						O	Output X-BAR Output 5
EQEP1_A	6	2	1	4	2	3	I	eQEP-1 Input A
EQEP2_STROBE	9						I/O	eQEP-2 Strobe
LINA_TX	10						O	LIN-A Transmit
SPIB_CLK	11						I/O	SPI-B Clock
ERRORSTS	13						O	Error Status Output. This signal requires an external pulldown.
I2CB_SDA	14						I/OD	I2C-B Open-Drain Bidirectional Data
GPIO29	0, 4, 8, 12						I/O	General-Purpose Input Output 29
SCIA_TX	1						O	SCI-A Transmit Data
EPWM7_B	3						O	ePWM-7 Output B
OUTPUTXBAR6	5						O	Output X-BAR Output 6
EQEP1_B	6						I	eQEP-1 Input B
EQEP2_INDEX	9	1	100	3	1	2	I/O	eQEP-2 Index
LINA_RX	10						I	LIN-A Receive
SPIB_PTE	11						I/O	SPI-B Peripheral Transmit Enable (PTE)
ERRORSTS	13						O	Error Status Output. This signal requires an external pulldown.
I2CB_SCL	14						I/OD	I2C-B Open-Drain Bidirectional Clock
AUXCLKIN	ALT						I	Auxiliary Clock Input
GPIO30	0, 4, 8, 12						I/O	General-Purpose Input Output 30
SPIB_PICO	3						I/O	SPI-B Peripheral In, Controller Out (PICO)
OUTPUTXBAR7	5						O	Output X-BAR Output 7
EQEP1_STROBE	6	127	98	1			I/O	eQEP-1 Strobe
FSIRXA_CLK	9						I	FSIRX-A Input Clock
MCANA_RX	10						I	CAN/CAN FD Receive
EPWM1_A	11						O	ePWM-1 Output A
EQEP3_INDEX	13						I/O	eQEP-3 Index
GPIO31	0, 4, 8, 12						I/O	General-Purpose Input Output 31
SPIB_POCI	3						I/O	SPI-B Peripheral Out, Controller In (POCI)
OUTPUTXBAR8	5						O	Output X-BAR Output 8
EQEP1_INDEX	6	128	99	2			I/O	eQEP-1 Index
FSIRXA_D1	9						I	FSIRX-A Optional Additional Data Input
MCANA_TX	10						O	CAN/CAN FD Transmit
EPWM1_B	11						O	ePWM-1 Output B
GPIO32	0, 4, 8, 12						I/O	General-Purpose Input Output 32
I2CA_SDA	1						I/OD	I2C-A Open-Drain Bidirectional Data
EQEP1_INDEX	2						I/O	eQEP-1 Index
SPIB_CLK	3						I/O	SPI-B Clock
EPWM8_B	5	79	64	49	40	37	O	ePWM-8 Output B
LINA_TX	6						O	LIN-A Transmit
FSIRXA_D0	9						I	FSIRX-A Primary Data Input
MCANB_TX	10						O	CAN/CAN FD Transmit
PMBUSA_SDA	11						I/OD	PMBus-A Open-Drain Bidirectional Data
ADCSOCBO	13						O	ADC Start of Conversion B for External ADC

Copyright © 2026 Texas Instruments Incorporated

Table 5-1. Pin Attributes (continued)

SIGNAL NAME	MUX POSITION	128 PDT	100 PZ	80 PNA	64 PM	56 RSH	PIN TYPE	DESCRIPTION
GPIO33	0, 4, 8, 12	65	53	38	32	29	I/O	General-Purpose Input Output 33 This pin also has analog functions which are described in the ANALOG section of this table.
I2CA_SCL	1						I/OD	I2C-A Open-Drain Bidirectional Clock
SPIB_PTE	3						I/O	SPI-B Peripheral Transmit Enable (PTE)
OUTPUTXBAR4	5						O	Output X-BAR Output 4
LINA_RX	6						I	LIN-A Receive
FSIRXA_CLK	9						I	FSIRX-A Input Clock
MCANB_RX	10						I	CAN/CAN FD Receive
EQEP2_B	11						I	eQEP-2 Input B
ADCSOCAO	13						O	ADC Start of Conversion A for External ADC
SCIC_RX	15						I	SCI-C Receive Data
GPIO34	0, 4, 8, 12	123	94	77			I/O	General-Purpose Input Output 34
OUTPUTXBAR1	1						O	Output X-BAR Output 1
PMBUSA_SDA	6						I/OD	PMBus-A Open-Drain Bidirectional Data
I2CB_SDA	14						I/OD	I2C-B Open-Drain Bidirectional Data
GPIO35	0, 4, 8, 12	78	63	48	39	36	I/O	General-Purpose Input Output 35
SCIA_RX	1						I	SCI-A Receive Data
SPIA_POCI	2						I/O	SPI-A Peripheral Out, Controller In (POCI)
I2CA_SDA	3						I/OD	I2C-A Open-Drain Bidirectional Data
MCANB_RX	5						I	CAN/CAN FD Receive
PMBUSA_SCL	6						I/OD	PMBus-A Open-Drain Bidirectional Clock
LINA_RX	7						I	LIN-A Receive
EQEP1_A	9						I	eQEP-1 Input A
PMBUSA_CTL	10						I/O	PMBus-A Control Signal - Target Input/Controller Output
EPWM5_B	11						O	ePWM-5 Output B
TDI	15						I	JTAG Test Data Input (TDI) - TDI is the default mux selection for the pin. The internal pullup is disabled by default. The internal pullup should be enabled or an external pullup added on the board if this pin is used as JTAG TDI to avoid a floating input.
GPIO37	0, 4, 8, 12	76	61	46	37	34	I/O	General-Purpose Input Output 37
OUTPUTXBAR2	1						O	Output X-BAR Output 2
SPIA_PTE	2						I/O	SPI-A Peripheral Transmit Enable (PTE)
I2CA_SCL	3						I/OD	I2C-A Open-Drain Bidirectional Clock
SCIA_TX	5						O	SCI-A Transmit Data
MCANB_TX	6						O	CAN/CAN FD Transmit
LINA_TX	7						O	LIN-A Transmit
EQEP1_B	9						I	eQEP-1 Input B
PMBUSA_ALERT	10						I/OD	PMBus-A Open-Drain Bidirectional Alert Signal
EPWM5_A	11						O	ePWM-5 Output A
TDO	15						O	JTAG Test Data Output (TDO) - TDO is the default mux selection for the pin. The internal pullup is disabled by default. The TDO function will be in a tri-state condition when there is no JTAG activity, leaving this pin floating; the internal pullup should be enabled or an external pullup added on the board to avoid a floating GPIO input.

Copyright © 2026 Texas Instruments Incorporated

Table 5-1. Pin Attributes (continued)

SIGNAL NAME	MUX POSITION	128 PDT	100 PZ	80 PNA	64 PM	56 RSH	PIN TYPE	DESCRIPTION
GPIO40	0, 4, 8, 12	101	80	64	53	48	I/O	General-Purpose Input Output 40
SPIB_PICO	1						I/O	SPI-B Peripheral In, Controller Out (PICO)
EPWM2_B	5						O	ePWM-2 Output B
PMBUSA_SDA	6						I/OD	PMBus-A Open-Drain Bidirectional Data
FSIRXA_D0	7						I	FSIRX-A Primary Data Input
SCIB_TX	9						O	SCI-B Transmit Data
EQEP1_A	10						I	eQEP-1 Input A
LINA_TX	11						O	LIN-A Transmit
CLB_OUTPUTXBAR4	14						O	CLB Output X-BAR Output 4
EQEP3_STROBE	15						I/O	eQEP-3 Strobe
GPIO41	0, 4, 8, 12	103	82	66	55	50	I/O	General-Purpose Input Output 41
EPWM7_A	1						O	ePWM-7 Output A
EPWM2_A	5						O	ePWM-2 Output A
PMBUSA_SCL	6						I/OD	PMBus-A Open-Drain Bidirectional Clock
FSIRXA_D1	7						I	FSIRX-A Optional Additional Data Input
SCIB_RX	9						I	SCI-B Receive Data
EQEP1_B	10						I	eQEP-1 Input B
LINA_RX	11						I	LIN-A Receive
EPWM12_B	13						O	ePWM-12 Output B
SPIB_POCI	14						I/O	SPI-B Peripheral Out, Controller In (POCI)
USB0DP	ALT						O	USB-0 PHY differential data
GPIO42	0, 4, 8, 12	94		57			I/O	General-Purpose Input Output 42
LINA_RX	2						I	LIN-A Receive
OUTPUTXBAR5	3						O	Output X-BAR Output 5
PMBUSA_CTL	5						I/O	PMBus-A Control Signal - Target Input/Controller Output
I2CA_SDA	6						I/OD	I2C-A Open-Drain Bidirectional Data
SCIC_RX	7						I	SCI-C Receive Data
EQEP1_STROBE	10						I/O	eQEP-1 Strobe
CLB_OUTPUTXBAR3	11						O	CLB Output X-BAR Output 3
GPIO43	0, 4, 8, 12	91		54			I/O	General-Purpose Input Output 43
OUTPUTXBAR6	3						O	Output X-BAR Output 6
PMBUSA_ALERT	5, 9						I/OD	PMBus-A Open-Drain Bidirectional Alert Signal
I2CA_SCL	6						I/OD	I2C-A Open-Drain Bidirectional Clock
SCIC_TX	7						O	SCI-C Transmit Data
EQEP1_INDEX	10						I/O	eQEP-1 Index
CLB_OUTPUTXBAR4	11						O	CLB Output X-BAR Output 4
GPIO44	0, 4, 8, 12	106	85	69			I/O	General-Purpose Input Output 44
OUTPUTXBAR7	3						O	Output X-BAR Output 7
EQEP1_A	5						I	eQEP-1 Input A
PMBUSA_SDA	6						I/OD	PMBus-A Open-Drain Bidirectional Data
FSITXA_CLK	7						O	FSITX-A Output Clock
PMBUSA_CTL	9						I/O	PMBus-A Control Signal - Target Input/Controller Output
CLB_OUTPUTXBAR3	10						O	CLB Output X-BAR Output 3
FSIRXA_D0	11						I	FSIRX-A Primary Data Input
LINA_TX	14						O	LIN-A Transmit

Copyright © 2026 Texas Instruments Incorporated

Table 5-1. Pin Attributes (continued)

SIGNAL NAME	MUX POSITION	128 PDT	100 PZ	80 PNA	64 PM	56 RSH	PIN TYPE	DESCRIPTION
GPIO45	0, 4, 8, 12						I/O	General-Purpose Input Output 45
OUTPUTXBAR8	3						O	Output X-BAR Output 8
FSITXA_D0	7	110		73			O	FSITX-A Primary Data Output
PMBUSA_ALERT	9						I/OD	PMBus-A Open-Drain Bidirectional Alert Signal
CLB_OUTPUTXBAR4	10						O	CLB Output X-BAR Output 4
GPIO46	0, 4, 8, 12						I/O	General-Purpose Input Output 46
LINA_TX	3						O	LIN-A Transmit
MCANA_TX	5	4		6			O	CAN/CAN FD Transmit
FSITXA_D1	7						O	FSITX-A Optional Additional Data Output
PMBUSA_SDA	9						I/OD	PMBus-A Open-Drain Bidirectional Data
GPIO47	0, 4, 8, 12						I/O	General-Purpose Input Output 47
LINA_RX	3						I	LIN-A Receive
MCANA_RX	5	8	6				I	CAN/CAN FD Receive
CLB_OUTPUTXBAR2	7						O	CLB Output X-BAR Output 2
PMBUSA_SCL	9						I/OD	PMBus-A Open-Drain Bidirectional Clock
GPIO48	0, 4, 8, 12						I/O	General-Purpose Input Output 48
OUTPUTXBAR3	1						O	Output X-BAR Output 3
MCANA_TX	5	11	7				O	CAN/CAN FD Transmit
SCIA_TX	6						O	SCI-A Transmit Data
PMBUSA_SDA	9						I/OD	PMBus-A Open-Drain Bidirectional Data
GPIO49	0, 4, 8, 12						I/O	General-Purpose Input Output 49
OUTPUTXBAR4	1						O	Output X-BAR Output 4
MCANA_RX	5	12	8				I	CAN/CAN FD Receive
SCIA_RX	6						I	SCI-A Receive Data
LINA_RX	9						I	LIN-A Receive
FSITXA_D0	14						O	FSITX-A Primary Data Output
GPIO50	0, 4, 8, 12						I/O	General-Purpose Input Output 50
EQEP1_A	1						I	eQEP-1 Input A
MCANA_TX	5	13	9				O	CAN/CAN FD Transmit
SPIB_PICO	6						I/O	SPI-B Peripheral In, Controller Out (PICO)
I2CB_SDA	9						I/OD	I2C-B Open-Drain Bidirectional Data
FSITXA_D1	14						O	FSITX-A Optional Additional Data Output
GPIO51	0, 4, 8, 12						I/O	General-Purpose Input Output 51
EQEP1_B	1						I	eQEP-1 Input B
MCANA_RX	5	14	10				I	CAN/CAN FD Receive
SPIB_POCI	6						I/O	SPI-B Peripheral Out, Controller In (POCI)
I2CB_SCL	9						I/OD	I2C-B Open-Drain Bidirectional Clock
FSITXA_CLK	14						O	FSITX-A Output Clock
GPIO52	0, 4, 8, 12						I/O	General-Purpose Input Output 52
EQEP1_STROBE	1						I/O	eQEP-1 Strobe
CLB_OUTPUTXBAR5	5	15	11				O	CLB Output X-BAR Output 5
SPIB_CLK	6						I/O	SPI-B Clock
SYNCOUT	9						O	External ePWM Synchronization Pulse
FSIRXA_D0	14						I	FSIRX-A Primary Data Input

Copyright © 2026 Texas Instruments Incorporated

Table 5-1. Pin Attributes (continued)

SIGNAL NAME	MUX POSITION	128 PDT	100 PZ	80 PNA	64 PM	56 RSH	PIN TYPE	DESCRIPTION
GPIO53	0, 4, 8, 12						I/O	General-Purpose Input Output 53
EQEP1_INDEX	1						I/O	eQEP-1 Index
CLB_OUTPUTXBAR6	5						O	CLB Output X-BAR Output 6
SPIB_PTE	6	16	12				I/O	SPI-B Peripheral Transmit Enable (PTE)
ADCSOCAO	9						O	ADC Start of Conversion A for External ADC
MCANB_RX	10						I	CAN/CAN FD Receive
FSIRXA_D1	14						I	FSIRX-A Optional Additional Data Input
GPIO54	0, 4, 8, 12						I/O	General-Purpose Input Output 54
SPIA_PICO	1						I/O	SPI-A Peripheral In, Controller Out (PICO)
EQEP2_A	5						I	eQEP-2 Input A
OUTPUTXBAR2	6	17	13				O	Output X-BAR Output 2
ADCSOCBO	9						O	ADC Start of Conversion B for External ADC
LINA_TX	10						O	LIN-A Transmit
FSIRXA_CLK	14						I	FSIRX-A Input Clock
GPIO55	0, 4, 8, 12						I/O	General-Purpose Input Output 55
SPIA_POCI	1						I/O	SPI-A Peripheral Out, Controller In (POCI)
EQEP2_B	5						I	eQEP-2 Input B
OUTPUTXBAR3	6	51	43				O	Output X-BAR Output 3
ERRORSTS	9						O	Error Status Output. This signal requires an external pulldown.
LINA_RX	10						I	LIN-A Receive
GPIO56	0, 4, 8, 12						I/O	General-Purpose Input Output 56
SPIA_CLK	1						I/O	SPI-A Clock
CLB_OUTPUTXBAR7	2						O	CLB Output X-BAR Output 7
MCANA_TX	3						O	CAN/CAN FD Transmit
EQEP2_STROBE	5	80	65				I/O	eQEP-2 Strobe
SCIB_TX	6						O	SCI-B Transmit Data
SPIB_PICO	9						I/O	SPI-B Peripheral In, Controller Out (PICO)
I2CA_SDA	10						I/OD	I2C-A Open-Drain Bidirectional Data
EQEP1_A	11						I	eQEP-1 Input A
FSIRXA_D1	14						I	FSIRX-A Optional Additional Data Input
GPIO57	0, 4, 8, 12						I/O	General-Purpose Input Output 57
SPIA_PTE	1						I/O	SPI-A Peripheral Transmit Enable (PTE)
CLB_OUTPUTXBAR8	2						O	CLB Output X-BAR Output 8
MCANA_RX	3						I	CAN/CAN FD Receive
EQEP2_INDEX	5	81	66				I/O	eQEP-2 Index
SCIB_RX	6						I	SCI-B Receive Data
SPIB_POCI	9						I/O	SPI-B Peripheral Out, Controller In (POCI)
I2CA_SCL	10						I/OD	I2C-A Open-Drain Bidirectional Clock
EQEP1_B	11						I	eQEP-1 Input B
FSIRXA_CLK	14						I	FSIRX-A Input Clock
GPIO58	0, 4, 8, 12						I/O	General-Purpose Input Output 58
OUTPUTXBAR1	5						O	Output X-BAR Output 1
SPIB_CLK	6						I/O	SPI-B Clock
LINA_TX	9	82	67				O	LIN-A Transmit
MCANB_TX	10						O	CAN/CAN FD Transmit
EQEP1_STROBE	11						I/O	eQEP-1 Strobe
FSIRXA_D0	14						I	FSIRX-A Primary Data Input

Copyright © 2026 Texas Instruments Incorporated

Table 5-1. Pin Attributes (continued)

SIGNAL NAME	MUX POSITION	128 PDT	100 PZ	80 PNA	64 PM	56 RSH	PIN TYPE	DESCRIPTION
GPIO59	0, 4, 8, 12	121	92				I/O	General-Purpose Input Output 59
OUTPUTXBAR2	5						O	Output X-BAR Output 2
SPIB_PTE	6						I/O	SPI-B Peripheral Transmit Enable (PTE)
LINA_RX	9						I	LIN-A Receive
MCANB_RX	10						I	CAN/CAN FD Receive
EQEP1_INDEX	11						I/O	eQEP-1 Index
GPIO60	0, 4, 8, 12	52	44				I/O	General-Purpose Input Output 60
EPWM12_B	1						O	ePWM-12 Output B
MCANA_TX	3						O	CAN/CAN FD Transmit
OUTPUTXBAR3	5						O	Output X-BAR Output 3
SPIB_PICO	6						I/O	SPI-B Peripheral In, Controller Out (PICO)
GPIO61	0, 4, 8, 12	120	91				I/O	General-Purpose Input Output 61
MCANA_RX	3						I	CAN/CAN FD Receive
OUTPUTXBAR4	5						O	Output X-BAR Output 4
SPIB_POCI	6						I/O	SPI-B Peripheral Out, Controller In (POCI)
MCANB_RX	14						I	CAN/CAN FD Receive
GPIO62	0, 4, 8, 12	58	46	31			I/O	General-Purpose Input Output 62
EPWM10_A	1						O	ePWM-10 Output A
OUTPUTXBAR3	2						O	Output X-BAR Output 3
MCANA_TX	5						O	CAN/CAN FD Transmit
SCIA_TX	6						O	SCI-A Transmit Data
PMBUSA_SDA	9						I/OD	PMBus-A Open-Drain Bidirectional Data
GPIO63	0, 4, 8, 12	59	47	32			I/O	General-Purpose Input Output 63
EPWM10_B	1						O	ePWM-10 Output B
OUTPUTXBAR4	2						O	Output X-BAR Output 4
MCANA_RX	5						I	CAN/CAN FD Receive
SCIA_RX	6						I	SCI-A Receive Data
LINA_RX	9						I	LIN-A Receive
GPIO64	0, 4, 8, 12	56					I/O	General-Purpose Input Output 64
SCIA_RX	1						I	SCI-A Receive Data
EPWM11_A	2						O	ePWM-11 Output A
EPWM7_A	3						O	ePWM-7 Output A
OUTPUTXBAR5	5						O	Output X-BAR Output 5
EQEP1_A	6						I	eQEP-1 Input A
EQEP2_STROBE	9						I/O	eQEP-2 Strobe
LINA_TX	10						O	LIN-A Transmit
SPIB_CLK	11						I/O	SPI-B Clock
ERRORSTS	13						O	Error Status Output. This signal requires an external pulldown.
I2CB_SDA	14						I/OD	I2C-B Open-Drain Bidirectional Data
GPIO65	0, 4, 8, 12	57					I/O	General-Purpose Input Output 65
EQEP1_A	1						I	eQEP-1 Input A
EPWM11_B	2						O	ePWM-11 Output B
SPIB_PICO	6						I/O	SPI-B Peripheral In, Controller Out (PICO)
MCANA_TX	9						O	CAN/CAN FD Transmit
I2CA_SCL	11						I/OD	I2C-A Open-Drain Bidirectional Clock

Copyright © 2026 Texas Instruments Incorporated

Table 5-1. Pin Attributes (continued)

SIGNAL NAME	MUX POSITION	128 PDT	100 PZ	80 PNA	64 PM	56 RSH	PIN TYPE	DESCRIPTION
GPIO66	0, 4, 8, 12	9					I/O	General-Purpose Input Output 66
EQEP1_B	1						I	eQEP-1 Input B
EPWM12_A	2						O	ePWM-12 Output A
SPIB_POCI	6						I/O	SPI-B Peripheral Out, Controller In (POCI)
MCANA_RX	9						I	CAN/CAN FD Receive
I2CA_SDA	11						I/OD	I2C-A Open-Drain Bidirectional Data
GPIO67	0, 4, 8, 12	10					I/O	General-Purpose Input Output 67
EPWM7_B	1						O	ePWM-7 Output B
EPWM12_B	2						O	ePWM-12 Output B
MCANA_TX	3						O	CAN/CAN FD Transmit
EQEP1_INDEX	5						I/O	eQEP-1 Index
SCIB_RX	6						I	SCI-B Receive Data
PMBUSA_ALERT	7						I/OD	PMBus-A Open-Drain Bidirectional Alert Signal
FSIRXA_CLK	9						I	FSIRX-A Input Clock
LINA_RX	10						I	LIN-A Receive
SPIA_POCI	11						I/O	SPI-A Peripheral Out, Controller In (POCI)
SCIC_RX	15						I	SCI-C Receive Data
GPIO68	0, 4, 8, 12	72					I/O	General-Purpose Input Output 68
EPWM7_A	1						O	ePWM-7 Output A
EPWM3_A	2						O	ePWM-3 Output A
MCANA_RX	3						I	CAN/CAN FD Receive
EQEP1_STROBE	5						I/O	eQEP-1 Strobe
SCIB_TX	6						O	SCI-B Transmit Data
PMBUSA_CTL	7						I/O	PMBus-A Control Signal - Target Input/Controller Output
FSIRXA_D0	9						I	FSIRX-A Primary Data Input
LINA_TX	10						O	LIN-A Transmit
SPIA_CLK	11						I/O	SPI-A Clock
SCIC_TX	15						O	SCI-C Transmit Data
GPIO69	0, 4, 8, 12	73					I/O	General-Purpose Input Output 69
EPWM6_B	1						O	ePWM-6 Output B
EPWM3_B	2						O	ePWM-3 Output B
OUTPUTXBAR7	3						O	Output X-BAR Output 7
EQEP1_B	5						I	eQEP-1 Input B
SCIB_RX	6						I	SCI-B Receive Data
SPIA_PTE	7						I/O	SPI-A Peripheral Transmit Enable (PTE)
FSIRXA_D1	9						I	FSIRX-A Optional Additional Data Input
LINA_RX	10						I	LIN-A Receive
EQEP2_A	11						I	eQEP-2 Input A
SPIA_PICO	13						I/O	SPI-A Peripheral In, Controller Out (PICO)
EQEP3_INDEX	15						I/O	eQEP-3 Index

Copyright © 2026 Texas Instruments Incorporated

Table 5-1. Pin Attributes (continued)

SIGNAL NAME	MUX POSITION	128 PDT	100 PZ	80 PNA	64 PM	56 RSH	PIN TYPE	DESCRIPTION
GPIO70	0, 4, 8, 12						I/O	General-Purpose Input Output 70
I2CA_SCL	1						I/OD	I2C-A Open-Drain Bidirectional Clock
SPIB_PTE	3						I/O	SPI-B Peripheral Transmit Enable (PTE)
OUTPUTXBAR4	5						O	Output X-BAR Output 4
LINA_RX	6	74					I	LIN-A Receive
FSIRXA_CLK	9						I	FSIRX-A Input Clock
MCANA_RX	10						I	CAN/CAN FD Receive
EQEP2_B	11						I	eQEP-2 Input B
ADCSOCAO	13						O	ADC Start of Conversion A for External ADC
EQEP3_A	15						I	eQEP-3 Input A
GPIO71	0, 4, 8, 12						I/O	General-Purpose Input Output 71
SPIA_PICO	1						I/O	SPI-A Peripheral In, Controller Out (PICO)
EPWM4_B	2						O	ePWM-4 Output B
OUTPUTXBAR7	3						O	Output X-BAR Output 7
EPWM9_A	5						O	ePWM-9 Output A
SCIA_TX	6						O	SCI-A Transmit Data
EQEP1_STROBE	9	83					I/O	eQEP-1 Strobe
PMBUSA_SCL	10						I/OD	PMBus-A Open-Drain Bidirectional Clock
XCLKOUT	11						O	External Clock Output. This pin outputs a divided-down version of a chosen clock signal from within the device.
EQEP2_INDEX	13						I/O	eQEP-2 Index
SPIB_POCI	14						I/O	SPI-B Peripheral Out, Controller In (POCI)
EQEP3_STROBE	15						I/O	eQEP-3 Strobe
GPIO72	0, 4, 8, 12						I/O	General-Purpose Input Output 72
SPIA_POCI	1						I/O	SPI-A Peripheral Out, Controller In (POCI)
EPWM5_A	2						O	ePWM-5 Output A
OUTPUTXBAR8	3						O	Output X-BAR Output 8
EPWM9_B	5						O	ePWM-9 Output B
SCIA_RX	6	84					I	SCI-A Receive Data
EQEP1_INDEX	9						I/O	eQEP-1 Index
PMBUSA_SDA	10						I/OD	PMBus-A Open-Drain Bidirectional Data
MCANA_TX	11						O	CAN/CAN FD Transmit
EPWM6_A	14						O	ePWM-6 Output A
EQEP3_B	15						I	eQEP-3 Input B
GPIO73	0, 4, 8, 12						I/O	General-Purpose Input Output 73
OUTPUTXBAR1	1						O	Output X-BAR Output 1
EPWM5_B	2						O	ePWM-5 Output B
SPIA_PTE	3						I/O	SPI-A Peripheral Transmit Enable (PTE)
EPWM8_A	5						O	ePWM-8 Output A
SPIB_PICO	6	85					I/O	SPI-B Peripheral In, Controller Out (PICO)
LINA_TX	9						O	LIN-A Transmit
PMBUSA_SCL	10						I/OD	PMBus-A Open-Drain Bidirectional Clock
SCIA_TX	11						O	SCI-A Transmit Data
ERRORSTS	13						O	Error Status Output. This signal requires an external pulldown.
EPWM9_A	14						O	ePWM-9 Output A

Copyright © 2026 Texas Instruments Incorporated

Table 5-1. Pin Attributes (continued)

SIGNAL NAME	MUX POSITION	128 PDT	100 PZ	80 PNA	64 PM	56 RSH	PIN TYPE	DESCRIPTION
GPIO74	0, 4, 8, 12	86					I/O	General-Purpose Input Output 74
EPWM2_B	1						O	ePWM-2 Output B
ADCSOCAO	3						O	ADC Start of Conversion A for External ADC
MCANA_TX	5						O	CAN/CAN FD Transmit
SPIA_POCI	6						I/O	SPI-A Peripheral Out, Controller In (POCI)
EQEP1_B	11						I	eQEP-1 Input B
GPIO75	0, 4, 8, 12	111					I/O	General-Purpose Input Output 75
EPWM1_B	1						O	ePWM-1 Output B
LINA_RX	3						I	LIN-A Receive
EPWM6_A	5						O	ePWM-6 Output A
SPIA_CLK	6						I/O	SPI-A Clock
EQEP1_STROBE	11						I/O	eQEP-1 Strobe
SCIC_RX	14						I	SCI-C Receive Data
GPIO76	0, 4, 8, 12	112					I/O	General-Purpose Input Output 76
EPWM4_A	1						O	ePWM-4 Output A
OUTPUTXBAR2	5						O	Output X-BAR Output 2
SPIA_PTE	6						I/O	SPI-A Peripheral Transmit Enable (PTE)
MCANA_RX	10						I	CAN/CAN FD Receive
EQEP1_INDEX	11						I/O	eQEP-1 Index
GPIO77	0, 4, 8, 12	113					I/O	General-Purpose Input Output 77
EPWM1_A	1						O	ePWM-1 Output A
OUTPUTXBAR3	5						O	Output X-BAR Output 3
SPIA_PICO	6						I/O	SPI-A Peripheral In, Controller Out (PICO)
MCANA_TX	10						O	CAN/CAN FD Transmit
EQEP1_A	11						I	eQEP-1 Input A
SCIC_TX	14						O	SCI-C Transmit Data
GPIO78	0, 4, 8, 12	114					I/O	General-Purpose Input Output 78
EPWM8_A	2						O	ePWM-8 Output A
EPWM3_A	3						O	ePWM-3 Output A
OUTPUTXBAR1	5						O	Output X-BAR Output 1
EPWM2_B	6						O	ePWM-2 Output B
FSITXA_CLK	9						O	FSITX-A Output Clock
GPIO79	0, 4, 8, 12	115					I/O	General-Purpose Input Output 79
EPWM8_B	2						O	ePWM-8 Output B
EPWM3_B	3						O	ePWM-3 Output B
MCANA_RX	5						I	CAN/CAN FD Receive
EPWM2_A	6						O	ePWM-2 Output A
I2CA_SDA	7						I/OD	I2C-A Open-Drain Bidirectional Data
PMBUSA_SCL	9						I/OD	PMBus-A Open-Drain Bidirectional Clock
GPIO80	0, 4, 8, 12	116					I/O	General-Purpose Input Output 80
EPWM1_A	1						O	ePWM-1 Output A
OUTPUTXBAR7	3						O	Output X-BAR Output 7
SCIA_RX	5						I	SCI-A Receive Data
I2CB_SDA	6						I/OD	I2C-B Open-Drain Bidirectional Data
SPIA_PTE	7						I/O	SPI-A Peripheral Transmit Enable (PTE)
FSITXA_D0	9						O	FSITX-A Primary Data Output
MCANA_RX	10						I	CAN/CAN FD Receive
CLB_OUTPUTXBAR8	11						O	CLB Output X-BAR Output 8
EQEP1_INDEX	13						I/O	eQEP-1 Index
EPWM3_A	15						O	ePWM-3 Output A

Copyright © 2026 Texas Instruments Incorporated

Table 5-1. Pin Attributes (continued)

SIGNAL NAME	MUX POSITION	128 PDT	100 PZ	80 PNA	64 PM	56 RSH	PIN TYPE	DESCRIPTION
GPIO81	0, 4, 8, 12						I/O	General-Purpose Input Output 81
EPWM1_B	1						O	ePWM-1 Output B
OUTPUTXBAR6	2						O	Output X-BAR Output 6
SCIC_RX	3						I	SCI-C Receive Data
SPIB_CLK	5	117					I/O	SPI-B Clock
I2CB_SCL	6						I/OD	I2C-B Open-Drain Bidirectional Clock
FSITXA_D1	9						O	FSITX-A Optional Additional Data Output
MCANA_TX	10						O	CAN/CAN FD Transmit
EQEP3_INDEX	11						I/O	eQEP-3 Index
GPIO211	0, 4, 8, 12	43					I/O	General-Purpose Input Output 211 This pin also has analog functions which are described in the ANALOG section of this table.
EPWM10_A	1						O	ePWM-10 Output A
EQEP3_A	5						I	eQEP-3 Input A
GPIO212	0, 4, 8, 12	44					I/O	General-Purpose Input Output 212 This pin also has analog functions which are described in the ANALOG section of this table.
EPWM10_B	1						O	ePWM-10 Output B
EQEP3_B	5						I	eQEP-3 Input B
GPIO213	0, 4, 8, 12	45					I/O	General-Purpose Input Output 213 This pin also has analog functions which are described in the ANALOG section of this table.
EPWM11_A	1						O	ePWM-11 Output A
EQEP3_STROBE	5						I/O	eQEP-3 Strobe
GPIO214	0, 4, 8, 12	46					I/O	General-Purpose Input Output 214 This pin also has analog functions which are described in the ANALOG section of this table.
EPWM11_B	1						O	ePWM-11 Output B
EQEP3_INDEX	5						I/O	eQEP-3 Index
GPIO215	0, 4, 8, 12	47					I/O	General-Purpose Input Output 215 This pin also has analog functions which are described in the ANALOG section of this table.
EPWM7_B	1						O	ePWM-7 Output B
EQEP2_A	5						I	eQEP-2 Input A
GPIO224	0, 4, 8, 12	21	17	13	9	7	I/O	General-Purpose Input Output 224 This pin also has analog functions which are described in the ANALOG section of this table.
EPWM11_B	1						O	ePWM-11 Output B
OUTPUTXBAR3	5						O	Output X-BAR Output 3
SPIA_PICO	6						I/O	SPI-A Peripheral In, Controller Out (PICO)
EPWM1_A	9						O	ePWM-1 Output A
MCANA_TX	10						O	CAN/CAN FD Transmit
EQEP1_A	11						I	eQEP-1 Input A
ADCE_EXTMUXSEL3	13						O	ADCE external mux selection pin for position 3
SCIC_TX	14						O	SCI-C Transmit Data

Copyright © 2026 Texas Instruments Incorporated

Table 5-1. Pin Attributes (continued)

SIGNAL NAME	MUX POSITION	128 PDT	100 PZ	80 PNA	64 PM	56 RSH	PIN TYPE	DESCRIPTION
GPIO226	0, 4, 8, 12	19	15	11	7		I/O	General-Purpose Input Output 226 This pin also has analog functions which are described in the ANALOG section of this table.
EPWM10_B	1						O	ePWM-10 Output B
LINA_RX	3						I	LIN-A Receive
EPWM6_A	5						O	ePWM-6 Output A
SPIA_CLK	6						I/O	SPI-A Clock
EPWM1_B	9						O	ePWM-1 Output B
EQEP1_STROBE	11						I/O	eQEP-1 Strobe
ADCE_EXTMUXSEL1	13						O	ADCE external mux selection pin for position 1
SCIC_RX	14						I	SCI-C Receive Data
GPIO227	0, 4, 8, 12	48	38	28	24	22	I/O	General-Purpose Input Output 227 This pin also has analog functions which are described in the ANALOG section of this table.
I2CB_SCL	1						I/OD	I2C-B Open-Drain Bidirectional Clock
EPWM3_A	3						O	ePWM-3 Output A
OUTPUTXBAR1	5						O	Output X-BAR Output 1
EPWM2_B	6						O	ePWM-2 Output B
GPIO228	0, 4, 8, 12	18	14	10	6		I/O	General-Purpose Input Output 228 This pin also has analog functions which are described in the ANALOG section of this table.
EPWM10_A	1						O	ePWM-10 Output A
ADCSOCAO	3						O	ADC Start of Conversion A for External ADC
MCANA_TX	5						O	CAN/CAN FD Transmit
SPIA_POCI	6						I/O	SPI-A Peripheral Out, Controller In (POCI)
EPWM2_B	9						O	ePWM-2 Output B
EQEP1_B	11						I	eQEP-1 Input B
ADCE_EXTMUXSEL0	13						O	ADCE external mux selection pin for position 0
GPIO230	0, 4, 8, 12	50	40	29	25	23	I/O	General-Purpose Input Output 230 This pin also has analog functions which are described in the ANALOG section of this table.
I2CB_SDA	1						I/OD	I2C-B Open-Drain Bidirectional Data
EPWM3_B	3						O	ePWM-3 Output B
MCANA_RX	5						I	CAN/CAN FD Receive
EPWM2_A	6						O	ePWM-2 Output A
I2CA_SDA	7						I/OD	I2C-A Open-Drain Bidirectional Data
PMBUSA_SCL	9						I/OD	PMBus-A Open-Drain Bidirectional Clock
GPIO242	0, 4, 8, 12	20	16	12	8	6	I/O	General-Purpose Input Output 242 This pin also has analog functions which are described in the ANALOG section of this table.
EPWM11_A	1						O	ePWM-11 Output A
OUTPUTXBAR2	5						O	Output X-BAR Output 2
SPIA_PTE	6						I/O	SPI-A Peripheral Transmit Enable (PTE)
EPWM4_A	9						O	ePWM-4 Output A
MCANA_RX	10						I	CAN/CAN FD Receive
EQEP1_INDEX	11						I/O	eQEP-1 Index
ADCE_EXTMUXSEL2	13						O	ADCE external mux selection pin for position 2
GPIO247	0, 4, 8, 12		42				I/O	General-Purpose Input Output 247 This pin also has analog functions which are described in the ANALOG section of this table.
EPWM12_B	1						O	ePWM-12 Output B
GPIO253	0, 4, 8, 12		41				I/O	General-Purpose Input Output 253 This pin also has analog functions which are described in the ANALOG section of this table.
EPWM12_A	1						O	ePWM-12 Output A

Copyright © 2026 Texas Instruments Incorporated

Table 5-1. Pin Attributes (continued)

SIGNAL NAME	MUX POSITION	128 PDT	100 PZ	80 PNA	64 PM	56 RSH	PIN TYPE	DESCRIPTION
TEST, JTAG, AND RESET								
TCK		75	60	45	36	33	I	JTAG test clock with internal pullup.
TMS		77	62	47	38	35	I/O	JTAG test-mode select (TMS) with internal pullup. This serial control input is clocked into the TAP controller on the rising edge of TCK. This device does not have a TRSTn pin. An external pullup resistor (recommended 2.2 kΩ) on the TMS pin to VDDIO should be placed on the board to keep JTAG in reset during normal operation.
XRSn		3	2	5	3	4	I/OD	Device Reset (in) and Watchdog Reset (out). During a power-on condition, this pin is driven low by the device. An external circuit may also drive this pin to assert a device reset. This pin is also driven low by the MCU when a watchdog reset occurs. During watchdog reset, the XRSn pin is driven low for the watchdog reset duration of 512 OSCCLK cycles. A resistor between 2.2 kΩ and 10 kΩ should be placed between XRSn and VDDIO. If a capacitor is placed between XRSn and VSS for noise filtering, it should be 100 nF or smaller. These values will allow the watchdog to properly drive the XRSn pin to VOL within 512 OSCCLK cycles when the watchdog reset is asserted. This pin is an open-drain output with an internal pullup. If this pin is driven by an external device, it should be done using an open-drain device.
POWER AND GROUND								
VDD		6, 54, 90, 108	4, 71, 87	8, 53, 71	4, 44, 59	5, 41, 53		1.2-V Digital Logic Power Pins. TI recommends placing a decoupling capacitor near each VDD pin with a minimum total capacitance of approximately 10 µF. It is also recommended that all VDD pins be externally connected to each other when internal VREG is used.
VDDA		41	34	26	22	20		3.3-V Analog Power Pins. Place a minimum 2.2-µF decoupling capacitor on each pin.
VDDIO		5, 55, 89, 109	3, 70, 88	7, 52, 72	43, 60	40, 54		3.3-V Digital I/O Power Pins. Place a minimum 0.1-µF decoupling capacitor on each pin.
VREGENZ		93	73	56	46	42	I	Internal voltage regulator enable with internal pulldown. Tie low to VSS to enable internal VREG. Tie high to VDDIO to use an external supply.
VSS		7, 53, 92, 107	5, 45, 72, 86	9, 30, 55, 70	5, 26, 45, 58	PAD		Digital Ground
VSSA		40	33	25	21	19		Analog Ground

(1) On the 128-PDT package, VREFLO is assigned to pins 33 and 34; these pins should be tied together at the PCB level. On the 100-PZ package, VREFLO is assigned to pins 26 and 27; these pins should be tied together at the PCB level.
(2) On the 128-PDT package, VREFHI is assigned to pins 31 and 32; these pins should be tied together at the PCB level. On the 100-PZ package, VREFHI is assigned to pins 24 and 25; these pins should be tied together at the PCB level.

Copyright © 2026 Texas Instruments Incorporated

5.3 Signal Descriptions

5.3.1 Analog Signals

Table 5-2. Analog Signals

SIGNAL NAME	PIN TYPE	DESCRIPTION	128 PDT	100 PZ	80 PNA	64 PM	56 RSH
A0	I	ADC-A Input 0	30	23	19	15	13
A1	I	ADC-A Input 1	29	22	18	14	12
A2	I	ADC-A Input 2	21	17	13	9	7
A3	I	ADC-A Input 3	20	18	12	8	6
A4	I	ADC-A Input 4	42	36	27	23	21
A5	I	ADC-A Input 5	28	35	17	13	11
A6	I	ADC-A Input 6	18	14	10	6	
A7	I	ADC-A Input 7	37	31	23	19	17
A8	I	ADC-A Input 8	39	37	24	20	18
A9	I	ADC-A Input 9	48	38	28	24	22
A10	I	ADC-A Input 10	50	40	29	25	23
A11	I	ADC-A Input 11	27	20	16	12	10
A12	I	ADC-A Input 12	35	28	22	18	16
A13	I	ADC-A Input 13	33, 34	26, 27	21	17	15
A14	I	ADC-A Input 14	26	19	15	11	9
A15	I	ADC-A Input 15	22		14	10	8
A16	I	ADC-A Input 16	2	1	4	2	3
A17	I	ADC-A Input 17	60	48	33	27	24
A18	I	ADC-A Input 18	61	49	34	28	25
A19	I	ADC-A Input 19	62	50	35	29	26
A20	I	ADC-A Input 20	63	51	36	30	27
A24	I	ADC-A Input 24	64	52	37	31	28
A25	I	ADC-A Input 25	67	55	40	34	31
A26	I	ADC-A Input 26	24				
A27	I	ADC-A Input 27	44				
A28	I	ADC-A Input 28	47				
AIO208	I	Analog Pin Used For Digital Input 208	23				
AIO209	I	Analog Pin Used For Digital Input 209	24				
AIO210	I	Analog Pin Used For Digital Input 210	25				
AIO225	I	Analog Pin Used For Digital Input 225	42	36	27	23	21
AIO229	I	Analog Pin Used For Digital Input 229		18			
AIO231	I	Analog Pin Used For Digital Input 231	30	23	19	15	13
AIO232	I	Analog Pin Used For Digital Input 232	29	22	18	14	12
AIO233	I	Analog Pin Used For Digital Input 233	22		14	10	8
AIO234	I	Analog Pin Used For Digital Input 234	31, 32	24, 25	20	16	14
AIO235	I	Analog Pin Used For Digital Input 235	33, 34	26, 27	21	17	15
AIO237	I	Analog Pin Used For Digital Input 237	27	20	16	12	10
AIO238	I	Analog Pin Used For Digital Input 238	35	28	22	18	16
AIO239	I	Analog Pin Used For Digital Input 239	26	19	15	11	9
AIO240	I	Analog Pin Used For Digital Input 240		37			
AIO241	I	Analog Pin Used For Digital Input 241	39		24	20	18
AIO244	I	Analog Pin Used For Digital Input 244	28	21	17	13	11

Copyright © 2026 Texas Instruments Incorporated

Table 5-2. Analog Signals (continued)

SIGNAL NAME	PIN TYPE	DESCRIPTION	128 PDT	100 PZ	80 PNA	64 PM	56 RSH
AIO245	I	Analog Pin Used For Digital Input 245	37	31	23	19	17
AIO248	I	Analog Pin Used For Digital Input 248	35	29	22	18	16
AIO249	I	Analog Pin Used For Digital Input 249		35			
AIO251	I	Analog Pin Used For Digital Input 251	36	30			
AIO252	I	Analog Pin Used For Digital Input 252	38	32			
B0	I	ADC-B Input 0	39	41	24	20	18
B1	I	ADC-B Input 1	50	40	29	25	23
B2	I	ADC-B Input 2	19	15	11	7	
B3	I	ADC-B Input 3	20	16	12	8	6
B4	I	ADC-B Input 4	49	39	28	24	22
B5	I	ADC-B Input 5	38	32			
B6	I	ADC-B Input 6	21	17	13	9	7
B7	I	ADC-B Input 7	29	22	18	14	12
B8	I	ADC-B Input 8	42	36	27	23	21
B9	I	ADC-B Input 9	22	18	14	10	8
B10	I	ADC-B Input 10	27	20	16	12	10
B11	I	ADC-B Input 11	36	30			
B12	I	ADC-B Input 12	28	21	17	13	11
B13	I	ADC-B Input 13	33, 34	26, 27	21	17	15
B14	I	ADC-B Input 14	26	19	15	11	9
B15	I	ADC-B Input 15	30	23	19	15	13
B16	I	ADC-B Input 16	2	1	4	2	3
B17	I	ADC-B Input 17	60	48	33	27	24
B18	I	ADC-B Input 18	61	49	34	28	25
B19	I	ADC-B Input 19	62	50	35	29	26
B20	I	ADC-B Input 20	63	51	36	30	27
B24	I	ADC-B Input 24	65	53	38	32	29
B25	I	ADC-B Input 25	68	56	41	35	32
B26	I	ADC-B Input 26	25				
B27	I	ADC-B Input 27	45				
B30	I	ADC-B Input 30	37	31	23	19	17
C0	I	ADC-C Input 0	27	20	16	12	10
C1	I	ADC-C Input 1	35	29	22	18	16
C2	I	ADC-C Input 2	28	21	17	13	11
C3	I	ADC-C Input 3	37	31	23	19	17
C4	I	ADC-C Input 4	26	19	15	11	9
C5	I	ADC-C Input 5	20	28	12	8	6
C6	I	ADC-C Input 6	19	15	11	7	
C7	I	ADC-C Input 7	22	18	14	10	8
C8	I	ADC-C Input 8	49	39	28	24	22
C9	I	ADC-C Input 9	21	17	13	9	7
C10	I	ADC-C Input 10	50	40	29	25	23
C11	I	ADC-C Input 11	39	41	24	20	18
C13	I	ADC-C Input 13	33, 34	26, 27	21	17	15

Copyright © 2026 Texas Instruments Incorporated

Table 5-2. Analog Signals (continued)

SIGNAL NAME	PIN TYPE	DESCRIPTION	128 PDT	100 PZ	80 PNA	64 PM	56 RSH
C14	I	ADC-C Input 14	42	42	27	23	21
C15	I	ADC-C Input 15	30	23	19	15	13
C16	I	ADC-C Input 16	2	1	4	2	3
C17	I	ADC-C Input 17	60	48	33	27	24
C18	I	ADC-C Input 18	61	49	34	28	25
C19	I	ADC-C Input 19	62	50	35	29	26
C20	I	ADC-C Input 20	63	51	36	30	27
C24	I	ADC-C Input 24	66	54	39	33	30
C25	I	ADC-C Input 25	23				
C26	I	ADC-C Input 26	43				
C27	I	ADC-C Input 27	46				
CMP1_DACL	I	CMPSS-1 Low DAC Output	29	22	18	14	12
CMP1_HN0	I	CMPSS-1 High Comparator Negative Input 0	22		14	10	8
CMP1_HN1	I	CMPSS-1 High Comparator Negative Input 1	27	20	16	12	10
CMP1_HP0	I	CMPSS-1 High Comparator Positive Input 0	21	17	13	9	7
CMP1_HP1	I	CMPSS-1 High Comparator Positive Input 1	27	20	16	12	10
CMP1_HP2	I	CMPSS-1 High Comparator Positive Input 2	18	14	10	6	
CMP1_HP3	I	CMPSS-1 High Comparator Positive Input 3	22		14	10	8
CMP1_HP4	I	CMPSS-1 High Comparator Positive Input 4	29	22	18	14	12
CMP1_HP5	I	CMPSS-1 High Comparator Positive Input 5	38	32			
CMP1_LN0	I	CMPSS-1 Low Comparator Negative Input 0	22		14	10	8
CMP1_LN1	I	CMPSS-1 Low Comparator Negative Input 1	27	20	16	12	10
CMP1_LP0	I	CMPSS-1 Low Comparator Positive Input 0	21	17	13	9	7
CMP1_LP1	I	CMPSS-1 Low Comparator Positive Input 1	27	20	16	12	10
CMP1_LP2	I	CMPSS-1 Low Comparator Positive Input 2	18	14	10	6	
CMP1_LP3	I	CMPSS-1 Low Comparator Positive Input 3	22		14	10	8
CMP1_LP4	I	CMPSS-1 Low Comparator Positive Input 4	29	22	18	14	12
CMP1_LP5	I	CMPSS-1 Low Comparator Positive Input 5	38	32			
CMP2_HN0	I	CMPSS-2 High Comparator Negative Input 0	50	40	29	25	23
CMP2_HN1	I	CMPSS-2 High Comparator Negative Input 1	35	28	22	18	16
CMP2_HP0	I	CMPSS-2 High Comparator Positive Input 0	42	36	27	23	21
CMP2_HP1	I	CMPSS-2 High Comparator Positive Input 1	35	28	22	18	16
CMP2_HP2	I	CMPSS-2 High Comparator Positive Input 2	48	38	28	24	22
CMP2_HP3	I	CMPSS-2 High Comparator Positive Input 3	50	40, 41	29	25	23
CMP2_HP5	I	CMPSS-2 High Comparator Positive Input 5	28	35	17	13	11
CMP2_LN0	I	CMPSS-2 Low Comparator Negative Input 0	50	40	29	25	23
CMP2_LN1	I	CMPSS-2 Low Comparator Negative Input 1	35	28	22	18	16
CMP2_LP0	I	CMPSS-2 Low Comparator Positive Input 0	42	36	27	23	21
CMP2_LP1	I	CMPSS-2 Low Comparator Positive Input 1	35	28	22	18	16
CMP2_LP2	I	CMPSS-2 Low Comparator Positive Input 2	48	38	28	24	22
CMP2_LP3	I	CMPSS-2 Low Comparator Positive Input 3	50	40, 41	29	25	23
CMP2_LP5	I	CMPSS-2 Low Comparator Positive Input 5	28	35	17	13	11

Copyright © 2026 Texas Instruments Incorporated

Table 5-2. Analog Signals (continued)

SIGNAL NAME	PIN TYPE	DESCRIPTION	128 PDT	100 PZ	80 PNA	64 PM	56 RSH
CMP3_HN0	I	CMPSS-3 High Comparator Negative Input 0	20	16	12	8	6
CMP3_HN1	I	CMPSS-3 High Comparator Negative Input 1	28	21	17	13	11
CMP3_HP0	I	CMPSS-3 High Comparator Positive Input 0	19	15	11	7	
CMP3_HP1	I	CMPSS-3 High Comparator Positive Input 1	28	21	17	13	11
CMP3_HP2	I	CMPSS-3 High Comparator Positive Input 2	30	23	19	15	13
CMP3_HP3	I	CMPSS-3 High Comparator Positive Input 3	20	16	12	8	6
CMP3_HP4	I	CMPSS-3 High Comparator Positive Input 4	26	19	15	11	9
CMP3_HP5	I	CMPSS-3 High Comparator Positive Input 5	20	18	12	8	6
CMP3_LN0	I	CMPSS-3 Low Comparator Negative Input 0	20	16	12	8	6
CMP3_LN1	I	CMPSS-3 Low Comparator Negative Input 1	28	21	17	13	11
CMP3_LP0	I	CMPSS-3 Low Comparator Positive Input 0	19	15	11	7	
CMP3_LP1	I	CMPSS-3 Low Comparator Positive Input 1	28	21	17	13	11
CMP3_LP2	I	CMPSS-3 Low Comparator Positive Input 2	30	23	19	15	13
CMP3_LP3	I	CMPSS-3 Low Comparator Positive Input 3	20	16	12	8	6
CMP3_LP4	I	CMPSS-3 Low Comparator Positive Input 4	26	19	15	11	9
CMP3_LP5	I	CMPSS-3 Low Comparator Positive Input 5	20	18	12	8	6
CMP4_HN0	I	CMPSS-4 High Comparator Negative Input 0	42	42	27	23	21
CMP4_HN1	I	CMPSS-4 High Comparator Negative Input 1	37	31	23	19	17
CMP4_HP0	I	CMPSS-4 High Comparator Positive Input 0	49	39	28	24	22
CMP4_HP1	I	CMPSS-4 High Comparator Positive Input 1	37	31	23	19	17
CMP4_HP2	I	CMPSS-4 High Comparator Positive Input 2	35	29	22	18	16
CMP4_HP3	I	CMPSS-4 High Comparator Positive Input 3	42	42	27	23	21
CMP4_HP4	I	CMPSS-4 High Comparator Positive Input 4	39	37	24	20	18
CMP4_HP5	I	CMPSS-4 High Comparator Positive Input 5	36	30			
CMP4_LN0	I	CMPSS-4 Low Comparator Negative Input 0	42	42	27	23	21
CMP4_LN1	I	CMPSS-4 Low Comparator Negative Input 1	37	31	23	19	17
CMP4_LP0	I	CMPSS-4 Low Comparator Positive Input 0	49	39	28	24	22
CMP4_LP1	I	CMPSS-4 Low Comparator Positive Input 1	37	31	23	19	17
CMP4_LP2	I	CMPSS-4 Low Comparator Positive Input 2	35	29	22	18	16
CMP4_LP3	I	CMPSS-4 Low Comparator Positive Input 3	42	42	27	23	21
CMP4_LP4	I	CMPSS-4 Low Comparator Positive Input 4	39	37	24	20	18
CMP4_LP5	I	CMPSS-4 Low Comparator Positive Input 5	36	30			
D0	I	ADC-D Input 0	64	52	37	31	28
D1	I	ADC-D Input 1	65	53	38	32	29
D2	I	ADC-D Input 2	66	54	39	33	30
D3	I	ADC-D Input 3	67	55	40	34	31
D4	I	ADC-D Input 4	68	56	41	35	32
D5	I	ADC-D Input 5	23				
D6	I	ADC-D Input 6	24				
D7	I	ADC-D Input 7	25				
D8	I	ADC-D Input 8	43				
D9	I	ADC-D Input 9	44				

Copyright © 2026 Texas Instruments Incorporated

Table 5-2. Analog Signals (continued)

SIGNAL NAME	PIN TYPE	DESCRIPTION	128 PDT	100 PZ	80 PNA	64 PM	56 RSH
D10	I	ADC-D Input 10	45				
D11	I	ADC-D Input 11	29	22	18	14	12
D12	I	ADC-D Input 12	37	31	23	19	17
D13	I	ADC-D Input 13	33, 34	26, 27	21	17	15
D14	I	ADC-D Input 14	18	14	10	6	
D15	I	ADC-D Input 15	38	32			
D16	I	ADC-D Input 16	36	30			
D18	I	ADC-D Input 18	46				
D19	I	ADC-D Input 19	47				
D20	I	ADC-D Input 20	31, 32	24, 25	20	16	14
DACA_OUT	O	Buffered DAC-A Output.	30	23	19	15	13
E0	I	ADC-E Input 0	64	52	37	31	28
E1	I	ADC-E Input 1	65	53	38	32	29
E2	I	ADC-E Input 2	66	54	39	33	30
E3	I	ADC-E Input 3	67	55	40	34	31
E4	I	ADC-E Input 4	68	56	41	35	32
E5	I	ADC-E Input 5	23				
E6	I	ADC-E Input 6	24				
E7	I	ADC-E Input 7	25				
E8	I	ADC-E Input 8	43				
E9	I	ADC-E Input 9	44				
E10	I	ADC-E Input 10	45				
E11	I	ADC-E Input 11	35	29	22	18	16
E12	I	ADC-E Input 12	19	15	11	7	
E13	I	ADC-E Input 13	33, 34	26, 27	21	17	15
E14	I	ADC-E Input 14	18	14	10	6	
E15	I	ADC-E Input 15	38	32			
E16	I	ADC-E Input 16	36	30			
E18	I	ADC-E Input 18	46				
E19	I	ADC-E Input 19	47				
E20	I	ADC-E Input 20	31, 32	24, 25	20	16	14
E30	I	ADC-E Input 30	37	31	23	19	17
PGA1_INM	I	PGA-1 Minus	22	18	14	10	8
PGA1_INP	I	PGA-1 Plus	21	17	13	9	7
PGA1_OUT	O	PGA-1 Output	26	19	15	11	9
PGA2_INM	I	PGA-2 Minus	28	21	17	13	11
PGA2_INP	I	PGA-2 Plus	20	16	12	8	6
PGA2_OUT	O	PGA-2 Output	27	20	16	12	10
PGA3_INM	I	PGA-3 Minus	36	30	23	19	17
PGA3_INP	I	PGA-3 Plus	35	29	22	18	16
PGA3_OUT	O	PGA-3 Output	38	32	24	20	18

Copyright © 2026 Texas Instruments Incorporated

Table 5-2. Analog Signals (continued)

SIGNAL NAME	PIN TYPE	DESCRIPTION	128 PDT	100 PZ	80 PNA	64 PM	56 RSH
VREFHI(1)	I	ADC High Reference. This can be sourced from either the internal voltage reference or from an external voltage reference. In either case a 2.2-µF capacitor between VREFHI and VREFLO must be placed on this pin. This capacitor should be placed as close to the device as possible. If all ADCs use the internal connection to VDDA to supply the high reference, then the ADC channels D20 and E20 can be sampled on the shared analog pin and the capacitor is not needed.	31, 32	24, 25	20	16	14
VREFLO(2)	I	ADC Low Reference If all ADCs use the internal connection to VSSA to supply the low reference, then the ADC channels A13/B13/C13/D13/E13 can be sampled on the shared analog pin.	33, 34	26, 27	21	17	15

(1) On the 128-PDT package, VREFHI is assigned to pins 31 and 32; these pins should be tied together at the PCB level. On the 100-PZ package, VREFHI is assigned to pins 24 and 25; these pins should be tied together at the PCB level.
(2) On the 128-PDT package, VREFLO is assigned to pins 33 and 34; these pins should be tied together at the PCB level. On the 100-PZ package, VREFLO is assigned to pins 26 and 27; these pins should be tied together at the PCB level.

Copyright © 2026 Texas Instruments Incorporated

5.3.2 Digital Signals

Table 5-3. Digital Signals

SIGNAL NAME	PIN TYPE	DESCRIPTION	GPIO	128 PDT	100 PZ	80 PNA	64 PM	56 RSH
ADCE_EXTMUXSEL0	O	ADCE external mux selection pin for position 0	20, 228	18, 60	14, 48	10, 33	6, 27	24
ADCE_EXTMUXSEL1	O	ADCE external mux selection pin for position 1	21, 226	19, 61	15, 49	11, 34	7, 28	25
ADCE_EXTMUXSEL2	O	ADCE external mux selection pin for position 2	242	20	16	12	8	6
ADCE_EXTMUXSEL3	O	ADCE external mux selection pin for position 3	224	21	17	13	9	7
ADCSOCAO	O	ADC Start of Conversion A for External ADC	8, 33, 53, 70, 74, 228	16, 18, 65, 74, 86, 95	12, 14, 53, 74	10, 38, 58	6, 32, 47	29
ADCSOCBO	O	ADC Start of Conversion B for External ADC	10, 32, 54	17, 79, 122	13, 64, 93	49, 76	40, 63	37
AUXCLKIN	I	Auxiliary Clock Input	29	1	100	3	1	2
CLB_OUTPUTXBAR1	O	CLB Output X-BAR Output 1	19, 22	88, 104	69, 83	51, 67	42, 56	39, 51
CLB_OUTPUTXBAR2	O	CLB Output X-BAR Output 2	7, 47	8, 105	6, 84	68	57	52
CLB_OUTPUTXBAR3	O	CLB Output X-BAR Output 3	23, 42, 44	94, 102, 106	81, 85	57, 65, 69	54	49
CLB_OUTPUTXBAR4	O	CLB Output X-BAR Output 4	10, 40, 43, 45	91, 101, 110, 122	80, 93	54, 64, 73, 76	53, 63	48
CLB_OUTPUTXBAR5	O	CLB Output X-BAR Output 5	5, 8, 52	15, 95, 118	11, 74, 89	58, 74	47, 61	55
CLB_OUTPUTXBAR6	O	CLB Output X-BAR Output 6	4, 15, 53	16, 96, 124	12, 75, 95	59, 78	48	43
CLB_OUTPUTXBAR7	O	CLB Output X-BAR Output 7	1, 14, 56	80, 99, 125	65, 78, 96	62, 79	51	46
CLB_OUTPUTXBAR8	O	CLB Output X-BAR Output 8	0, 6, 57, 80	81, 100, 116, 126	66, 79, 97	63, 80	52, 64	1, 47
EPWM1_A	O	ePWM-1 Output A	0, 4, 30, 77, 80, 224	21, 96, 100, 113, 116, 127	17, 75, 79, 98	1, 13, 59, 63	9, 48, 52	7, 43, 47
EPWM1_B	O	ePWM-1 Output B	1, 5, 31, 75, 81, 226	19, 99, 111, 117, 118, 128	15, 78, 89, 99	2, 11, 62, 74	7, 51, 61	46, 55
EPWM2_A	O	ePWM-2 Output A	2, 6, 7, 41, 79, 230	50, 98, 103, 105, 115, 126	40, 77, 82, 84, 97	29, 61, 66, 68, 80	25, 50, 55, 57, 64	1, 23, 45, 50, 52
EPWM2_B	O	ePWM-2 Output B	3, 7, 40, 74, 78, 227, 228	18, 48, 86, 97, 101, 105, 114	14, 38, 76, 80, 84	10, 28, 60, 64, 68	6, 24, 49, 53, 57	22, 44, 48, 52
EPWM3_A	O	ePWM-3 Output A	0, 4, 14, 68, 78, 80, 227	48, 72, 96, 100, 114, 116, 125	38, 75, 79, 96	28, 59, 63, 79	24, 48, 52	22, 43, 47
EPWM3_B	O	ePWM-3 Output B	1, 5, 15, 69, 79, 230	50, 73, 99, 115, 118, 124	40, 78, 89, 95	29, 62, 74, 78	25, 51, 61	23, 46, 55
EPWM4_A	O	ePWM-4 Output A	2, 6, 22, 76, 242	20, 98, 104, 112, 126	16, 77, 83, 97	12, 61, 67, 80	8, 50, 56, 64	1, 6, 45, 51
EPWM4_B	O	ePWM-4 Output B	3, 7, 23, 71	83, 97, 102, 105	76, 81, 84	60, 65, 68	49, 54, 57	44, 49, 52
EPWM5_A	O	ePWM-5 Output A	8, 37, 72	76, 84, 95	61, 74	46, 58	37, 47	34
EPWM5_B	O	ePWM-5 Output B	9, 35, 73	78, 85, 119	63, 90	48, 75	39, 62	36, 56
EPWM6_A	O	ePWM-6 Output A	10, 17, 18, 72, 75, 226	19, 67, 84, 87, 111, 122	15, 55, 68, 93	11, 40, 50, 76	7, 34, 41, 63	31, 38
EPWM6_B	O	ePWM-6 Output B	11, 19, 69	64, 73, 88	52, 69	37, 51	31, 42	28, 39
EPWM7_A	O	ePWM-7 Output A	12, 28, 41, 64, 68, 236	2, 49, 56, 63, 72, 103	1, 39, 51, 82	4, 28, 36, 66	2, 24, 30, 55	3, 22, 27, 50
EPWM7_B	O	ePWM-7 Output B	13, 29, 67, 215	1, 10, 47, 62	50, 100	3, 35	1, 29	2, 26
EPWM8_A	O	ePWM-8 Output A	14, 24, 73, 78	68, 85, 114, 125	56, 96	41, 79	35	32
EPWM8_B	O	ePWM-8 Output B	15, 32, 79	79, 115, 124	64, 95	49, 78	40	37
EPWM9_A	O	ePWM-9 Output A	16, 24, 71, 73	66, 68, 83, 85	54, 56	39, 41	33, 35	30, 32
EPWM9_B	O	ePWM-9 Output B	17, 72	67, 84	55	40	34	31
EPWM10_A	O	ePWM-10 Output A	2, 62, 211, 228	18, 43, 58, 98	14, 46, 77	10, 31, 61	6, 50	45
EPWM10_B	O	ePWM-10 Output B	1, 63, 212, 226	19, 44, 59, 99	15, 47, 78	11, 32, 62	7, 51	46
EPWM11_A	O	ePWM-11 Output A	8, 64, 213, 242	20, 45, 56, 95	16, 74	12, 58	8, 47	6
EPWM11_B	O	ePWM-11 Output B	4, 65, 214, 224	21, 46, 57, 96	17, 75	13, 59	9, 48	7, 43
EPWM12_A	O	ePWM-12 Output A	20, 23, 66, 236, 253	9, 49, 60, 102	39, 41, 48, 81	28, 33, 65	24, 27, 54	22, 24, 49
EPWM12_B	O	ePWM-12 Output B	21, 41, 60, 67, 247	10, 52, 61, 103	42, 44, 49, 82	34, 66	28, 55	25, 50
EQEP1_A	I	eQEP-1 Input A	6, 10, 20, 25, 28, 35, 40, 44, 50, 56, 64, 65, 77, 224	2, 13, 21, 56, 57, 60, 69, 78, 80, 101, 106, 113, 122, 126	1, 9, 17, 48, 57, 63, 65, 80, 85, 93, 97	4, 13, 33, 42, 48, 64, 69, 76, 80	2, 9, 27, 39, 53, 63, 64	1, 3, 7, 24, 36, 48
EQEP1_B	I	eQEP-1 Input B	7, 11, 21, 29, 37, 41, 51, 57, 66, 69, 74, 228	1, 9, 14, 18, 61, 64, 73, 76, 81, 86, 103, 105	10, 14, 49, 52, 61, 66, 82, 84, 100	3, 10, 34, 37, 46, 66, 68	1, 6, 28, 31, 37, 55, 57	2, 25, 28, 34, 50, 52

Copyright © 2026 Texas Instruments Incorporated

Table 5-3. Digital Signals (continued)

SIGNAL NAME	PIN TYPE	DESCRIPTION	GPIO	128 PDT	100 PZ	80 PNA	64 PM	56 RSH
EQEP1_INDEX	I/O	eQEP-1 Index	0, 9, 13, 17, 23, 31, 32, 43, 53, 59, 67, 72, 76, 80, 236, 242	10, 16, 20, 49, 62, 67, 79, 84, 91, 100, 102, 112, 116, 119, 121, 128	12, 16, 39, 50, 55, 64, 79, 81, 90, 92, 99	2, 12, 28, 35, 40, 49, 54, 63, 65, 75	8, 24, 29, 34, 40, 52, 54, 62	6, 22, 26, 31, 37, 47, 49, 56
EQEP1_STROBE	I/O	eQEP-1 Strobe	1, 8, 12, 16, 22, 30, 42, 52, 58, 68, 71, 75, 226	15, 19, 63, 66, 72, 82, 83, 94, 95, 99, 104, 111, 127	11, 15, 51, 54, 67, 74, 78, 83, 98	1, 11, 36, 39, 57, 58, 62, 67	7, 30, 33, 47, 51, 56	27, 30, 46, 51
EQEP2_A	I	eQEP-2 Input A	11, 14, 18, 24, 54, 69, 215	17, 47, 64, 68, 73, 87, 125	13, 52, 56, 68, 96	37, 41, 50, 79	31, 35, 41	28, 32, 38
EQEP2_B	I	eQEP-2 Input B	15, 16, 19, 25, 33, 55, 70	51, 65, 66, 69, 74, 88, 124	43, 53, 54, 57, 69, 95	38, 39, 42, 51, 78	32, 33, 42	29, 30, 39
EQEP2_INDEX	I/O	eQEP-2 Index	26, 29, 57, 71	1, 70, 81, 83	58, 66, 100	3, 43	1	2
EQEP2_STROBE	I/O	eQEP-2 Strobe	4, 27, 28, 56, 64	2, 56, 71, 80, 96	1, 59, 65, 75	4, 44, 59	2, 48	3, 43
EQEP3_A	I	eQEP-3 Input A	22, 25, 70, 211	43, 69, 74, 104	57, 83	42, 67	56	51
EQEP3_B	I	eQEP-3 Input B	9, 26, 72, 212	44, 70, 84, 119	58, 90	43, 75	62	56
EQEP3_INDEX	I/O	eQEP-3 Index	11, 18, 30, 69, 81, 214	46, 64, 73, 87, 117, 127	52, 68, 98	1, 37, 50	31, 41	28, 38
EQEP3_STROBE	I/O	eQEP-3 Strobe	10, 16, 27, 40, 71, 213	45, 66, 71, 83, 101, 122	54, 59, 80, 93	39, 44, 64, 76	33, 53, 63	30, 48
ERRORSTS	O	Error Status Output. This signal requires an external pulldown.	24, 28, 29, 55, 64, 73	1, 2, 51, 56, 68, 85	1, 43, 56, 100	3, 4, 41	1, 2, 35	2, 3, 32
FSIRXA_CLK	I	FSIRX-A Input Clock	0, 4, 13, 30, 33, 54, 57, 67, 70	10, 17, 62, 65, 74, 81, 96, 100, 127	13, 50, 53, 66, 75, 79, 98	1, 35, 38, 59, 63	29, 32, 48, 52	26, 29, 43, 47
FSIRXA_D0	I	FSIRX-A Primary Data Input	3, 12, 32, 40, 44, 52, 58, 68	15, 63, 72, 79, 82, 97, 101, 106	11, 51, 64, 67, 76, 80, 85	36, 49, 60, 64, 69	30, 40, 49, 53	27, 37, 44, 48
FSIRXA_D1	I	FSIRX-A Optional Additional Data Input	2, 11, 31, 41, 53, 56, 69	16, 64, 73, 80, 98, 103, 128	12, 52, 65, 77, 82, 99	2, 37, 61, 66	31, 50, 55	28, 45, 50
FSITXA_CLK	O	FSITX-A Output Clock	7, 10, 27, 44, 51, 78	14, 71, 105, 106, 114, 122	10, 59, 84, 85, 93	44, 68, 69, 76	57, 63	52
FSITXA_D0	O	FSITX-A Primary Data Output	6, 9, 26, 45, 49, 80	12, 70, 110, 116, 119, 126	8, 58, 90, 97	43, 73, 75, 80	62, 64	1, 56
FSITXA_D1	O	FSITX-A Optional Additional Data Output	5, 6, 8, 25, 46, 50, 81	4, 13, 69, 95, 117, 118, 126	9, 57, 74, 89, 97	6, 42, 58, 74, 80	47, 61, 64	1, 55
GPIO0	I/O	General-Purpose Input Output 0	0	100	79	63	52	47
GPIO1	I/O	General-Purpose Input Output 1	1	99	78	62	51	46
GPIO2	I/O	General-Purpose Input Output 2	2	98	77	61	50	45
GPIO3	I/O	General-Purpose Input Output 3	3	97	76	60	49	44
GPIO4	I/O	General-Purpose Input Output 4	4	96	75	59	48	43
GPIO5	I/O	General-Purpose Input Output 5	5	118	89	74	61	55
GPIO6	I/O	General-Purpose Input Output 6	6	126	97	80	64	1
GPIO7	I/O	General-Purpose Input Output 7	7	105	84	68	57	52
GPIO8	I/O	General-Purpose Input Output 8	8	95	74	58	47	
GPIO9	I/O	General-Purpose Input Output 9	9	119	90	75	62	56
GPIO10	I/O	General-Purpose Input Output 10	10	122	93	76	63	
GPIO11	I/O	General-Purpose Input Output 11	11	64	52	37	31	28
GPIO12	I/O	General-Purpose Input Output 12	12	63	51	36	30	27
GPIO13	I/O	General-Purpose Input Output 13	13	62	50	35	29	26
GPIO14	I/O	General-Purpose Input Output 14	14	125	96	79		
GPIO15	I/O	General-Purpose Input Output 15	15	124	95	78		
GPIO16	I/O	General-Purpose Input Output 16	16	66	54	39	33	30
GPIO17	I/O	General-Purpose Input Output 17	17	67	55	40	34	31
GPIO18	I/O	General-Purpose Input Output 18	18	87	68	50	41	38
GPIO19	I/O	General-Purpose Input Output 19	19	88	69	51	42	39
GPIO20	I/O	General-Purpose Input Output 20	20	60	48	33	27	24
GPIO21	I/O	General-Purpose Input Output 21	21	61	49	34	28	25
GPIO22	I/O	General-Purpose Input Output 22	22	104	83	67	56	51
GPIO23	I/O	General-Purpose Input Output 23	23	102	81	65	54	49
GPIO24	I/O	General-Purpose Input Output 24	24	68	56	41	35	32
GPIO25	I/O	General-Purpose Input Output 25	25	69	57	42		
GPIO26	I/O	General-Purpose Input Output 26	26	70	58	43		

Copyright © 2026 Texas Instruments Incorporated

Table 5-3. Digital Signals (continued)

SIGNAL NAME	PIN TYPE	DESCRIPTION	GPIO	128 PDT	100 PZ	80 PNA	64 PM	56 RSH
GPIO27	I/O	General-Purpose Input Output 27	27	71	59	44		
GPIO28	I/O	General-Purpose Input Output 28	28	2	1	4	2	3
GPIO29	I/O	General-Purpose Input Output 29	29	1	100	3	1	2
GPIO30	I/O	General-Purpose Input Output 30	30	127	98	1		
GPIO31	I/O	General-Purpose Input Output 31	31	128	99	2		
GPIO32	I/O	General-Purpose Input Output 32	32	79	64	49	40	37
GPIO33	I/O	General-Purpose Input Output 33	33	65	53	38	32	29
GPIO34	I/O	General-Purpose Input Output 34	34	123	94	77		
GPIO35	I/O	General-Purpose Input Output 35	35	78	63	48	39	36
GPIO37	I/O	General-Purpose Input Output 37	37	76	61	46	37	34
GPIO40	I/O	General-Purpose Input Output 40	40	101	80	64	53	48
GPIO41	I/O	General-Purpose Input Output 41	41	103	82	66	55	50
GPIO42	I/O	General-Purpose Input Output 42	42	94		57		
GPIO43	I/O	General-Purpose Input Output 43	43	91		54		
GPIO44	I/O	General-Purpose Input Output 44	44	106	85	69		
GPIO45	I/O	General-Purpose Input Output 45	45	110		73		
GPIO46	I/O	General-Purpose Input Output 46	46	4		6		
GPIO47	I/O	General-Purpose Input Output 47	47	8	6			
GPIO48	I/O	General-Purpose Input Output 48	48	11	7			
GPIO49	I/O	General-Purpose Input Output 49	49	12	8			
GPIO50	I/O	General-Purpose Input Output 50	50	13	9			
GPIO51	I/O	General-Purpose Input Output 51	51	14	10			
GPIO52	I/O	General-Purpose Input Output 52	52	15	11			
GPIO53	I/O	General-Purpose Input Output 53	53	16	12			
GPIO54	I/O	General-Purpose Input Output 54	54	17	13			
GPIO55	I/O	General-Purpose Input Output 55	55	51	43			
GPIO56	I/O	General-Purpose Input Output 56	56	80	65			
GPIO57	I/O	General-Purpose Input Output 57	57	81	66			
GPIO58	I/O	General-Purpose Input Output 58	58	82	67			
GPIO59	I/O	General-Purpose Input Output 59	59	121	92			
GPIO60	I/O	General-Purpose Input Output 60	60	52	44			
GPIO61	I/O	General-Purpose Input Output 61	61	120	91			
GPIO62	I/O	General-Purpose Input Output 62	62	58	46	31		
GPIO63	I/O	General-Purpose Input Output 63	63	59	47	32		
GPIO64	I/O	General-Purpose Input Output 64	64	56				
GPIO65	I/O	General-Purpose Input Output 65	65	57				
GPIO66	I/O	General-Purpose Input Output 66	66	9				
GPIO67	I/O	General-Purpose Input Output 67	67	10				
GPIO68	I/O	General-Purpose Input Output 68	68	72				
GPIO69	I/O	General-Purpose Input Output 69	69	73				
GPIO70	I/O	General-Purpose Input Output 70	70	74				
GPIO71	I/O	General-Purpose Input Output 71	71	83				
GPIO72	I/O	General-Purpose Input Output 72	72	84				
GPIO73	I/O	General-Purpose Input Output 73	73	85				
GPIO74	I/O	General-Purpose Input Output 74	74	86				
GPIO75	I/O	General-Purpose Input Output 75	75	111				
GPIO76	I/O	General-Purpose Input Output 76	76	112				
GPIO77	I/O	General-Purpose Input Output 77	77	113				
GPIO78	I/O	General-Purpose Input Output 78	78	114				
GPIO79	I/O	General-Purpose Input Output 79	79	115				
GPIO80	I/O	General-Purpose Input Output 80	80	116				
GPIO81	I/O	General-Purpose Input Output 81	81	117				
GPIO211	I/O	General-Purpose Input Output 211	211	43				
GPIO212	I/O	General-Purpose Input Output 212	212	44				

Copyright © 2026 Texas Instruments Incorporated

Table 5-3. Digital Signals (continued)

SIGNAL NAME	PIN TYPE	DESCRIPTION	GPIO	128 PDT	100 PZ	80 PNA	64 PM	56 RSH
GPIO213	I/O	General-Purpose Input Output 213	213	45				
GPIO214	I/O	General-Purpose Input Output 214	214	46				
GPIO215	I/O	General-Purpose Input Output 215	215	47				
GPIO224	I/O	General-Purpose Input Output 224	224	21	17	13	9	7
GPIO226	I/O	General-Purpose Input Output 226	226	19	15	11	7	
GPIO227	I/O	General-Purpose Input Output 227	227	48	38	28	24	22
GPIO228	I/O	General-Purpose Input Output 228	228	18	14	10	6	
GPIO230	I/O	General-Purpose Input Output 230	230	50	40	29	25	23
GPIO236	I/O	General-Purpose Input Output 236	236	49	39	28	24	22
GPIO242	I/O	General-Purpose Input Output 242	242	20	16	12	8	6
GPIO247	I/O	General-Purpose Input Output 247	247		42			
GPIO253	I/O	General-Purpose Input Output 253	253		41			
I2CA_SCL	I/OD	I2C-A Open-Drain Bidirectional Clock	1, 4, 8, 9, 18, 20, 27, 33, 37, 43, 57, 65, 70	57, 60, 65, 71, 74, 76, 81, 87, 91, 95, 96, 99, 119	48, 53, 59, 61, 66, 68, 74, 75, 78, 90	33, 38, 44, 46, 50, 54, 58, 59, 62, 75	27, 32, 37, 41, 47, 48, 51, 62	24, 29, 34, 38, 43, 46, 56
I2CA_SDA	I/OD	I2C-A Open-Drain Bidirectional Data	0, 5, 10, 19, 21, 26, 32, 35, 42, 56, 66, 79, 230	9, 50, 61, 70, 78, 79, 80, 88, 94, 100, 115, 118, 122	40, 49, 58, 63, 64, 65, 69, 79, 89, 93	29, 34, 43, 48, 49, 51, 57, 63, 74, 76	25, 28, 39, 40, 42, 52, 61, 63	23, 25, 36, 37, 39, 47, 55
I2CB_SCL	I/OD	I2C-B Open-Drain Bidirectional Clock	3, 9, 15, 29, 51, 81, 227	1, 14, 48, 97, 117, 119, 124	10, 38, 76, 90, 95, 100	3, 28, 60, 75, 78	1, 24, 49, 62	2, 22, 44, 56
I2CB_SDA	I/OD	I2C-B Open-Drain Bidirectional Data	2, 14, 28, 34, 50, 64, 80, 230	2, 13, 50, 56, 98, 116, 123, 125	1, 9, 40, 77, 94, 96	4, 29, 61, 77, 79	2, 25, 50	3, 23, 45
LINA_RX	I	LIN-A Receive	9, 11, 13, 15, 19, 23, 29, 33, 35, 41, 42, 47, 49, 55, 59, 63, 67, 69, 70, 75, 226	1, 8, 10, 12, 19, 51, 59, 62, 64, 65, 73, 74, 78, 88, 94, 102, 103, 111, 119, 121, 124	6, 8, 15, 43, 47, 50, 52, 53, 63, 69, 81, 82, 90, 92, 95, 100	3, 11, 32, 35, 37, 38, 48, 51, 57, 65, 66, 75, 78	1, 7, 29, 31, 32, 39, 42, 54, 55, 62	2, 26, 28, 29, 36, 39, 49, 50, 56
LINA_TX	O	LIN-A Transmit	10, 12, 14, 18, 22, 24, 28, 32, 37, 40, 44, 46, 54, 58, 64, 68, 73	2, 4, 17, 56, 63, 68, 72, 76, 79, 82, 85, 87, 101, 104, 106, 122, 125	1, 13, 51, 56, 61, 64, 67, 68, 80, 83, 85, 93, 96	4, 6, 36, 41, 46, 49, 50, 64, 67, 69, 76, 79	2, 30, 35, 37, 40, 41, 53, 56, 63	3, 27, 32, 34, 37, 38, 48, 51
MCANA_RX	I	CAN/CAN FD Receive	0, 5, 11, 12, 21, 30, 47, 49, 51, 57, 61, 63, 66, 68, 70, 76, 79, 80, 230, 242	8, 9, 12, 14, 20, 50, 59, 61, 63, 64, 72, 74, 81, 100, 112, 115, 116, 118, 120, 127	6, 8, 10, 16, 40, 47, 49, 51, 52, 66, 79, 89, 91, 98	1, 12, 29, 32, 34, 36, 37, 63, 74	8, 25, 28, 30, 31, 52, 61	6, 23, 25, 27, 28, 47, 55
MCANA_TX	O	CAN/CAN FD Transmit	1, 4, 7, 13, 17, 20, 31, 46, 48, 50, 56, 60, 62, 65, 67, 72, 74, 77, 81, 224, 228	4, 10, 11, 13, 18, 21, 52, 57, 58, 60, 62, 67, 80, 84, 86, 96, 99, 105, 113, 117, 128	7, 9, 14, 17, 44, 46, 48, 50, 55, 65, 75, 78, 84, 99	2, 6, 10, 13, 31, 33, 35, 40, 59, 62, 68	6, 9, 27, 29, 34, 48, 51, 57	7, 24, 26, 31, 43, 46, 52
MCANB_RX	I	CAN/CAN FD Receive	3, 18, 33, 35, 53, 59, 61	16, 65, 78, 87, 97, 120, 121	12, 53, 63, 68, 76, 91, 92	38, 48, 50, 60	32, 39, 41, 49	29, 36, 38, 44
MCANB_TX	O	CAN/CAN FD Transmit	2, 19, 32, 37, 58	76, 79, 82, 88, 98	61, 64, 67, 69, 77	46, 49, 51, 61	37, 40, 42, 50	34, 37, 39, 45
OUTPUTXBAR1	O	Output X-BAR Output 1	2, 24, 34, 58, 73, 78, 227	48, 68, 82, 85, 98, 114, 123	38, 56, 67, 77, 94	28, 41, 61, 77	24, 35, 50	22, 32, 45
OUTPUTXBAR2	O	Output X-BAR Output 2	3, 25, 37, 54, 59, 76, 242	17, 20, 69, 76, 97, 112, 121	13, 16, 57, 61, 76, 92	12, 42, 46, 60	8, 37, 49	6, 34, 44
OUTPUTXBAR3	O	Output X-BAR Output 3	4, 5, 14, 26, 48, 55, 60, 62, 77, 224	11, 21, 51, 52, 58, 70, 96, 113, 118, 125	7, 17, 43, 44, 46, 58, 75, 89, 96	13, 31, 43, 59, 74, 79	9, 48, 61	7, 43, 55
OUTPUTXBAR4	O	Output X-BAR Output 4	6, 15, 27, 33, 49, 61, 63, 70	12, 59, 65, 71, 74, 120, 124, 126	8, 47, 53, 59, 91, 95, 97	32, 38, 44, 78, 80	32, 64	1, 29
OUTPUTXBAR5	O	Output X-BAR Output 5	7, 28, 42, 64	2, 56, 94, 105	1, 84	4, 57, 68	2, 57	3, 52
OUTPUTXBAR6	O	Output X-BAR Output 6	9, 29, 43, 81	1, 91, 117, 119	90, 100	3, 54, 75	1, 62	2, 56
OUTPUTXBAR7	O	Output X-BAR Output 7	0, 11, 16, 30, 44, 69, 71, 80	64, 66, 73, 83, 100, 106, 116, 127	52, 54, 79, 85, 98	1, 37, 39, 63, 69	31, 33, 52	28, 30, 47
OUTPUTXBAR8	O	Output X-BAR Output 8	17, 31, 45, 72	67, 84, 110, 128	55, 99	2, 40, 73	34	31
PMBUSA_ALERT	I/OD	PMBus-A Open-Drain Bidirectional Alert Signal	13, 19, 27, 37, 43, 45, 67	10, 62, 71, 76, 88, 91, 110	50, 59, 61, 69	35, 44, 46, 51, 54, 73	29, 37, 42	26, 34, 39
PMBUSA_CTL	I/O	PMBus-A Control Signal - Target Input/Controller Output	12, 18, 26, 35, 42, 44, 68	63, 70, 72, 78, 87, 94, 106	51, 58, 63, 68, 85	36, 43, 48, 50, 57, 69	30, 39, 41	27, 36, 38

Copyright © 2026 Texas Instruments Incorporated

Table 5-3. Digital Signals (continued)

SIGNAL NAME	PIN TYPE	DESCRIPTION	GPIO	128 PDT	100 PZ	80 PNA	64 PM	56 RSH
PMBUSA_SCL	I/OD	PMBus-A Open-Drain Bidirectional Clock	3, 9, 15, 16, 24, 35, 41, 47, 71, 73, 79, 230	8, 50, 66, 68, 78, 83, 85, 97, 103, 115, 119, 124	6, 40, 54, 56, 63, 76, 82, 90, 95	29, 39, 41, 48, 60, 66, 75, 78	25, 33, 35, 39, 49, 55, 62	23, 30, 32, 36, 44, 50, 56
PMBUSA_SDA	I/OD	PMBus-A Open-Drain Bidirectional Data	2, 14, 17, 25, 32, 34, 40, 44, 46, 48, 62, 72	4, 11, 58, 67, 69, 79, 84, 98, 101, 106, 123, 125	7, 46, 55, 57, 64, 77, 80, 85, 94, 96	6, 31, 40, 42, 49, 61, 64, 69, 77, 79	34, 40, 50, 53	31, 37, 45, 48
SCIA_RX	I	SCI-A Receive Data	0, 3, 5, 9, 17, 25, 28, 35, 49, 63, 64, 72, 80	2, 12, 56, 59, 67, 69, 78, 84, 97, 100, 116, 118, 119	1, 8, 47, 55, 57, 63, 76, 79, 89, 90	4, 32, 40, 42, 48, 60, 63, 74, 75	2, 34, 39, 49, 52, 61, 62	3, 31, 36, 44, 47, 55, 56
SCIA_TX	O	SCI-A Transmit Data	1, 2, 7, 8, 16, 24, 29, 37, 48, 62, 71, 73	1, 11, 58, 66, 68, 76, 83, 85, 95, 98, 99, 105	7, 46, 54, 56, 61, 74, 77, 78, 84, 100	3, 31, 39, 41, 46, 58, 61, 62, 68	1, 33, 35, 37, 47, 50, 51, 57	2, 30, 32, 34, 45, 46, 52
SCIB_RX	I	SCI-B Receive Data	11, 13, 15, 19, 23, 41, 57, 67, 69	10, 62, 64, 73, 81, 88, 102, 103, 124	50, 52, 66, 69, 81, 82, 95	35, 37, 51, 65, 66, 78	29, 31, 42, 54, 55	26, 28, 39, 49, 50
SCIB_TX	O	SCI-B Transmit Data	9, 10, 12, 14, 18, 22, 40, 56, 68	63, 72, 80, 87, 101, 104, 119, 122, 125	51, 65, 68, 80, 83, 90, 93, 96	36, 50, 64, 67, 75, 76, 79	30, 41, 53, 56, 62, 63	27, 38, 48, 51, 56
SCIC_RX	I	SCI-C Receive Data	21, 33, 42, 67, 75, 81, 226	10, 19, 61, 65, 94, 111, 117	15, 49, 53	11, 34, 38, 57	7, 28, 32	25, 29
SCIC_TX	O	SCI-C Transmit Data	20, 43, 68, 77, 224	21, 60, 72, 91, 113	17, 48	13, 33, 54	9, 27	7, 24
SPIA_CLK	I/O	SPI-A Clock	3, 9, 12, 18, 56, 68, 75, 226	19, 63, 72, 80, 87, 97, 111, 119	15, 51, 65, 68, 76, 90	11, 36, 50, 60, 75	7, 30, 41, 49, 62	27, 38, 44, 56
SPIA_PICO	I/O	SPI-A Peripheral In, Controller Out (PICO)	2, 8, 11, 16, 54, 69, 71, 77, 224	17, 21, 64, 66, 73, 83, 95, 98, 113	13, 17, 52, 54, 74, 77	13, 37, 39, 58, 61	9, 31, 33, 47, 50	7, 28, 30, 45
SPIA_POCI	I/O	SPI-A Peripheral Out, Controller In (POCI)	1, 4, 10, 13, 17, 35, 55, 67, 72, 74, 228	10, 18, 51, 62, 67, 78, 84, 86, 96, 99, 122	14, 43, 50, 55, 63, 75, 78, 93	10, 35, 40, 48, 59, 62, 76	6, 29, 34, 39, 48, 51, 63	26, 31, 36, 43, 46
SPIA_PTE	I/O	SPI-A Peripheral Transmit Enable (PTE)	0, 5, 11, 19, 24, 37, 57, 69, 73, 76, 80, 242	20, 64, 68, 73, 76, 81, 85, 88, 100, 112, 116, 118	16, 52, 56, 61, 66, 69, 79, 89	12, 37, 41, 46, 51, 63, 74	8, 31, 35, 37, 42, 52, 61	6, 28, 32, 34, 39, 47, 55
SPIB_CLK	I/O	SPI-B Clock	4, 14, 22, 26, 28, 32, 52, 58, 64, 81	2, 15, 56, 70, 79, 82, 96, 104, 117, 125	1, 11, 58, 64, 67, 75, 83, 96	4, 43, 49, 59, 67, 79	2, 40, 48, 56	3, 37, 43, 51
SPIB_PICO	I/O	SPI-B Peripheral In, Controller Out (PICO)	7, 20, 24, 30, 40, 50, 56, 60, 65, 73	13, 52, 57, 60, 68, 80, 85, 101, 105, 127	9, 44, 48, 56, 65, 80, 84, 98	1, 33, 41, 64, 68	27, 35, 53, 57	24, 32, 48, 52
SPIB_POCI	I/O	SPI-B Peripheral Out, Controller In (POCI)	6, 16, 21, 25, 31, 41, 51, 57, 61, 66, 71	9, 14, 61, 66, 69, 81, 83, 103, 120, 126, 128	10, 49, 54, 57, 66, 82, 91, 97, 99	2, 34, 39, 42, 66, 80	28, 33, 55, 64	1, 25, 30, 50
SPIB_PTE	I/O	SPI-B Peripheral Transmit Enable (PTE)	15, 23, 27, 29, 33, 53, 59, 70	1, 16, 65, 71, 74, 102, 121, 124	12, 53, 59, 81, 92, 95, 100	3, 38, 44, 65, 78	1, 32, 54	2, 29, 49
SYNCOUT	O	External ePWM Synchronization Pulse	6, 52	15, 126	11, 97	80	64	1
TDI	I	JTAG Test Data Input (TDI) - TDI is the default mux selection for the pin. The internal pullup is disabled by default. The internal pullup should be enabled or an external pullup added on the board if this pin is used as JTAG TDI to avoid a floating input.	35	78	63	48	39	36
TDO	O	JTAG Test Data Output (TDO) - TDO is the default mux selection for the pin. The internal pullup is disabled by default. The TDO function will be in a tri-state condition when there is no JTAG activity, leaving this pin floating; the internal pullup should be enabled or an external pullup added on the board to avoid a floating GPIO input.	37	76	61	46	37	34
USB0DM	O	USB-0 PHY differential data	23	102	81	65	54	49
USB0DP	O	USB-0 PHY differential data	41	103	82	66	55	50
X1	I/O	Crystal oscillator input or single-ended clock input. The device initialization software must configure this pin before the crystal oscillator is enabled. To use this oscillator, a quartz crystal circuit must be connected to X1 and X2. This pin can also be used to feed a single-ended 3.3-V level clock.	19	88	69	51	42	39
X2	I/O	Crystal oscillator output.	18	87	68	50	41	38

Copyright © 2026 Texas Instruments Incorporated

Table 5-3. Digital Signals (continued)

SIGNAL NAME	PIN TYPE	DESCRIPTION	GPIO	128 PDT	100 PZ	80 PNA	64 PM	56 RSH
XCLKOUT	O	External Clock Output. This pin outputs a divided-down version of a chosen clock signal from within the device.	16, 18, 71	66, 83, 87	54, 68	39, 50	33, 41	30, 38

5.3.3 Power and Ground

Table 5-4. Power and Ground

SIGNAL NAME	PIN TYPE	DESCRIPTION	128 PDT	100 PZ	80 PNA	64 PM	56 RSH
VDD		1.2-V Digital Logic Power Pins. TI recommends placing a decoupling capacitor near each VDD pin with a minimum total capacitance of approximately 10 µF. It is also recommended that all VDD pins be externally connected to each other when internal VREG is used.	6, 54, 90, 108	4, 71, 87	8, 53, 71	4, 44, 59	5, 41, 53
VDDA		3.3-V Analog Power Pins. Place a minimum 2.2-µF decoupling capacitor on each pin.	41	34	26	22	20
VDDIO		3.3-V Digital I/O Power Pins. Place a minimum 0.1-µF decoupling capacitor on each pin.	5, 55, 89, 109	3, 70, 88	7, 52, 72	43, 60	40, 54
VREGENZ	I	Internal voltage regulator enable with internal pulldown. Tie low to VSS to enable internal VREG. Tie high to VDDIO to use an external supply.	93	73	56	46	42
VSS		Digital Ground	7, 53, 92, 107	5, 45, 72, 86	9, 30, 55, 70	5, 26, 45, 58	PAD
VSSA		Analog Ground	40	33	25	21	19

Copyright © 2026 Texas Instruments Incorporated

5.3.4 Test, JTAG, and Reset

Table 5-5. Test, JTAG, and Reset

SIGNAL NAME	PIN TYPE	DESCRIPTION	128 PDT	100 PZ	80 PNA	64 PM	56 RSH
TCK	I	JTAG test clock with internal pullup.	75	60	45	36	33
TMS	I/O	JTAG test-mode select (TMS) with internal pullup. This serial control input is clocked into the TAP controller on the rising edge of TCK. This device does not have a TRSTn pin. An external pullup resistor (recommended 2.2 kΩ) on the TMS pin to VDDIO should be placed on the board to keep JTAG in reset during normal operation.	77	62	47	38	35
XRSn	I/OD	Device Reset (in) and Watchdog Reset (out). During a power-on condition, this pin is driven low by the device. An external circuit may also drive this pin to assert a device reset. This pin is also driven low by the MCU when a watchdog reset occurs. During watchdog reset, the XRSn pin is driven low for the watchdog reset duration of 512 OSCCLK cycles. A resistor between 2.2 kΩ and 10 kΩ should be placed between XRSn and VDDIO. If a capacitor is placed between XRSn and VSS for noise filtering, it should be 100 nF or smaller. These values will allow the watchdog to properly drive the XRSn pin to VOL within 512 OSCCLK cycles when the watchdog reset is asserted. This pin is an open-drain output with an internal pullup. If this pin is driven by an external device, it should be done using an open-drain device.	3	2	5	3	4

5.4 Pin Multiplexing

Copyright © 2026 Texas Instruments Incorporated

5.4.1 GPIO Muxed Pins

Table 5-6. GPIO Muxed Pins

0, 4, 8, 12	1	2	3	5	6	7	9	10	11	13	14	15	ALT
GPIO0	EPWM1_A		OUTPUTXBAR7	SCIA_RX	I2CA_SDA	SPIA_PTE	FSIRXA_CLK	MCANA_RX	CLB_OUTPUTXBAR8	EQEP1_INDEX		EPWM3_A	
GPIO1	EPWM1_B			SCIA_TX	I2CA_SCL	SPIA_POCI	EQEP1_STROBE	MCANA_TX	CLB_OUTPUTXBAR7	EPWM10_B		EPWM3_B	
GPIO2	EPWM2_A			OUTPUTXBAR1	PMBUSA_SDA	SPIA_PICO	SCIA_TX	FSIRXA_D1	I2CB_SDA	EPWM10_A	MCANB_TX	EPWM4_A	
GPIO3	EPWM2_B	OUTPUTXBAR2		OUTPUTXBAR2	PMBUSA_SCL	SPIA_CLK	SCIA_RX	FSIRXA_D0	I2CB_SCL		MCANB_RX	EPWM4_B	
GPIO4	EPWM3_A	I2CA_SCL	MCANA_TX	OUTPUTXBAR3		SPIB_CLK	EQEP2_STROBE	FSIRXA_CLK	CLB_OUTPUTXBAR6	EPWM11_B	SPIA_POCI	EPWM1_A	
GPIO5	EPWM3_B	I2CA_SDA	OUTPUTXBAR3	MCANA_RX		SPIA_PTE	FSITXA_D1	CLB_OUTPUTXBAR5	SCIA_RX			EPWM1_B	
GPIO6	EPWM4_A	OUTPUTXBAR4	SYNCOUT	EQEP1_A		SPIB_POCI	FSITXA_D0		FSITXA_D1		CLB_OUTPUTXBAR8	EPWM2_A	
GPIO7	EPWM4_B	EPWM2_A	OUTPUTXBAR5	EQEP1_B		SPIB_PICO	FSITXA_CLK	CLB_OUTPUTXBAR2	SCIA_TX		MCANA_TX	EPWM2_B	
GPIO8	EPWM5_A		ADCSOCAO	EQEP1_STROBE	SCIA_TX	SPIA_PICO	I2CA_SCL	FSITXA_D1	CLB_OUTPUTXBAR5	EPWM11_A			
GPIO9	EPWM5_B	SCIB_TX	OUTPUTXBAR6	EQEP1_INDEX	SCIA_RX	SPIA_CLK	I2CA_SCL	FSITXA_D0	LINA_RX	PMBUSA_SCL	I2CB_SCL	EQEP3_B	
GPIO10	EPWM6_A		ADCSOCBO	EQEP1_A	SCIB_TX	SPIA_POCI	I2CA_SDA	FSITXA_CLK	LINA_TX	EQEP3_STROBE		CLB_OUTPUTXBAR4	
GPIO11	EPWM6_B	MCANA_RX	OUTPUTXBAR7	EQEP1_B	SCIB_RX	SPIA_PTE	FSIRXA_D1	LINA_RX	EQEP2_A	SPIA_PICO		EQEP3_INDEX	
GPIO12	EPWM7_A		MCANA_RX	EQEP1_STROBE	SCIB_TX	PMBUSA_CTL	FSIRXA_D0	LINA_TX	SPIA_CLK				
GPIO13	EPWM7_B		MCANA_TX	EQEP1_INDEX	SCIB_RX	PMBUSA_ALERT	FSIRXA_CLK	LINA_RX	SPIA_POCI				
GPIO14	EPWM8_A	SCIB_TX		I2CB_SDA	OUTPUTXBAR3	PMBUSA_SDA	SPIB_CLK	EQEP2_A	LINA_TX	EPWM3_A	CLB_OUTPUTXBAR7		
GPIO15	EPWM8_B	SCIB_RX		I2CB_SCL	OUTPUTXBAR4	PMBUSA_SCL	SPIB_PTE	EQEP2_B	LINA_RX	EPWM3_B	CLB_OUTPUTXBAR6		
GPIO16	SPIA_PICO		OUTPUTXBAR7	EPWM9_A	SCIA_TX		EQEP1_STROBE	PMBUSA_SCL	XCLKOUT	EQEP2_B	SPIB_POCI	EQEP3_STROBE	
GPIO17	SPIA_POCI		OUTPUTXBAR8	EPWM9_B	SCIA_RX		EQEP1_INDEX	PMBUSA_SDA	MCANA_TX		EPWM6_A		
GPIO18	SPIA_CLK	SCIB_TX	MCANB_RX	EPWM6_A	I2CA_SCL		EQEP2_A	PMBUSA_CTL	XCLKOUT	LINA_TX		EQEP3_INDEX	X2
GPIO19	SPIA_PTE	SCIB_RX	MCANB_TX	EPWM6_B	I2CA_SDA		EQEP2_B	PMBUSA_ALERT	CLB_OUTPUTXBAR1	LINA_RX			X1
GPIO20	EQEP1_A			EPWM12_A	SPIB_PICO		MCANA_TX	ADCE_EXTMUXSEL0	I2CA_SCL			SCIC_TX	
GPIO21	EQEP1_B			EPWM12_B	SPIB_POCI		MCANA_RX	ADCE_EXTMUXSEL1	I2CA_SDA			SCIC_RX	
GPIO22	EQEP1_STROBE		SCIB_TX		SPIB_CLK		LINA_TX	CLB_OUTPUTXBAR1	LINA_TX		EPWM4_A	EQEP3_A	
GPIO23	EQEP1_INDEX		SCIB_RX		SPIB_PTE		LINA_RX	CLB_OUTPUTXBAR3	LINA_RX	EPWM12_A	EPWM4_B		USB0DM

Copyright © 2026 Texas Instruments Incorporated

Table 5-6. GPIO Muxed Pins (continued)

0, 4, 8, 12	1	2	3	5	6	7	9	10	11	13	14	15	ALT
GPIO24	OUTPUTXBAR1	EQEP2_A	SPIA_PTE	EPWM8_A	SPIB_PICO		LINA_TX	PMBUSA_SCL	SCIA_TX	ERRORSTS	EPWM9_A		
GPIO25	OUTPUTXBAR2	EQEP2_B		EQEP1_A	SPIB_POCI		FSITXA_D1	PMBUSA_SDA	SCIA_RX	EQEP3_A			
GPIO26	OUTPUTXBAR3	EQEP2_INDEX		OUTPUTXBAR3	SPIB_CLK		FSITXA_D0	PMBUSA_CTL	I2CA_SDA	EQEP3_B			
GPIO27	OUTPUTXBAR4	EQEP2_STROBE		OUTPUTXBAR4	SPIB_PTE		FSITXA_CLK	PMBUSA_ALERT	I2CA_SCL	EQEP3_STROBE			
GPIO28	SCIA_RX		EPWM7_A	OUTPUTXBAR5	EQEP1_A		EQEP2_STROBE	LINA_TX	SPIB_CLK	ERRORSTS	I2CB_SDA		
GPIO29	SCIA_TX		EPWM7_B	OUTPUTXBAR6	EQEP1_B		EQEP2_INDEX	LINA_RX	SPIB_PTE	ERRORSTS	I2CB_SCL		AUXCLKIN
GPIO30			SPIB_PICO	OUTPUTXBAR7	EQEP1_STROBE		FSIRXA_CLK	MCANA_RX	EPWM1_A	EQEP3_INDEX			
GPIO31			SPIB_POCI	OUTPUTXBAR8	EQEP1_INDEX		FSIRXA_D1	MCANA_TX	EPWM1_B				
GPIO32	I2CA_SDA	EQEP1_INDEX	SPIB_CLK	EPWM8_B	LINA_TX		FSIRXA_D0	MCANB_TX	PMBUSA_SDA	ADCSOCBO			
GPIO33	I2CA_SCL		SPIB_PTE	OUTPUTXBAR4	LINA_RX		FSIRXA_CLK	MCANB_RX	EQEP2_B	ADCSOCAO		SCIC_RX	
GPIO34	OUTPUTXBAR1				PMBUSA_SDA						I2CB_SDA		
GPIO35	SCIA_RX	SPIA_POCI	I2CA_SDA	MCANB_RX	PMBUSA_SCL	LINA_RX	EQEP1_A	PMBUSA_CTL	EPWM5_B			TDI	
GPIO37	OUTPUTXBAR2	SPIA_PTE	I2CA_SCL	SCIA_TX	MCANB_TX	LINA_TX	EQEP1_B	PMBUSA_ALERT	EPWM5_A			TDO	
GPIO40	SPIB_PICO			EPWM2_B	PMBUSA_SDA	FSIRXA_D0	SCIB_TX	EQEP1_A	LINA_TX		CLB_OUTPUTXBAR4	EQEP3_STROBE	
GPIO41	EPWM7_A			EPWM2_A	PMBUSA_SCL	FSIRXA_D1	SCIB_RX	EQEP1_B	LINA_RX	EPWM12_B	SPIB_POCI		USB0DP
GPIO42		LINA_RX	OUTPUTXBAR5	PMBUSA_CTL	I2CA_SDA	SCIC_RX		EQEP1_STROBE	CLB_OUTPUTXBAR3				
GPIO43			OUTPUTXBAR6	PMBUSA_ALERT	I2CA_SCL	SCIC_TX	PMBUSA_ALERT	EQEP1_INDEX	CLB_OUTPUTXBAR4				
GPIO44			OUTPUTXBAR7	EQEP1_A	PMBUSA_SDA	FSITXA_CLK	PMBUSA_CTL	CLB_OUTPUTXBAR3	FSIRXA_D0		LINA_TX		
GPIO45			OUTPUTXBAR8			FSITXA_D0	PMBUSA_ALERT	CLB_OUTPUTXBAR4					
GPIO46			LINA_TX	MCANA_TX		FSITXA_D1	PMBUSA_SDA						
GPIO47			LINA_RX	MCANA_RX		CLB_OUTPUTXBAR2	PMBUSA_SCL						
GPIO48	OUTPUTXBAR3			MCANA_TX	SCIA_TX		PMBUSA_SDA						
GPIO49	OUTPUTXBAR4			MCANA_RX	SCIA_RX		LINA_RX				FSITXA_D0		
GPIO50	EQEP1_A			MCANA_TX	SPIB_PICO		I2CB_SDA				FSITXA_D1		
GPIO51	EQEP1_B			MCANA_RX	SPIB_POCI		I2CB_SCL				FSITXA_CLK		
GPIO52	EQEP1_STROBE			CLB_OUTPUTXBAR5	SPIB_CLK		SYNCOUT				FSIRXA_D0		

Copyright © 2026 Texas Instruments Incorporated

Table 5-6. GPIO Muxed Pins (continued)

0, 4, 8, 12	1	2	3	5	6	7	9	10	11	13	14	15	ALT
GPIO53	EQEP1_INDEX			CLB_OUTPUTXBAR6	SPIB_PTE		ADCSOCAO	MCANB_RX			FSIRXA_D1		
GPIO54	SPIA_PICO			EQEP2_A	OUTPUTXBAR2		ADCSOCBO	LINA_TX			FSIRXA_CLK		
GPIO55	SPIA_POCI			EQEP2_B	OUTPUTXBAR3		ERRORSTS	LINA_RX					
GPIO56	SPIA_CLK	CLB_OUTPUTXBAR7	MCANA_TX	EQEP2_STROBE	SCIB_TX		SPIB_PICO	I2CA_SDA	EQEP1_A		FSIRXA_D1		
GPIO57	SPIA_PTE	CLB_OUTPUTXBAR8	MCANA_RX	EQEP2_INDEX	SCIB_RX		SPIB_POCI	I2CA_SCL	EQEP1_B		FSIRXA_CLK		
GPIO58				OUTPUTXBAR1	SPIB_CLK		LINA_TX	MCANB_TX	EQEP1_STROBE		FSIRXA_D0		
GPIO59				OUTPUTXBAR2	SPIB_PTE		LINA_RX	MCANB_RX	EQEP1_INDEX				
GPIO60	EPWM12_B		MCANA_TX	OUTPUTXBAR3	SPIB_PICO								
GPIO61			MCANA_RX	OUTPUTXBAR4	SPIB_POCI						MCANB_RX		
GPIO62	EPWM10_A	OUTPUTXBAR3		MCANA_TX	SCIA_TX		PMBUSA_SDA						
GPIO63	EPWM10_B	OUTPUTXBAR4		MCANA_RX	SCIA_RX		LINA_RX						
GPIO64	SCIA_RX	EPWM11_A	EPWM7_A	OUTPUTXBAR5	EQEP1_A		EQEP2_STROBE	LINA_TX	SPIB_CLK	ERRORSTS	I2CB_SDA		
GPIO65	EQEP1_A	EPWM11_B			SPIB_PICO		MCANA_TX		I2CA_SCL				
GPIO66	EQEP1_B	EPWM12_A			SPIB_POCI		MCANA_RX		I2CA_SDA				
GPIO67	EPWM7_B	EPWM12_B	MCANA_TX	EQEP1_INDEX	SCIB_RX	PMBUSA_ALERT	FSIRXA_CLK	LINA_RX	SPIA_POCI			SCIC_RX	
GPIO68	EPWM7_A	EPWM3_A	MCANA_RX	EQEP1_STROBE	SCIB_TX	PMBUSA_CTL	FSIRXA_D0	LINA_TX	SPIA_CLK			SCIC_TX	
GPIO69	EPWM6_B	EPWM3_B	OUTPUTXBAR7	EQEP1_B	SCIB_RX	SPIA_PTE	FSIRXA_D1	LINA_RX	EQEP2_A	SPIA_PICO		EQEP3_INDEX	
GPIO70	I2CA_SCL		SPIB_PTE	OUTPUTXBAR4	LINA_RX		FSIRXA_CLK	MCANA_RX	EQEP2_B	ADCSOCAO		EQEP3_A	
GPIO71	SPIA_PICO	EPWM4_B	OUTPUTXBAR7	EPWM9_A	SCIA_TX		EQEP1_STROBE	PMBUSA_SCL	XCLKOUT	EQEP2_INDEX	SPIB_POCI	EQEP3_STROBE	
GPIO72	SPIA_POCI	EPWM5_A	OUTPUTXBAR8	EPWM9_B	SCIA_RX		EQEP1_INDEX	PMBUSA_SDA	MCANA_TX		EPWM6_A	EQEP3_B	
GPIO73	OUTPUTXBAR1	EPWM5_B	SPIA_PTE	EPWM8_A	SPIB_PICO		LINA_TX	PMBUSA_SCL	SCIA_TX	ERRORSTS	EPWM9_A		
GPIO74	EPWM2_B		ADCSOCAO	MCANA_TX	SPIA_POCI				EQEP1_B				
GPIO75	EPWM1_B		LINA_RX	EPWM6_A	SPIA_CLK				EQEP1_STROBE		SCIC_RX		
GPIO76	EPWM4_A			OUTPUTXBAR2	SPIA_PTE			MCANA_RX	EQEP1_INDEX				
GPIO77	EPWM1_A			OUTPUTXBAR3	SPIA_PICO			MCANA_TX	EQEP1_A		SCIC_TX		
GPIO78		EPWM8_A	EPWM3_A	OUTPUTXBAR1	EPWM2_B		FSITXA_CLK						
GPIO79		EPWM8_B	EPWM3_B	MCANA_RX	EPWM2_A	I2CA_SDA	PMBUSA_SCL						
GPIO80	EPWM1_A		OUTPUTXBAR7	SCIA_RX	I2CB_SDA	SPIA_PTE	FSITXA_D0	MCANA_RX	CLB_OUTPUTXBAR8	EQEP1_INDEX		EPWM3_A	
GPIO81	EPWM1_B	OUTPUTXBAR6	SCIC_RX	SPIB_CLK	I2CB_SCL		FSITXA_D1	MCANA_TX	EQEP3_INDEX				
GPIO211	EPWM10_A			EQEP3_A									
GPIO212	EPWM10_B			EQEP3_B									

Copyright © 2026 Texas Instruments Incorporated

Table 5-6. GPIO Muxed Pins (continued)

0, 4, 8, 12	1	2	3	5	6	7	9	10	11	13	14	15	ALT
GPIO213	EPWM11_A			EQEP3_STROBE									
GPIO214	EPWM11_B			EQEP3_INDEX									
GPIO215	EPWM7_B			EQEP2_A									
GPIO224	EPWM11_B			OUTPUTXBAR3	SPIA_PICO		EPWM1_A	MCANA_TX	EQEP1_A	ADCE_EXTMUXSEL3	SCIC_TX		
GPIO226	EPWM10_B		LINA_RX	EPWM6_A	SPIA_CLK		EPWM1_B		EQEP1_STROBE	ADCE_EXTMUXSEL1	SCIC_RX		
GPIO227	I2CB_SCL		EPWM3_A	OUTPUTXBAR1	EPWM2_B								
GPIO228	EPWM10_A		ADCSOCAO	MCANA_TX	SPIA_POCI		EPWM2_B		EQEP1_B	ADCE_EXTMUXSEL0			
GPIO230	I2CB_SDA		EPWM3_B	MCANA_RX	EPWM2_A	I2CA_SDA	PMBUSA_SCL						
GPIO236	EPWM7_A			EQEP1_INDEX			EPWM12_A						
GPIO242	EPWM11_A			OUTPUTXBAR2	SPIA_PTE		EPWM4_A	MCANA_RX	EQEP1_INDEX	ADCE_EXTMUXSEL2			
GPIO247	EPWM12_B												
GPIO253	EPWM12_A												
AIO208													
AIO209													
AIO210													
AIO225													
AIO229													
AIO231													
AIO232													
AIO233													
AIO234													
AIO235													
AIO237													
AIO238													
AIO239													
AIO240													
AIO241													
AIO244													
AIO245													
AIO248													
AIO249													

Copyright © 2026 Texas Instruments Incorporated

Table 5-6. GPIO Muxed Pins (continued)

0, 4, 8, 12	1	2	3	5	6	7	9	10	11	13	14	15	ALT
AIO251													
AIO252													

Copyright © 2026 Texas Instruments Incorporated

5.4.2 Digital Inputs on ADC Pins (AIOs)

Some GPIOs are multiplexed with analog pins and only have digital input functionality. These are also referred to as AIOs. Pins with only an AIO option on this port can only function in input mode. See the device data sheet for list of AIO signals. By default, these pins function as analog pins and the GPIOs are in a high-impedance state. The GPyAMSEL register is used to configure these pins for digital or analog operation.

Note

If digital signals with sharp edges (high dv/dt) are connected to the AIOs, cross-talk can occur with adjacent analog signals. Therefore, limit the edge rate of signals connected to AIOs if adjacent channels are being used for analog functions.

5.4.3 Digital Inputs and Outputs on ADC Pins (AGPIOs)

Some GPIOs are multiplexed with analog pins and have digital input and output functionality. These are also referred to as AGPIOs. Unlike AIOs, AGPIOs have full input and output capability. By default, the AGPIOs are not connected and must be configured. Table 5-7 shows how to configure the AGPIOs. To enable the analog functionality, set the register AGPIOCTRLx from analog subsystem. To enable the digital functionality, set the register GPxAMSEL from the *General-Purpose Input/Output (GPIO)* chapter.

Table 5-7. AGPIO Configuration

AGPIOCTRLx.GPIOy (Default = 0)	GPxAMSEL.GPIOy (Default = 1)	Pin Connected To:	
		ADC	GPIOy
0	0	-	Yes
0	**1**	**-** (1)	**-** (1)
1	0	-	Yes
1	1	Yes	-

(1) By default there are no signals connected to AGPIO pins. One of the other rows in the table must be chosen for pin functionality.

Note

If digital signals with sharp edges (high dv/dt) are connected to the AGPIOs, cross-talk can occur with adjacent analog signals. The user must therefore limit the edge rate of signals connected to AGPIOs, if adjacent channels are being used for analog functions.

Copyright © 2026 Texas Instruments Incorporated

The general schematic of analog subsystem with AGPIO implementation is illustrated in Figure 5-6. The combinations of use cases for a specific analog input pin need special consideration are shown in Table 5-8. The AGPIO analog pin path contains an extra series switch of 53Ω. This creates a low capacitance isolated node shared by the ADC and CMPSS Comparator as shown in Figure 5-6. This node can be disturbed when the ADC samples the channel (depending on the prior voltage stored on the ADC sample and hold capacitor), and this disturbance can cause a false CMPSS event of up to 50ns. As shown in Table 5-8, special considerations or workarounds need to be used for the combination of CMPSS Input, ADC Sampling, and AGPIO. To accommodate this potential disturbance the following workarounds can be implemented:

1. Use a different pin (that is AIO pin type) for analog channels which need both ADC and CMPSS together.
2. Use the CMPSS Digital Filter with a setting of 50ns or greater, which filters the temporary disturbance.
3. Precondition the sample and hold capacitor of the ADC so the disturbance does not cause a false trip. For example, perform a dummy read of a 3.3V connection from a different channel on the ADC immediately before the impacted channel is read so the disturbance is in the positive direction, away from the false trip. The opposite dummy read of a 0V signal can be used if the false trip is inverted in polarity.

Table 5-8. The Combinations of Use Cases for a Specific Analog Input Pin

Function Used on a Specific Analog Pin	Component Used				
CMPSS Comparator Input	Yes	-	Yes	-	Yes
ADC Sampling	Yes	Yes	-	Yes	Yes
AGPIO Analog Pin Type	Yes	Yes	Yes	-	-
AIO Analog Pin Type	-	-	-	Yes	Yes
Result	**Workaround needed**	**No special analysis or workaround needed**			

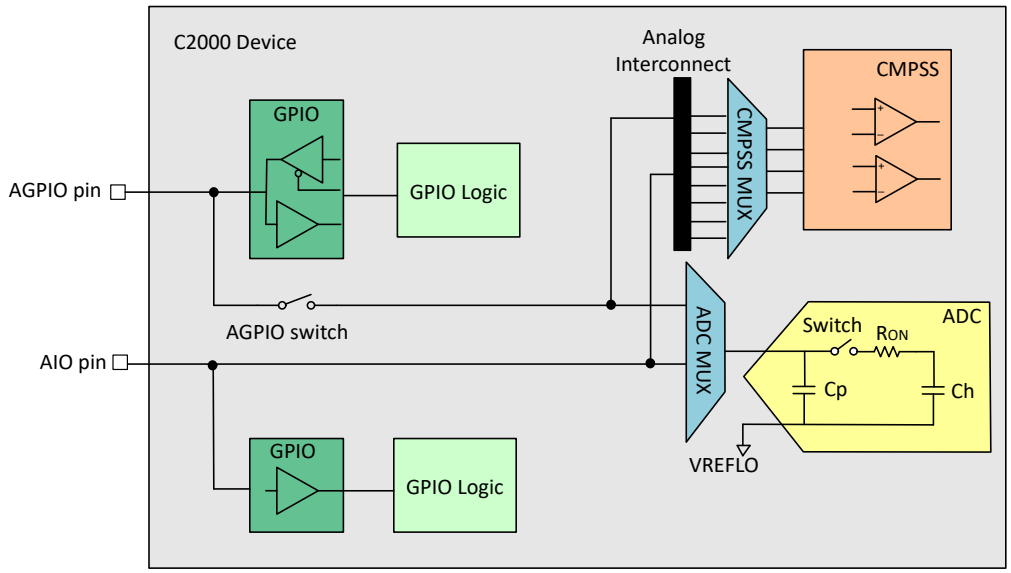

Figure 5-6. Analog Subsystem Block Diagram with AGPIO Implementation

Copyright © 2026 Texas Instruments Incorporated

5.4.4 GPIO Input X-BAR

The Input X-BAR is used to route signals from a GPIO to many different IP blocks such as the ADCs, eCAPs, ePWMs, and external interrupts (see the *Input X-BAR* figure). The *Input X-BAR Destinations* table lists the input X-BAR destinations. For details on configuring the Input X-BAR, see the Crossbar (X-BAR) chapter of the *TMS320F28P55x Real-Time Microcontrollers Technical Reference Manual*.

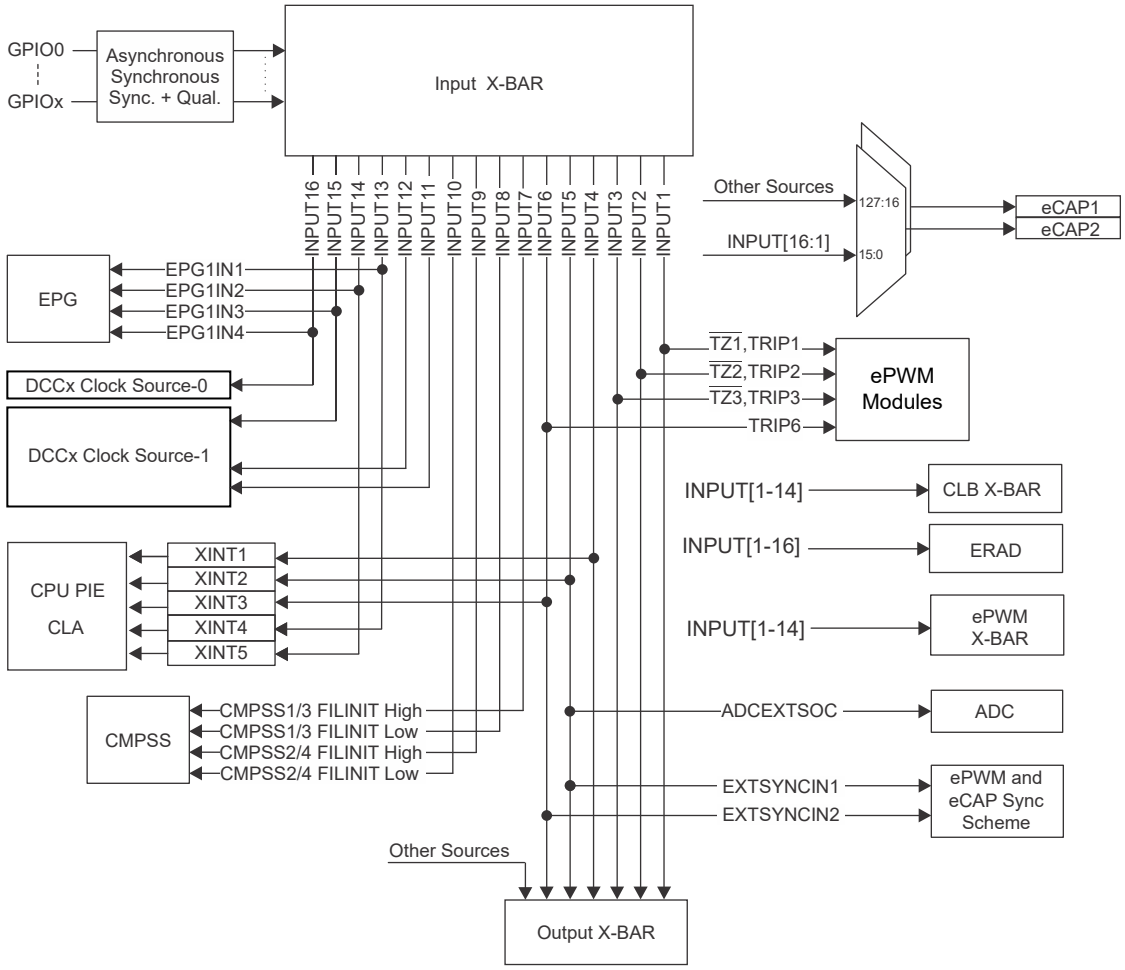

Figure 5-7. Input X-BAR

Table 5-9. Input X-BAR Destinations

INPUT	ECAP	EPWM XBAR	CLB XBAR	OUTPUT XBAR	EPWM TRIP	ERAD	CPU XINT	ADC SOC	EPWM / ECAP SYNC	CMPSS	DCCx	EPG
1	Yes	Yes	Yes	Yes	TZ1, TRIP1	Yes	-	-	-	-	-	-
2	Yes	Yes	Yes	Yes	TZ2, TRIP2	Yes	-	-	-	-	-	-
3	Yes	Yes	Yes	Yes	TZ3, TRIP3	Yes	-	-	-	-	-	-
4	Yes	Yes	Yes	Yes	-	Yes	XINT1	-	-	-	-	-
5	Yes	Yes	Yes	Yes	-	Yes	XINT2	ADCEXTSOC	EXTSYNCIN1	-	-	
6	Yes	Yes	Yes	Yes	TRIP6	Yes	XINT3	-	EXTSYNCIN2	-	-	-

Table 5-9. Input X-BAR Destinations (continued)

INPUT	ECAP	EPWM XBAR	CLB XBAR	OUTPUT XBAR	EPWM TRIP	ERAD	CPU XINT	ADC SOC	EPWM / ECAP SYNC	CMPSS	DCCx	EPG
7	Yes	Yes	Yes	-	-	Yes	-	-	-	CMPSS1/3. EXT_FILTIN _H	-	-
8	Yes	Yes	Yes	-	-	Yes	-	-	-	CMPSS1/3. EXT_FILTIN _L	-	-
9	Yes	Yes	Yes	-	-	Yes	-	-	-	CMPSS2/4. EXT_FILTIN _H	-	-
10	Yes	Yes	Yes	-	-	Yes	-	-	-	CMPSS2/4. EXT_FILTIN _L	-	-
11	Yes	Yes	Yes	-	-	Yes		-	-	-	CLK1	-
12	Yes	Yes	Yes	-	-	Yes	-	-	-	-	CLK1	-
13	Yes	Yes	Yes	-	-	Yes	XINT4	-	-	-	-	EPGAI N1
14	Yes	Yes	Yes	-	-	Yes	XINT5	-	-	-	-	EPGAI N2
15	Yes	-	-	-	-	Yes	-	-	-	-	CLK1	EPGAI N3
16	Yes	-	-	-	-	Yes	-	-	-	-	CLK0	EPGAI N4

Copyright © 2026 Texas Instruments Incorporated

5.4.5 GPIO Output X-BAR, CLB X-BAR, CLB Output X-BAR, and ePWM X-BAR

The Output X-BAR has eight outputs that can be selected on the GPIO mux as OUTPUTXBARx. The CLB X-BAR has eight outputs that are connected to the CLB global mux as AUXSIGx. The CLB Output X-BAR has eight outputs that can be selected on the GPIO mux as CLB_OUTPUTXBARx. The ePWM X-BAR has eight outputs that are connected to the TRIPx inputs of the ePWM. The sources for the Output X-BAR, CLB X-BAR, CLB Output X-BAR, and ePWM X-BAR are shown in Figure 5-8. For details on the Output X-BAR, CLB X-BAR, CLB Output X-BAR, and ePWM X-BAR, see the Crossbar (X-BAR) chapter of the *TMS320F28P55x Real-Time Microcontrollers Technical Reference Manual*.

Copyright © 2026 Texas Instruments Incorporated

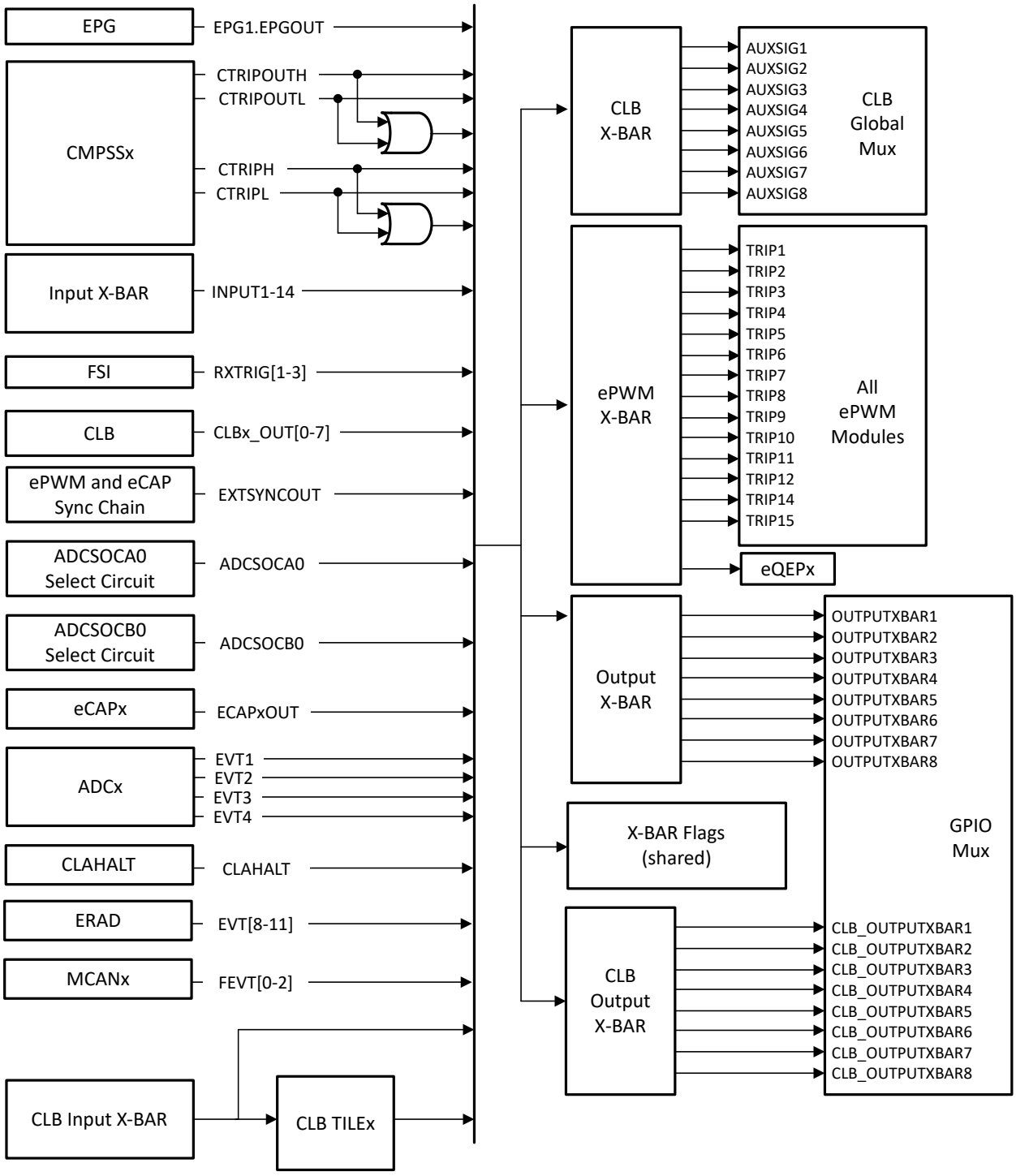

Figure 5-8. Output X-BAR, CLB X-BAR, CLB Output X-BAR, and ePWM X-BAR Sources

Copyright © 2026 Texas Instruments Incorporated

5.5 Pins With Internal Pullup and Pulldown

Some pins on the device have internal pullups or pulldowns. Table 5-10 lists the pull direction and when it is active. The pullups on GPIO pins are disabled by default and can be enabled through software. To avoid any floating unbonded inputs, the Boot ROM will enable internal pullups on GPIO pins that are not bonded out in a particular package. Other pins noted in Table 5-10 with pullups and pulldowns are always on and cannot be disabled.

Table 5-10. Pins With Internal Pullup and Pulldown

PIN	RESET (XRSn = 0)	DEVICE BOOT	APPLICATION
GPIOx	Pullup disabled	Pullup disabled(1)	Application defined
GPIO35/TDI	Pullup disabled		Application defined
GPIO37/TDO	Pullup disabled		Application defined
TCK	Pullup active		
TMS	Pullup active		
XRSn	Pullup active		
Other pins (including AIOs)	No pullup or pulldown present		

(1) Pins not bonded out in a given package will have the internal pullups enabled by the Boot ROM.

Copyright © 2026 Texas Instruments Incorporated

5.6 Connections for Unused Pins

For applications that do not need to use all functions of the device, Table 5-11 lists acceptable conditioning for any unused pins. When multiple options are listed in Table 5-11, any option is acceptable. Pins not listed in Table 5-11 must be connected according to the *Pin Configuration and Functions* section.

Table 5-11. Connections for Unused Pins

SIGNAL NAME	ACCEPTABLE PRACTICE
ANALOG	
VREFHI	Tie to VDDA (applies only if ADC is not used in the application)
VREFLO	Tie to VSSA
Analog input pins with DACx_OUT	• No Connect • Tie to VSSA through 4.7-kΩ or larger resistor
Analog input pins (except DACx_OUT)	• No Connect • Tie to VSSA • Tie to VSSA through resistor
Analog input pins (shared with GPIOs)[1]	• No connection (digital input mode with internal pullup enabled) • No connection (digital output mode with internal pullup disabled) • Pullup or pulldown resistor (any value resistor, digital input mode, and with internal pullup disabled)
DIGITAL	
GPIOx	• No connection (input mode with internal pullup enabled) • No connection (output mode with internal pullup disabled) • Pullup or pulldown resistor (any value resistor, input mode, and with internal pullup disabled)
GPIO35/TDI	When TDI mux option is selected (default), the GPIO is in Input mode. • Internal pullup enabled • External pullup resistor
GPIO37/TDO	When TDO mux option is selected (default), the GPIO is in Output mode only during JTAG activity; otherwise, it is in a tri-state condition. The pin must be biased to avoid extra current on the input buffer. • Internal pullup enabled • External pullup resistor
TCK	• No Connect • Pullup resistor
TMS	Pullup resistor
GPIO19/X1	Turn XTAL off and: • Input mode with internal pullup enabled • Input mode with external pullup or pulldown resistor • Output mode with internal pullup disabled
GPIO18/X2	Turn XTAL off and: • Input mode with internal pullup enabled • Input mode with external pullup or pulldown resistor • Output mode with internal pullup disabled

Copyright © 2026 Texas Instruments Incorporated

Table 5-11. Connections for Unused Pins (continued)

SIGNAL NAME	ACCEPTABLE PRACTICE
POWER AND GROUND	
VDD	All VDD pins must be connected per the *Signal Descriptions* section. Pins should not be used to bias any external circuits.
VDDA	If a dedicated analog supply is not used, tie to VDDIO.
VDDIO	All VDDIO pins must be connected per the *Signal Descriptions* section.
VSS	All VSS pins must be connected to board ground.
VSSA	If an analog ground is not used, tie to VSS.

(1) AGPIO pins share analog and digital functionality. The actions here only apply if these pins are also not being used for analog functions.

Copyright © 2026 Texas Instruments Incorporated

6 Specifications

6.1 Absolute Maximum Ratings

over recommended operating conditions (unless otherwise noted)(1) (2)

		MIN	MAX	UNIT
Supply voltage	VDD with respect to VSS	–0.3	1.5	V
	VDDIO with respect to VSS	–0.3	4.6	
	VDDA with respect to VSSA	–0.3	4.6	
Input voltage (7)	V_{IN} (3.3 V)	–0.3	4.6	V
	V_{IN} (5.0 V) (5)	–0.3	6.0	V
Output voltage	V_O	–0.3	4.6	V
Input clamp current - per pin (4) (6)	I_{IK} - V_{IN} < VSS/VSSA - V_{IN} > VDDIO/VDDA	–20	20	mA
Input clamp current - per pin:GPIO2/3/9/32 (4)	I_{IK} - V_{IN} < VSS	–20		mA
Input clamp current - total for all inputs (6)	$I_{IKTOTAL}$ - V_{IN} < VSS/VSSA - V_{IN} > VDDIO/VDDA	–20	20	mA
Output current	Digital output (per pin), I_{OUT}	–20	20	mA
Operating junction temperature	T_J	–40	155	°C
Storage temperature(3)	T_{stg}	–65	150	°C

(1) Operation outside the Absolute Maximum Ratings may cause permanent device damage. Absolute Maximum Ratings do not imply functional operation of the device at these or any other conditions beyond those listed under Recommended Operating Conditions. If used outside the Recommended Operating Conditions but within the Absolute Maximum Ratings, the device may not be fully functional, and this may affect device reliability, functionality, performance, and shorten the device lifetime.
(2) All voltage values are with respect to VSS, unless otherwise noted.
(3) Long-term high-temperature storage or extended use at maximum temperature conditions may result in a reduction of overall device life. For additional information, see the *Semiconductor and IC Package Thermal Metrics Application Report*.
(4) Continuous clamp current per pin is ±2mA
(5) GPIO2, GPIO3, GPIO9, GPIO32 Only
(6) Applying a V_{IN} greater than VDDIO/VDDA or less than VSS/VSSA will turn on the ESD current clamping diode causing additional current flow to the respective supply rail. If this occurs, the current must be kept within the MIN/MAX listed to prevent permanent damage to the device.
(7) Input clamp current must also be observed.

Copyright © 2026 Texas Instruments Incorporated

6.2 ESD Ratings – Commercial

				VALUE	UNIT
All F28P550Sxx devices in 128-pin PDT package					
$V_{(ESD)}$	Electrostatic discharge	Human-body model (HBM), per ANSI/ESDA/JEDEC JS-001(1)	All pins	±2000	V
			5V FS Pins: 79, 97, 98, 119	±500	
		Charged-device model (CDM), per ANSI/ESDA/JEDEC JS-002(2)	All pins	±500	
			Corner pins on 128-pin PDT: 1, 32, 33, 64, 65, 96, 97, 128	±750	
All F28P550Sxx devices in 100-pin PZ package					
$V_{(ESD)}$	Electrostatic discharge	Human-body model (HBM), per ANSI/ESDA/JEDEC JS-001(1)	All pins	±2000	V
			5V FS Pins: 64, 76, 77, 90	±500	
		Charged-device model (CDM), per ANSI/ESDA/JEDEC JS-002(2)	All pins	±500	
			Corner pins on 100-pin PZ: 1, 25, 26, 50, 51, 75, 76, 100	±750	
All F28P550Sxx devices in 80-pin PNA package					
$V_{(ESD)}$	Electrostatic discharge	Human-body model (HBM), per ANSI/ESDA/JEDEC JS-001(1)	All pins	±2000	V
			5V FS Pins: 49, 60, 61, 75	±500	
		Charged-device model (CDM), per ANSI/ESDA/JEDEC JS-002(2)	All pins	±500	
			Corner pins on 80-pin PNA: 1, 20, 21, 40, 41, 60, 61, 80	±750	
All F28P550Sxx devices in 64-pin PM package					
$V_{(ESD)}$	Electrostatic discharge	Human-body model (HBM), per ANSI/ESDA/JEDEC JS-001(1)	All pins	±2000	V
			5V FS Pins: 40, 49, 50, 62	±500	
		Charged-device model (CDM), per ANSI/ESDA/JEDEC JS-002(2)	All pins	±500	
			Corner pins on 64-pin PM: 1, 16, 17, 32, 33, 48, 49, 64	±750	
All F28P550Sxx devices in 56-pin RSH package					
$V_{(ESD)}$	Electrostatic discharge	Human-body model (HBM), per ANSI/ESDA/JEDEC JS-001(1)	All pins	±2000	V
			5V FS Pins: 37, 44, 45, 56	±500	
		Charged-device model (CDM), per ANSI/ESDA/JEDEC JS-002(2)	All pins	±500	
			Corner pins on 56-pin RSH: 1, 14, 15, 28, 29, 42, 43, 56	±750	

(1) JEDEC document JEP155 states that 500-V HBM allows safe manufacturing with a standard ESD control process.
(2) JEDEC document JEP157 states that 250-V CDM allows safe manufacturing with a standard ESD control process.

Copyright © 2026 Texas Instruments Incorporated

6.3 ESD Ratings – Automotive

				VALUE	UNIT
All F28P559Sxx-Q1 devices in 128-pin PDT package					
$V_{(ESD)}$	Electrostatic discharge	Human body model (HBM), per AEC Q100-002[1]	All pins	±2000	V
			5V FS Pins: 79, 97, 98, 119	±500	
		Charged device model (CDM), per AEC Q100-011	All pins	±500	
			Corner pins on 128-pin PDT: 1, 32, 33, 64, 65, 96, 97, 128	±750	
All F28P559Sxx-Q1 devices in 100-pin PZ package					
$V_{(ESD)}$	Electrostatic discharge	Human body model (HBM), per AEC Q100-002[1]	All pins	±2000	V
			5V FS Pins: 64, 76,77, 90	±500	
		Charged device model (CDM), per AEC Q100-011	All pins	±500	
			Corner pins on 100-pin PZ: 1, 25, 26, 50, 51, 75, 76, 100	±750	
All F28P559Sxx-Q1 devices in 80-pin PNA package					
$V_{(ESD)}$	Electrostatic discharge	Human body model (HBM), per AEC Q100-002[1]	All pins	±2000	V
			5V FS Pins: 49, 60,61, 75	±500	
		Charged device model (CDM), per AEC Q100-011	All pins	±500	
			Corner pins on 80-pin PNA: 1, 20, 21, 40, 41, 60, 61, 80	±750	
All F28P559Sxx-Q1 devices in 64-pin PM package					
$V_{(ESD)}$	Electrostatic discharge	Human body model (HBM), per AEC Q100-002[1]	All pins	±2000	V
			5V FS Pins: 40, 49,50, 62	±500	
		Charged device model (CDM), per AEC Q100-011	All pins	±500	
			Corner pins on 64-pin PM: 1, 16, 17, 32, 33, 48, 49, 64	±750	

(1) AEC Q100-002 indicates HBM stressing is done in accordance with the ANSI/ESDA/JEDEC JS-001 specification.

Copyright © 2026 Texas Instruments Incorporated

6.4 Recommended Operating Conditions

		MIN	NOM	MAX	UNIT
Device supply voltage, VDDIO and VDDA	Internal BOR enabled(3)	$V_{BOR-VDDIO}$(MAX) + V_{BOR-GB} (2)	3.3	3.63	V
	Internal BOR disabled	2.8	3.3	3.63	
Device supply voltage, VDD		1.14	1.2	1.32	V
Device ground, VSS			0		V
Analog ground, VSSA			0		V
SR_{SUPPLY}	Supply ramp rate of VDDIO, VDD, VDDA with respect to VSS.(4)				
V_{IN}	Digital input voltage(6)	VSS – 0.3		VDDIO + 0.3	V
	Digital input voltage(GPIO2, 3, 9, and 32)(5)	VSS – 0.3		5.5	V
	Analog input voltage(6)	VSSA – 0.3		VDDA + 0.3	V
Junction temperature, T_J (1)		–40		150	°C
Free-Air temperature, T_A		–40		125	°C

(1) Operation above T_J = 105°C for extended duration will reduce the lifetime of the device. See *Calculating Useful Lifetimes of Embedded Processors* for more information.
(2) See the *Power Management Module (PMM)* section.
(3) Internal BOR is enabled by default.
(4) See the Power Management Module Operating Conditions table.
(5) These pins support applied voltage prior to the device being powered
(6) Applying a VIN greater than VDDIO/VDDA or less than VSS/VSSA will turn on the ESD current clamping diode causing additional current flow to the respective supply rail. VDDIO/VDDA voltage will internally rise and could impact other electrical characteristics.

Copyright © 2026 Texas Instruments Incorporated

6.5 Power Consumption Summary

Current values listed in this section are representative for the test conditions given and not the absolute maximum possible. The actual device currents in an application will vary with application code and pin configurations.

6.5.1 System Current Consumption - VREG Enable - Internal Supply

Over recommended operating conditions (unless otherwise noted)
TYP : V_{nom}, Temperatures shown are T_J

PARAMETER		TEST CONDITIONS		MIN	TYP	MAX	UNIT
OPERATING MODE							
I_{DDIO}	VDDIO current consumption during operational usage	This is an estimation of current for a typical heavily loaded application. Actual currents will vary depending on system activity, I/O electrical loading and switching frequency. This includes Core supply current with Internal Vreg Enabled. - CPU is running from RAM - Flash is powered up - X1/X2 crystal is powered up - PLL is enabled, SYSCLK=Max Device frequency - Analog modules are powered up - Outputs are static without DC Load - Inputs are static high or low	30 ℃		92		mA
			85 ℃			105	mA
			125 ℃			115	mA
I_{DDA}	VDDA current consumption during operational usage		125 ℃			14	mA
IDLE MODE							
I_{DDIO}	VDDIO current consumption while device is in Idle mode	- CPU is in IDLE mode - Flash is powered down - PLL is Enabled, SYSCLK=Max Device Frequency, CPUCLK is gated - X1/X2 crystal is powered up - Analog Modules are powered down - Outputs are static without DC Load - Inputs are static high or low	30 ℃		30		mA
			85 ℃			36	mA
			125 ℃			54	mA
I_{DDA}	VDDA current consumption while device is in Idle mode		125 ℃			3	mA
STANDBY MODE (PLL Enabled)							
I_{DDIO}	VDDIO current consumption while device is in Standby mode	- CPU is in STANDBY mode - Flash is powered down - PLL is Enabled, SYSCLK & CPUCLK are gated - X1/X2 crystal is powered down - Analog Modules are powered down - Outputs are static without DC Load - Inputs are static high or low	30 ℃		8		mA
			85 ℃			14	mA
			125 ℃			29	mA
I_{DDA}	VDDA current consumption while device is in Standby mode		125 ℃			3	mA

Copyright © 2026 Texas Instruments Incorporated

6.5.1 System Current Consumption - VREG Enable - Internal Supply (continued)

Over recommended operating conditions (unless otherwise noted)
TYP : V_{nom}, Temperatures shown are T_J

PARAMETER		TEST CONDITIONS		MIN	TYP	MAX	UNIT
STANDBY MODE (PLL Disabled)							
I_{DDIO}	VDDIO current consumption while device is in Standby mode	- CPU is in STANDBY mode - Flash is powered down - PLL is Disabled, SYSCLK & CPUCLK are gated - X1/X2 crystal is powered down - Analog Modules are powered down - Outputs are static without DC Load - Inputs are static high or low	30 ℃		4		mA
			85 ℃			10	mA
			125 ℃			24	mA
I_{DDA}	VDDA current consumption while device is in Standby mode		125 ℃			3	mA
HALT MODE							
I_{DDIO}	VDDIO current consumption while device is in Halt mode	- CPU is in HALT mode - Flash is powered down - PLL is Disabled, SYSCLK and CPUCLK are gated - X1/X2 crystal is powered down - Analog Modules are powered down - Outputs are static without DC Load - Inputs are static high or low	30 ℃		4		mA
			85 ℃			10	mA
			125 ℃			25	mA
I_{DDA}	VDDA current consumption while device is in Halt mode		125 ℃			3	mA
FLASH ERASE/PROGRAM							
I_{DDIO}	VDDIO current consumption during Erase/Program cycle(1)	- CPU is running from RAM - Flash going through continuous Program/Erase operation - PLL is enabled, SYSCLK at maximum device frequency - Peripheral clocks are turned OFF. - X1/X2 crystal is powered up - Analog is powered down - Outputs are static without DC Load - Inputs are static high or low			91	128	mA
I_{DDA}	VDDA current consumption during Erase/Program cycle				0.1	8	mA
RESET MODE							
I_{DDIO}	VDDIO current consumption while reset is active(2)	Device is under Reset	30 ℃		10		mA
			85 ℃		13		mA
			125 ℃		20		mA
I_{DDA}	VDDA current consumption while reset is active(2)		125 ℃		0.01		mA

(1) Brownout events during flash programming can corrupt flash data and permanently lock the device. Programming environments using alternate power sources (such as a USB programmer) must be capable of supplying the rated current for the device and other system components with sufficient margin to avoid supply brownout conditions.
(2) This is the current consumption while reset is active, that is XRSn is low.

Copyright © 2026 Texas Instruments Incorporated

6.5.2 System Current Consumption - VREG Disable - External Supply

Over recommended operating conditions (unless otherwise noted)
TYP : V_{nom}, Temperatures shown are T_J

PARAMETER		TEST CONDITIONS		MIN	TYP	MAX	UNIT
OPERATING MODE							
I_{DD}	VDD current consumption during operational usage	This is an estimation of current for a typical heavily loaded application. Actual currents will vary depending on system activity, I/O electrical loading and switching frequency. This includes Core supply current with Internal Vreg Enabled. - CPU is running from RAM - Flash is powered up - X1/X2 crystal is powered up - PLL is enabled, SYSCLK=Max Device frequency - Analog modules are powered up - Outputs are static without DC Load - Inputs are static high or low	30 ℃		85		mA
			85 ℃			96	mA
			125 ℃			115	mA
I_{DDIO}	VDDIO current consumption during operational usage		30 ℃		13		mA
			85 ℃			17	mA
			125 ℃			18	mA
I_{DDA}	VDDA current consumption during operational usage		125 ℃			14	mA
IDLE MODE							
I_{DD}	VDD current consumption while device is in Idle mode	- CPU is in IDLE mode - Flash is powered down - PLL is Enabled, SYSCLK=Max Device Frequency, CPUCLK is gated - X1/X2 crystal is powered up - Analog Modules are powered down - Outputs are static without DC Load - Inputs are static high or low	30 ℃		28		mA
			85 ℃			35	mA
			125 ℃			54	mA
I_{DDIO}	VDDIO current consumption while device is in Idle mode		30 ℃		3		mA
			85 ℃			6	mA
			125 ℃			7	mA
I_{DDA}	VDDA current consumption while device is in Idle mode		125 ℃			3	mA
STANDBY MODE (PLL Enabled)							
I_{DD}	VDD current consumption while device is in Standby mode	- CPU is in STANDBY mode - Flash is powered down - PLL is Enabled, SYSCLK & CPUCLK are gated - X1/X2 crystal is powered down - Analog Modules are powered down - Outputs are static without DC Load - Inputs are static high or low	30 ℃		6		mA
			85 ℃			12	mA
			125 ℃			32	mA
I_{DDIO}	VDDIO current consumption while device is in Standby mode		30 ℃		3		mA
			85 ℃			6	mA
			125 ℃			7	mA
I_{DDA}	VDDA current consumption while device is in Standby mode		30 ℃		1		mA
			85 ℃			2	mA
			125 ℃			3	mA

Copyright © 2026 Texas Instruments Incorporated

6.5.2 System Current Consumption - VREG Disable - External Supply (continued)

Over recommended operating conditions (unless otherwise noted)
TYP : V_{nom}, Temperatures shown are T_J

PARAMETER		TEST CONDITIONS		MIN	TYP	MAX	UNIT
STANDBY MODE (PLL Disabled)							
I_{DD}	VDD current consumption while device is in Standby mode	- CPU is in STANDBY mode - Flash is powered down - PLL is Disabled, SYSCLK & CPUCLK are gated - X1/X2 crystal is powered down - Analog Modules are powered down - Outputs are static without DC Load - Inputs are static high or low	30 ℃		3		mA
			85 ℃			8	mA
			125 ℃			29	mA
I_{DDIO}	VDDIO current consumption while device is in Standby mode		30 ℃		2		mA
			85 ℃			5	mA
			125 ℃			6	mA
I_{DDA}	VDDA current consumption while device is in Standby mode		125 ℃			8	mA
I_{DDA}	VDDA current consumption while device is in Standby mode	- CPU is in STANDBY mode - Flash is powered down - PLL is Disabled, SYSCLK & CPUCLK are gated - X1/X2 crystal is powered down - Analog Modules are powered down - Outputs are static without DC Load - Inputs are static high or low	30 ℃		1		mA
I_{DDA}	VDDA current consumption while device is in Standby mode	- CPU is in STANDBY mode - Flash is powered down - PLL is Disabled, SYSCLK & CPUCLK are gated - X1/X2 crystal is powered down - Analog Modules are powered down - Outputs are static without DC Load - Inputs are static high or low	85 ℃			3	mA
HALT MODE							
I_{DD}	VDD current consumption while device is in Halt mode	- CPU is in HALT mode - Flash is powered down - PLL is Disabled, SYSCLK and CPUCLK are gated - X1/X2 crystal is powered down - Analog Modules are powered down - Outputs are static without DC Load - Inputs are static high or low	30 ℃		2		mA
			85 ℃			8	mA
			125 ℃			29	mA
I_{DDIO}	VDDIO current consumption while device is in Halt mode		30 ℃		2		mA
			85 ℃			5	mA
			125 ℃			6	mA
I_{DDA}	VDDA current consumption while device is in Halt mode		125 ℃			3	mA
FLASH ERASE/PROGRAM							

Copyright © 2026 Texas Instruments Incorporated

6.5.2 System Current Consumption - VREG Disable - External Supply (continued)

Over recommended operating conditions (unless otherwise noted)
TYP : V_{nom}, Temperatures shown are T_J

PARAMETER		TEST CONDITIONS		MIN	TYP	MAX	UNIT
I_{DD}	VDD current consumption during Erase/Program cycle[1]	- CPU is running from RAM - Flash going through continuous Program/Erase operation - PLL is enabled, SYSCLK at maximum system frequency. - Peripheral clocks are turned OFF. - X1/X2 crystal is powered up - Analog is powered down - Outputs are static without DC Load - Inputs are static high or low			80	108	mA
I_{DDIO}	VDDIO current consumption during Erase/Program cycle[1]				11	20	mA
I_{DDA}	VDDA current consumption during Erase/Program cycle				0.1	8	mA

Copyright © 2026 Texas Instruments Incorporated

6.5.2 System Current Consumption - VREG Disable - External Supply (continued)

Over recommended operating conditions (unless otherwise noted)
TYP : V_{nom}, Temperatures shown are T_J

PARAMETER		TEST CONDITIONS		MIN	TYP	MAX	UNIT
RESET MODE							
I_{DD}	VDD current consumption while reset is active(2)	Device is under Reset	30 ℃		5		mA
			85 ℃		8		mA
			125 ℃		15		mA
I_{DDIO}	VDDIO current consumption while reset is active(2)		30 ℃		5		mA
			85 ℃		5		mA
			125 ℃		5		mA
I_{DDA}	VDDA current consumption while reset is active(2)		125 ℃		0.01		mA

(1) Brownout events during flash programming can corrupt flash data and permanently lock the device. Programming environments using alternate power sources (such as a USB programmer) must be capable of supplying the rated current for the device and other system components with sufficient margin to avoid supply brownout conditions.
(2) This is the current consumption while reset is active, that is XRSn is low.

Copyright © 2026 Texas Instruments Incorporated

6.5.3 Operating Mode Test Description

The *System Current Consumption - VREG Enable - Internal Supply* table, *System Current Consumption - VREG Disable - External Supply* table, and Section 6.5.4 list the current consumption values for the operational mode of the device. The operational mode provides an estimation of what an application might encounter. The test condition for these measurements has the following properties:

- Code is executing from RAM.
- FLASH is read and kept in active state.
- No external components are driven by I/O pins.
- All peripherals have clocks enabled.
- The CPU is actively executing code.
- All analog peripherals are powered up. ADCs and DACs are periodically converting.

6.5.4 Reducing Current Consumption

The F28P55x devices provide some methods to reduce the device current consumption:

- One of the two low-power modes—IDLE or STANDBY—could be entered during idle periods in the application.
- The flash module may be powered down if the code is run from RAM.
- Disable the pullups on pins that assume an output function.
- Each peripheral has an individual clock-enable bit (PCLKCRx). Reduced current consumption may be achieved by turning off the clock to any peripheral that is not used in a given application. The *Typical Current Reduction per Disabled Peripheral* table lists the typical current reduction that may be achieved by disabling the clocks using the PCLKCRx register.
- To realize the lowest VDDA current consumption in an LPM, see the Analog-to-Digital Converter (ADC) chapter of the *TMS320F28P55x Real-Time Microcontrollers Technical Reference Manual* to ensure each module is powered down as well.

6.5.4.1 Typical Current Reduction per Disabled Peripheral

For peripherals with multiple instances, the current quoted is for all modules combined.

PERIPHERAL	I_{DDIO} CURRENT REDUCTION (mA)
ADC(1)	1.0
CLA	0.56
CLB	1.41
CMPSS(1)	0.31
CPU TIMER	0.06
GPDAC	0.12
MCAN	1.01
DCC	0.08
eCAP	0.12
ERAD	1.56
EPG	0.32
ePWM (for 1 ePWM)	0.95
eQEP	0.18
SCI	0.50
I2C	0.51
SPI	0.11
FSI RX	0.34
FSI TX	0.27
PMBUS	0.28

(1) This current represents the current drawn by the digital portion of the each module.

Copyright © 2026 Texas Instruments Incorporated

6.6 Electrical Characteristics

over recommended operating conditions (unless otherwise noted)

PARAMETER			TEST CONDITIONS	MIN	TYP	MAX	UNIT
Digital and Analog IO							
V_{OH}	High-level output voltage		I_{OH} = I_{OH} MIN	VDDIO * 0.8			V
			I_{OH} = –100 µA	VDDIO – 0.2			
V_{OL}	Low-level output voltage		I_{OL} = I_{OL} MAX			0.4	V
			I_{OL} = 100 µA			0.2	
I_{OH}	High-level output source current for all output pins			–4			mA
I_{OL}	Low-level output sink current for all output pins					4	mA
	Low-level output sink current for GPIO2/3/9/32	IO_DRVSEL:DRVSELGPIOx = 0				4	mA
		IO_DRVSEL:DRVSELGPIOx = 1				12	mA
R_{OH}	High-level output impedance for all output pins		VOH=VDDS-0.4V	50	66	96	Ω
R_{OL}	Low-level output impedance for all output pins		VOL=0.4V	48	60	84	Ω
	Low-level output impedance for GPIO2/3/9/32	IO_DRVSEL:DRVSELGPIOx = 0		48	60	84	Ω
		IO_DRVSEL:DRVSELGPIOx = 1		15	21	33	Ω
V_{IH}	High-level input voltage			2.0			V
V_{IH}	High-level input voltage - GPIO 23/41			2.21			V
V_{IH}	High-level input voltage - GPIO2/3/9/32	IO_MODSEL:MODSELGPIOx = 0		0.7*VDDIO			V
V_{IH}	High-level input voltage - GPIO2/3/9/32	IO_MODSEL:MODSELGPIOx = 1		1.35			V
V_{IL}	Low-level input voltage					0.8	V
	Low-level input voltage - GPIO2/3/9/32	IO_MODSEL:MODSELGPIOx = 0				0.3*VDDIO	V
		IO_MODSEL:MODSELGPIOx = 1				0.8	V
$V_{HYSTERESIS}$	Input hysteresis (AIO)			115			mV
	Input hysteresis (GPIO)			115			
$I_{PULLDOWN}$	Input current	Pins with pulldown	VDDIO = 3.3 V V_{IN} = VDDIO		120		µA
I_{PULLUP}	Input current	Digital inputs with pullup enabled(1)	VDDIO = 3.3 V V_{IN} = 0 V		160		µA
$R_{PULLDOWN}$	Weak pulldown resistance			22	31	62	kΩ
R_{PULLUP}	Weak pullup resistance			19	29	54	kΩ
		GPIO2/3/9/32		20	31	65	kΩ

Copyright © 2026 Texas Instruments Incorporated

6.6 Electrical Characteristics (continued)

over recommended operating conditions (unless otherwise noted)

PARAMETER			TEST CONDITIONS	MIN	TYP	MAX	UNIT
I_{LEAK}	Pin leakage	Digital inputs	Pullups and outputs disabled 0 V ≤ V_{IN} ≤ VDDIO			0.150	µA
	Pin leakage (Device Powered) See the *Special Considerations for 5V Fail-Safe Pins* Section	Digital inputs (GPIO2/3/9/32)	Pullups and outputs disabled 0 V ≤ V_{IN} ≤ 3.3V VDDIO = 3.3V			0.150	
			Pullups and outputs disabled 3.3V < V_{IN} ≤ 4.0V VDDIO = 3.3V		30	50	
			Pullups and outputs disabled 4.0V < V_{IN} ≤ 5.5V VDDIO = 3.3V		8	19	
	Pin leakage(Device Unpowered)		Pullups and outputs disabled 0 V ≤ V_{IN} ≤ 5.5V VDDIO = 0V		1	5	
	Pin leakage	Analog pins	Analog drivers disabled 0 V ≤ V_{IN} ≤ VDDA			0.150	
C_I	Input capacitance	Digital inputs			2		pF
		Analog pins(2)					
VREG and BOR							
VREG, POR, BOR(3)							

(1) See Pins With Internal Pullup and Pulldown table for a list of pins with a pullup or pulldown.
(2) The analog pins are specified separately; see the Per-Channel Parasitic Capacitance tables that are in the ADC Input Model section.
(3) See the *Power Management Module (PMM)* section.

6.7 Special Considerations for 5V Fail-Safe Pins

GPIO2, GPIO3, GPIO9, and GPIO32 are 5V Fail-Safe (5V FS) pins on this device. This means two things:

- These pins can accept a voltage input of up to 5.5V, regardless of the supply voltage (VDDIO) level.
- These pins are also "Fail-Safe", meaning they can also have voltage applied to them prior to the device being powered.

In order to achieve the above characteristics, the construction of the input buffer of these GPIOs is different from the other GPIOs on this device. As such, there is both an additional leakage current parameter defined (unpowered leakage), and a behavioral difference for the powered leakage current when the device is powered. Figure 6-1 shows the typical leakage current profile for these pins. As shown in the figure, there is an increased leakage current present as the voltage on the pin exceeds the device's supply (VDDIO) voltage. It is during this transition phase that the highest leakage current is observed. Once the input pin voltage is greater than approximately 4V, the current settles to a nominal value through the remainder of the input voltage range.

Copyright © 2026 Texas Instruments Incorporated

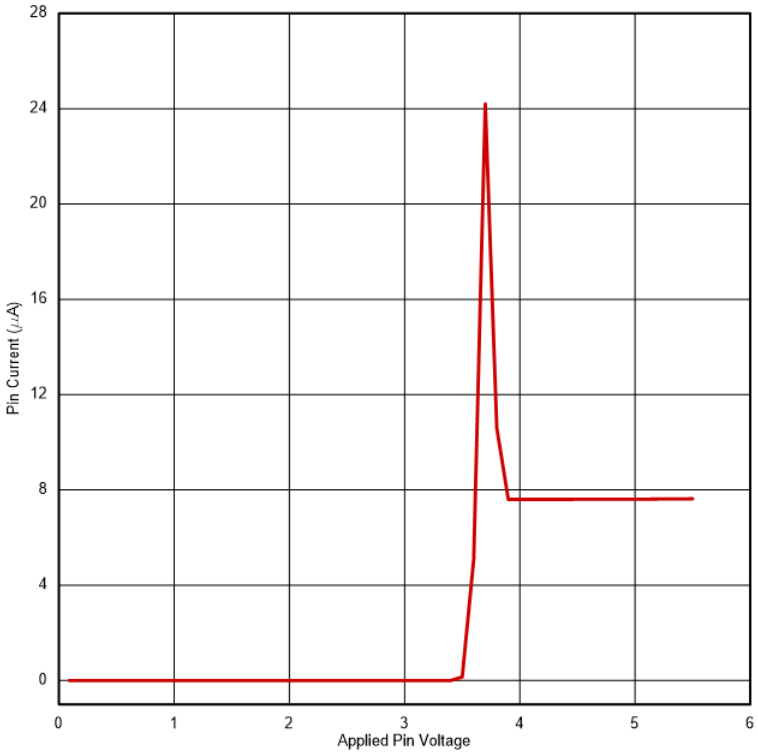

Figure 6-1. Leakage Current vs Input Voltage (Device Powered)

6.8 Thermal Resistance Characteristics for PDT Package

		°C/W(1)
$R\Theta_{JC}$	Junction-to-case thermal resistance	10.6
$R\Theta_{JB}$	Junction-to-board thermal resistance	24.9
$R\Theta_{JA}$ (High k PCB)	Junction-to-free air thermal resistance	42.5
Psi_{JT}	Junction-to-package top	0.4
Psi_{JB}	Junction-to-board	24.4

(1) These values are based on a JEDEC-defined 2S2P system (with the exception of the Theta JC [$R\Theta_{JC}$] value, which is based on a JEDEC-defined 1S0P system) and will change based on environment as well as application. For more information, see these EIA/JEDEC standards:

- JESD51-2, *Integrated Circuits Thermal Test Method Environmental Conditions - Natural Convection (Still Air)*
- JESD51-3, *Low Effective Thermal Conductivity Test Board for Leaded Surface Mount Packages*
- JESD51-7, *High Effective Thermal Conductivity Test Board for Leaded Surface Mount Packages*
- JESD51-9, *Test Boards for Area Array Surface Mount Package Thermal Measurements*

6.9 Thermal Resistance Characteristics for PZ Package

		°C/W(1)
$R\Theta_{JC}$	Junction-to-case thermal resistance	11
$R\Theta_{JB}$	Junction-to-board thermal resistance	28.8
$R\Theta_{JA}$ (High k PCB)	Junction-to-free air thermal resistance	46.4
Psi_{JT}	Junction-to-package top	0.4
Psi_{JB}	Junction-to-board	28.2

(1) These values are based on a JEDEC-defined 2S2P system (with the exception of the Theta JC [$R\Theta_{JC}$] value, which is based on a JEDEC-defined 1S0P system) and will change based on environment as well as application. For more information, see these EIA/JEDEC standards:

- JESD51-2, *Integrated Circuits Thermal Test Method Environmental Conditions - Natural Convection (Still Air)*
- JESD51-3, *Low Effective Thermal Conductivity Test Board for Leaded Surface Mount Packages*
- JESD51-7, *High Effective Thermal Conductivity Test Board for Leaded Surface Mount Packages*
- JESD51-9, *Test Boards for Area Array Surface Mount Package Thermal Measurements*

6.10 Thermal Resistance Characteristics for PNA Package

		°C/W(1)
$R\Theta_{JC}$	Junction-to-case thermal resistance	14.5
$R\Theta_{JB}$	Junction-to-board thermal resistance	29.5
$R\Theta_{JA}$ (High k PCB)	Junction-to-free air thermal resistance	51.7
Psi_{JT}	Junction-to-package top	0.5
Psi_{JB}	Junction-to-board	29.4

(1) These values are based on a JEDEC-defined 2S2P system (with the exception of the Theta JC [$R\Theta_{JC}$] value, which is based on a JEDEC-defined 1S0P system) and will change based on environment as well as application. For more information, see these EIA/JEDEC standards:

- JESD51-2, *Integrated Circuits Thermal Test Method Environmental Conditions - Natural Convection (Still Air)*
- JESD51-3, *Low Effective Thermal Conductivity Test Board for Leaded Surface Mount Packages*
- JESD51-7, *High Effective Thermal Conductivity Test Board for Leaded Surface Mount Packages*
- JESD51-9, *Test Boards for Area Array Surface Mount Package Thermal Measurements*

Copyright © 2026 Texas Instruments Incorporated

6.11 Thermal Resistance Characteristics for PM Package

		°C/W(1)
$R\Theta_{JC}$	Junction-to-case thermal resistance	11.6
$R\Theta_{JB}$	Junction-to-board thermal resistance	24.9
$R\Theta_{JA}$ (High k PCB)	Junction-to-free air thermal resistance	45
Psi_{JT}	Junction-to-package top	0.4
Psi_{JB}	Junction-to-board	24.5

(1) These values are based on a JEDEC-defined 2S2P system (with the exception of the Theta JC [$R\Theta_{JC}$] value, which is based on a JEDEC-defined 1S0P system) and will change based on environment as well as application. For more information, see these EIA/JEDEC standards:

- JESD51-2, *Integrated Circuits Thermal Test Method Environmental Conditions - Natural Convection (Still Air)*
- JESD51-3, *Low Effective Thermal Conductivity Test Board for Leaded Surface Mount Packages*
- JESD51-7, *High Effective Thermal Conductivity Test Board for Leaded Surface Mount Packages*
- JESD51-9, *Test Boards for Area Array Surface Mount Package Thermal Measurements*

6.12 Thermal Resistance Characteristics for RSH Package

		°C/W(1)
$R\Theta_{JC}$	Junction-to-case thermal resistance(top)	11.6
	Junction-to-case thermal resistance(bottom)	1.2
$R\Theta_{JB}$	Junction-to-board thermal resistance	6.7
$R\Theta_{JA}$ (High k PCB)	Junction-to-free air thermal resistance	23.7
Psi_{JT}	Junction-to-package top	0.1
Psi_{JB}	Junction-to-board	6.7

(1) These values are based on a JEDEC-defined 2S2P system (with the exception of the Theta JC [$R\Theta_{JC}$] value, which is based on a JEDEC-defined 1S0P system) and will change based on environment as well as application. For more information, see these EIA/JEDEC standards:

- JESD51-2, *Integrated Circuits Thermal Test Method Environmental Conditions - Natural Convection (Still Air)*
- JESD51-3, *Low Effective Thermal Conductivity Test Board for Leaded Surface Mount Packages*
- JESD51-7, *High Effective Thermal Conductivity Test Board for Leaded Surface Mount Packages*
- JESD51-9, *Test Boards for Area Array Surface Mount Package Thermal Measurements*

6.13 Thermal Design Considerations

Based on the end application design and operational profile, the I_{DD} and I_{DDIO} currents could vary. Systems that exceed the recommended maximum power dissipation in the end product may require additional thermal enhancements. Ambient temperature (T_A) varies with the end application and product design. The critical factor that affects reliability and functionality is T_J, the junction temperature, not the ambient temperature. Hence, care should be taken to keep T_J within the specified limits. T_{case} should be measured to estimate the operating junction temperature T_J. T_{case} is normally measured at the center of the package top-side surface. The thermal application note *Semiconductor and IC Package Thermal Metrics* helps to understand the thermal metrics and definitions.

Copyright © 2026 Texas Instruments Incorporated

6.14 System

6.14.1 Power Management Module (PMM)

6.14.1.1 Introduction

The Power Management Module (PMM) handles all the power management functions required for device operation.

6.14.1.2 Overview

The block diagram of the PMM is shown in Figure 6-2. As can be seen, the PMM comprises of various subcomponents, which are described in the subsequent sections.

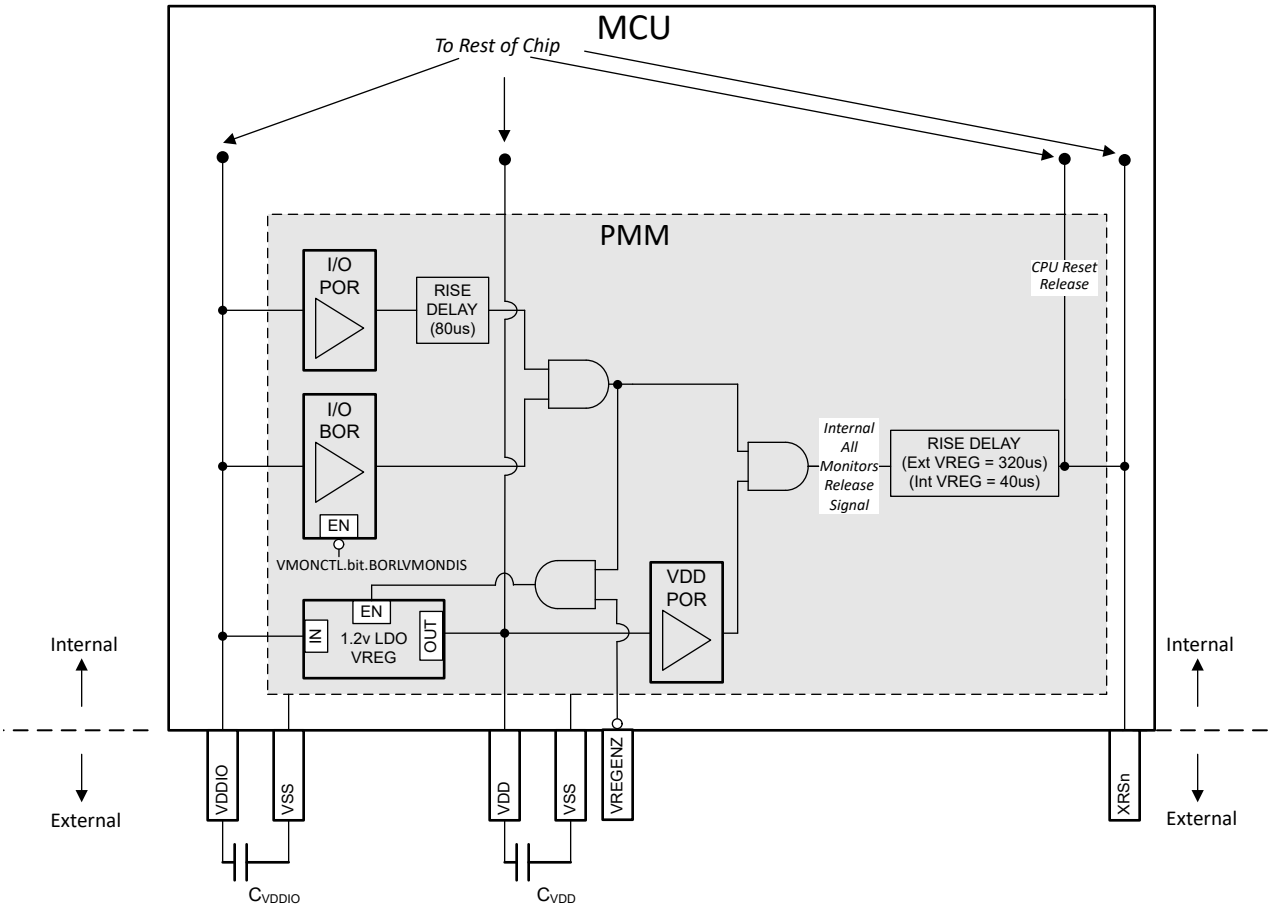

Figure 6-2. PMM Block Diagram

6.14.1.2.1 Power Rail Monitors

The PMM has voltage monitors on the supply rails that release the XRSn signal high once the voltages cross the set threshold during power up. They also function to trip the XRSn signal low if any of the voltages drop below the programmed levels. The various voltage monitors are described in subsequent sections.

Note

Not all the voltage monitors are supported for device operation in an application after boot up. In the case where a voltage monitor is not supported, an external supervisor is recommended if the device needs supply voltage monitoring while the application is running.

The three voltage monitors (I/O POR, I/O BOR, VDD POR) all have to release their respective outputs before the device begins operation (that is, XRSn goes high). However, if any of the voltage monitors trips, XRSn is driven low. The I/Os are held in high impedance when any of the voltage monitors trip.

Copyright © 2026 Texas Instruments Incorporated

6.14.1.2.1.1 I/O POR (Power-On Reset) Monitor

The I/O POR monitor supervises the VDDIO rail. During power up, this is the first monitor to release (that is, first to untrip) on VDDIO.

Note

The level at which the I/O POR trips is well below the minimum recommended voltage for VDDIO, and therefore should not be used for device supervision.

6.14.1.2.1.2 I/O BOR (Brown-Out Reset) Monitor

The I/O BOR monitor also supervises the VDDIO rail. During power up, this is the second monitor to release (that is, second to untrip) on VDDIO. This monitor has a tighter tolerance compared to the I/O POR.

Any drop in voltage below the recommended operating voltages will trip the I/O BOR and reset the device but this can be disabled by setting VMONCTL.bit.BORLVMONDIS to 1. The I/O BOR can only be disabled after the device has fully booted up. If the I/O BOR is disabled, the I/O POR will reset the device for voltage drops.

Figure 6-3 shows the operating region of the I/O BOR.

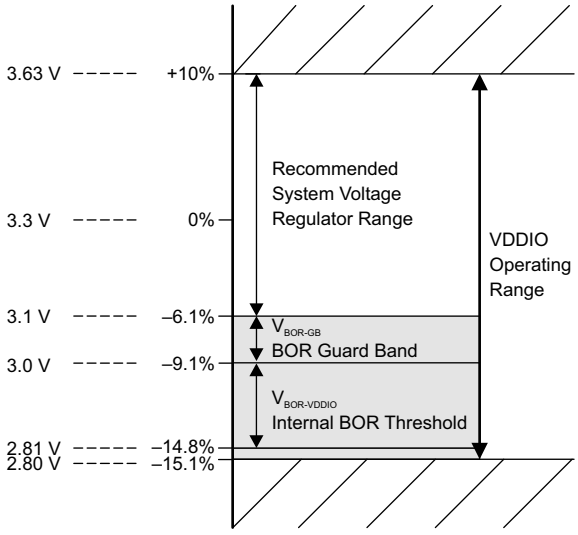

Figure 6-3. I/O BOR Operating Region

6.14.1.2.1.3 VDD POR (Power-On Reset) Monitor

The VDD POR monitor supervises the VDD rail. During power up, this monitor releases (that is, untrips) once the voltage crosses the programmed trip level on VDD.

Note

VDD POR is programmed at a level below the minimum recommended voltage for VDD, and therefore it should not be relied upon for VDD supervision if that is required in the application.

6.14.1.2.2 External Supervisor Usage

VDDIO Monitoring: The I/O BOR feature can be used for I/O rail monitoring as long as it meets the application requirement.

VDD Monitoring:

- VDD supplied from the internal VREG: The VDD supply is derived from the VDDIO supply. The VREG is designed in such a way that a valid VDDIO supply(monitored by the IO BOR) implies a valid VDD supply.
- VDD supplied from an external supply: The VDD POR is not supported for application use. If VDD monitoring is required by the application, an external supervisor can be used to monitor the VDD rail.

Note

The use of an external supervisor with the internal VREG is not supported.If VDD monitoring is required by the application, a package with a VREGENZ pin must be used to power VDD externally.

6.14.1.2.3 Delay Blocks

The delay blocks in the path of the voltage monitors work together to delay the release time between the voltage monitors and XRSn. This is to ensure that the voltages are stable when XRSn releases. The delay blocks are only active during power up (that is, when VDDIO and VDD are ramping up).

The delay blocks contribute to the minimum slew rates specified in Power Management Module Electrical Data and Timing for the power rails.

Note

The delay numbers specified in the block diagram are typical numbers.

6.14.1.2.4 Internal VDD LDO Voltage Regulator (VREG)

The internal VREG is supplied by the VDDIO rail and can generate the required output to power the VDD pins. It is enabled by tying the VREGENZ pin low. Although the internal VREG eliminates the need to use an external supply for VDD, decoupling capacitors are still required on the VDD pins for VREG stability and transients. See the *VDD Decoupling* section for details.

6.14.1.2.5 VREGENZ

The VREGENZ (VREG disable) pin controls the state of the internal VREG. To enable the internal VREG, connect the VREGENZ pin to a logic low voltage. For applications supplying VDD externally (external VREG), disable the internal VREG by tying the VREGENZ pin high.

Note

Not all device packages have VREGENZ pinned out. For packages without VREGENZ, external VREG mode is not supported.

6.14.1.3 External Components

6.14.1.3.1 Decoupling Capacitors

VDDIO and VDD require decoupling capacitors for correct operation. The requirements are outlined in subsequent sections.

6.14.1.3.1.1 VDDIO Decoupling

Place a minimum amount of decoupling capacitance on VDDIO. See the C_{VDDIO} parameter in Power Management Module Electrical Data and Timing. The actual amount of decoupling capacitance to use is a requirement of the power supply driving VDDIO. Either of the configurations outlined below is acceptable:

- **Configuration 1:** Place a decoupling capacitor on each VDDIO pin per the C_{VDDIO} parameter.
- **Configuration 2:** Install a single decoupling capacitor that is the equivalent of C_{VDDIO} * VDDIO pins.

Note

Having the decoupling capacitor or capacitors close to the device pins is critical.

Copyright © 2026 Texas Instruments Incorporated

6.14.1.3.1.2 VDD Decoupling

Place a minimum amount of decoupling capacitance on VDD. See the C_{VDD} TOTAL parameter in Power Management Module Electrical Data and Timing.

In external VREG mode, the actual amount of decoupling capacitance to use is a requirement of the power supply driving VDD.

Either of the configurations outlined below is acceptable:

- **Configuration 1:** Divide C_{VDD} TOTAL equally across the VDD pins. This option may be used in internal VREG mode where it may be impossible to connect all the VDD pins together on the PCB. Refer to Supply Pins Ganging section.
- **Configuration 2:** Install a single decoupling capacitor with value of C_{VDD} TOTAL. In this configuration, all VDD pins must be connected to each other on the PCB.

Note

Having the decoupling capacitor or capacitors close to the device pins is critical.

6.14.1.4 Power Sequencing

6.14.1.4.1 Supply Pins Ganging

Connecting all 3.3-V rails together and supplying from a single source are strongly recommended. This list includes:

- VDDIO
- VDDA

In addition, connect all power pins to avoid leaving any unconnected.

In external VREG mode, the VDD pins should be tied together and supplied from a single source.

In internal VREG mode, tying the VDD pins together is optional as long as each VDD pin has a capacitor connected to pin. See the *VDD Decoupling* section for VDD decoupling configurations.

The analog modules on the device have fairly high PSRR; therefore, in most cases, noise on VDDA will have to exceed the recommended operating conditions of the supply rails before the analog modules see performance degradation. Therefore, supplying VDDA separately typically offers minimal benefits. Nevertheless, for the purposes of noise improvement, placing a pi filter between VDDIO and VDDA is acceptable.

Note

All the supply pins per rail are tied together internally. For example, all VDDIO pins are tied together internally, all VDD pins are tied together internally, and so forth.

6.14.1.4.2 Signal Pins Power Sequence

Before powering the device, do not apply voltage larger than 0.3 V above VDDIO or 0.3 V below VSS to any digital pin and 0.3 V above VDDA or 0.3 V below VSSA to any analog pin (including VREFHI). This sequencing is still required even if VDDIO and VDDA are not tied together.

CAUTION

If the above sequence is violated, device malfunction and possibly damage can occur as current will flow through unintended parasitic paths in the device.

Copyright © 2026 Texas Instruments Incorporated

6.14.1.4.3 Supply Pins Power Sequence

6.14.1.4.3.1 External VREG/VDD Mode Sequence

Figure 6-4 depicts the power sequencing requirements for external VREG mode. The values for all the parameters indicated can be found in Power Management Module Electrical Data and Timing.

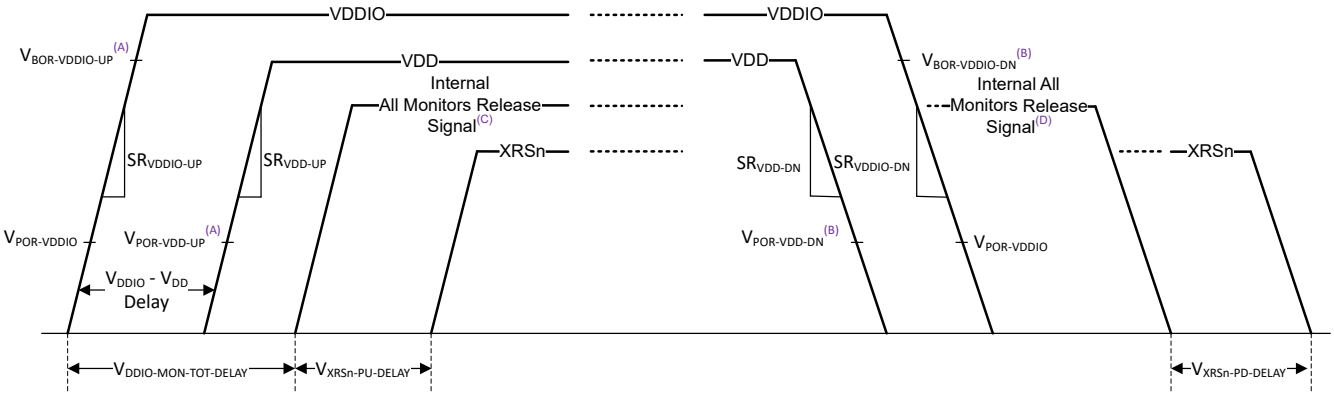

A. This trip point is the trip point before XRSn releases. See the *Power Management Module Characteristics* table.
B. This trip point is the trip point after XRSn releases. See the *Power Management Module Characteristics* table.
C. During power up, the All Monitors Release Signal goes high after all POR and BOR monitors are released. See the *PMM Block Diagram*.
D. During power down, the All Monitors Release Signal goes low if any of the POR or BOR monitors are tripped. See the *PMM Block Diagram*.

Figure 6-4. External VREG Power Up Sequence

- **For Power Up:**
  1. VDDIO (that is, the 3.3-V rail) should come up first with the minimum slew rate specified.
  2. VDD (that is, the 1.2-V rail) should come up next with the minimum slew rate specified.
  3. The time delta between the VDDIO rail coming up and when the VDD rail can come up is also specified.
  4. After the times specified by $V_{DDIO\text{-}MON\text{-}TOT\text{-}DELAY}$ and $V_{XRSN\text{-}PD\text{-}DELAY}$, XRSn will be released and the device starts the boot-up sequence.
  5. The I/O BOR monitor has different release points during power up and power down.
  6. During power up, both VDDIO and VDD rails have to be up before XRSn releases.
- **For Power Down:**
  1. There is no requirement between VDDIO and VDD on which should power down first; however, there is a minimum slew rate specification.
  2. The I/O BOR monitor has different release points during power up and power down.
  3. Any of the POR or BOR monitors that trips during power down will cause XRSn to go low after $V_{XRSN\text{-}PD\text{-}DELAY}$.

Note

The *All Monitors Release Signal* is an internal signal.

Note

If there is an external circuit driving XRSn (for example, a supervisor), the boot-up sequence does not start until the XRSn pin is released by all internal and external sources.

Copyright © 2026 Texas Instruments Incorporated

6.14.1.4.3.2 Internal VREG/VDD Mode Sequence

Figure 6-5 depicts the power sequencing requirements for internal VREG mode. The values for all the parameters indicated can be found in Power Management Module Electrical Data and Timing.

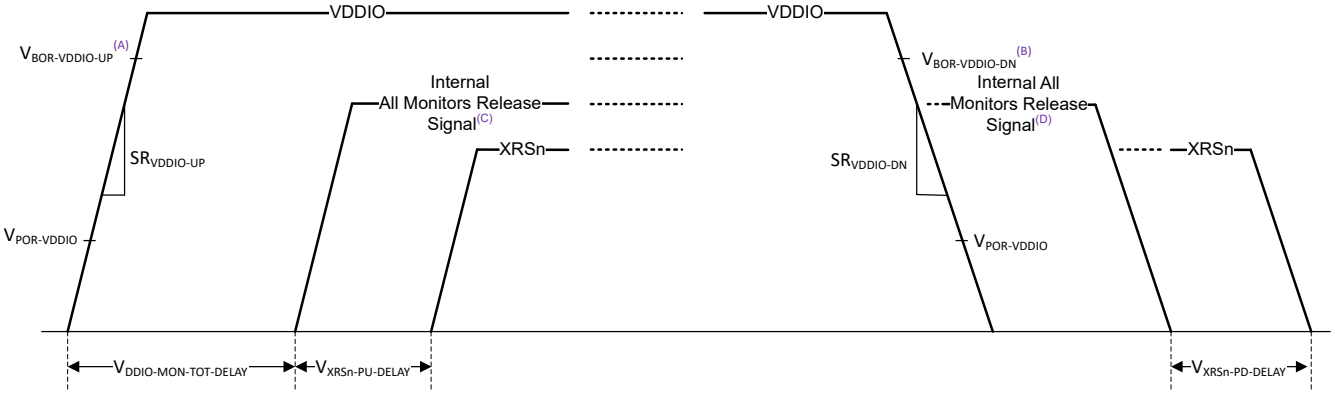

A. This trip point is the trip point before XRSn releases. See the *Power Management Module Characteristics* table.
B. This trip point is the trip point after XRSn releases. See the *Power Management Module Characteristics* table.
C. During power up, the All Monitors Release Signal goes high after all POR and BOR monitors are released. See the *PMM Block Diagram*.
D. During power down, the All Monitors Release Signal goes low if any of the POR or BOR monitors are tripped. See the *PMM Block Diagram*.

Figure 6-5. Internal VREG Power-Up Sequence

- **For Power Up:**
  1. VDDIO (that is, the 3.3-V rail) should come up with the minimum slew rate specified.
  2. The Internal VREG powers up after the I/O monitors (I/O POR and I/O BOR) are released.
  3. After the times specified by $V_{DDIO-MON-TOT-DELAY}$ and $V_{XRSN-PU-DELAY}$, XRSn will be released and the device starts the boot-up sequence.
  4. The I/O BOR monitor has different release points during power up and power down.
- **For Power Down:**
  1. The only requirement on VDDIO during power down is the slew rate.
  2. The I/O BOR monitor has different release points during power up and power down.
  3. The I/O BOR tripping will cause XRSn to go low after $V_{XRSN-PD-DELAY}$ and also power down the Internal VREG.

Note

The *All Monitors Release Signal* is an internal signal.

Note

If there is an external circuit driving XRSn (for example, a supervisor), the boot-up sequence does not start until the XRSn pin is released by all internal and external sources.

6.14.1.4.3.3 Supply Sequencing Summary and Effects of Violations

The acceptable power-up sequence for the rails is summarized below. "Power up" here means the rail in question has reached the minimum recommended operating voltage.

CAUTION

Non-acceptable sequences leads to reliability concerns and possibly damage.

Copyright © 2026 Texas Instruments Incorporated

For simplicity, connecting all 3.3-V rails together and following the descriptions in Supply Pins Power Sequence is recommended.

Table 6-1. External VREG Sequence Summary

CASE	RAILS POWER-UP ORDER			ACCEPTABLE
	VDDIO	VDDA	VDD	
A	1	2	3	Yes
B	1	3	2	Yes
C	2	1	3	No
D	2	3	1	No
E	3	2	1	No
F	3	1	2	No
G	1	1	2	Yes
H	2	2	1	No

Table 6-2. Internal VREG Sequence Summary

CASE	RAILS POWER-UP ORDER		ACCEPTABLE
	VDDIO	VDDA	
A	1	2	Yes
B	2	1	No
C	1	1	Yes

Note

The analog modules on the device should only be powered after VDDA has reached the minimum recommended operating voltage.

6.14.1.4.3.4 Supply Slew Rate

VDDIO has a minimum slew rate requirement. If the minimum slew rate is not met, XRSn might toggle a few times until VDDIO crosses the I/O BOR region.

Note

The toggling on XRSn has no adverse effect on the device as boot only starts once XRSn is steadily high. However if XRSn from the device is used to gate the reset signal of other ICs, then the slew rate requirement should be met to prevent this toggling.

VDD has a minimum slew rate requirement in external VREG mode. If the minimum slew rate is not met, the VDD POR may release before the VDD operational minimum voltage is met and the device may not start in a proper reset state.

6.14.1.5 Recommended Operating Conditions Applicability to the PMM

As noted in the *Recommended Operating Conditions* table, the voltage (V_{IN}) of all pins on the device should be kept above VSS – 0.3 V. Negative voltages below this value will inject current into the device, which could cause abnormal operation. Specific care should be taken for pins near the PMM. A negative voltage on these pins can cause the POR or BOR blocks to unexpectedly assert XRSn or disable the internal VREG (see the *PMM Block Diagram*). Pins near the PMM on this device are shown in the *Pins Near PMM* table below.

Table 6-3. Pins Near PMM

PIN NAME	PIN NUMBER				
	128 PDT	100 PZ	80 PNA	64 PM	56 RSH
GPIO42	94	–	57	–	–
GPIO8	95	74	58	47	–

Copyright © 2026 Texas Instruments Incorporated

Methods to avoid negative noise on pins include (in order of importance):

1. Reduce or eliminate noise at the source.
2. Avoid coupling between noise sources on these pins.
3. Filters near the device pin to isolate any noise.

Copyright © 2026 Texas Instruments Incorporated

6.14.1.6 Power Management Module Electrical Data and Timing

6.14.1.6.1 Power Management Module Operating Conditions

over recommended operating conditions (unless otherwise noted)

PARAMETER		TEST CONDITIONS	MIN	TYP	MAX	UNIT
General						
C_{VDDIO} (1) (2)	VDDIO Capacitance Per Pin(7)		0.1			uF
C_{VDDA} (1) (2)	VDDA Capacitance Per Pin(7)		2.2			uF
SR_{VDD33} (3)	Supply Ramp Rate of 3.3V Rails (VDDIO, VDDA)		20		100	mV/us
$V_{BOR-VDDIO-GB}$ (5)	VDDIO Brown Out Reset Voltage Guardband			0.1		V
External VREG						
$C_{VDD\ TOTAL}$ (1) (4)	Total VDD Capacitance(7)		10			uF
SR_{VDD12} (3)	Supply Ramp Rate of 1.2V Rail (VDD)		10		100	mV/us
V_{DDIO} - V_{DD} Delay(6)	Ramp Delay Between VDDIO and VDD		0			us
Internal VREG						
$C_{VDD\ TOTAL}$ (1) (4)	Total Nominal VDD Capacitance(7)		10		22	uF

(1) A bulk capacitor should also be used. The exact value of the decoupling capacitance depends on the system voltage regulation solution that is supplying these pins.
(2) It is recommended to tie the 3.3V rails (VDDIO, VDDA) together and supply them from a single source.
(3) See the *Supply Slew Rate* section. Supply ramp rate faster than the maximum can trigger the on-chip ESD protection.
(4) See the *Power Management Module (PMM)* section on possible configurations for the total decoupling capacitance.
(5) TI recommends $V_{BOR-VDDIO-GB}$ to avoid BOR-VDDIO resets due to normal supply noise or load-transient events on the 3.3-V VDDIO system regulator. Good system regulator design and decoupling capacitance (following the system regulator specifications) are important to prevent activation of the BOR-VDDIO during normal device operation. The value of $V_{BOR-VDDIO-GB}$ is a system-level design consideration; the voltage listed here is typical for many applications.
(6) Delay between when the 3.3-V rail ramps up and when the 1.2-V rail ramps up. See the *VREG Sequence Summary* table for the allowable supply ramp sequences.
(7) Max capacitor tolerance should be 20%.

6.14.1.6.2 Power Management Module Characteristics

over recommended operating conditions (unless otherwise noted)

PARAMETER		TEST CONDITIONS	MIN	TYP	MAX	UNIT
V_{VREG}	Internal Voltage Regulator Output		1.152	1.2	1.248	V
$V_{VREG-PU}$	Internal Voltage Regulator Power Up Time				350	us
$V_{VREG-INRUSH}$ (4)	Internal Voltage Regulator Inrush Current			650		mA
$V_{POR-VDDIO}$	VDDIO Power on Reset Voltage	Before and After XRSn Release		2.3		V
$V_{BOR-VDDIO-UP}$ (1)	VDDIO Brown Out Reset Voltage on Ramp Up	Before XRSn Release		2.7		V
$V_{BOR-VDDIO-DOWN}$ (1)	VDDIO Brown Out Reset Voltage on Ramp Down	After XRSn Release	2.81		3.0	V
$V_{XRSn-PU-DELAY}$ (2)	XRSn Release Delay after Supplies are Ramped Up During Power-Up			40		us

Copyright © 2026 Texas Instruments Incorporated

6.14.1.6.2 Power Management Module Characteristics (continued)

over recommended operating conditions (unless otherwise noted)

PARAMETER		TEST CONDITIONS	MIN	TYP	MAX	UNIT
$V_{XRSn\text{-}PD\text{-}DELAY}$ (3)	XRSn Trip Delay after Supplies are Ramped Down During Power-Down			2		us
$V_{DDIO\text{-}MON\text{-}TOT\text{-}DELAY}$	Total Delays in Path of VDDIO Monitors (POR, BOR)			80		us
$V_{XRSn\text{-}MON\text{-}RELEASE\text{-}DELAY}$	XRSn Release Delay after a VDD POR Event	Supplies Within Operating Range		40		us
	XRSn Release Delay after a VDDIO BOR Event			40		us
	XRSn Release Delay after a VDDIO POR Event			120		us

(1) See the *I/O BOR Operating Region* figure.
(2) Supplies are considered fully ramped up after they cross the minimum recommended operating conditions for the respective rail. All POR and BOR monitors need to be released before this delay takes effect.
(3) On power down, any of the POR or BOR monitors that trips will immediately trip XRSn. This delay is the time between any of the POR, BOR monitors tripping and XRSn going low. It is variable and depends on the ramp down rate of the supply.
(4) This is the transient current drawn on the VDDIO rail when the internal VREG turns on. Due to this, there might be some voltage drops on the VDDIO rail when the VREG turns on which could cause the VREG to ramp up in steps. There is no detriment to the device from this but the effect can be reduced if desired by using sufficient decoupling capacitors on VDDIO or picking an LDO/DC-DC that can supply this transient current.

Copyright © 2026 Texas Instruments Incorporated

6.14.2 Reset Timing

XRSn is the device reset pin. It functions as an input and open-drain output. The device has a built-in power-on reset (POR) and brown-out reset (BOR) monitors. During power up, the monitor circuits keep the XRSn pin low. For more details, see the *Power Management Module (PMM)* section. A watchdog or NMI watchdog reset will also drive the pin low. An external open-drain circuit may drive the pin to assert a device reset.

A resistor with a value from 2.2 kΩ to 10 kΩ should be placed between XRSn and VDDIO. A capacitor should be placed between XRSn and VSS for noise filtering, it should be 100 nF or smaller. These values will allow the watchdog to properly drive the XRSn pin to V_{OL} within 512 OSCCLK cycles when the watchdog reset is asserted. Figure 6-6 shows the recommended reset circuit.

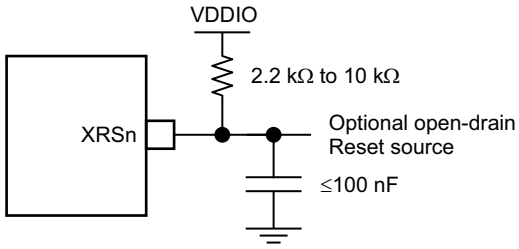

Figure 6-6. Reset Circuit

6.14.2.1 Reset Sources

The *Reset Signals* table summarizes the various reset signals and their effect on the device.

Table 6-4. Reset Signals

Reset Source	CPU Core Reset (C28x, FPU, TMU)	Peripherals Reset	JTAG / Debug Logic Reset	IOs	$\overline{\text{XRS}}$ Output
POR	Yes	Yes	Yes	Hi-Z	Yes
BOR	Yes	Yes	Yes	Hi-Z	Yes
$\overline{\text{XRS}}$ Pin	Yes	Yes	No	Hi-Z	-
$\overline{\text{WDRS}}$	Yes	Yes	No	Hi-Z	Yes
$\overline{\text{NMIWDRS}}$	Yes	Yes	No	Hi-Z	Yes
$\overline{\text{SYSRS}}$ (Debugger Reset)	Yes	Yes	No	Hi-Z	No
$\overline{\text{SCCRESET}}$	Yes	Yes	No	Hi-Z	No
SIMRESET. $\overline{\text{XRS}}$	Yes	Yes	No	Hi-Z	Yes
SIMRESET. $\overline{\text{CPU1RS}}$	Yes	Yes	No	Hi-Z	No

The parameter $t_{h(boot\text{-}mode)}$ must account for a reset initiated from any of these sources.

See the *Resets* section of the System Control chapter in the *TMS320F28P55x Real-Time Microcontrollers Technical Reference Manual*.

CAUTION

Some reset sources are internally driven by the device. Some of these sources will drive XRSn low, use this to disable any other devices driving the boot pins. The SCCRESET and debugger reset sources do not drive XRSn; therefore, the pins used for boot mode should not be actively driven by other devices in the system. The boot configuration has a provision for changing the boot pins in OTP.

Copyright © 2026 Texas Instruments Incorporated

6.14.2.2 Reset Electrical Data and Timing

6.14.2.2.1 Reset - XRSn - Timing Requirements

		MIN	MAX	UNIT
$t_{h(boot-mode)}$	Hold time for boot-mode pins	1.5		ms
$t_{w(RSL2)}$	Pulse duration, XRSn low on warm reset	3.2		µs

6.14.2.2.2 Reset - XRSn - Switching Characteristics

over recommended operating conditions (unless otherwise noted)

PARAMETER		MIN	TYP	MAX	UNIT
$t_{w(RSL1)}$	Pulse duration, XRSn driven low by device after supplies are stable		100		µs
$t_{w(WDRS)}$	Pulse duration, reset pulse generated by watchdog		$512t_{c(OSCCLK)}$		cycles
$t_{boot-flash}$	Boot-ROM execution time to first instruction fetch in flash			1.2	ms

6.14.2.2.3 Reset Timing Diagrams

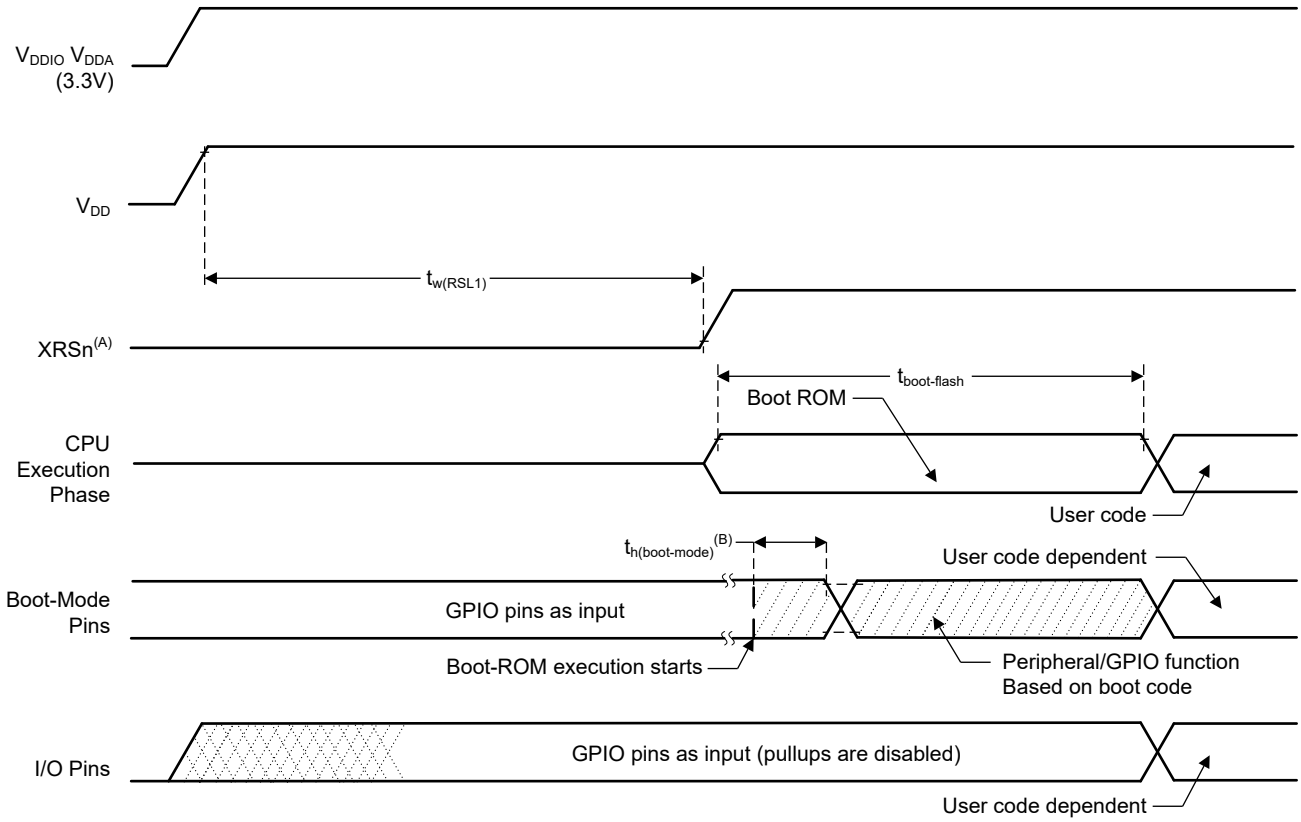

A. The XRSn pin can be driven externally by a supervisor or an external pullup resistor, see the *Pin Attributes* table. On-chip monitors will hold this pin low until the supplies are in a valid range.

B. After reset from any source (see the *Reset Sources* section), the boot ROM code samples Boot Mode pins. Based on the status of the Boot Mode pin, the boot code branches to destination memory or boot code function. If boot ROM code executes after power-on conditions (in debugger environment), the boot code execution time is based on the current SYSCLK speed. The SYSCLK will be based on user environment and could be with or without PLL enabled.

Figure 6-7. Power-on Reset

Copyright © 2026 Texas Instruments Incorporated

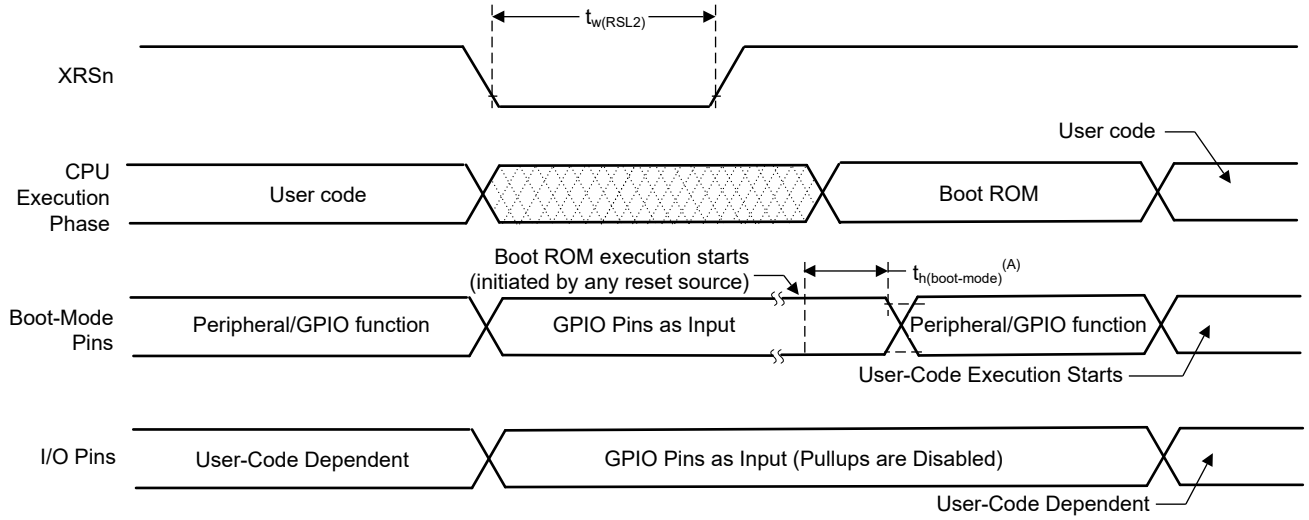

A. After reset from any source (see the *Reset Sources* section), the Boot ROM code samples BOOT Mode pins. Based on the status of the Boot Mode pin, the boot code branches to destination memory or boot code function. If Boot ROM code executes after power-on conditions (in debugger environment), the Boot code execution time is based on the current SYSCLK speed. The SYSCLK will be based on user environment and could be with or without PLL enabled.

Figure 6-8. Warm Reset

Copyright © 2026 Texas Instruments Incorporated

6.14.3 Clock Specifications

6.14.3.1 Clock Sources

Table 6-5. Possible Reference Clock Sources

CLOCK SOURCE	DESCRIPTION
INTOSC1	Internal oscillator 1. 10-MHz internal oscillator.
INTOSC2(1)	Internal oscillator 2. 10-MHz internal oscillator.
X1 (XTAL)	External crystal or resonator connected between the X1 and X2 pins or single-ended clock connected to the X1 pin.

(1) On reset, internal oscillator 2 (INTOSC2) is the default clock source for the PLL (OSCCLK).

Copyright © 2026 Texas Instruments Incorporated

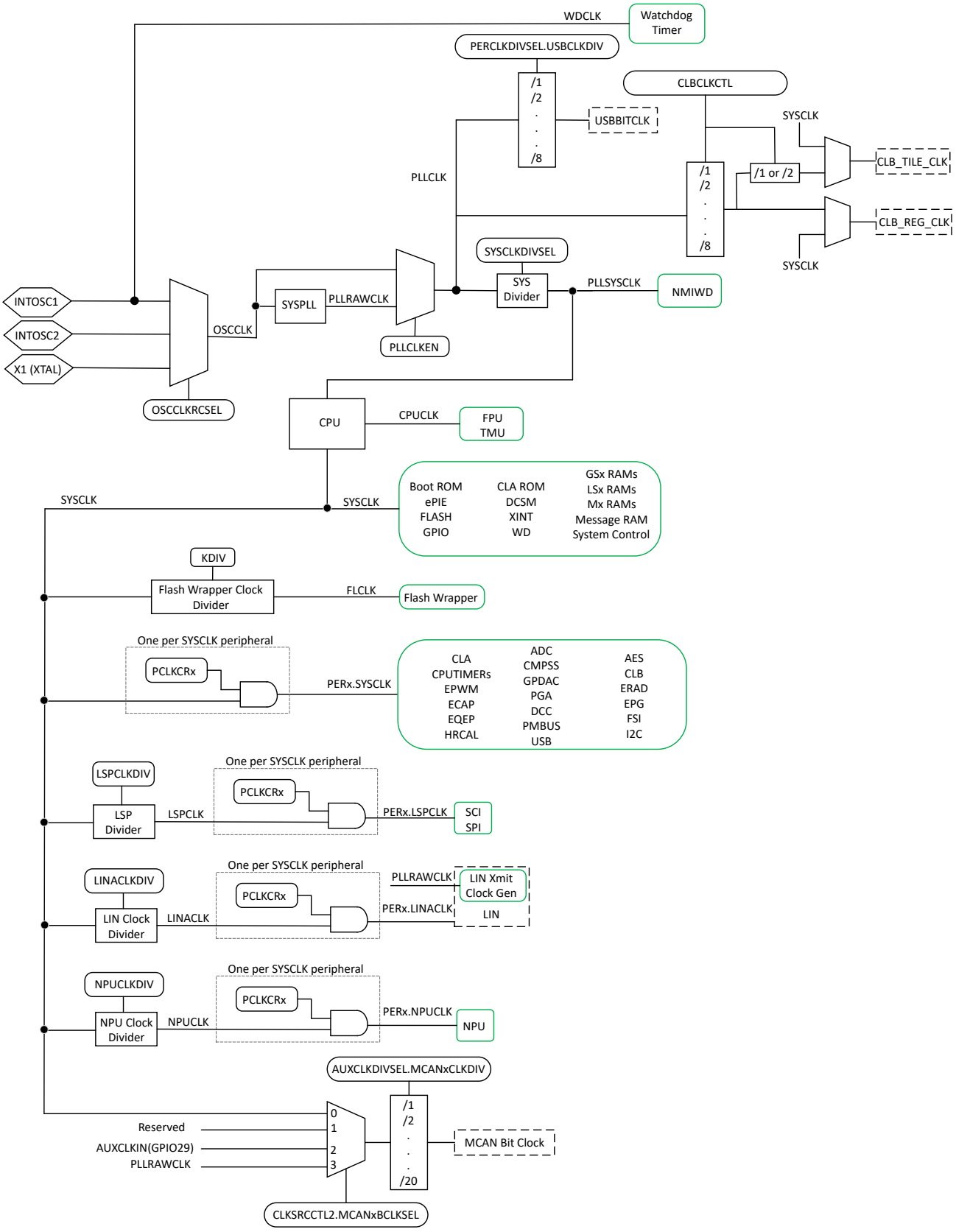

Figure 6-9. Clocking System

Copyright © 2026 Texas Instruments Incorporated

SYSPLL

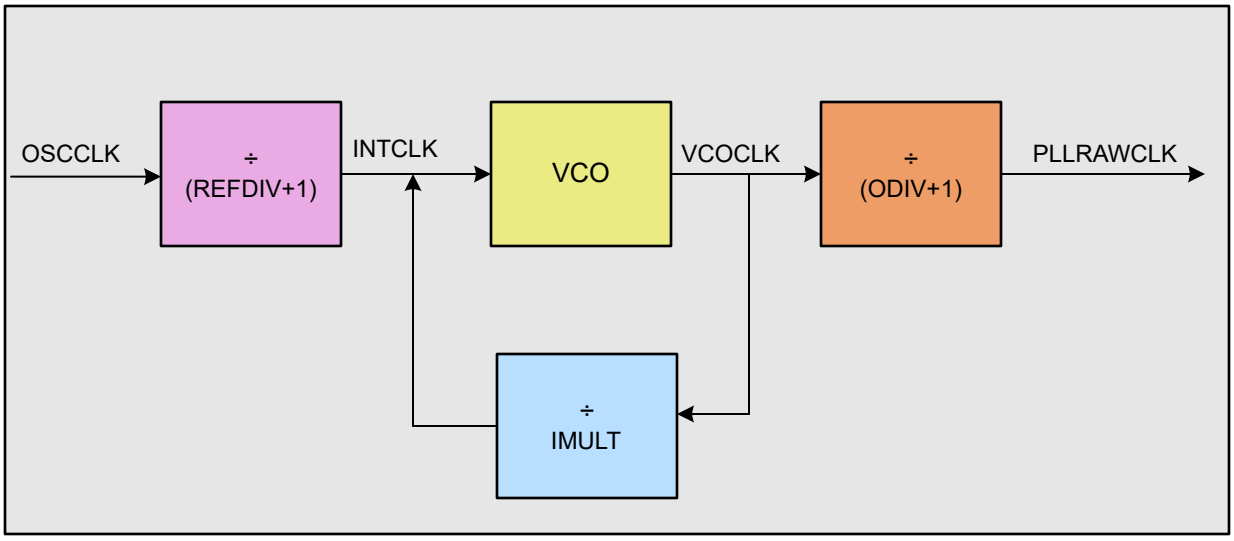

Figure 6-10. System PLL

In the *System PLL* figure,

$$f_{PLLRAWCLK} = \frac{f_{OSCCLK}}{(REFDIV + 1)} \times \frac{IMULT}{(ODIV + 1)} \quad (1)$$

6.14.3.2 Clock Frequencies, Requirements, and Characteristics

This section provides the frequencies and timing requirements of the input clocks, PLL lock times, frequencies of the internal clocks, and the frequency and switching characteristics of the output clock.

6.14.3.2.1 Input Clock Frequency and Timing Requirements, PLL Lock Times

6.14.3.2.1.1 Input Clock Frequency

		MIN	MAX	UNIT
$f_{(XTAL)}$	Frequency, X1/X2, from external crystal or resonator	10	20	MHz
$f_{(X1)}$	Frequency, X1, from external oscillator	10	25	MHz

6.14.3.2.1.2 XTAL Oscillator Characteristics

over recommended operating conditions (unless otherwise noted)

PARAMETER		MIN	TYP	MAX	UNIT
X1 V_{IL}	Valid low-level input voltage	–0.3		0.3 * VDDIO	V
X1 V_{IH}	Valid high-level input voltage	0.7 * VDDIO		VDDIO + 0.3	V

6.14.3.2.1.3 X1 Input Level Characteristics When Using an External Clock Source - Not a Crystal

over recommended operating conditions (unless otherwise noted)

PARAMETER		MIN	MAX	UNIT
X1 V_{IL}	Valid low-level input voltage (Buffer)	–0.3	0.3 * VDDIO	V
X1 V_{IH}	Valid high-level input voltage (Buffer)	0.7 * VDDIO	VDDIO + 0.3	V

6.14.3.2.1.4 X1 Timing Requirements

		MIN	MAX	UNIT
$t_{f(X1)}$	Fall time, X1		6	ns

Copyright © 2026 Texas Instruments Incorporated

6.14.3.2.1.4 X1 Timing Requirements (continued)

		MIN	MAX	UNIT
$t_{r(X1)}$	Rise time, X1		6	ns
$t_{w(X1L)}$	Pulse duration, X1 low as a percentage of $t_{c(X1)}$	45%	55%	
$t_{w(X1H)}$	Pulse duration, X1 high as a percentage of $t_{c(X1)}$	45%	55%	

6.14.3.2.1.5 AUXCLKIN Timing Requirements

		MIN	MAX	UNIT
$t_{f(AUXI)}$	Fall time, AUXCLKIN		6	ns
$t_{r(AUXI)}$	Rise time, AUXCLKIN		6	ns
$t_{w(AUXL)}$	Pulse duration, AUXCLKIN low as a percentage of $t_{c(XCI)}$	45%	55%	
$t_{w(AUXH)}$	Pulse duration, AUXCLKIN high as a percentage of $t_{c(XCI)}$	45%	55%	

6.14.3.2.1.6 APLL Characteristics

over recommended operating conditions (unless otherwise noted)

PARAMETER	MIN	TYP	MAX	UNIT
PLL Lock time				
SYS PLL Lock Time(1)			5µs + (1024 * (REFDIV + 1) * $t_{c(OSCCLK)}$)	us

(1) The PLL lock time here defines the typical time that takes for the PLL to lock once PLL is enabled (SYSPLLCTL1[PLLENA]=1). Additional time to verify the PLL clock using Dual Clock Comparator (DCC) is not accounted here. TI recommends using the latest example software from C2000Ware for initializing the PLLs. For the system PLL, see InitSysPll() or SysCtl_setClock().

6.14.3.2.1.7 XCLKOUT Switching Characteristics - PLL Bypassed or Enabled

over recommended operating conditions (unless otherwise noted)

PARAMETER(1)		MIN	MAX	UNIT
$t_{f(XCO)}$	Fall time, XCLKOUT		6	ns
$t_{r(XCO)}$	Rise time, XCLKOUT		6	ns
$t_{w(XCOL)}$	Pulse duration, XCLKOUT low	H – 2(2)	H + 2(2)	ns
$t_{w(XCOH)}$	Pulse duration, XCLKOUT high	H – 2(2)	H + 2(2)	ns
$f_{(XCO)}$	Frequency, XCLKOUT		50	MHz

(1) A load of 6 pF is assumed for these parameters.
(2) H = 0.5$t_{c(XCO)}$

6.14.3.2.1.8 Internal Clock Frequencies

		MIN	NOM	MAX	UNIT
$f_{(SYSCLK)}$	Frequency, device (system) clock	2		150	MHz
$t_{c(SYSCLK)}$	Period, device (system) clock	6.67		500	ns
$f_{(INTCLK)}$	Frequency, system PLL going into VCO (after REFDIV)	2		20	MHz
$f_{(VCOCLK)}$	Frequency, system PLL VCO (before ODIV)	220		600	MHz
$f_{(PLLRAWCLK)}$	Frequency, system PLL output (before SYSCLK divider)	6		300	MHz
$f_{(PLL)}$	Frequency, PLLSYSCLK	2		150	MHz
$f_{(PLL_LIMP)}$	Frequency, PLL Limp Frequency (1)		45/(ODIV+1)		MHz
$f_{(LSP)}$	Frequency, LSPCLK	2		150	MHz
$t_{c(LSPCLK)}$	Period, LSPCLK	6.67		500	ns
$f_{(OSCCLK)}$	Frequency, OSCCLK (INTOSC1 or INTOSC2 or XTAL or X1)		See respective clock		MHz
$f_{(EPWM)}$	Frequency, EPWMCLK			150	MHz
$f_{(HRPWM)}$	Frequency, HRPWMCLK	60		150	MHz

Copyright © 2026 Texas Instruments Incorporated

6.14.3.2.1.8 Internal Clock Frequencies (continued)

		MIN	NOM	MAX	UNIT
$f_{(NPU)}$	Frequency, NPUCLK	37.5		75	MHz
$f_{(CLB)}$	Frequency, CLBCLK			150	MHz

(1) PLL output frequency when OSCCLK is dead (Loss of OSCCLK causes PLL to Limp).

6.14.3.3 Input Clocks and PLLs

In addition to the internal 0-pin oscillators, three types of external clock sources are supported:

- A single-ended 3.3-V external clock. The clock signal should be connected to X1, as shown in Figure 6-11, with the XTALCR.SE bit set to 1.
- An external crystal. The crystal should be connected across X1 and X2 with its load capacitors connected to VSS as shown in Figure 6-12.
- An external resonator. The resonator should be connected across X1 and X2 with its ground connected to VSS as shown in Figure 6-13.

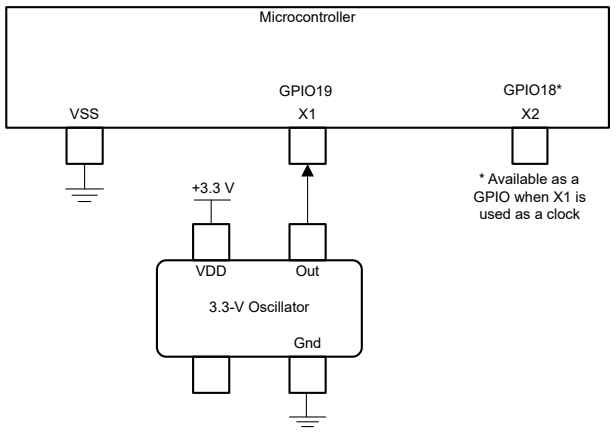

Figure 6-11. Single-ended 3.3-V External Clock

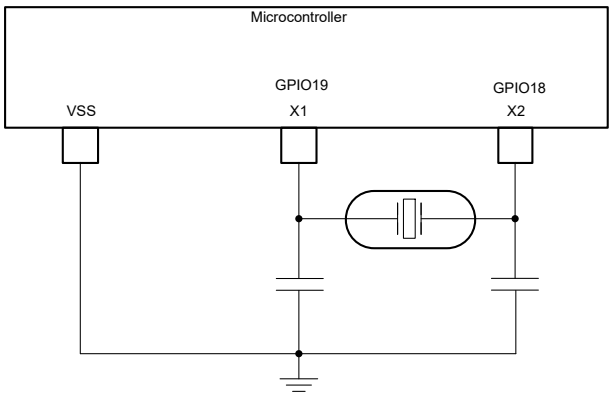

Figure 6-12. External Crystal

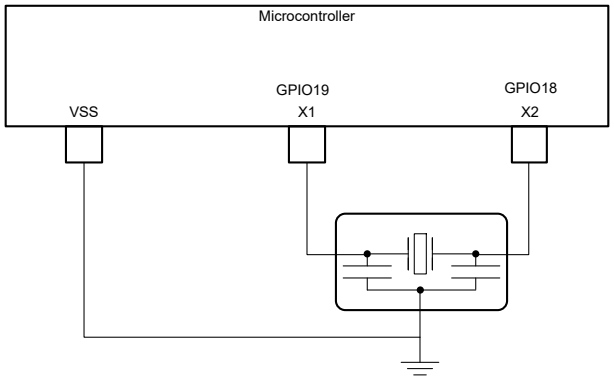

Figure 6-13. External Resonator

6.14.3.4 XTAL Oscillator

6.14.3.4.1 Introduction

The crystal oscillator in this device is an embedded electrical oscillator that, when paired with a compatible quartz crystal (or a ceramic resonator), can generate the system clock required by the device.

6.14.3.4.2 Overview

The following sections describe the components of the electrical oscillator and crystal.

6.14.3.4.2.1 Electrical Oscillator

The electrical oscillator in this device is a Pierce oscillator. It is a positive feedback inverter circuit that requires a tuning circuit in order to oscillate. When this oscillator is paired with a compatible crystal, a tank circuit is formed. This tank circuit oscillates at the fundamental frequency of the crystal. On this device, the oscillator is designed to operate in parallel resonance mode due to the shunt capacitor (C0) and required load capacitors (CL). Figure 6-14 illustrates the components of the electrical oscillator and the tank circuit.

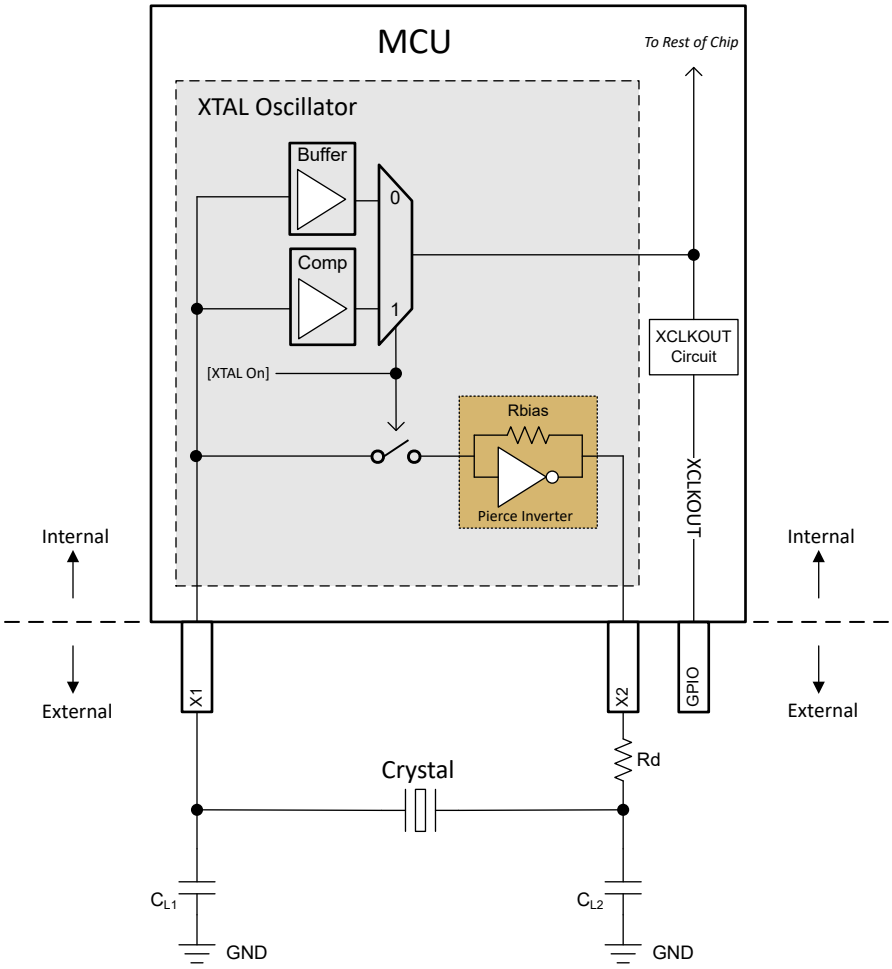

Figure 6-14. Electrical Oscillator Block Diagram

6.14.3.4.2.1.1 Modes of Operation

The electrical oscillator in this device has two modes of operation: crystal mode and single-ended mode.

6.14.3.4.2.1.1.1 Crystal Mode of Operation

In the crystal mode of operation, a quartz crystal with load capacitors has to be connected to X1 and X2.

This mode of operation is engaged when [XTAL On] = 1, which is achieved by setting XTALCR.OSCOFF = 0 and XTALCR.SE = 0. There is an internal bias resistor for the feedback loop so an external one should not be used. Adding an external bias resistor will create a parallel resistance with the internal Rbias, moving the bias point of operation and possibly leading to clipped waveforms, out-of-specification duty cycle, and reduction in the effective negative resistance.

In this mode of operation, the resultant clock on X1 is passed through a comparator (Comp) to the rest of the chip. The clock on X1 needs to meet the VIH and VIL of the comparator. See the *XTAL Oscillator Characteristics* table for the VIH and VIL requirements of the comparator.

Copyright © 2026 Texas Instruments Incorporated

6.14.3.4.2.1.1.2 Single-Ended Mode of Operation

In the single-ended mode of operation, a clock signal is connected to X1 with X2 left unconnected. A quartz crystal should not be used in this mode.

This mode is enabled when [XTAL On] = 0, which can be achieved by setting XTALCR.OSCOFF = 1 and XTALCR.SE = 1.

In this mode of operation, the clock on X1 is passed through a buffer (Buffer) to the rest of the chip. See the *X1 Input Level Characteristics When Using an External Clock Source (Not a Crystal)* table for the input requirements of the buffer.

6.14.3.4.2.1.2 XTAL Output on XCLKOUT

The output of the electrical oscillator that is fed to the rest of the chip can be brought out on XCLKOUT for observation by configuring the CLKSRCCTL3.XCLKOUTSEL and XCLKOUTDIVSEL.XCLKOUTDIV registers. See the *GPIO Muxed Pins* table for a list of GPIOs that XCLKOUT comes out on.

6.14.3.4.2.2 Quartz Crystal

Electrically, a quartz crystal can be represented by an LCR (Inductor-Capacitor-Resistor) circuit. However, unlike an LCR circuit, crystals have very high Q due to the low motional resistance and are also very underdamped. Components of the crystal are shown in Figure 6-15 and explained below.

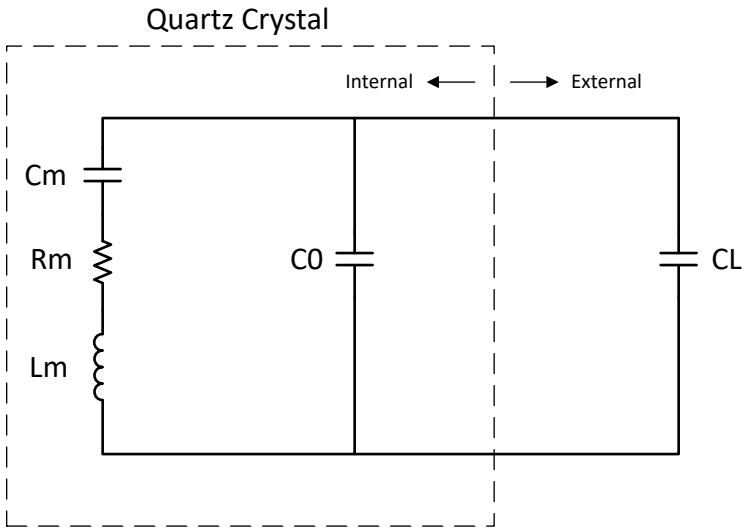

Figure 6-15. Crystal Electrical Representation

Cm (Motional capacitance): Denotes the elasticity of the crystal.

Rm (Motional resistance): Denotes the resistive losses within the crystal. This is not the ESR of the crystal but can be approximated as such depending on the values of the other crystal components.

Lm (Motional inductance): Denotes the vibrating mass of the crystal.

C0 (Shunt capacitance): The capacitance formed from the two crystal electrodes and stray package capacitance.

CL (Load capacitance): This is the effective capacitance seen by the crystal at its electrodes. It is external to the crystal. The frequency ppm specified in the crystal data sheet is usually tied to the CL parameter.

Note that most crystal manufacturers specify CL as the effective capacitance seen at the crystal pins, while some crystal manufacturers specify CL as the capacitance on just one of the crystal pins. Check with the crystal manufacturer for how the CL is specified in order to use the correct values in calculations.

Copyright © 2026 Texas Instruments Incorporated

From Figure 6-14, CL1 and CL2 are in series; so, to find the equivalent total capacitance seen by the crystal, the capacitance series formula has to be applied which simply evaluates to [CL1]/2 if CL1 = CL2.

It is recommended that a stray PCB capacitance be added to this value. 3 pF to 5 pF are reasonable estimates, but the actual value will depend on the PCB in question.

Note that the load capacitance is a requirement of both the electrical oscillator and crystal. The value chosen has to satisfy both the electrical oscillator and the crystal.

The effect of CL on the crystal is frequency-pulling. If the effective load capacitance is lower than the target, the crystal frequency will increase and vice versa. However, the effect of frequency-pulling is usually very minimal and typically results in less than 10-ppm variation from the nominal frequency.

6.14.3.4.2.3 GPIO Modes of Operation

On this device, X1 and X2 can be used as GPIO19 and GPIO18, respectively, depending on the operating mode of the XTAL. Refer to the *External Oscillator (XTAL)* section of the *TMS320F28P55x Real-Time Microcontrollers Technical Reference Manual* .

6.14.3.4.3 Functional Operation

6.14.3.4.3.1 ESR – Effective Series Resistance

Effective Series Resistance is the resistive load the crystal presents to the electrical oscillator at resonance. The higher the ESR, the lower the Q, and less likely the crystal will start up or maintain oscillation. The relationship between ESR and the crystal components is indicated below.

$$ESR = Rm * \left(1 + \frac{C0}{CL}\right)^2 \quad (2)$$

Note that ESR is not the same as motional resistance of the crystal, but can be approximated as such if the effective load capacitance is much greater than the shunt capacitance.

6.14.3.4.3.2 Rneg – Negative Resistance

Negative resistance is the impedance presented by the electrical oscillator to the crystal. It is the amount of energy the electrical oscillator must supply to the crystal to overcome the losses incurred during oscillation. Rneg depicts a circuit that provides rather than consume energy and can also be viewed as the overall gain of the circuit.

The generally accepted practice is to have Rneg > 3x ESR to 5x ESR to ensure the crystal starts up under all conditions. Note that it takes slightly more energy to start up the crystal than it does to sustain oscillation; therefore, if it can be ensured that the negative resistance requirement is met at start-up, then oscillation sustenance will not be an issue.

Figure 6-16 and Figure 6-17 show the variation between negative resistance and the crystal components for this device. As can be seen from the graphs, the crystal shunt capacitance (C0) and effective load capacitance (CL) greatly influence the negative resistance of the electrical oscillator. Note that these are typical graphs; so, refer to Table 6-6 for minimum and maximum values for design considerations.

6.14.3.4.3.3 Start-up Time

Start-up time is an important consideration when selecting the components of the crystal circuit. As mentioned in the *Rneg – Negative Resistance* section, for reliable start-up across all conditions, it is recommended that the Rneg > 3x ESR to 5x ESR of the crystal.

Crystal ESR and the dampening resistor (Rd) greatly affect the start-up time. The higher the two values, the longer the crystal takes to start up. Longer start-up times are usually a sign that the crystal and components are not a correct match.

Copyright © 2026 Texas Instruments Incorporated

Refer to the *Crystal Oscillator Specifications* section for the typical start-up times. Note that the numbers specified here are typical numbers provided for guidance only. Actual start-up time depends heavily on the crystal in question and the external components.

6.14.3.4.3.3.1 X1/X2 Precondition

On this device, the GPIO19/18 alternate functionality on X1/X2 can be used to speed up the start-up time of the crystal if needed. This functionality is achieved by preconditioning the load capacitors CL1 and CL2 to a known state before the XTAL is turned on. See the *TMS320F28P55x Real-Time Microcontrollers Technical Reference Manual* for details.

6.14.3.4.3.4 DL – Drive Level

Drive level refers to how much power is provided by the electrical oscillator and dissipated by the crystal. The maximum drive level specified in the crystal manufacturer's data sheet is usually the maximum the crystal can dissipate without damage or significant reduction in operating life. On the other hand, the drive level specified by the electrical oscillator is the maximum power it can provide. The actual power provided by the electrical oscillator is not necessarily the maximum power and depends on the crystal and board components.

For cases where the actual drive level from the electrical oscillator exceeds the maximum drive level specification of the crystal, a dampening resistor (Rd) should be installed to limit the current and reduce the power dissipated by the crystal. Note that Rd reduces the circuit gain; and therefore, the actual value to use should be evaluated to make sure all other conditions for start-up and sustained oscillation are met.

6.14.3.4.4 How to Choose a Crystal

Using Crystal Oscillator Specifications as a reference:

1. Pick a crystal frequency (for example, 20 MHz).
2. Check that the ESR of the crystal <=50 Ω per specifications for 20 MHz.
3. Check that the load capacitance requirement of the crystal manufacturer is within 6 pF and 12 pF per specifications for 20 MHz.
   - As mentioned, CL1 and CL2 are in series; so, provided CL1 = CL2, effective load capacitance CL = [CL1]/2.
   - Adding board parasitics to this results in CL = [CL1]/2 + Cstray
4. Check that the maximum drive level of the crystal >= 1 mW. If this requirement is not met, a dampening resistor Rd can be used. Refer to DL – Drive Level on other points to consider when using Rd.

6.14.3.4.5 Testing

It is recommended that the user have the crystal manufacturer completely characterize the crystal with their board to ensure the crystal always starts up and maintains oscillation.

Below is a brief overview of some measurements that can be performed:

Due to how sensitive the crystal circuit is to capacitance, it is recommended that scope probes not be connected to X1 and X2. If scope probes must be used to monitor X1/X2, an active probe with less than 1-pF input capacitance should be used.

Frequency

1. Bring out the XTAL on XCLKOUT.
2. Measure this frequency as the crystal frequency.

Negative Resistance

1. Bring out the XTAL on XCLKOUT.
2. Place a potentiometer in series with the crystal between the load capacitors.
3. Increase the resistance of the potentiometer until the clock on XCLKOUT stops.
4. This resistance plus the crystal's actual ESR is the negative resistance of the electrical oscillator.

Copyright © 2026 Texas Instruments Incorporated

Start-Up Time

1. Turn off the XTAL.
2. Bring out the XTAL on XCLKOUT.
3. Turn on the XTAL and measure how long it takes the clock on XCLKOUT to stay within 45% and 55% duty cycle.

Copyright © 2026 Texas Instruments Incorporated

6.14.3.4.6 Common Problems and Debug Tips

Crystal Fails to Start Up

- Go through the *How to Choose a Crystal* section and make sure there are no violations.

Crystal Takes a Long Time to Start Up

- If a dampening resistor Rd is installed, it is too high.
- If no dampening resistor is installed, either the crystal ESR is too high or the overall circuit gain is too low due to high load capacitance.

6.14.3.4.7 Crystal Oscillator Specifications

6.14.3.4.7.1 Crystal Equivalent Series Resistance (ESR) Requirements

For the Crystal Equivalent Series Resistance (ESR) Requirements table:

1. Crystal shunt capacitance (C0) should be less than or equal to 7 pF.
2. ESR = Negative Resistance/3

Table 6-6. Crystal Equivalent Series Resistance (ESR) Requirements

CRYSTAL FREQUENCY (MHz)	MAXIMUM ESR (Ω) (CL1 = CL2 = 12 pF)	MAXIMUM ESR (Ω) (CL1 = CL2 = 24 pF)
10	55	110
12	50	95
14	50	90
16	45	75
18	45	65
20	45	50

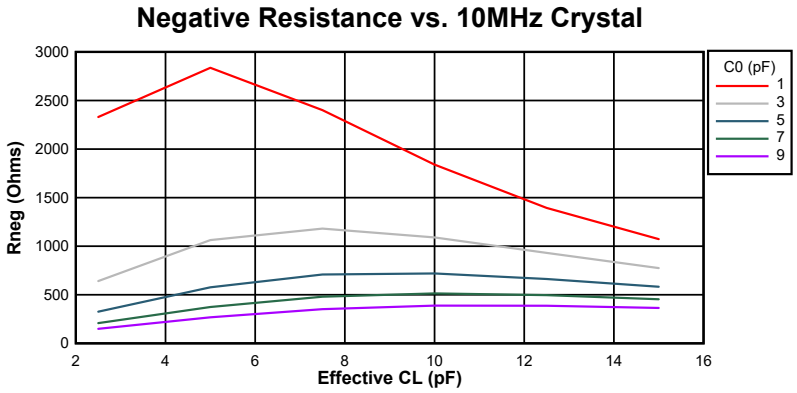

Figure 6-16. Negative Resistance Variation at 10 MHz

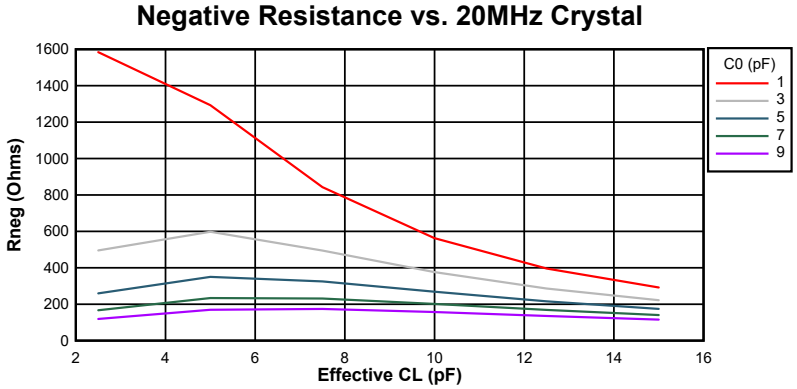

Figure 6-17. Negative Resistance Variation at 20 MHz

Copyright © 2026 Texas Instruments Incorporated

6.14.3.4.7.2 Crystal Oscillator Parameters

		MIN	MAX	UNIT
CL1, CL2	Load capacitance	12	24	pF
C0	Crystal shunt capacitance		7	pF

6.14.3.4.7.3 Crystal Oscillator Electrical Characteristics

over recommended operating conditions (unless otherwise noted)

PARAMETER		TEST CONDITIONS	MIN	TYP	MAX	UNIT
Start-up time[1]	f = 10 MHz	ESR MAX = 110 Ω CL1 = CL2 = 24 pF C0 = 7 pF		4		ms
	f = 20 MHz	ESR MAX = 50 Ω CL1 = CL2 = 24 pF C0 = 7 pF		2		ms
Crystal drive level (DL)					1	mW

(1) Start-up time is dependent on the crystal and tank circuit components. TI recommends that the crystal vendor characterize the application with the chosen crystal.

6.14.3.5 Internal Oscillators

To reduce production board costs and application development time, all devices contain two independent internal oscillators, referred to as INTOSC1 and INTOSC2. By default, INTOSC2 is set as the source for the system reference clock (OSCCLK) and INTOSC1 is set as the backup clock source.

Applications requiring tighter **SCI baud rate matching** can use the SCI baud tuning example (baud_tune_via_uart) available in C2000Ware.

6.14.3.5.1 INTOSC Characteristics

over recommended operating conditions (unless otherwise noted)

PARAMETER		PART	PACKAGE SUFFIX	TEST CONDITIONS	MIN	TYP	MAX	UNIT
f_{INTOSC}	Frequency, INTOSC1 and INTOSC2[1]	All	PDT, PZ, PNA, PM, RSH	-40°C to 125°C	9.82 (–1.8%)	10	10.1 (1.0%)	MHz
f_{INTOSC}	Frequency, INTOSC1 and INTOSC2[1]	All	PDT, PZ, PNA, PM, RSH	-30°C to 90°C	9.86 (–1.4%)	10	10.1 (1.0%)	MHz
f_{INTOSC}	Frequency, INTOSC1 and INTOSC2[1]	All	PDT, PZ, PNA, PM, RSH	-10°C to 85°C	9.9 (–1.0%)	10	10.1 (1.0%)	MHz
$f_{INTOSC-STABILITY}$	Frequency stability at room temperature	All	All	30°C, Nominal VDD		±0.1		%
$t_{INTOSC-ST}$	Start-up and settling time	All	All				20	µs

(1) INTOSC frequency may shift due to the thermal and mechanical stress of solder reflow. A post-reflow bake can restore the unit to its original data sheet performance.

Copyright © 2026 Texas Instruments Incorporated

6.14.4 Flash Parameters

Table 6-7 lists the minimum required Flash wait states with different clock sources and frequencies. Wait state is the value set in register FRDCNTL[RWAIT].

Table 6-7. Minimum Required Flash Wait States with Different Clock Sources and Frequencies

CPUCLK (MHz)	Wait States (FRDCNTL[RWAIT](1))
120 < CPUCLK ≤ 150	3
80 < CPUCLK ≤ 120	2
0 < CPUCLK ≤ 80	1

(1) Minimum required FRDCNTL[RWAIT] is 1, RWAIT=0 is not supported.

The F28P55x devices have a 128-bit prefetch buffer that provides high flash code execution efficiency across wait states. Figure 6-18 and Figure 6-19 illustrate typical efficiency across wait-state settings compared to previous-generation devices with a 64-bit prefetch buffer. Wait-state execution efficiency with a prefetch buffer will depend on how many branches are present in application software. Two examples of linear code and if-then-else code are provided.

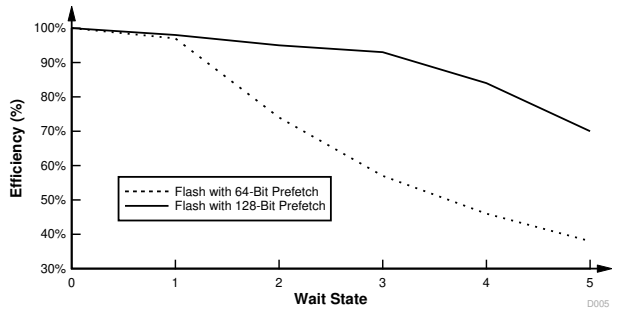

Figure 6-18. Application Code With Heavy 32-Bit Floating-Point Math Instructions

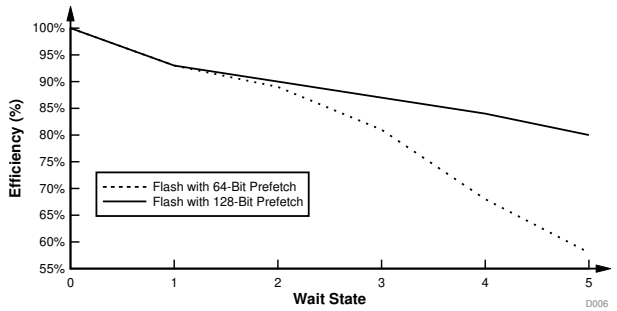

Figure 6-19. Application Code With 16-Bit If-Else Instructions

Note

The Main Array flash programming must be aligned to 64-bit address boundaries and each 64-bit word may only be programmed once per write/erase cycle.

6.14.4.1 Flash Parameters

PARAMETER		MIN	TYP	MAX	UNIT
Program Time(1)	128 data bits + 16 ECC bits		62.5	625	µs
	2KB (Sector)		8	80	ms
Erase Time(2) (3) at < 25 cycles	2KB (Sector)		15	55	ms
	64KB		17	61	ms
	128KB		18	66	ms
	256KB		21	78	ms
Erase Time(2) (3) at 1000 cycles	2KB (Sector)		25	130	ms
	64KB		28	143	ms
	128KB		30	157	ms
	256KB		35	183	ms
Erase Time(2) (3) at 2000 cycles	2KB (Sector)		30	221	ms
	64KB		33	243	ms
	128KB		36	265	ms
	256KB		42	310	ms
Erase Time(2) (3) at 20K cycles	2KB (Sector)		120	1003	ms
	64KB		132	1102	ms
	128KB		145	1205	ms
	256KB		169	1410	ms
N_{wec} Write/Erase Cycles for entire Flash (4)				100000	cycles
$t_{retention}$ Data retention duration at T_J = 85°C		20			years

(1) Program time is at the maximum device frequency. Program time includes overhead of the flash state machine but does not include the time to transfer the following into RAM:
- Code that uses flash API to program the flash
- Flash API itself
- Flash data to be programmed

In other words, the time indicated in this table is applicable after all the required code/data is available in the device RAM, ready for programming. The transfer time will significantly vary depending on the speed of the JTAG debug probe used.
Program time calculation is based on programming 144 bits at a time at the specified operating frequency. Program time includes Program verify by the CPU. The program time does not degrade with write/erase (W/E) cycling, but the erase time does.
Erase time includes Erase verify by the CPU and does not involve any data transfer.

(2) Erase time includes Erase verify by the CPU.

(3) The on-chip flash memory is in an erased state when the device is shipped from TI. As such, erasing the flash memory is not required prior to programming, when programming the device for the first time. However, the erase operation is needed on all subsequent programming operations.

(4) The combined total of bank and sector write/erase cycles is limited to this number

Copyright © 2026 Texas Instruments Incorporated

6.14.5 RAM Specifications

All volatile memory (RAM and ROM) on the F28P55x device is 0 Wait-state for both reads and writes, meaning the memory operates at the same speed as SYSCLK. Table 6-8 and Table 6-9 summarize the characteristics of the different RAM instances on the device.

Table 6-8. RAM Parameters – F28P55xSJ

RAM TYPE	SIZE	FETCH TIME(1) (CYCLES)	READ TIME(1) (CYCLES)	STORE TIME (CYCLES)	BUS WIDTH	NUMBER OF BUSES AVAILABLE	NUMBER OF WAIT STATES	BURST ACCESS
LS RAM	64KB	2	2	1	16/32 bits	2	0	No
M0	2KB	2	2	1	16/32 bits	1	0	No
M1	2KB	2	2	1	16/32 bits	1	0	No
GS RAM	64KB	2	2	1	16/32 bits	3	0	No
CLA-to-CPU Message RAM	256B	2	2	1	16/32 bits	2	0	No
CPU-to-CLA Message RAM	256B	2	2	1	16/32 bits	2	0	No
CLA-to-DMA Message RAM	256B	2	2	1	16/32 bits	3	0	No
DMA-to-CLA Message RAM	256B	2	2	1	16/32 bits	3	0	No

(1) Without arbitration between read/write/fetch. Access completes in 2 cycles; otherwise, arbitration priority (Write/Read/Fetch) is followed.

Table 6-9. RAM Parameters – F28P55xSG

RAM TYPE	SIZE	FETCH TIME(1) (CYCLES)	READ TIME(1) (CYCLES)	STORE TIME (CYCLES)	BUS WIDTH	NUMBER OF BUSES AVAILABLE	NUMBER OF WAIT STATES	BURST ACCESS
LS RAM	64KB	2	2	1	16/32 bits	2	0	No
M0	2KB	2	2	1	16/32 bits	1	0	No
M1	2KB	2	2	1	16/32 bits	1	0	No
GS RAM	32KB	2	2	1	16/32 bits	2	0	No
CLA-to-CPU Message RAM	256B	2	2	1	16/32 bits	2	0	No
CPU-to-CLA Message RAM	256B	2	2	1	16/32 bits	2	0	No
CLA-to-DMA Message RAM	256B	2	2	1	16/32 bits	3	0	No
DMA-to-CLA Message RAM	256B	2	2	1	16/32 bits	3	0	No

(1) Without arbitration between read/write/fetch. Access completes in 2 cycles; otherwise, arbitration priority (Write/Read/Fetch) is followed.

Copyright © 2026 Texas Instruments Incorporated

6.14.6 ROM Specifications

All volatile memory (RAM and ROM) on the F28P55x device is 0 Wait-state for both reads and writes, meaning the memory operates at the same speed as SYSCLK. Table 6-10 summarizes the aspects of the ROM instances on the device.

Table 6-10. ROM Parameters – F28P55xSJ and F28P55xSG

ROM TYPE	SIZE	FETCH TIME(1) (CYCLES)	READ TIME(1) (CYCLES)	STORE TIME (CYCLES)	BUS WIDTH	NUMBER OF BUSES AVAILABLE	NUMBER OF WAIT STATES	BURST ACCESS
Boot ROM + Secure ROM	96KB	2	2	1	16/32 bits	1	0	No
CLA Data ROM	8KB	2	2	1	16/32 bits	2	0	No

(1) Without arbitration between read/write/fetch. Access completes in 2 cycles; otherwise, arbitration priority (Write/Read/Fetch) is followed.

Copyright © 2026 Texas Instruments Incorporated

6.14.7 Emulation/JTAG

The JTAG (IEEE Standard 1149.1-1990 Standard Test Access Port and Boundary Scan Architecture) port has four dedicated pins: TMS, TDI, TDO, and TCK. The cJTAG (IEEE Standard 1149.7-2009 for Reduced-Pin and Enhanced-Functionality Test Access Port and Boundary-Scan Architecture) port is a compact JTAG interface requiring only two pins (TMS and TCK), which allows other device functionality to be muxed to the traditional GPIO35 (TDI) and GPIO37 (TDO) pins.

Typically, no buffers are needed on the JTAG signals when the distance between the MCU target and the JTAG header is smaller than 6 inches (15.24 cm), and no other devices are present on the JTAG chain. Otherwise, each signal should be buffered. Additionally, for most JTAG debug probe operations at 10 MHz, no series resistors are needed on the JTAG signals. However, if high emulation speeds are expected (35 MHz or so), 22-Ω resistors should be placed in series on each JTAG signal.

The PD (Power Detect) pin of the JTAG debug probe header should be connected to the board's 3.3-V supply. Header GND pins should be connected to board ground. TDIS (Cable Disconnect Sense) should also be connected to board ground. The JTAG clock should be looped from the header TCK output pin back to the RTCK input pin of the header (to sense clock continuity by the JTAG debug probe). This MCU does not support the EMU0 and EMU1 signals that are present on 14-pin and 20-pin emulation headers. These signals should always be pulled up at the emulation header through a pair of board pullup resistors ranging from 2.2 kΩ to 4.7 kΩ (depending on the drive strength of the debugger ports). Typically, a 2.2-kΩ value is used.

Header pin $\overline{\text{RESET}}$ is an open-drain output from the JTAG debug probe header that enables board components to be reset through JTAG debug probe commands (available only through the 20-pin header). Figure 6-20 shows how the 14-pin JTAG header connects to the MCU's JTAG port signals. Figure 6-21 shows how to connect to the 20-pin JTAG header. The 20-pin JTAG header pins EMU2, EMU3, and EMU4 are not used and should be grounded.

For more information about hardware breakpoints and watchpoints, see Hardware Breakpoints and Watchpoints in CCS for C2000 devices.

For more information about JTAG emulation, see the *XDS Target Connection Guide*.

Note

JTAG Test Data Input (TDI) is the default mux selection for the pin. The internal pullup is disabled by default. If this pin is used as JTAG TDI, the internal pullup should be enabled or an external pullup added on the board to avoid a floating input. In the cJTAG option, this pin can be used as GPIO.

JTAG Test Data Output (TDO) is the default mux selection for the pin. The internal pullup is disabled by default. The TDO function will be in a tri-state condition when there is no JTAG activity, leaving this pin floating. The internal pullup should be enabled or an external pullup added on the board to avoid a floating GPIO input. In the cJTAG option, this pin can be used as GPIO.

Copyright © 2026 Texas Instruments Incorporated

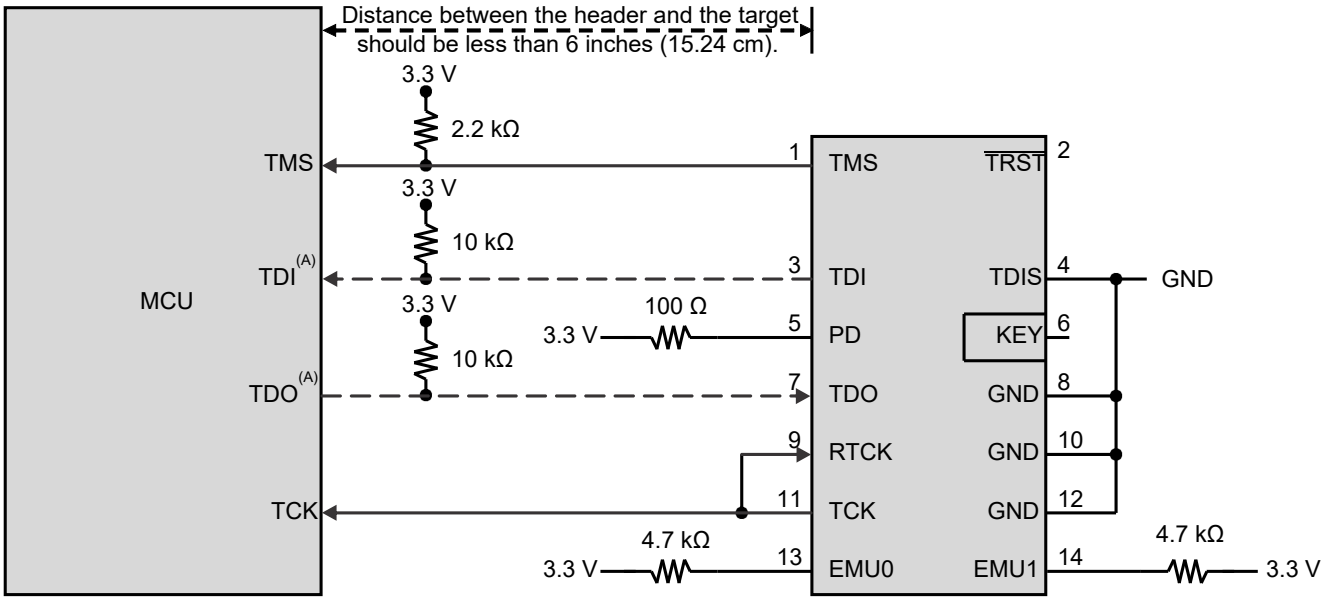

A. TDI and TDO connections are not required for cJTAG option and these pins can be used as GPIOs instead.

Figure 6-20. Connecting to the 14-Pin JTAG Header

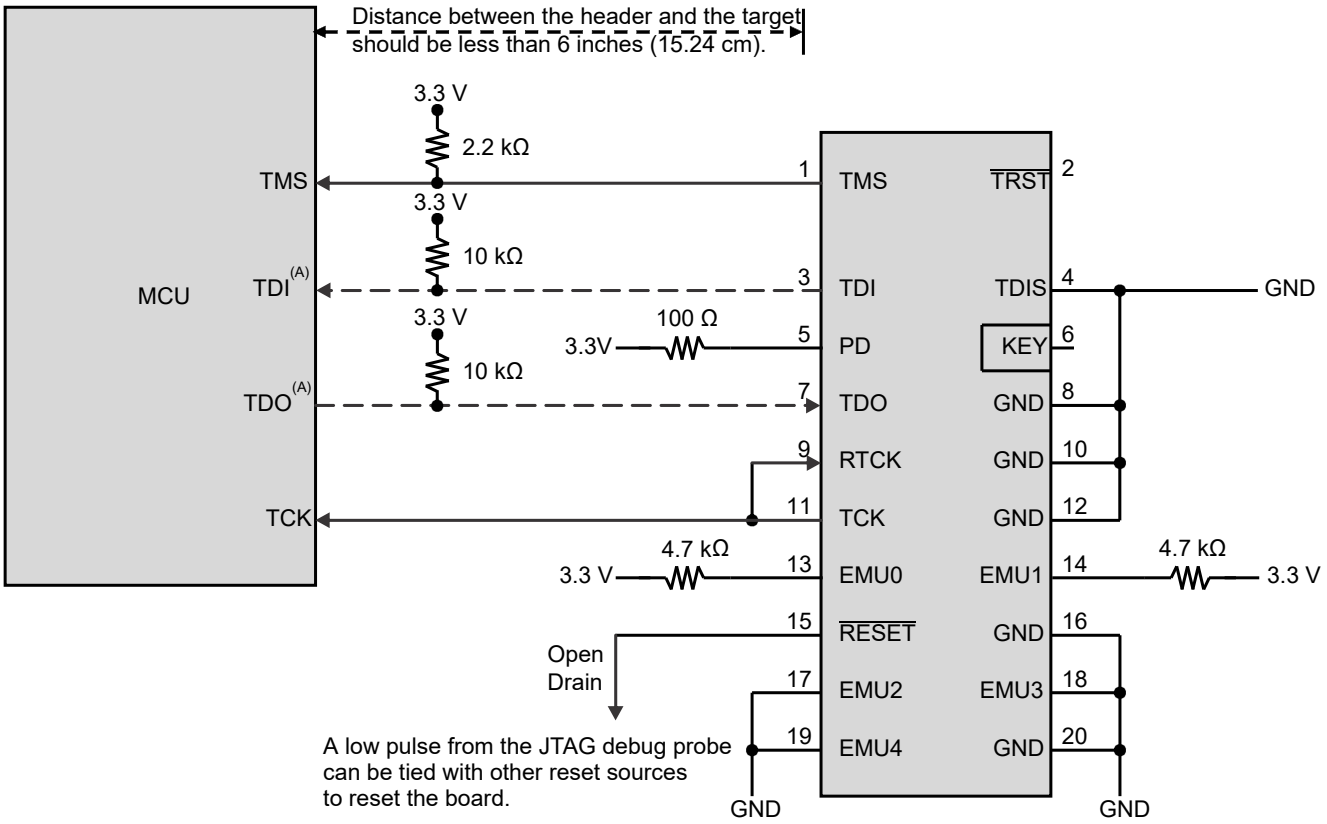

A. TDI and TDO connections are not required for cJTAG option and these pins can be used as GPIOs instead.

Figure 6-21. Connecting to the 20-Pin JTAG Header

Copyright © 2026 Texas Instruments Incorporated

6.14.7.1 JTAG Electrical Data and Timing

6.14.7.1.1 JTAG Timing Requirements

NO.			MIN	MAX	UNIT
1	$t_{c(TCK)}$	Cycle time, TCK	66.66		ns
1a	$t_{w(TCKH)}$	Pulse duration, TCK high (40% of t_c)	26.66		ns
1b	$t_{w(TCKL)}$	Pulse duration, TCK low (40% of t_c)	26.66		ns
3	$t_{su(TDI-TCKH)}$	Input setup time, TDI valid to TCK high	7		ns
	$t_{su(TMS-TCKH)}$	Input setup time, TMS valid to TCK high	7		
4	$t_{h(TCKH-TDI)}$	Input hold time, TDI valid from TCK high	7		ns
	$t_{h(TCKH-TMS)}$	Input hold time, TMS valid from TCK high	7		

6.14.7.1.2 JTAG Switching Characteristics

over recommended operating conditions (unless otherwise noted)

NO.	PARAMETER		MIN	MAX	UNIT
2	$t_{d(TCKL-TDO)}$	Delay time, TCK low to TDO valid	6	20	ns

6.14.7.1.3 JTAG Timing Diagram

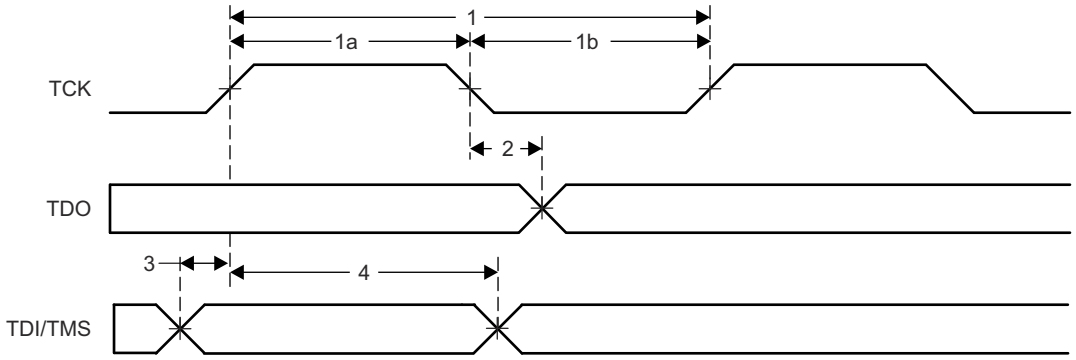

Figure 6-22. JTAG Timing

Copyright © 2026 Texas Instruments Incorporated

6.14.7.2 cJTAG Electrical Data and Timing

6.14.7.2.1 cJTAG Timing Requirements

NO.			MIN	MAX	UNIT
1	$t_{c(TCK)}$	Cycle time, TCK	100		ns
1a	$t_{w(TCKH)}$	Pulse duration, TCK high (40% of t_c)	40		ns
1b	$t_{w(TCKL)}$	Pulse duration, TCK low (40% of t_c)	40		ns
3	$t_{su(TMS-TCKH)}$	Input setup time, TMS valid to TCK high	7		ns
	$t_{su(TMS-TCKL)}$	Input setup time, TMS valid to TCK low	7		ns
4	$t_{h(TCKH-TMS)}$	Input hold time, TMS valid from TCK high	2		ns
	$t_{h(TCKL-TMS)}$	Input hold time, TMS valid from TCK low	2		ns

6.14.7.2.2 cJTAG Switching Characteristics

over recommended operating conditions (unless otherwise noted)

NO.	PARAMETER		MIN	MAX	UNIT
2	$t_{d(TCKL-TMS)}$	Delay time, TCK low to TMS valid	6	20	ns
5	$t_{dis(TCKH-TMS)}$	Delay time, TCK high to TMS disable		20	ns

6.14.7.2.3 cJTAG Timing Diagram

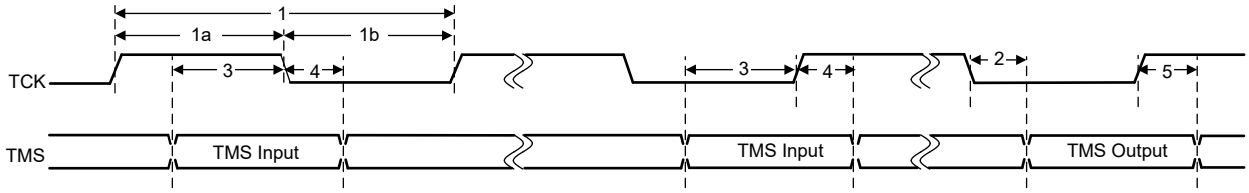

Figure 6-23. cJTAG Timing

Copyright © 2026 Texas Instruments Incorporated

6.14.8 GPIO Electrical Data and Timing

The peripheral signals are multiplexed with general-purpose input/output (GPIO) signals. On reset, GPIO pins are configured as inputs. For specific inputs, the user can also select the number of input qualification cycles to filter unwanted noise glitches.

Many GPIOs have mux options for Output X-BAR which allows an assortment of internal signals to be routed to a GPIO. All of the GPIOs are connected to each Input X-BAR which can route the GPIO's high or low state to different IP blocks, such as the ADCs, eCAPs, ePWMs, and external interrupts. For more details, see the X-BAR chapter in the *TMS320F28P55x Real-Time Microcontrollers Technical Reference Manual*.

6.14.8.1 GPIO – Output Timing

6.14.8.1.1 General-Purpose Output Switching Characteristics

over recommended operating conditions (unless otherwise noted)

PARAMETER			MIN	MAX	UNIT
$t_{r(GPO)}$	Rise time, GPIO switching low to high	All GPIOs		6(1)	ns
$t_{f(GPO)}$	Fall time, GPIO switching high to low	All GPIOs		6(1)	ns
t_{fGPO}	Toggling frequency, GPIO pins	All GPIOs not listed below		50	MHz
		GPIO 2, 3, 9, and 32		40	
		GPIO 23 and 41		25	

(1) Rise time and fall time vary with load. These values assume a 6-pF load.

6.14.8.1.2 General-Purpose Output Timing Diagram

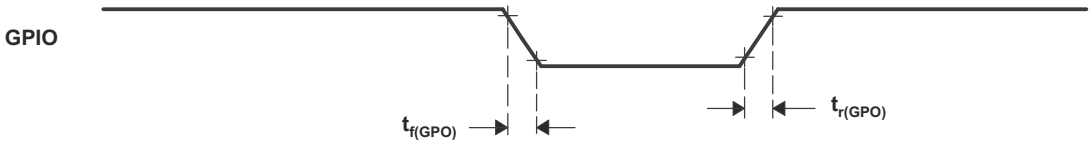

Figure 6-24. General-Purpose Output Timing

6.14.8.2 GPIO – Input Timing

6.14.8.2.1 General-Purpose Input Timing Requirements

			MIN	MAX	UNIT
$t_{w(SP)}$	Sampling period	QUALPRD = 0	$1t_{c(SYSCLK)}$		cycles
		QUALPRD ≠ 0	$2t_{c(SYSCLK)}$ * QUALPRD		cycles
$t_{w(IQSW)}$	Input qualifier sampling window		$t_{w(SP)}$ * (n(1) – 1)		cycles
$t_{w(GPI)}$ (2)	Pulse duration, GPIO low/high	Synchronous mode	$2t_{c(SYSCLK)}$		cycles
		With input qualifier	$t_{w(IQSW)}$ + $t_{w(SP)}$ + $1t_{c(SYSCLK)}$		cycles

(1) "n" represents the number of qualification samples as defined by GPxQSELn register.
(2) For $t_{w(GPI)}$, pulse width is measured from V_{IL} to V_{IL} for an active low signal and V_{IH} to V_{IH} for an active high signal.

6.14.8.2.2 Sampling Mode

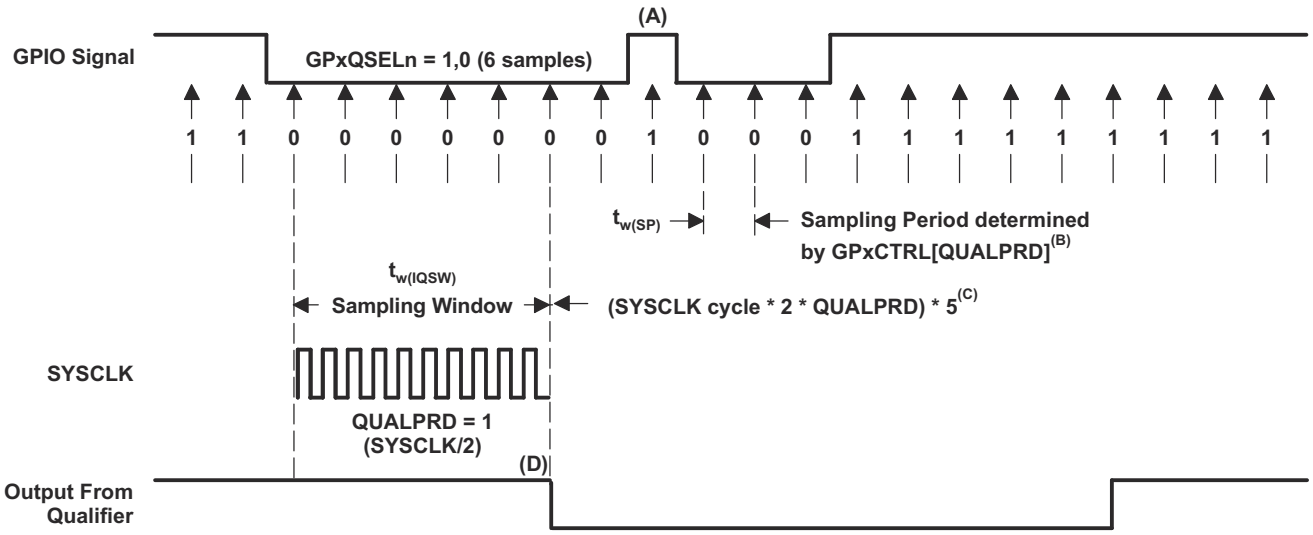

A. This glitch will be ignored by the input qualifier. The QUALPRD bit field specifies the qualification sampling period. It can vary from 00 to 0xFF. If QUALPRD = 00, then the sampling period is 1 SYSCLK cycle. For any other value "n", the qualification sampling period in 2n SYSCLK cycles (that is, at every 2n SYSCLK cycles, the GPIO pin will be sampled).

B. The qualification period selected through the GPxCTRL register applies to groups of eight GPIO pins.

C. The qualification block can take either three or six samples. The GPxQSELn Register selects which sample mode is used.

D. In the example shown, for the qualifier to detect the change, the input should be stable for 10 SYSCLK cycles or greater. In other words, the inputs should be stable for (5 × QUALPRD × 2) SYSCLK cycles. This would ensure 5 sampling periods for detection to occur. Because external signals are driven asynchronously, an 13-SYSCLK-wide pulse ensures reliable recognition.

Figure 6-25. Sampling Mode

Copyright © 2026 Texas Instruments Incorporated

6.14.8.3 Sampling Window Width for Input Signals

The following section summarizes the sampling window width for input signals for various input qualifier configurations.

Sampling frequency denotes how often a signal is sampled with respect to SYSCLK.

Sampling frequency = SYSCLK/(2 × QUALPRD), if QUALPRD ≠ 0

Sampling frequency = SYSCLK, if QUALPRD = 0

Sampling period = SYSCLK cycle × 2 × QUALPRD, if QUALPRD ≠ 0

In the previous equations, SYSCLK cycle indicates the time period of SYSCLK.

Sampling period = SYSCLK cycle, if QUALPRD = 0

In a given sampling window, either 3 or 6 samples of the input signal are taken to determine the validity of the signal. This is determined by the value written to GPxQSELn register.

Case 1:

Qualification using 3 samples

Sampling window width = (SYSCLK cycle × 2 × QUALPRD) × 2, if QUALPRD ≠ 0

Sampling window width = (SYSCLK cycle) × 2, if QUALPRD = 0

Case 2:

Qualification using 6 samples

Sampling window width = (SYSCLK cycle × 2 × QUALPRD) × 5, if QUALPRD ≠ 0

Sampling window width = (SYSCLK cycle) × 5, if QUALPRD = 0

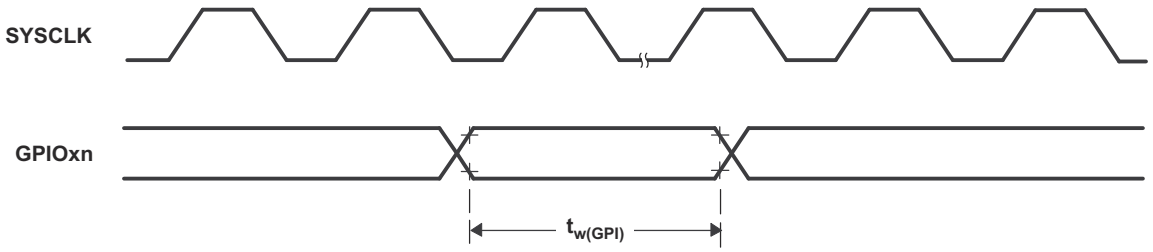

Figure 6-26. General-Purpose Input Timing

6.14.9 Interrupts

The C28x CPU has fourteen peripheral interrupt lines. Two of them (INT13 and INT14) are connected directly to CPU timers 1 and 2, respectively. The remaining twelve are connected to peripheral interrupt signals through the enhanced Peripheral Interrupt Expansion (ePIE) module. The ePIE multiplexes up to sixteen peripheral interrupts into each CPU interrupt line. It also expands the vector table to allow each interrupt to have its own ISR. This allows the CPU to support a large number of peripherals.

An interrupt path is divided into three stages—the peripheral, the ePIE, and the CPU. Each stage has its own enable and flag registers. This system allows the CPU to handle one interrupt while others are pending, implement and prioritize nested interrupts in software, and disable interrupts during certain critical tasks.

Figure 6-27 shows the interrupt architecture for this device.

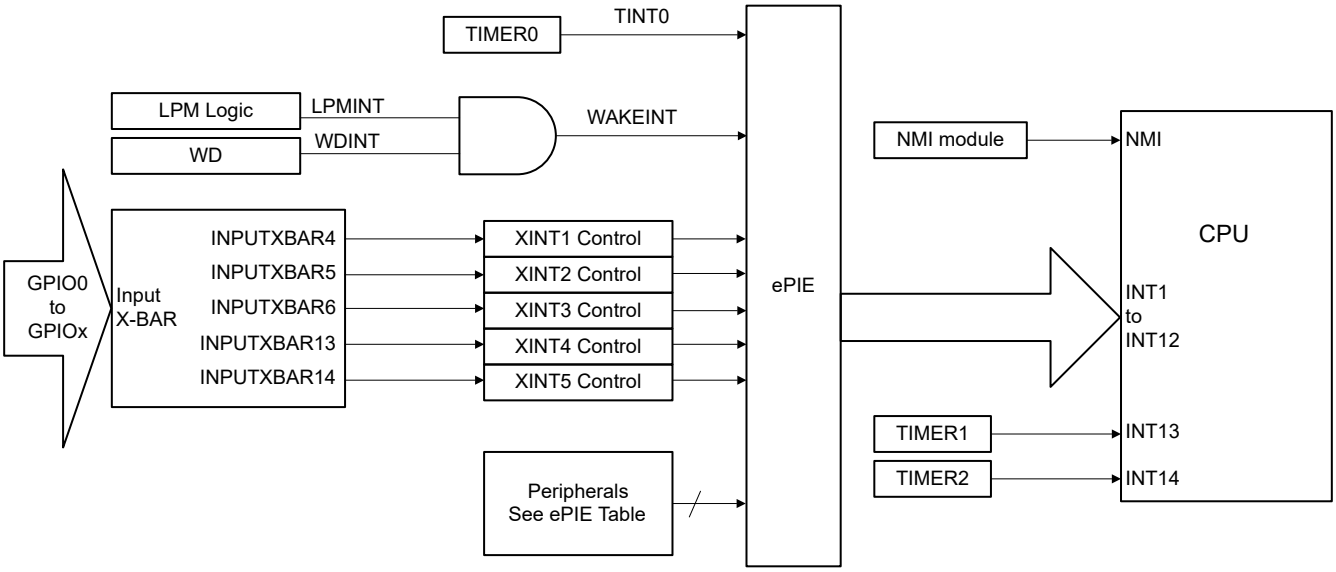

Figure 6-27. Device Interrupt Architecture

Copyright © 2026 Texas Instruments Incorporated

6.14.9.1 External Interrupt (XINT) Electrical Data and Timing

For an explanation of the input qualifier parameters, see the *General-Purpose Input Timing Requirements* table.

6.14.9.1.1 External Interrupt Timing Requirements

			MIN	MAX	UNIT
$t_{w(INT)}$	Pulse duration, INT input low/high	Synchronous	$2t_{c(SYSCLK)}$		cycles
		With qualifier	$t_{w(IQSW)} + t_{w(SP)} + 1t_{c(SYSCLK)}$		cycles

6.14.9.1.2 External Interrupt Switching Characteristics

over recommended operating conditions (unless otherwise noted)

PARAMETER		MIN	MAX	UNIT
$t_{d(INT)}$	Delay time, INT low/high to interrupt-vector fetch[1]	$t_{w(IQSW)} + 14t_{c(SYSCLK)}$	$t_{w(IQSW)} + t_{w(SP)} + 14t_{c(SYSCLK)}$	cycles

(1) This assumes that the ISR is in a single-cycle memory.

6.14.9.1.3 External Interrupt Timing

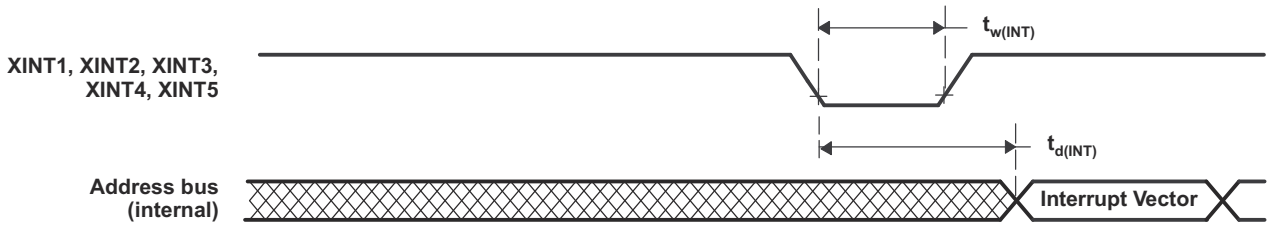

Figure 6-28. External Interrupt Timing

6.14.10 Low-Power Modes

This device has HALT, IDLE and STANDBY as clock-gating low-power modes.

Further details, as well as the entry and exit procedure, for all of the low-power modes can be found in the *Low-Power Modes* section of the *TMS320F28P55x Real-Time Microcontrollers Technical Reference Manual*.

6.14.10.1 Clock-Gating Low-Power Modes

IDLE and HALT modes on this device are similar to those on other C28x devices. Table 6-11 describes the effect on the system when any of the clock-gating low-power modes are entered.

Table 6-11. Effect of Clock-Gating Low-Power Modes on the Device

MODULES/ CLOCK DOMAIN	IDLE	STANDBY	HALT
SYSCLK	Active	Gated	Gated
CPUCLK	Gated	Gated	Gated
Clock to modules connected to PERx.SYSCLK	Active	Gated	Gated
WDCLK	Active	Active	Gated if CLKSRCCTL1.WDHALTI = 0
PLL	Powered	Powered	Software must power down PLL before entering HALT.
INTOSC1	Powered	Powered	Powered down if CLKSRCCTL1.WDHALTI = 0
INTOSC2	Powered	Powered	Powered down if CLKSRCCTL1.WDHALTI = 0
Flash[1]	Powered	Powered	Powered
XTAL[2]	Powered	Powered	Powered

(1) The Flash module is not powered down by hardware in any LPM. It may be powered down using software if required by the application.

Copyright © 2026 Texas Instruments Incorporated

(2) The XTAL is not powered down by hardware in any LPM. It may be powered down by software setting the XTALCR.OSCOFF bit to 1. This can be done at any time during the application if the XTAL is not required.

6.14.10.2 Low-Power Mode Wake-up Timing

For an explanation of the input qualifier parameters, see the *General-Purpose Input Timing Requirements* table.

6.14.10.2.1 IDLE Mode Timing Requirements

			MIN	MAX	UNIT
$t_{w(WAKE)}$	Pulse duration, external wake-up signal	Without input qualifier	$2t_{c(SYSCLK)}$		cycles
		With input qualifier	$2t_{c(SYSCLK)} + t_{w(IQSW)}$		

6.14.10.2.2 IDLE Mode Switching Characteristics

over recommended operating conditions (unless otherwise noted)

PARAMETER			TEST CONDITIONS	MIN	MAX	UNIT
$t_{d(WAKE-IDLE)}$	Delay time, external wake signal to program execution resume(1)	From Flash (active state)	Without input qualifier		$40t_{c(SYSCLK)}$	cycles
			With input qualifier		$40t_{c(SYSCLK)} + t_{w(WAKE)}$	cycles
		From RAM	Without input qualifier		$25t_{c(SYSCLK)}$	cycles
			With input qualifier		$25t_{c(SYSCLK)} + t_{w(WAKE)}$	cycles

(1) This is the time taken to begin execution of the instruction that immediately follows the IDLE instruction. Execution of an ISR (triggered by the wake-up signal) involves additional latency.

6.14.10.2.3 IDLE Entry and Exit Timing Diagram

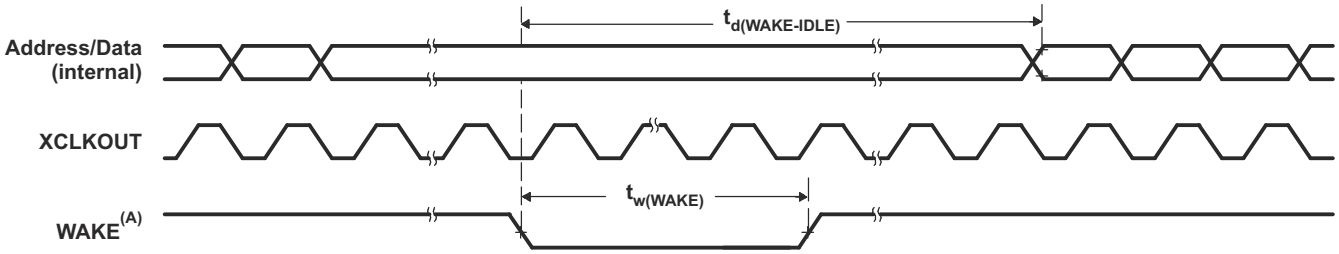

A. WAKE can be any enabled interrupt, $\overline{\text{WDINT}}$ or XRSn. After the IDLE instruction is executed, a delay of five OSCCLK cycles (minimum) is needed before the wake-up signal could be asserted.

Figure 6-29. IDLE Entry and Exit Timing Diagram

Copyright © 2026 Texas Instruments Incorporated

6.14.10.2.4 STANDBY Mode Timing Requirements

			MIN	MAX	UNIT
$t_{w(WAKE-INT)}$	Pulse duration, external wake-up signal	QUALSTDBY = 0 | $2t_{c(OSCCLK)}$	$3t_{c(OSCCLK)}$		cycles
		QUALSTDBY > 0 | (2 + QUALSTDBY)$t_{c(OSCCLK)}$ (1)	(2 + QUALSTDBY) * $t_{c(OSCCLK)}$		

(1) QUALSTDBY is a 6-bit field in the LPMCR register.

6.14.10.2.5 STANDBY Mode Switching Characteristics

over recommended operating conditions (unless otherwise noted)

PARAMETER		TEST CONDITIONS	MIN	MAX	UNIT
$t_{d(IDLE-XCOS)}$	Delay time, IDLE instruction executed to XCLKOUT stop			$16t_{c(INTOSC1)}$	cycles
$t_{d(WAKE-STBY)}$	Delay time, external wake signal to program execution resume(1)	Wakeup from flash (Flash module in active state)		$175t_{c(SYSCLK)}$ + $t_{w(WAKE-INT)}$	cycles
$t_{d(WAKE-STBY)}$		Wakeup from RAM		$3t_{c(OSC)}$ + $15t_{c(SYSCLK)}$ + $t_{w(WAKE-INT)}$	cycles

(1) This is the time taken to begin execution of the instruction that immediately follows the IDLE instruction. Execution of an ISR (triggered by the wake-up signal) involves additional latency.

6.14.10.2.6 STANDBY Entry and Exit Timing Diagram

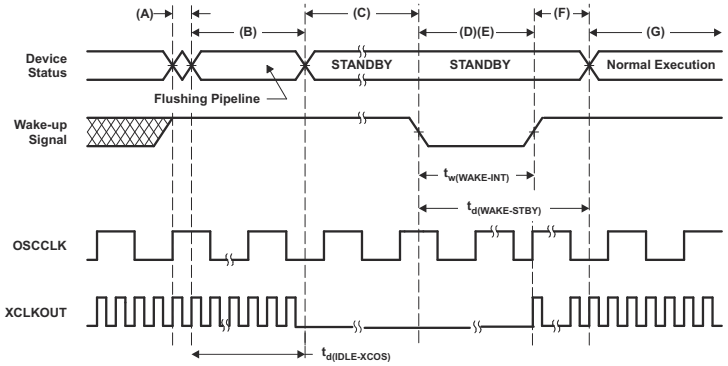

A. IDLE instruction is executed to put the device into STANDBY mode.
B. The LPM block responds to the STANDBY signal, SYSCLK is held for a maximum 16 INTOSC1 clock cycles before being turned off. This delay enables the CPU pipeline and any other pending operations to flush properly.
C. Clock to the peripherals are turned off. However, the PLL and watchdog are not shut down. The device is now in STANDBY mode. After the IDLE instruction is executed, a delay of five OSCCLK cycles (minimum) is needed before the wake-up signal could be asserted.
D. The external wake-up signal is driven active.
E. The wake-up signal fed to a GPIO pin to wake up the device must meet the minimum pulse width requirement. Furthermore, this signal must be free of glitches. If a noisy signal is fed to a GPIO pin, the wake-up behavior of the device will not be deterministic and the device may not exit low-power mode for subsequent wake-up pulses.
F. After a latency period, the STANDBY mode is exited.
G. Normal execution resumes. The device will respond to the interrupt (if enabled).

Figure 6-30. STANDBY Entry and Exit Timing Diagram

Copyright © 2026 Texas Instruments Incorporated

6.14.10.2.7 HALT Mode Timing Requirements

		MIN	MAX	UNIT
$t_{w(WAKE-GPIO)}$	Pulse duration, GPIO wake-up signal(1)	t_{oscst} + $2t_{c(OSCCLK)}$		cycles
$t_{w(WAKE-XRS)}$	Pulse duration, $\overline{XRS}$ wake-up signal(1)	t_{oscst} + $8t_{c(OSCCLK)}$		cycles

(1) For applications using X1/X2 for OSCCLK, the user must characterize their specific oscillator start-up time as it is dependent on circuit/layout external to the device. See *Crystal Oscillator (XTAL)* section for more information. For applications using INTOSC1 or INTOSC2 for OSCCLK, see the Internal Oscillators section for t_{oscst}. Oscillator start-up time does not apply to applications using a single-ended crystal on the X1 pin, as it is powered externally to the device.

6.14.10.2.8 HALT Mode Switching Characteristics

over recommended operating conditions (unless otherwise noted)

PARAMETER		MIN	MAX	UNIT
$t_{d(IDLE-XCOS)}$	Delay time, IDLE instruction executed to XCLKOUT stop		$16t_{c(INTOSC1)}$	cycles
$t_{d(WAKE-HALT)}$	Delay time, external wake signal end to CPU1 program execution resume			cycles
	Wakeup from Flash - Flash module in active state		$75t_{c(OSCCLK)}$	
	Wakeup from RAM		$75t_{c(OSCCLK)}$	

6.14.10.2.9 HALT Entry and Exit Timing Diagram

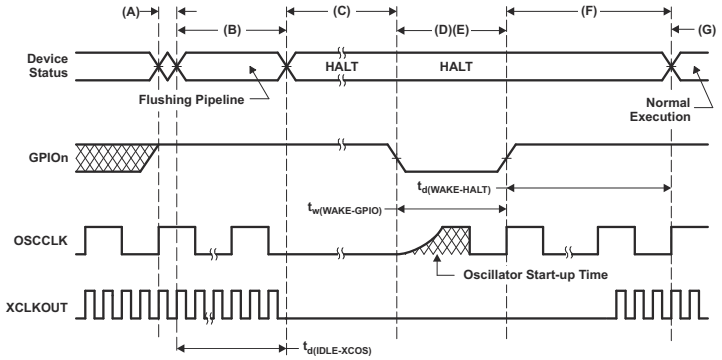

A. IDLE instruction is executed to put the device into HALT mode.

B. The LPM block responds to the HALT signal, SYSCLK is held for a maximum 16 INTOSC1 clock cycles before being turned off. This delay enables the CPU pipeline and any other pending operations to flush properly.

C. Clocks to the peripherals are turned off and the PLL is shut down. If a quartz crystal or ceramic resonator is used as the clock source, the internal oscillator is shut down as well. The device is now in HALT mode and consumes very little power. It is possible to keep the internal oscillators (INTOSC1 and INTOSC2) and the watchdog alive in HALT MODE. This is done by writing 1 to CLKSRCCTL1.WDHALTI. After the IDLE instruction is executed, a delay of five OSCCLK cycles (minimum) is needed before the wake-up signal could be asserted.

D. When the GPIOn pin (used to bring the device out of HALT) is driven low, the oscillator is turned on and the oscillator wake-up sequence is initiated. The GPIO pin should be driven high only after the oscillator has stabilized. This enables the provision of a clean clock signal during the PLL lock sequence. Because the falling edge of the GPIO pin asynchronously begins the wake-up procedure, care should be taken to maintain a low noise environment before entering and during HALT mode.

E. The wake-up signal fed to a GPIO pin to wake up the device must meet the minimum pulse width requirement. Furthermore, this signal must be free of glitches. If a noisy signal is fed to a GPIO pin, the wake-up behavior of the device will not be deterministic and the device may not exit low-power mode for subsequent wake-up pulses.

F. When CLKIN to the core is enabled, the device will respond to the interrupt (if enabled), after some latency. The HALT mode is now exited.

G. Normal operation resumes.

Copyright © 2026 Texas Instruments Incorporated

H. The user must relock the PLL upon HALT wakeup to ensure a stable PLL lock.

Figure 6-31. HALT Entry and Exit Timing Diagram

6.15 Analog Peripherals

The analog subsystem module is described in this section.

The analog modules on this device include the Analog-to-Digital Converter (ADC), temperature sensor, Comparator Subsystem (CMPSS), Programmable Gain Amplifier (PGA), and buffered Digital-to-Analog Converter (DAC).

The analog subsystem has the following features:

- Flexible voltage references
  - The ADCs have 3 reference options:
    1. Internal Reference: In this mode the high reference voltage is generated on-chip and brought to the V_{REFHI} pin for capacitive buffering. The V_{REFLO} pin acts as the low side reference and is normally connected to VSSA. There is an option through a HW register bit to configure the ADC range as either 2.5V or 3.3V.
    2. External Reference: In this mode the high reference voltage is supplied to the device from the V_{REFHI} pin from an external source. The V_{REFLO} pin acts as the low side reference and is normally connected to VSSA. There is an option through a HW register bit to configure the ADC range as either 1x V_{REFHI} or 2x V_{REFHI}.
    3. VDDA/VSSA Reference: In this mode the high and low references are sourced from the VDDA/VSSA analog power supplies. If all ADCs are using this mode the V_{REFHI}/V_{REFLO}pins can be used as ADC input channels according to the analog pin signal descriptions
  - The buffered DAC is referenced to V_{REFHI} and VSSA. At least one ADC must be using either the internal reference or external reference mode for the DAC to operate correctly.
  - The comparator DACs are referenced to VDDA and VSSA.
- Flexible pin usage
  - Buffered DAC outputs, comparator subsystem inputs, and digital inputs (AIOs)/outputs (AGPIOs) are multiplexed with ADC inputs
  - Internal connection to V_{REFLO} on all ADCs for offset self-calibration

6.15.1 Block Diagram

The following analog subsystem block diagrams show the connections between the different integrated analog modules to the device pins. These pins fall into two categories: analog module inputs/outputs and reference pins.

The reference pins, VREFHI and VREFLO, can be used to supply an external voltage reference to the associated ADCs. VREFHI can also be used to supply the voltage reference to buffered DAC. The choice of reference is configurable per module for each CMPSS or buffered DAC; the selection is made using the module's configuration registers.

Some analog pins support digital functionality through muxed AIOs and AGPIOs. AIOs only support digital input functionality, while AGPIOs support full digital input and output functionality.

The following notes apply to all packages:

- Not all analog pins are available on all devices. See the device data manual to determine which pins are available.
- See the device data manual to determine the allowable voltage range for VREFHI and VREFLO.
- An external capacitor is required on the VREFHI pins. See the device data manual for the specific value required.

Figure 6-32 shows the Analog Subsystem Block Diagram for the 128-/80-pin TQFP, the 64-pin LQFP, and the 56-pin VQFN.

Figure 6-33 shows the Analog Subsystem Block Diagram for the 100-pin LQFP.

Figure 6-34 shows the general overview of the analog group connections.

Copyright © 2026 Texas Instruments Incorporated

The analog pins and internal connections are given in Analog Pins and Internal Connections. Analog Signal Descriptions lists descriptions of analog signals.

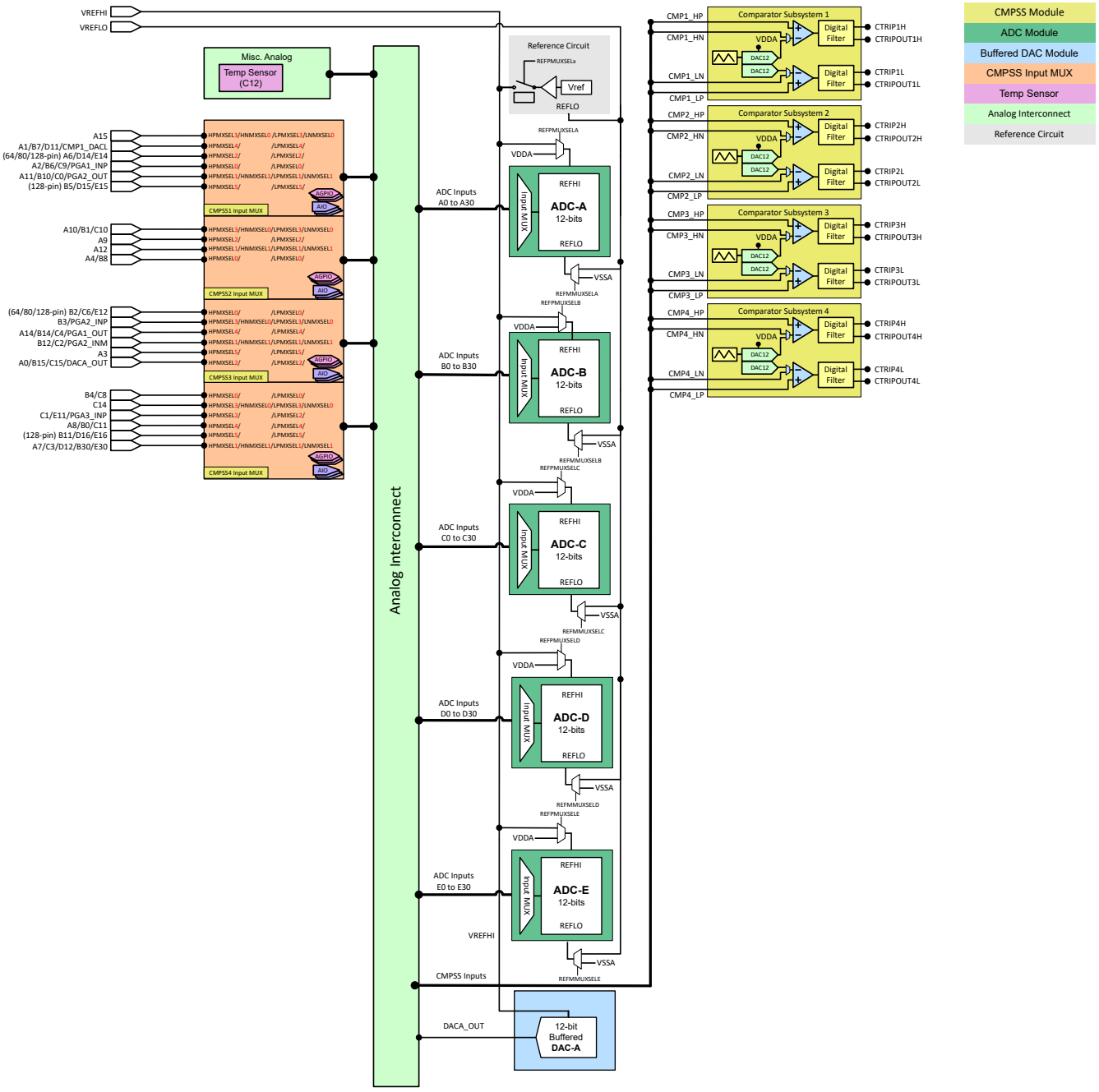

Figure 6-32. Analog Subsystem Block Diagram (128-/80-/64-/56-Pin Packages)

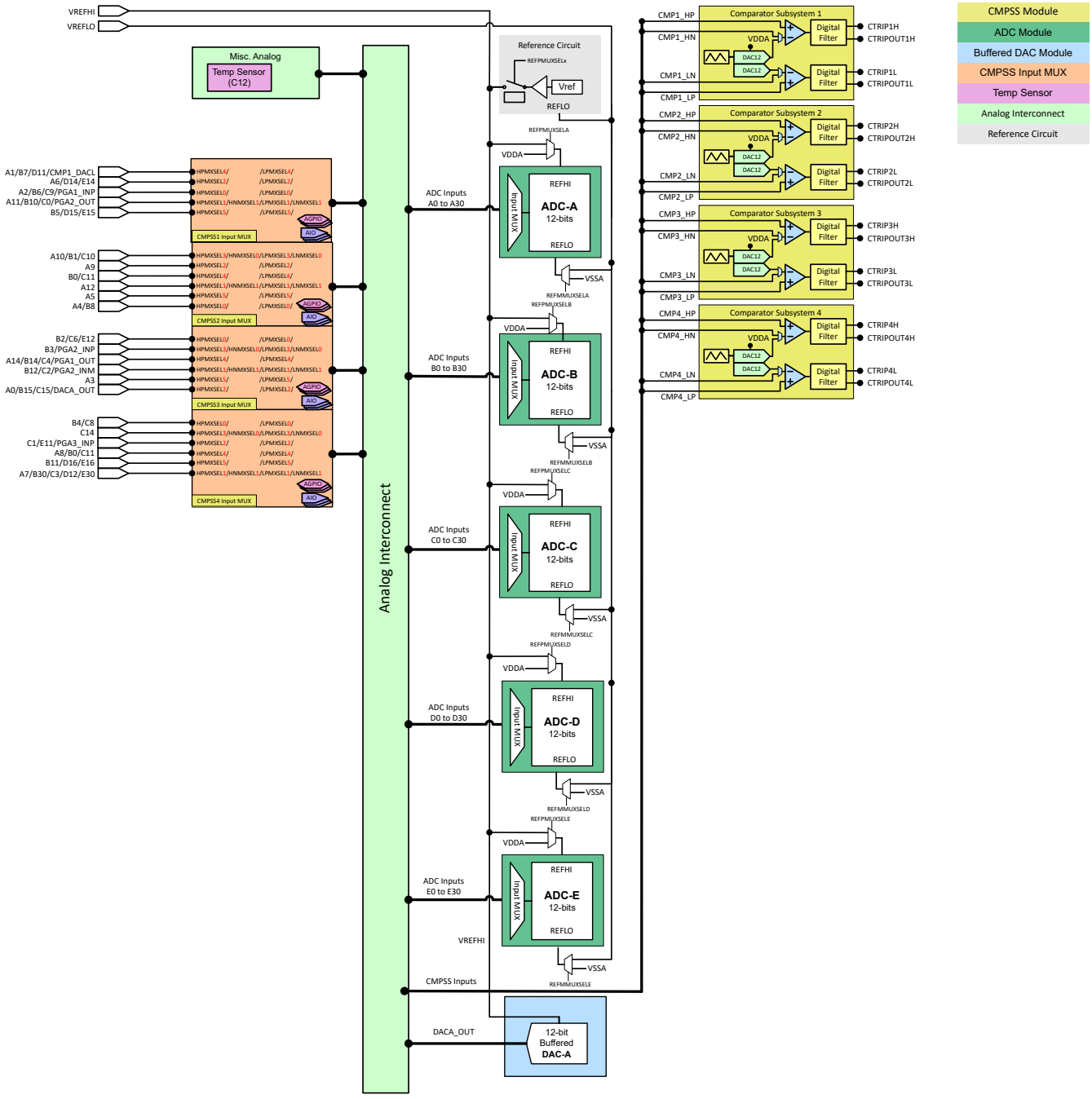

Figure 6-33. Analog Subsystem Block Diagram (100-Pin Package)

Copyright © 2026 Texas Instruments Incorporated

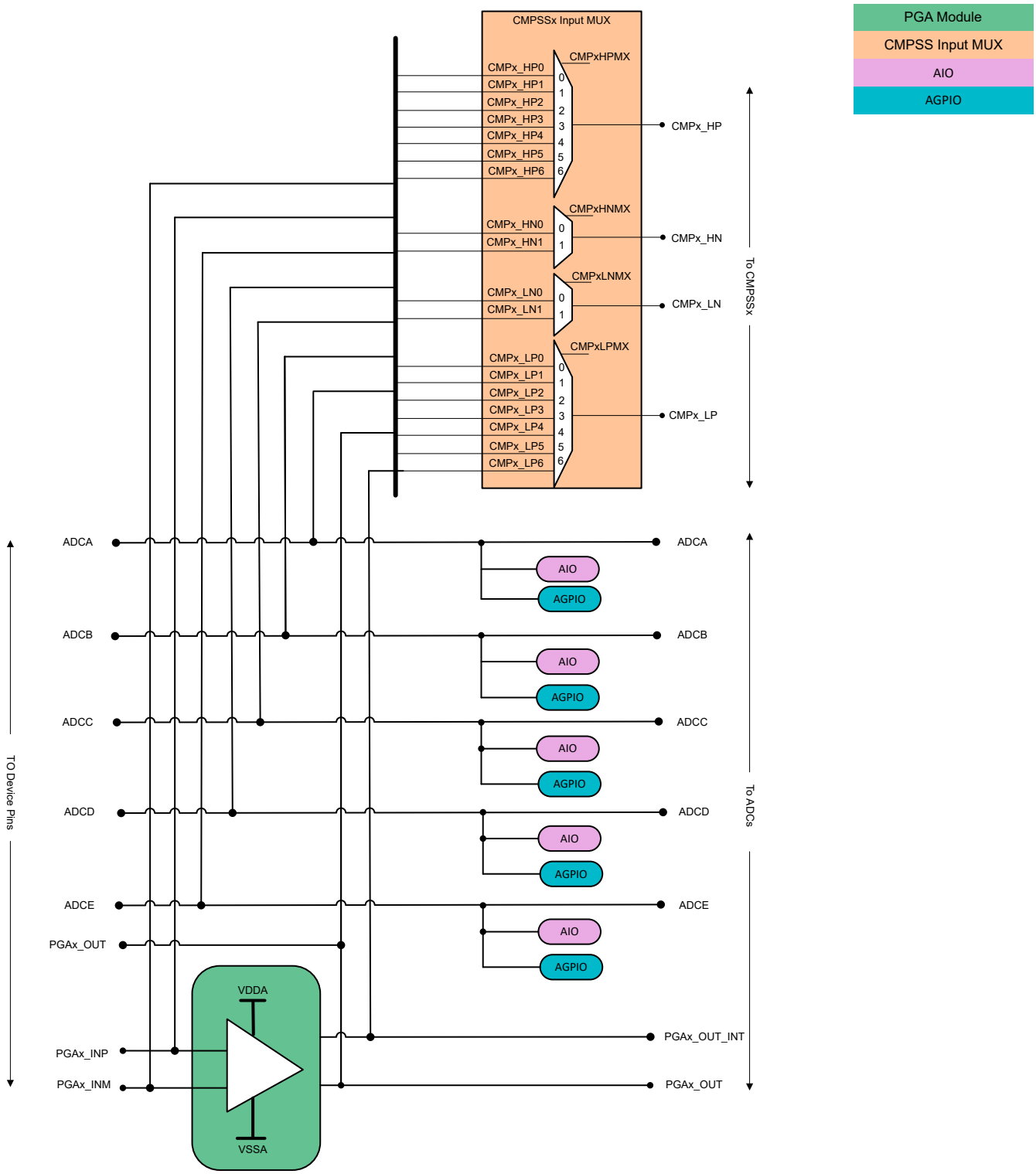

Figure 6-34. Analog Group Connections

Input connections to the CMPSS modules are selectable through a programmable input mux. Figure 6-34 demonstrates the connection between the input MUX of CMPSS modules, PGA modules, and ADC modules. Table 6-12 shows the mapping of ADC input signals and PGA input and output signals to CMPSS mux inputs.

- To configure the CMPx_HP input mux for CMPSSx, write to the CMPxHPMXSEL field in the CMPHPMXSEL analog subsystem register.
- To configure the CMPx_HN input mux for CMPSSx, write to the CMPxHNMXSEL field in the CMPHNMXSEL analog subsystem register.
- To configure the CMPx_LP input mux for CMPSSx, write to the CMPxLPMXSEL field in the CMPLPMXSEL analog subsystem register.
- To configure the CMPx_LN input mux for CMPSSx, write to the CMPxLNMXSEL field in the CMPLNMXSEL analog subsystem register.

Table 6-12. CMPSS Input Mux Options

CMPSSx Input MUX	CMP1	CMP2	CMP3	CMP4
HP0	A2, B6, C9, PGA1_INP	A4, B8	B2,C6, E12	B4, C8
HP1	A11, B10, C0, PGA2_OUT	A12	B12, C2, PGA2_INM	A7, C3, D12, B30, E30,
HP2	A6, D14, E14(3)	A9	A0, B15, C15, DACA_OUT	C1, E11, PGA3_INP
HP3	A15(2)	A10, B1, C10	B3, PGA2_INP	C14
HP4	A1, B7, D11, CMP1_DACL	B0, C11(1)	A14, B14, C4, PGA1_OUT	A8
				B0, C11(2)
HP5	B5, D15, E15(4)	A5(1)	A3	B11, D16, E16(4)
HP6	PGA1_OUT_INT	PGA3_OUT_INT	PGA2_OUT_INT	
HP7		TEMP SENSOR		
HN0	A15(2)	A10, B1, C10	B3, PGA2_INP	C14
HN1	A11, B10, C0, PGA2_OUT	A12	B12, C2, PGA2_INM	A7, B30, C3, D12, E30
LP0	A2, B6, C9, PGA1_INP	A4, B8	B2, C6, E12	B4, C8
LP1	A11, B10, C0, PGA2_OUT	A12	B12, C2, PGA2_INM	A7, B30, C3, D12, E30
LP2	A6, D14, E14(3)	A9	A0, B15, C15, DACA_OUT	C1, E11, PGA3_INP
LP3	A15(2)	A10, B1, C10	B3, PGA2_INP	C14
LP4	A1, B7, D11, CMP1_DACL	B0, C11(1)	A14, B14, C4, PGA1_OUT	A8
				B0, C11(2)
LP5	B5, D15, E15(4)	A5(1)	A3	B11, D16, E16(4)
LP6	PGA1_OUT_INT	PGA3_OUT_INT	PGA2_OUT_INT	
LN0	A15	A10, B1, C10	B3, PGA2_INP	C14
LN1	A11, B10, C0, PGA2_OUT	A12	B12, C2, PGA2_INM	A7, C3, D12, B30,E30

(1) These MUX options are available only on 100 QFP package.
(2) This MUX option is available only on 56 QFN, 64 QFP, 80 QFP, and 128 QFP packages.
(3) This MUX option is available only on 64 QFP, 80 QFP, 100 QFP, and 128 QFP packages.
(4) This MUX option is available only on 100 QFP and 128 QFP packages.

Copyright © 2026 Texas Instruments Incorporated

6.15.2 Analog Pins and Internal Connections

Table 6-13. Analog Pins and Internal Connections

Pin Name	Pins/Package					ADC					DAC	PGA	Comparator Subsystem (MUX)				AIO Input/ AGPIO
	128 QFP	100 QFP	80 QFP	64 QFP	56 QFN	A	B	C	D	E			High Positive	High Negative	Low Positive	Low Negative	
VREFHI	31 32	24 25	20	16	14	-	-	-	D20	E20							
VREFLO	33 34	26 27	21	17	15	A13	B13	C13	D13	E13							
Analog Group 1													**CMP1**				
A6/D14/E14	18	14	10	6	-	A6	-	-	D14	E14			CMP1 (HPMXSEL=2)	-	CMP1 (LPMXSEL=2)	-	AGPIO228 (3)
A2/B6/C9/PGA1_INP	21	17	13	9	7	A2	B6	C9	-	-		PGA1_INP	CMP1 (HPMXSEL=0)	-	CMP1 (LPMXSEL=0)	-	AGPIO224 (3)
A15	22	-	14	10	8	A15	-	-	-	-			CMP1 (HPMXSEL=3)	CMP1 (HNMXSEL=0)	CMP1 (LPMXSEL=3)	CMP1 (LNMXSEL=0)	AGPIO233 (3)
B9/C7/PGA1_INM		18				-	B9	C7				PGA1_INM					
A11/B10/C0/PGA2_OUT	27	20	16	12	10	A11	B10	C0	-	-		PGA2_OUT	CMP1 (HPMXSEL=1)	CMP1 (HNMXSEL=1)	CMP1 (LPMXSEL=1)	CMP1 (LNMXSEL=1)	AIO237
A1/B7/D11/CMP1_DACL	29	22	18	14	12	A1	B7	-	D11	-	CMP1_DACL		CMP1 (HPMXSEL=4)	-	CMP1 (LPMXSEL=4)	-	AIO232
B5/D15/E15	38	32	-	-	-	-	B5	-	D15	E15		-	CMP1 (HPMXSEL=5)	-	CMP1 (LPMXSEL=5)	-	AIO252
PGA3_OUT			24	20	18		-		-	-		PGA3_OUT					
Analog Group 2													**CMP2**				
A4/B8	42	36	27	23	21	A4	B8	-	-	-			CMP2 (HPMXSEL=0)	-	CMP2 (LPMXSEL=0)	-	AIO225
A12	35	28	22	18	16	A12	-	-	-	-			CMP2 (HPMXSEL=1)	-	CMP2 (LPMXSEL=1)	-	AIO238
A9	48	38	28	24	22	A9	-	-	-	-			CMP2 (HPMXSEL=2)	-	CMP2 (LPMXSEL=2)	-	AGPIO227 (3)
A10/B1/C10	50	40	29	25	23	A10	B1	C10	-	-			CMP2 (HPMXSEL=3)	CMP2 (HNMXSEL=0)	CMP2 (LPMXSEL=3)	CMP2 (LNMXSEL=0)	AGPIO230 (3)
B0/C11	-	41	-	-	-	-	B0	C11					CMP2 (HPMXSEL=4)	-	CMP2 (LPMXSEL=4)	-	AGPIO231 (3)
A5	28	-	17	13	11	A5	-	-	-	-			CMP2 (HPMXSEL=5)	-	CMP2 (LPMXSEL=5)	-	AIO249
	-	35	-	-	-												
Analog Group 3													**CMP3**				
B2/C6/E12	19	15	11	7	-	-	B2	C6	-	E12			CMP3 (HPMXSEL=0)	-	CMP3 (LPMXSEL=0)	-	AGPIO226 (3)
B12/C2/PGA2_INM	28	21	17	13	11	-	B12	C2	-	-		PGA2_INM	CMP3 (HPMXSEL=1)	CMP3 (HNMXSEL=1)	CMP3 (LPMXSEL=1)	CMP3 (LNMXSEL=1)	AIO244

Copyright © 2026 Texas Instruments Incorporated

Table 6-13. Analog Pins and Internal Connections (continued)

Pin Name	Pins/Package					ADC					DAC	PGA	Comparator Subsystem (MUX)				AIO Input/ AGPIO
	128 QFP	100 QFP	80 QFP	64 QFP	56 QFN	A	B	C	D	E			High Positive	High Negative	Low Positive	Low Negative	
A0/B15/C15/DACA_OUT	30	23	19	15	13	A0	B15	C15	-	-	DACA_OUT		CMP3 (HPMXSEL=2)	-	CMP3 (LPMXSEL=2)	-	AIO231
B3/PGA2_INP	20	16	12	8	6	-	B3	-	-	-		PGA2_INP	CMP3 (HPMXSEL=3)	CMP3 (HNMXSEL=0)	CMP3 (LPMXSEL=3)	CMP3 (LNMXSEL=0)	AGPIO242 (3)
C5		28					-	C5									
A14/B14/C4/PGA1_OUT	26	19	15	11	9	A14	B14	C4	-	-		PGA1_OUT	CMP3 (HPMXSEL=4)	-	CMP3 (LPMXSEL=4)	-	AIO239
A3	20	-	12	8	6	A3	-	-	-	-			CMP3 (HPMXSEL=5)	-	CMP3 (LPMXSEL=5)	-	
	-	18	-	-	-												AIO229
Analog Group 4													**CMP4**				
B4/C8	49	39	28	24	22	-	B4	C8	-	-			CMP4 (HPMXSEL=0)	-	CMP4 (LPMXSEL=0)	-	AGPIO236 (3)
C1/E11/PGA3_INP	35	29	22	18	16	-	-	C1	-	E11		PGA3_INP	CMP4 (HPMXSEL=2)	-	CMP4 (LPMXSEL=2)	-	-
C14	42	42	27	23	21	-	-	C14	-	-			CMP4 (HPMXSEL=3)	CMP4 (HNMXSEL=0)	CMP4 (LPMXSEL=3)	CMP4 (LNMXSEL=0)	AGPIO247 (3)
B0/C11	39	-	24	20	18	A8	B0	C11	-	-			CMP4 (HPMXSEL=4)	-	CMP4 (LPMXSEL=4)	-	AIO241
A8	-	37	-	-	-		-	-									AIO240
B11/D16/E16	36	30	-	-	-	-	B11	-	D16	E16			CMP4 (HPMXSEL=5)	-	CMP4 (LPMXSEL=5)	-	AIO251
PGA3_INM	36(1)	30(1)	23	19	17	-	-	-	-	-		PGA3_INM					
A7/B30/C3/D12/E30	37	31				A7	B30	C3	D12	E30			CMP4 (HPMXSEL=1)	CMP4 (HNMXSEL=1)	CMP4 (LPMXSEL=1)	CMP4 (LNMXSEL=1)	AIO245
Other Analog																	
TempSensor(2)						-	-	C12	-	-			CMP2 (HPMXSEL=7)	-	-	-	-
PGA1_OUT_INT(2)						A21	B21	-	-	-		PGA1_OUT_INT	CMP1 (HPMXSEL=6)	-	CMP1 (LPMXSEL=6)	-	-
PGA2_OUT_INT(2)						-	B22	C21	-	-		PGA2_OUT_INT	CMP3 (HPMXSEL=6)	-	CMP3 (LPMXSEL=6)	-	-
PGA3_OUT_INT(2)						A22	-	C22	-	-		PGA3_OUT_INT	CMP2 (HPMXSEL=6)	-	CMP2 (LPMXSEL=6)	-	-
INTERNALTEST						A31	B31	C31	D31	E31							

(1) Signal is bonded together with another signal as a single pin on this package.
(2) Internal connection only; does not come to a device pin.
(3) Only on 100 QFP package, AGPIO 247 is available.

Copyright © 2026 Texas Instruments Incorporated

Note

The GPIOs on the analog pins support full digital input and output functionality and are referred to as AGPIOs. By default, the AGPIOs are unconnected; that is, the analog and digital functions are both disabled. For configuration details, see the *Digital Inputs and Outputs on ADC Pins (AGPIOs)* section.

Copyright © 2026 Texas Instruments Incorporated

6.15.3 Analog Signal Descriptions

Table 6-14. Analog Signal Descriptions

Signal Name	Description
AIOx	Digital input on ADC pin
AGPIOx	Digital input/output pin with ADC functionality
ADCINAx, Ax	ADC A Input
ADCINBx, Bx	ADC B Input
ADCINCx, Cx	ADC C Input
ADCINDx, Dx	ADC D Input
ADCINEx, Ex	ADC E Input
CMPx_HP	Comparator subsystem high comparator positive input
CMPx_HN	Comparator subsystem high comparator negative input
CMPx_LP	Comparator subsystem low comparator positive input
CMPx_LN	Comparator subsystem low comparator negative input
DACA_OUT	Buffered DAC Output
CMP1_DACL	CMPSS1 DAC Output
PGAx_INP	PGA module non-inverting pin
PGAx_INM	PGA module inverting pin
PGAx_OUT	PGA module output
PGAx_OUT_INT	PGA module internal output connected to CMPSS and ADC modules
TEMP SENSOR, TS	Internal temperature sensor

Copyright © 2026 Texas Instruments Incorporated

6.15.4 Analog-to-Digital Converter (ADC)

The ADC module described here is a successive approximation (SAR) style ADC with resolution of 12 bits. This section refers to the analog circuits of the converter as the “core,” and includes the channel-select MUX, the sample-and-hold (S/H) circuit, the successive approximation circuits, voltage reference circuits, and other analog support circuits. The digital circuits of the converter are referred to as the “wrapper” and include logic for programmable conversions, result registers, interfaces to analog circuits, interfaces to the peripheral buses, post-processing circuits, and interfaces to other on-chip modules.

Each ADC module consists of a single sample-and-hold (S/H) circuit. The ADC module is designed to be duplicated multiple times on the same chip, allowing simultaneous sampling or independent operation of multiple ADCs. The ADC wrapper is start-of-conversion (SOC)-based (see the *SOC Principle of Operation* section of the Analog-to-Digital Converter (ADC) chapter in the *TMS320F28P55x Real-Time Microcontrollers Technical Reference Manual*).

Each ADC has the following features:

- Resolution of 12 bits
- Ratiometric external reference set by VREFHI/VREFLO
- Selectable internal reference of 2.5 V or 3.3 V
- Single-ended signal mode
- Input multiplexer with up to 32 channels
- 16 configurable SOCs
- 16 individually addressable result registers
- External analog input mux selection per SOC, up to 4 bits
- Sample cap reset feature for memory crosstalk mitigation
- Multiple trigger sources
  - Software immediate start
  - All ePWMs : ADCSOC A or B
  - GPIO XINT2
  - CPU Timers 0/1/2
  - ADCINT1/2
  - ECAP events in capture mode (CEVT1, CEVT2, CEVT3, and CEVT4) and APWM mode (period match, compare match, or both).
  - Global software trigger for multiple ADCs
- Four flexible interrupts
- Burst-mode triggering option
- Hardware oversampling mode up to 8x, with configurable trigger spread delay
- Hardware undersampling mode
- Trigger phase delay function
- Four post-processing blocks, each with:
  - Saturating offset calibration
  - Error from setpoint calculation
  - High, low, and zero-crossing compare, with interrupt and ePWMs trip capability
  - Configurable digital filter for high/low/zero-crossing compare
  - Trigger-to-sample delay capture
  - Absolute value calculation
  - 24-bit accumulation register for oversampling, with configurable binary shift
  - Minimum/maximum calculation for outlier rejection

Note

Not every channel can be pinned out from all ADCs. See the *Pin Configuration and Functions* section to determine which channels are available.

Copyright © 2026 Texas Instruments Incorporated

The block diagram for the ADC core and ADC wrapper are shown in Figure 6-35.

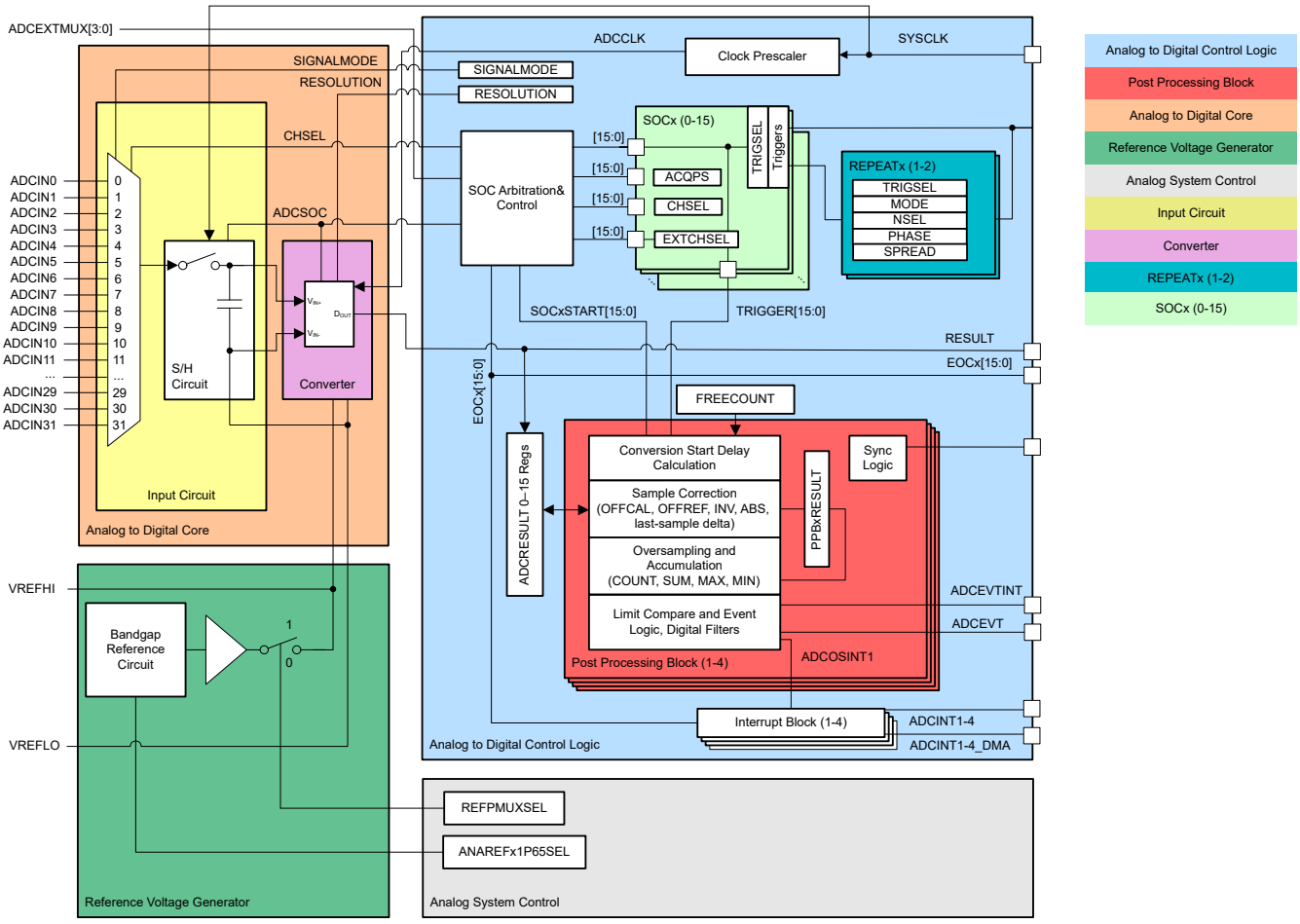

Figure 6-35. ADC Module Block Diagram

Copyright © 2026 Texas Instruments Incorporated

6.15.4.1 ADC Configurability

Some ADC configurations are individually controlled by the SOCs, while others are globally controlled per ADC module. Table 6-15 summarizes the basic ADC options and their level of configurability.

Table 6-15. ADC Options and Configuration Levels

OPTIONS	CONFIGURABILITY
Clock	Per module(1)
Resolution	Not configurable (12-bit resolution only)
Signal mode	Not configurable (single-ended signal mode only)
Reference voltage source	Either external or internal for all modules
Trigger source	Per SOC(1)
Converted channel	Per SOC
Acquisition window duration	Per SOC(1)
EOC location	Per module
Burst mode	Per module(1)

(1) Writing these values differently to different ADC modules could cause the ADCs to operate asynchronously. For guidance on when the ADCs are operating synchronously or asynchronously, see the *Ensuring Synchronous Operation* section of the Analog-to-Digital Converter (ADC) chapter in the *TMS320F28P55x Real-Time Microcontrollers Technical Reference Manual* .

6.15.4.1.1 Signal Mode

The ADC supports single-ended signaling. The input voltage to the converter is sampled through a single pin (ADCINx), referenced to VREFLO.

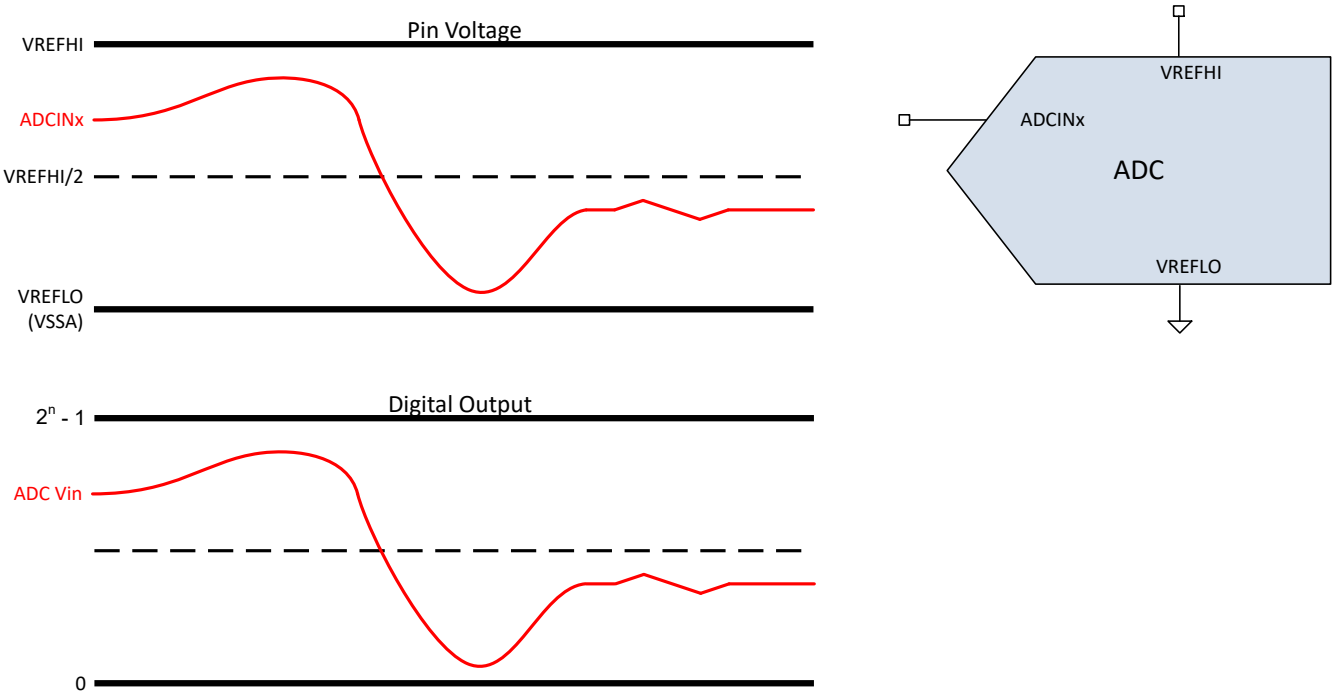

Figure 6-36. Single-ended Signaling Mode

6.15.4.2 ADC Electrical Data and Timing

Note

The ADC inputs should be kept below VDDA + 0.3 V. If an ADC input goes above this level, ADC disturbances to other channels may occur by two mechanisms:

- ADC input overvoltage will overdrive the CMPSS mux, disturbing all other channels which share a common CMPSS mux. This disturbance will be continuous regardless of if the overvoltage input is sampled by the ADC
- When the ADC samples the overvoltage ADC input, VREFHI will be pulled up to a higher level. This will disturb subsequent ADC conversions on any channel until the V_{REF} stabilizes

Note

The VREFHI pin must be kept below VDDA + 0.3 V to ensure proper functional operation. If the VREFHI pin exceeds this level, a blocking circuit may activate, and the internal value of VREFHI may float to 0 V internally, giving improper ADC conversion.

6.15.4.2.1 ADC Operating Conditions

over recommended operating conditions (unless otherwise noted)

PARAMETER	TEST CONDITIONS	MIN	TYP	MAX	UNIT
ADCCLK (derived from PERx.SYSCLK)		5		75	MHz
Sample rate	150-MHz SYSCLK			3.9	MSPS
Sample window duration (set by ACQPS and PERx.SYSCLK)(1)	With 50 Ω or less R_s	67			ns
VREFHI	External Reference: ANAREFx1P65SEL = 0 FSR = VREFHI pin voltage	2.4	2.5 or 3.0	VDDA	V
	External Reference: ANAREFx1P65SEL = 1 FSR = VREFHI pin voltage x2	1.55	1.65	VDDA/2	V
VREFHI(2)	Internal Reference = 3.3V Range		1.65		V
	Internal Reference = 2.5V Range		2.50		V
VREFLO		VSSA		VSSA	V
VREFHI - VREFLO		2.4		VDDA	V
Conversion range	Internal Reference = 3.3 V Range	0		3.3	V
Conversion range	Internal Reference = 2.5 V Range	0		2.5	V
Conversion range	External Reference	VREFLO		VREFHI	V
Conversion range	Analog Supply as Reference	VSSA		VDDA	V

(1) The sample window must also be at least as long as 1 ADCCLK cycle for correct ADC operation.
(2) In internal reference mode, the reference voltage is driven out of the VREFHI pin by the device. The user should not drive a voltage into the pin in this mode.

Copyright © 2026 Texas Instruments Incorporated

6.15.4.2.2 ADC Characteristics

over recommended operating conditions (unless otherwise noted)

PARAMETER	TEST CONDITIONS	MIN	TYP	MAX	UNIT
General					
ADCCLK Conversion Cycles	150-MHz SYSCLK			14	ADCCLKs
Power Up Time	External Reference mode			500	µs
	Internal Reference mode			5000	µs
	Internal Reference mode, when switching between 2.5-V range and 3.3-V range.			5000	µs
VREFHI input current(1)			40		µA
Internal Reference Capacitor Value(2)		2.2			µF
External Reference Capacitor Value(2)		2.2			µF
DC Characteristics					
Gain Error	Internal reference	–45		45	LSB
Gain Error	External reference	–5	±3	5	LSB
Offset Error		–5	±2	5	LSB
Channel-to-Channel Gain Error(4)			2		LSB
Channel-to-Channel Offset Error(4)			2		LSB
ADC-to-ADC Gain Error(5)	Identical VREFHI and VREFLO for all ADCs		4		LSB
ADC-to-ADC Offset Error(5)	Identical VREFHI and VREFLO for all ADCs		2		LSB
DNL Error		>–1	±0.5	1	LSB
INL Error		–2	±1.5	2	LSB
ADC-to-ADC Isolation	VREFHI = 2.5 V, synchronous ADCs	–1		1	LSBs
AC Characteristics					
SNR(3)	VREFHI = 2.5 V, fin = 100 kHz, SYSCLK from X1		69.2		dB
	VREFHI = 2.5 V, fin = 100 kHz, SYSCLK from INTOSC(6)		60.1		
THD(3)	VREFHI = 2.5 V, fin = 100 kHz		-83		dB
SFDR(3)	VREFHI = 2.5 V, fin = 100 kHz		79.2		dB
SINAD(3)	VREFHI = 2.5 V, fin = 100 kHz, SYSCLK from X1		68.5		dB
	VREFHI = 2.5 V, fin = 100 kHz, SYSCLK from INTOSC(6)		60.0		
ENOB(3)	VREFHI = 2.5 V, fin = 100 kHz, SYSCLK from X1, Single ADC		11.2		bits
	VREFHI = 2.5 V, fin = 100 kHz, SYSCLK from X1, synchronous ADCs		11		
	VREFHI = 2.5 V, fin = 100 kHz, SYSCLK from X1, asynchronous ADCs		Not Supported		
PSRR	VDD = 1.2-V DC + 100mV DC up to Sine at 1 kHz		105		dB
	VDD = 1.2-V DC + 100 mV DC up to Sine at 300 kHz		102		
	VDDA = 3.3-V DC + 200 mV DC up to Sine at 1 kHz		97		
	VDDA = 3.3-V DC + 200 mV Sine at 900 kHz		85		

(1) Load current on VREFHI increases when ADC input is greater than VDDA. This causes inaccurate conversions.
(2) A ceramic capacitor with package size of 0805 or smaller is preferred. Up to ±20% tolerance is acceptable.

Copyright © 2026 Texas Instruments Incorporated

(3) IO activity is minimized on pins adjacent to ADC input and VREFHI pins as part of best practices to reduce capacitive coupling and crosstalk.
(4) Variation across all channels belonging to the same ADC module.
(5) Worst case variation compared to other ADC modules.
(6) Frequency tolerance over temperature of the INTOSC results in lower SNR vs external clock, due to FFT uncertainty

6.15.4.2.3 ADC INL and DNL

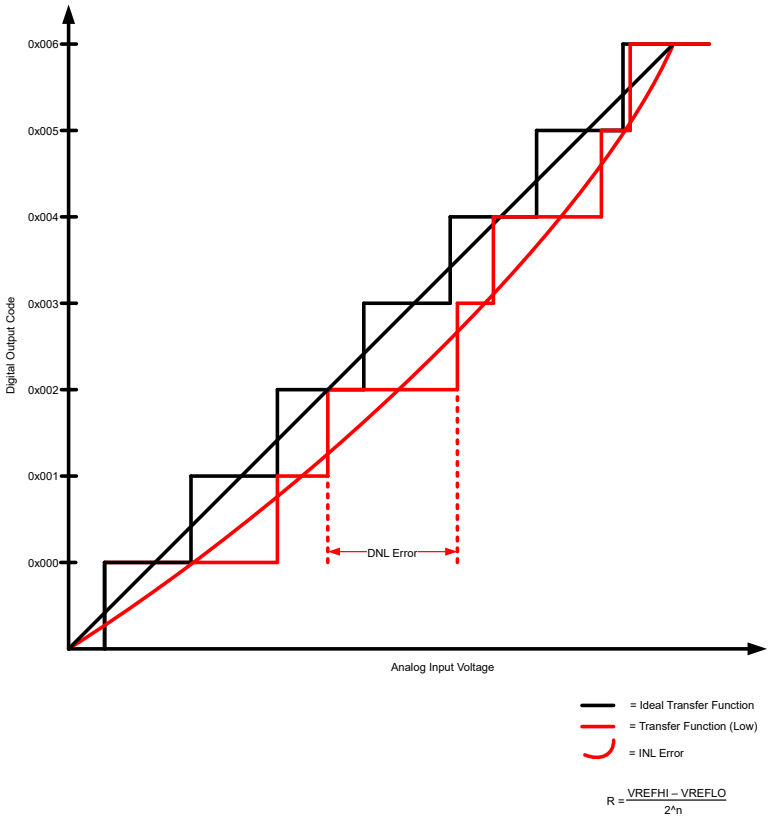

Figure 6-37. ADC INL and DNL

Copyright © 2026 Texas Instruments Incorporated

6.15.4.2.4 ADC Performance Per Pin

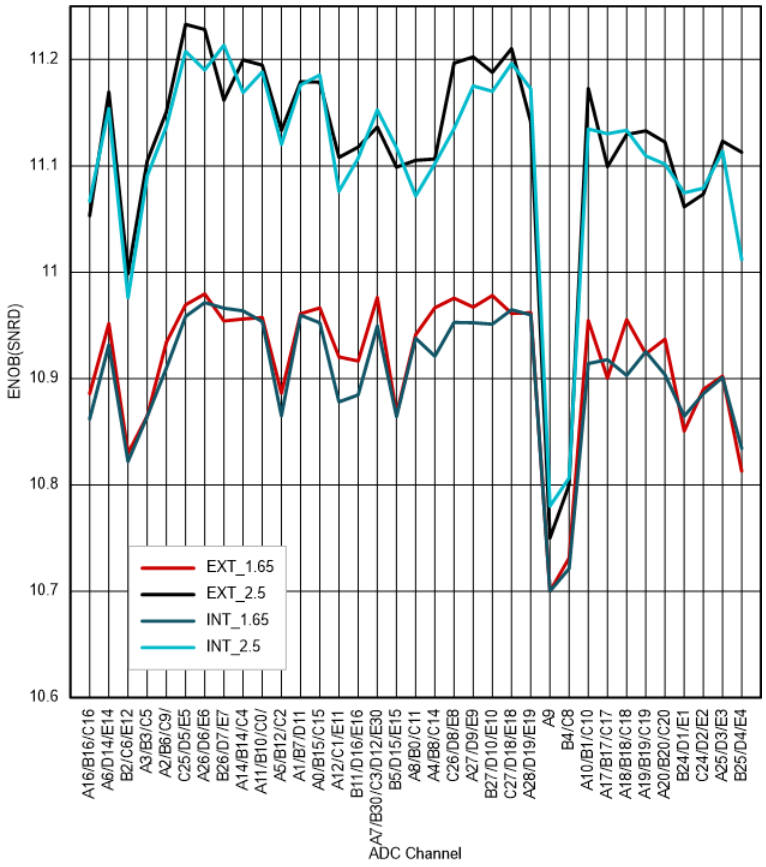

Figure 6-38. Per-Channel ENOB for 128-Pin PDT

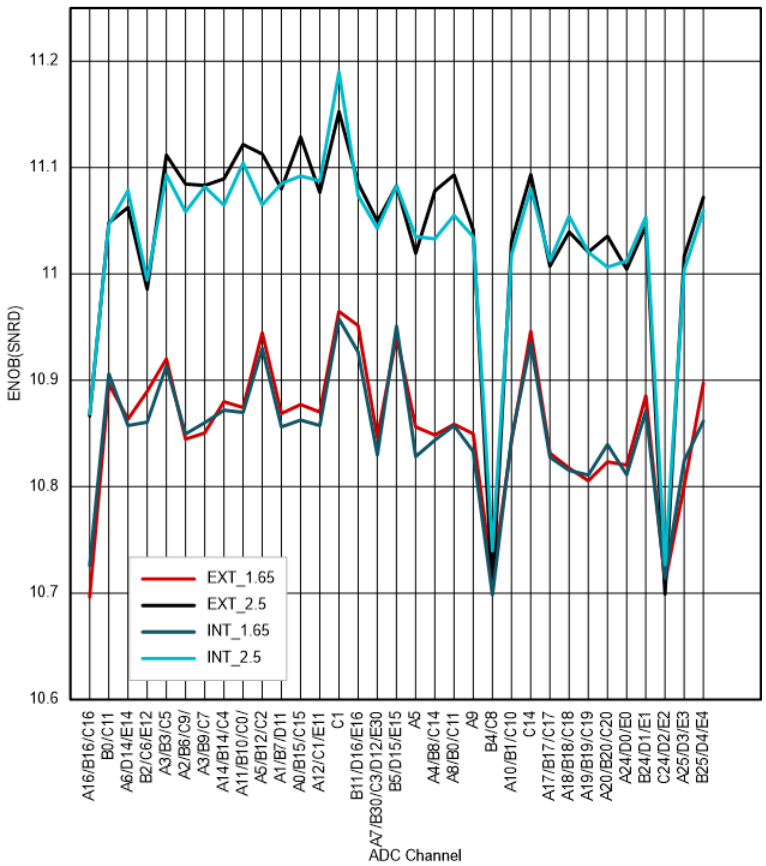

Figure 6-39. Per-Channel ENOB for 100-pin PZ

Copyright © 2026 Texas Instruments Incorporated

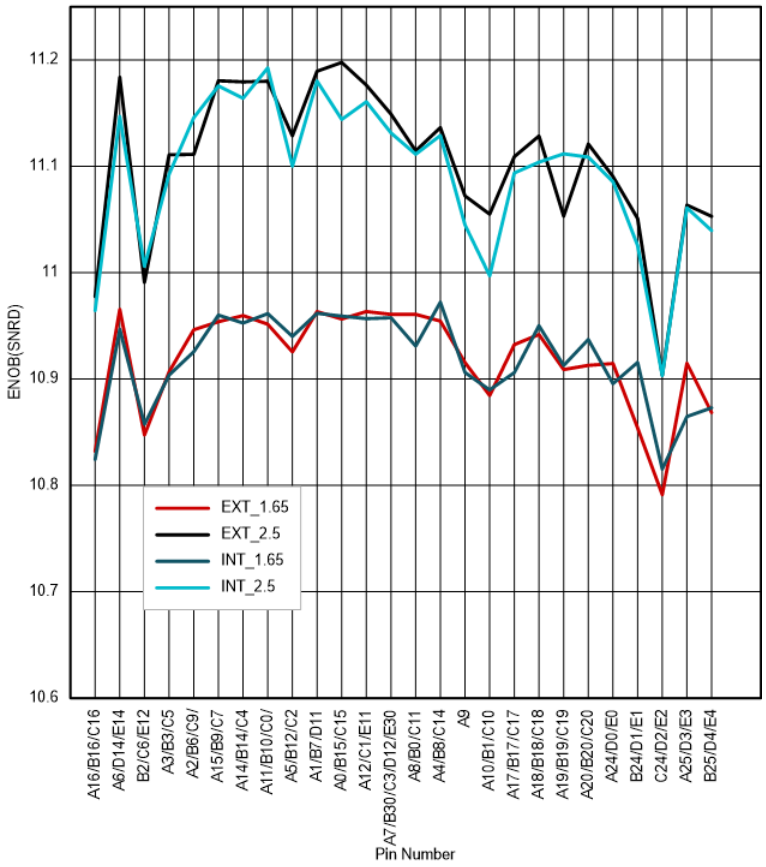

Figure 6-40. Per-Channel ENOB for 80-Pin PNA

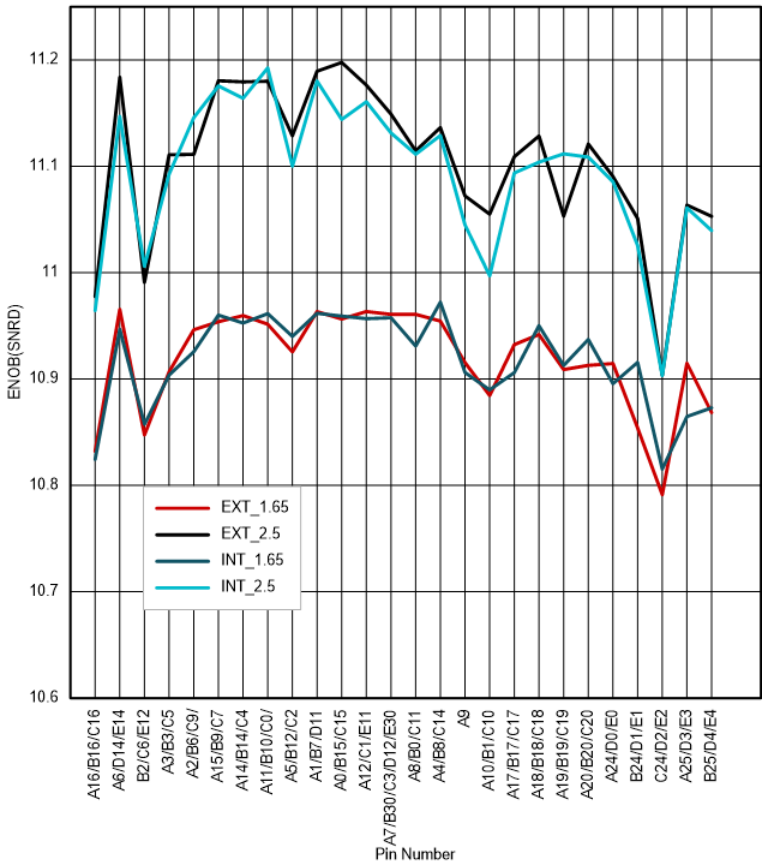

Figure 6-41. Per-Channel ENOB for 64-Pin PM

Copyright © 2026 Texas Instruments Incorporated

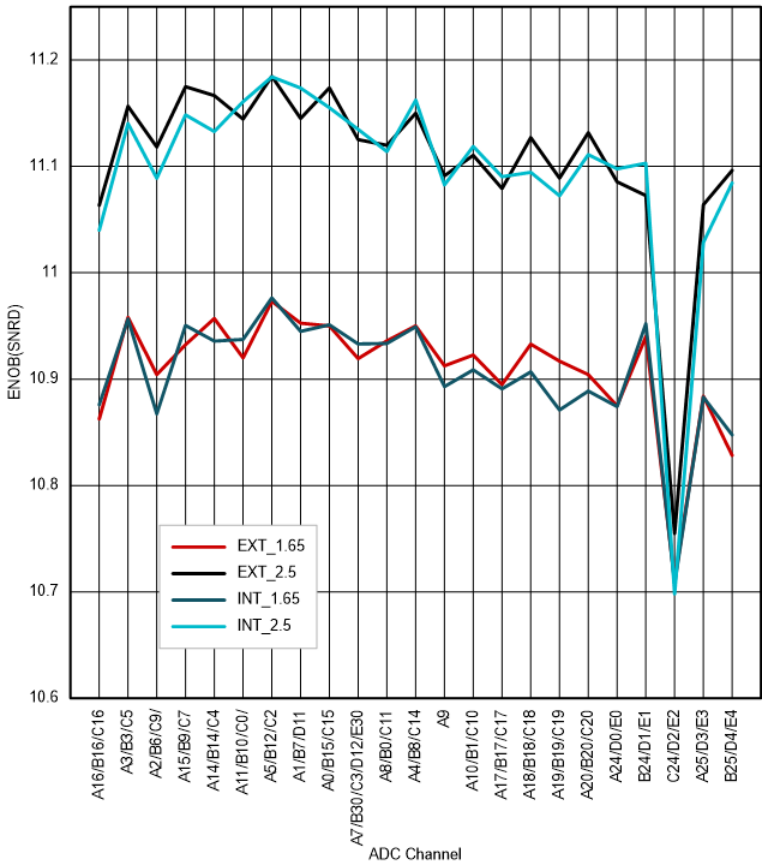

Figure 6-42. Per-Channel ENOB for 56-Pin RSH

6.15.4.2.5 ADC Input Model

Table 6-16. Input Model Parameters

	DESCRIPTION	REFERENCE MODE	VALUE
C_p	Parasitic input capacitance	All	See Table 6-17 to Table 6-21
R_{on}	Sampling switch resistance	External Reference, 2.5-V Internal Reference	1000 Ω
		3.3-V Internal Reference	1700 Ω
C_h	Sampling capacitor	External Reference, 2.5-V Internal Reference	4 pF
		3.3-V Internal Reference	2.5 pF
R_s	Nominal source impedance	All	50 Ω

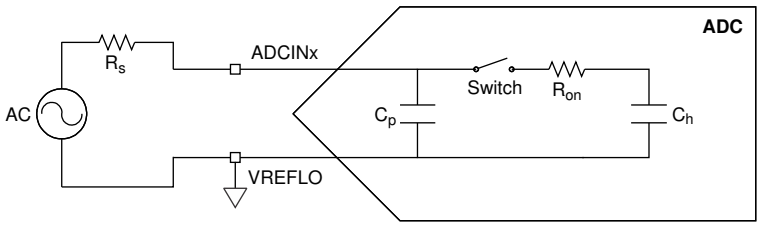

Figure 6-43. Input Model

This input model should be used with actual signal source impedance to determine the acquisition window duration. For more information, see the *Choosing an Acquisition Window Duration* section of the Analog-to-Digital Converter (ADC) chapter in the *TMS320F28P55x Real-Time Microcontrollers Technical Reference Manual*. For recommendations on improving ADC input circuits, see the *ADC Input Circuit Evaluation for C2000 MCUs* Application Note.

Table 6-17. Per-Channel Parasitic Capacitance for 128-Pin QFP

ADC CHANNEL	C_p (pF)	
	COMPARATOR DISABLED	COMPARATOR ENABLED
A0, B15, C15, DACA_OUT	6.1	9.6
A1, B7, D11, CMP1_DACL	4.1	7.6
A2, B6, C9, PGA1_INP	6.1	9.4
A4, B8	6.0	7.9
A6, D14, E14	4.2	7.6
A7, C3, D12, B30, E30	7.5	10.3
A8, B0, C11	3.4	7.8
A9	3.7	8.7
A10, B1, C10	3.2	10.5
A11, B10, C0,PGA2_OUT	9.4	13.0
A12	6.5	11.5
A14, B14, C4, PGA1_OUT	5.8	8.0
A15	3.3	11.2
A16, B16, C16	5.0	5.6
A17,B17,C17	6.6	6.8
A18,B18,C18	5.2	5.9
A19,B19,C19	4.6	6.0
A20,B20,C20	6.7	6.2
B2, C6, E12	4.6	6.8
A3, B3, C5, PGA2_INP	14.0	20.3
B4, C8	4.3	7.9
B5, D15, E15	6.2	8.8
A15, B9, C7, PGA1_INM	3.8	11.2
B11, D16, E16	4.0	7.4
A5, B12, C2, PGA2_INM	8.6	12.8
A12, C1, E11, PGA3_INP	10.2	10.2
C5	5.4	5.4
C14	4.9	6.4
D0,E0,A24	5.6	6.3
D1,E1,B24	5.5	6.4
D2,E2,C24	4.2	4.3
D3,E3,A25	6.0	6.6
D4,E4,B25	7.2	7.8

Copyright © 2026 Texas Instruments Incorporated

Table 6-17. Per-Channel Parasitic Capacitance for 128-Pin QFP (continued)

ADC CHANNEL	C_p (pF)	
	COMPARATOR DISABLED	COMPARATOR ENABLED
D5,E5,C25	2.3	2.3
D6,E6,A26	5.0	5.0
D7,E7,B26	5.0	5.0
D8, E8, C26	3.3	3.3
D9,E9, A27	3.6	3.6
D10,E10,B27	3.0	3.8
D18,E18,C27	3.0	3.5
D19,E19,A28	2.1	3.6

Table 6-18. Per-Channel Parasitic Capacitance for 100-Pin QFP

ADC CHANNEL	C_p (pF)	
	COMPARATOR DISABLED	COMPARATOR ENABLED
A0, B15, C15, DACA_OUT	6.1	9.6
A1, B7, D11, CMP1_DACL	4.1	7.4
A2, B6, C9, PGA1_INP	6.1	9.4
A4, B8	6.0	7.9
A5	4.2	7.6
A6, D14, E14	7.5	10.3
A7, C3, D12, B30, E30	3.4	7.8
A8, B0, C11	3.7	8.7
A9	3.7	8.7
A10, B1, C10	3.2	10.5
A11, B10, C0, PGA2_OUT	9.4	13.0
A12	6.5	11.5
A14, B14, C4, PGA1_OUT	5.8	8.0
A16/B16/C16	5.0	5.6
A17,B17,C17	6.6	6.8
A18,B18,C18	5.2	5.9
A19,B19,C19	4.6	6.0
A20,B20,C20	6.7	6.2
B2, C6, E12	4.6	6.8
B3, PGA2_INP	14.0	20.3
B4, C8	4.3	7.9
B5, D15, E15	6.2	8.8
A3, B9, C7, PGA1_INM	7.0	7.6
B11, D16, E16	4.0	7.4
B12, C2, PGA2_INM	8.6	12.8
C1,E11,PGA3_INP	10.2	10.2
C5	5.4	5.4

Copyright © 2026 Texas Instruments Incorporated

Table 6-18. Per-Channel Parasitic Capacitance for 100-Pin QFP (continued)

ADC CHANNEL	C_p (pF)	
	COMPARATOR DISABLED	COMPARATOR ENABLED
C14	4.9	6.4
D0,E0,A24	5.6	6.3
D1,E1,B24	5.5	6.4
D2,E2,C24	4.2	4.3
D3,E3,A25	6.0	6.6
D4,E4,B25	7.2	7.8

Table 6-19. Per-Channel Parasitic Capacitance for 80-Pin QFP

ADC CHANNEL	C_p (pF)	
	COMPARATOR DISABLED	COMPARATOR ENABLED
A0, B15, C15, DACA_OUT	6.1	9.6
A1, B7, D11, CMP1_DACL	4.1	7.6
A2, B6, C9, PGA1_INP	6.1	9.4
A4, B8	6.0	7.9
A6, D14, E14	4.2	7.6
A7, C3, D12, B30,E30	7.5	10.3
A8, B0, C11	3.4	7.8
A9	3.7	8.7
A10, B1, C10	3.2	10.5
A11, B10, C0,PGA2_OUT	9.4	13.0
A14, B14, C4, PGA1_OUT	5.8	8.0
A16/B16/C16	5.0	5.6
A17,B17,C17	6.6	6.8
A18,B18,C18	5.2	5.9
A19,B19,C19	4.6	6.0
A20,B20,C20	6.7	6.1
B2, C6, E12	4.6	6.8
A3, B3, C9, PGA2_INP	14.0	20.3
B4, C8	4.3	7.9
A15, B9, C7, PGA1_INM	3.8	11.2
A5, B12, C2, PGA2_INM	8.6	12.8
A12, C1,E11,PGA3_INP	10.2	10.2
C5	5.4	5.4
C14	4.9	6.4
D0,E0,A24	5.6	6.3
D1,E1,B24	5.5	6.4
D2,E2,C24	4.2	4.3
D3,E3,A25	6.0	6.6

Copyright © 2026 Texas Instruments Incorporated

Table 6-19. Per-Channel Parasitic Capacitance for 80-Pin QFP (continued)

ADC CHANNEL	C_p (pF)	
	COMPARATOR DISABLED	COMPARATOR ENABLED
D4,E4,B25	7.2	7.8

Table 6-20. Per-Channel Parasitic Capacitance for 64-Pin QFP

ADC CHANNEL	C_p (pF)	
	COMPARATOR DISABLED	COMPARATOR ENABLED
A0, B15, C15, DACA_OUT	6.1	9.6
A1, B7, D11, CMP1_DACL	4.1	7.6
A2, B6, C9, PGA1_INP	6.1	9.4
A4, B8	6.0	7.9
A6, D14, E14	4.2	7.6
A7, C3, D12, B30, E30	7.5	10.3
A8, B0, C11	3.4	7.8
A9	3.7	8.7
A10, B1, C10	3.2	10.5
A11, B10, C0,PGA2_OUT	9.4	13.0
A14, B14, C4, PGA1_OUT	5.8	8.0
A16, B16, C16	5.0	5.6
A17,B17,C17	6.6	6.8
A18,B18,C18	5.2	5.9
A19,B19,C19	4.6	6.0
A20,B20,C20	6.7	6.1
B2, C6, E12	4.6	6.8
A3, B3, PGA2_INP	14.0	20.3
B4, C8	4.3	7.9
A15, B9, C7, PGA1_INM	3.8	11.2
A5, B12, C2, PGA2_INM	8.6	12.8
A12, C1, E11, PGA3_INP	10.2	10.2
C5	5.4	5.4
C14	4.9	6.4
D0,E0,A24	5.6	6.3
D1,E1,B24	5.5	6.4
D2,E2,C24	4.2	4.3
D3,E3,A25	6.0	6.6
D4,E4,B25	7.2	7.8

Copyright © 2026 Texas Instruments Incorporated

Table 6-21. Per-Channel Parasitic Capacitance for 56-Pin QFN

ADC CHANNEL	C_p (pF)	
	COMPARATOR DISABLED	COMPARATOR ENABLED
A0, B15, C15, DACA_OUT	6.1	9.6
A1, B7, D11, CMP1_DACL	4.1	7.6
A2, B6, C9, PGA1_INP	6.1	9.4
A4, B8	6.0	7.9
A7, C3, D12, B30,E30	7.5	10.3
A8, B0, C11	3.4	7.8
A9	3.7	8.7
A10, B1, C10	3.2	10.5
A11, B10, C0,PGA2_OUT	9.4	13.0
A14, B14, C4, PGA1_OUT	5.8	8.0
A16,B16,C16	5.0	5.6
A17,B17,C17	6.6	6.8
A18,B18,C18	5.2	5.9
A19,B19,C19	4.6	6.0
A20,B20,C20	6.7	6.1
A3, B3, PGA2_INP	14.0	20.3
B4, C8	4.3	7.9
A15, B9, C7, PGA1_INM	3.8	11.2
A5, B12, C2, PGA2_INM	8.6	12.8
A12, C1, E11, PGA3_INP	10.2	10.2
C5	5.4	5.4
C14	4.9	6.4
D0,E0,A24	5.6	6.3
D1,E1,B24	5.5	6.4
D2,E2,C24	4.2	4.3
D3,E3,A25	6.0	6.6
D4,E4,B25	7.2	7.8

Copyright © 2026 Texas Instruments Incorporated

6.15.4.2.6 ADC Timing Diagrams

The following diagrams show the ADC conversion timings for two SOCs given the following assumptions:

- SOC0 and SOC1 are configured to use the same trigger.
- No other SOCs are converting or pending when the trigger occurs.
- The round-robin pointer is in a state that causes SOC0 to convert first.
- ADCINTSEL is configured to set an ADCINT flag upon end of conversion for SOC0 (whether this flag propagates through to the CPU to cause an interrupt is determined by the configurations in the interrupt controller).

Table 6-22 lists the descriptions of the ADC timing parameters. Table 6-23 and Table 6-24 list the ADC timings.

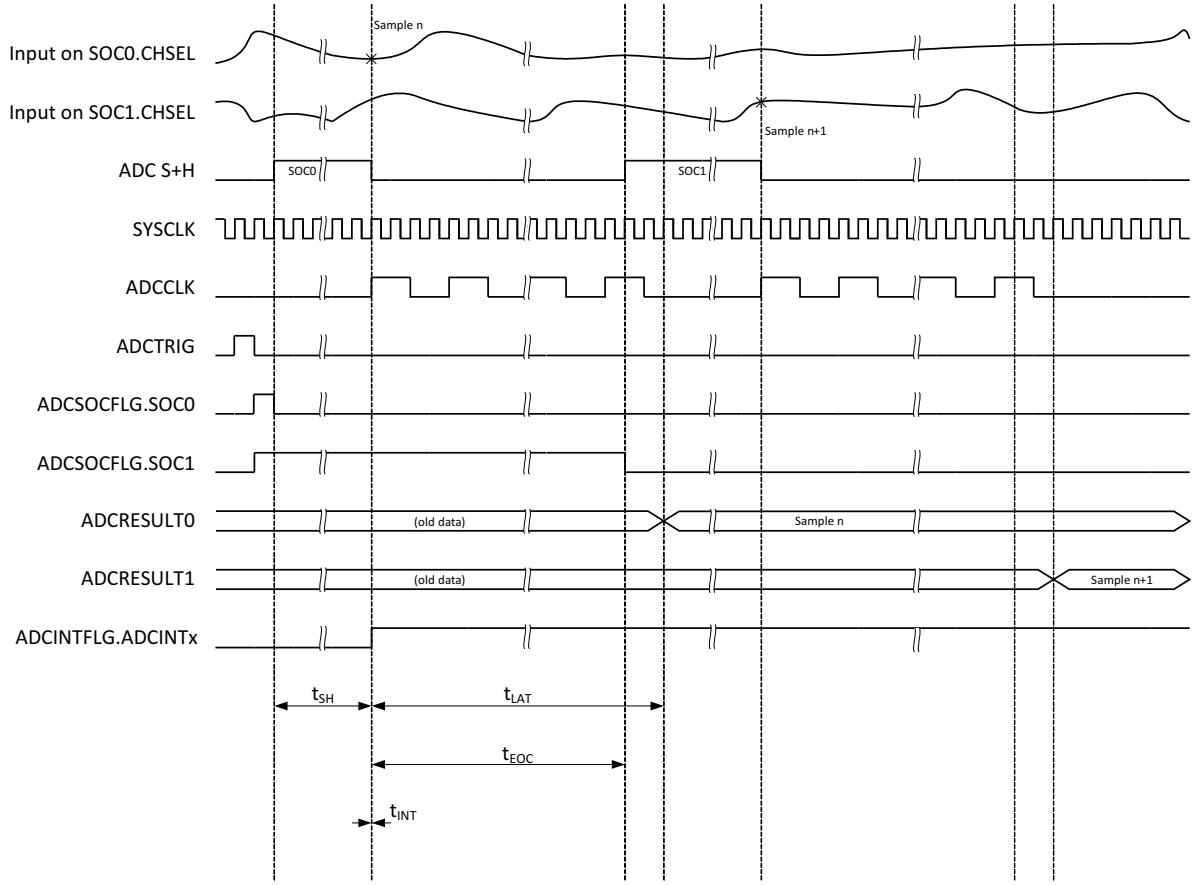

Figure 6-44. ADC Timings for 12-bit Mode in Early Interrupt Mode

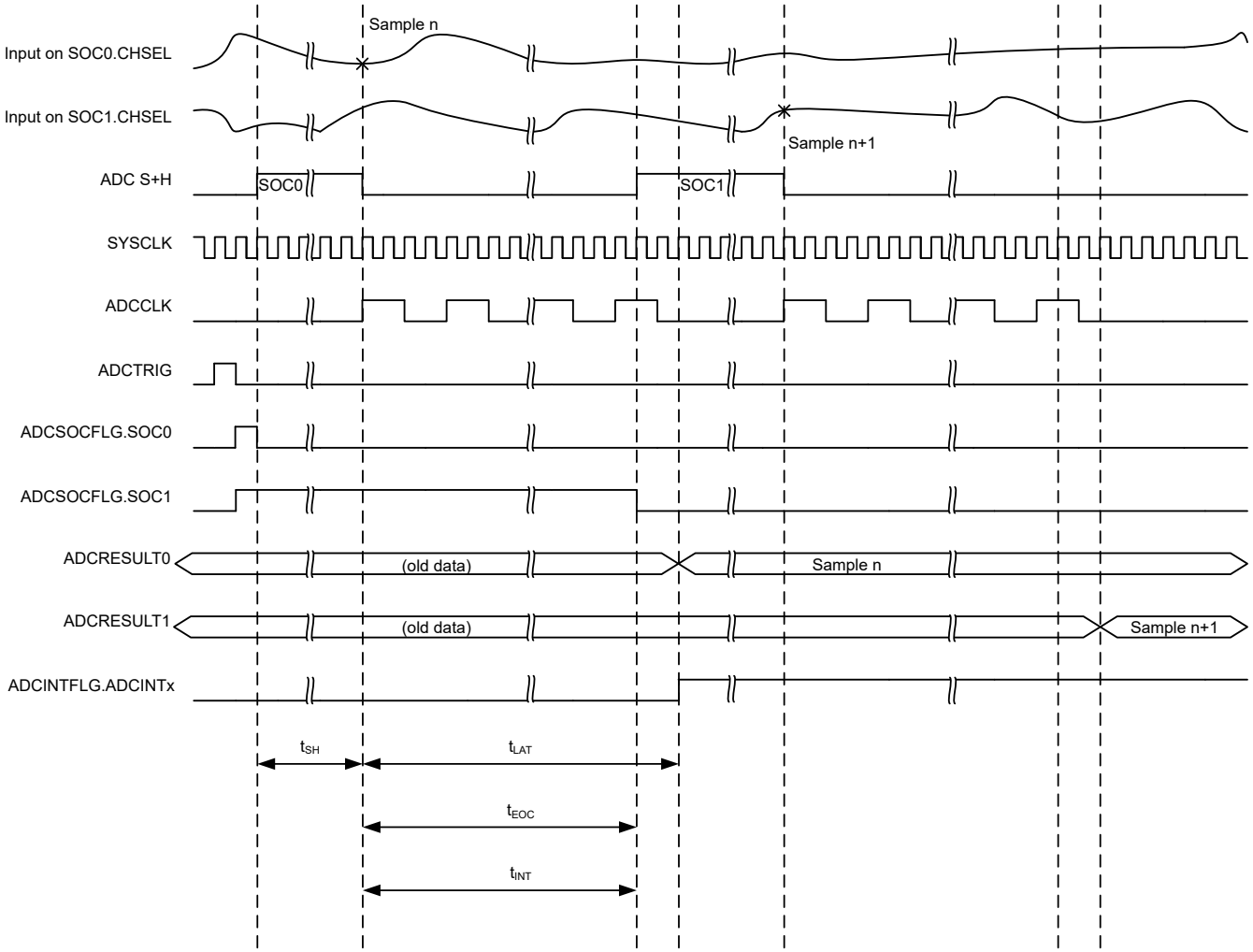

Figure 6-45. ADC Timings for 12-bit Mode in Late Interrupt Mode

Copyright © 2026 Texas Instruments Incorporated

Table 6-22. ADC Timing Parameter Descriptions

PARAMETER	DESCRIPTION
t_{SH}	The duration of the S+H window. At the end of this window, the value on the S+H capacitor becomes the voltage to be converted into a digital value. The duration is given by (ACQPS + 1) SYSCLK cycles. ACQPS can be configured individually for each SOC, so t_{SH} is not necessarily the same for different SOCs. **Note:** The value on the S+H capacitor is captured approximately 5 ns before the end of the S+H window regardless of device clock settings.
t_{LAT}	The time from the end of the S+H window until the ADC results latch in the ADCRESULTx register. If the ADCRESULTx register is read before this time, the previous conversion results are returned.
t_{EOC}	The time from the end of the S+H window until the S+H window for the next ADC conversion can begin. The subsequent sample can start before the conversion results are latched.
t_{INT}	The time from the end of the S+H window until an ADCINT flag is set (if configured). If the INTPULSEPOS bit in the ADCCTL1 register is set, t_{INT} coincides with the end of conversion (EOC) signal. If the INTPULSEPOS bit is 0, t_{INT} coincides with the end of the S+H window. If t_{INT} triggers a read of the ADC result register (directly through DMA or indirectly by triggering an ISR that reads the result), care must be taken to make sure the read occurs after the results latch (otherwise, the previous results are read). If the INTPULSEPOS bit is 0, and the OFFSET field in the ADCINTCYCLE register is not 0, then there is a delay of OFFSET SYSCLK cycles before the ADCINT flag is set. This delay can be used to enter the ISR or trigger the DMA exactly when the sample is ready.
t_{DMA}	The time from the end of the S+H window until a DMA read of the ADC conversion result is triggered.

Copyright © 2026 Texas Instruments Incorporated

Table 6-23. ADC Timings in 12-bit Mode with SAMPCAPRESETSEL = 0

ADCCLK Prescale		SYSCLK Cycles				
ADCCTL2. PRESCALE	Prescale Ratio	t_{EOC}	t_{LAT}	t_{INT} (Early)(1)	t_{INT} (Late)	t_{DMA}
0	1	15	20	1	15	20
2	2	30	35	1	30	35
3	2.5	38	46	1	38	46
4	3	45	50	1	45	50
5	3.5	53	58	1	53	58
6	4	60	65	1	60	65
7	4.5	68	73	1	68	73
8	5	75	80	1	75	80
9	5.5	83	88	1	83	88
10	6	90	95	1	90	95
11	6.5	98	103	1	98	103
12	7	105	110	1	105	110
13	7.5	113	118	1	113	118
14	8	120	125	1	120	125
15	8.5	128	133	1	128	133

(1) By default, t_{INT} occurs one SYSCLK cycle after the S+H window if INTPULSEPOS is 0. This can be changed by writing to the OFFSET field in the ADCINTCYCLE register.

Table 6-24. ADC Timings in 12-bit Mode with SAMPCAPRESETSEL = 1

ADCCLK Prescale		SYSCLK Cycles				
ADCCTL2. PRESCALE	Prescale Ratio	t_{EOC}	t_{LAT}	t_{INT} (Early)(1)	t_{INT} (Late)	t_{DMA}
0	1	14	19	1	14	19
2	2	28	33	1	28	33
3	2.5	35	40	1	35	40
4	3	42	47	1	42	47
5	3.5	49	54	1	49	54
6	4	56	61	1	56	61
7	4.5	63	68	1	63	68
8	5	70	75	1	70	75
9	5.5	77	82	1	77	82
10	6	84	89	1	84	89
11	6.5	91	96	1	91	96
12	7	98	103	1	98	103
13	7.5	105	110	1	105	110
14	8	112	117	1	112	117
15	8.5	119	124	1	119	124

(1) By default, t_{INT} occurs one SYSCLK cycle after the S+H window if INTPULSEPOS is 0. This can be changed by writing to the OFFSET field in the ADCINTCYCLE register.

Copyright © 2026 Texas Instruments Incorporated

6.15.5 Temperature Sensor

6.15.5.1 Temperature Sensor Electrical Data and Timing

The temperature sensor can be used to measure the device junction temperature. The temperature sensor is sampled through an internal connection to the ADC and translated into a temperature through TI-provided software. When sampling the temperature sensor, the ADC must meet the acquisition time in the *Temperature Sensor Characteristics* table.

6.15.5.1.1 Temperature Sensor Characteristics

over recommended operating conditions (unless otherwise noted)

PARAMETER		TEST CONDITIONS	MIN	TYP	MAX	UNIT
T_{acc}	Temperature Accuracy	External reference		±15		°C
$t_{startup}$	Start-up time (TSNSCTL[ENABLE] to sampling temperature sensor)			500		µs
t_{acq}	ADC acquisition time		450			ns

6.15.6 Comparator Subsystem (CMPSS)

The Comparator Subsystem (CMPSS) consists of analog comparators and supporting circuits that are useful for power applications such as peak current mode control, switched-mode power supply, power factor correction, voltage trip monitoring, and so forth.

The comparator subsystem is built around a number of modules. Each subsystem contains two comparators, two reference 12-bit DACs, and two digital filters. The subsystem also includes two ramp generators. The ramp generators ramp up and down. Comparators are denoted "H" or "L" within each module where “H” and “L” represent high and low, respectively. Each comparator generates a digital output which indicates whether the voltage on the positive input is greater than the voltage on the negative input. The positive input of the comparator is driven from an external pin (see the Analog Subsystem chapter of the *TMS320F28P55x Real-Time Microcontrollers Technical Reference Manual* for mux options available to the CMPSS). The negative input can be driven by an external pin or by the programmable reference 12-bit DAC. Each comparator output passes through a programmable digital filter that can remove spurious trip signals. An unfiltered output is also available if filtering is not required. Two ramp generator circuits are optionally available to control the reference 12-bit DAC values for the high and low comparators in the subsystem. The DAC along with a wrapper can be used to generate a ramp which is used for slope compensation in Peak Current Mode Control (PCMC) and other applications.

Each CMPSS includes:

- Two analog comparators
- Two independently programmable reference 12-bit DACs
- Dual decrementing/incrementing ramp generators
- Two digital filters with max filter clock prescale of 2^{24}
- Ability to synchronize submodules with EPWMSYNCPER
- Ability to extend clear signal with EPWMBLANK
- Ability to synchronize output with SYSCLK
- Ability to latch output
- Ability to invert output
- Option to use hysteresis on the input
- Option for negative input of comparator to be driven by an external signal or by the reference DAC
- Option for positive input of comparator to be driven by an external signal or by the PGA
- Option to use the low comparator DAC output, CMPx_DACL, on an external pin (select instances only, mutually exclusive with use of compare functionality)
- External connection to CMPSS filters
- Ramp generator prescaler
- Wake-up from standby and halt LPM (Low Power Modes) triggered by CMPSS trip outputs

Copyright © 2026 Texas Instruments Incorporated

6.15.6.1 CMPx_DACL

Some CMPSS module instances have support for DAC output buffered to a pin. This CMPx_DACL output from the CMPSS module uses the low-side DAC of the CMPSS module specified. When using DAC output from a CMPSS instance, all other CMPSS module features for that instance are unavailable.

For CMPx_DACL instances available for a particular device, please see the DAC column of the *Analog Pins and Internal Connections* table.

See the *Buffered Output from CMPx_DACL Electrical Characteristics* section for DAC output capabilities.

6.15.6.2 CMPSS Connectivity Diagram

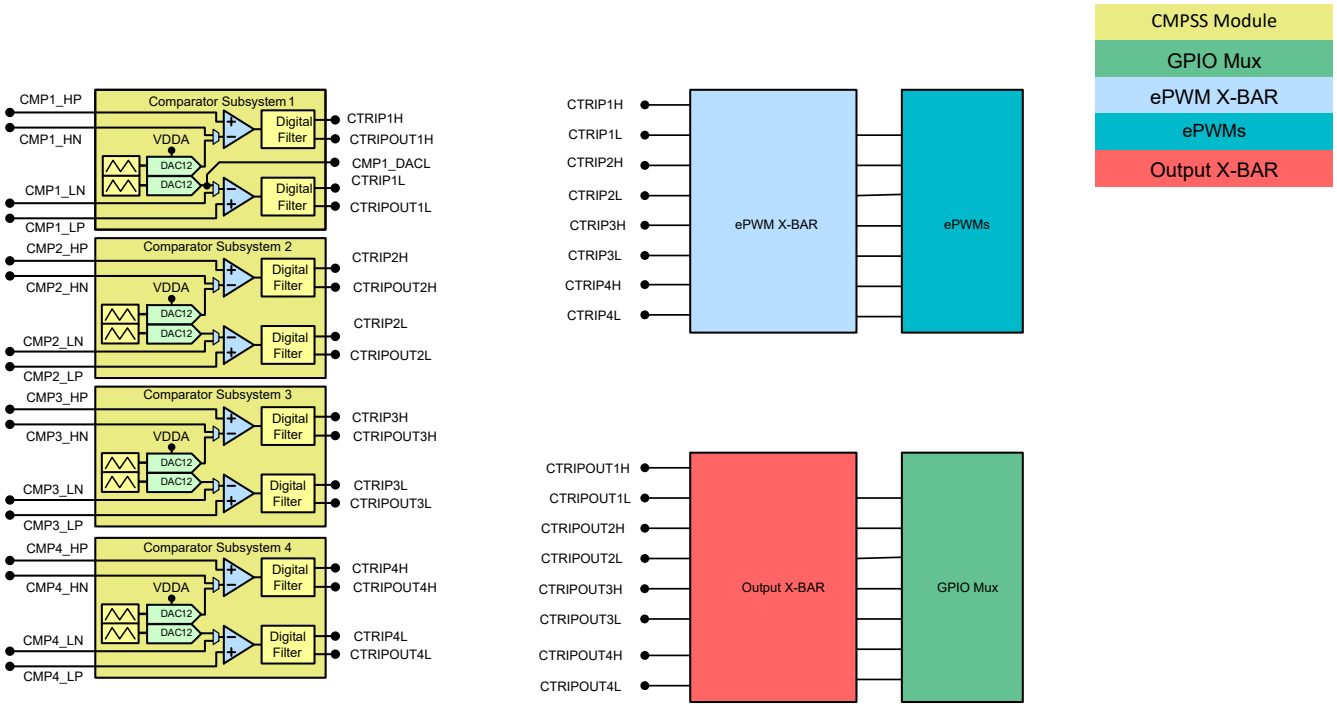

Figure 6-46. CMPSS Connectivity

Copyright © 2026 Texas Instruments Incorporated

6.15.6.3 Block Diagram

The block diagram for the CMPSS is shown in Figure 6-47.

- CTRIPx (x= "H" or "L") signals are connected to the ePWM X-BAR for ePWM trip response. See the Enhanced Pulse Width Modulator (ePWM) chapter of the *TMS320F28P55x Real-Time Microcontrollers Technical Reference Manual* for more details on the ePWM X-BAR mux configuration.
- CTRIPxOUTx (x= "H" or "L") signals are connected to the Output X-BAR for external signaling. See the General-Purpose Input/Output (GPIO) chapter of the *TMS320F28P55x Real-Time Microcontrollers Technical Reference Manual* for more details on the Output X-BAR mux configuration.

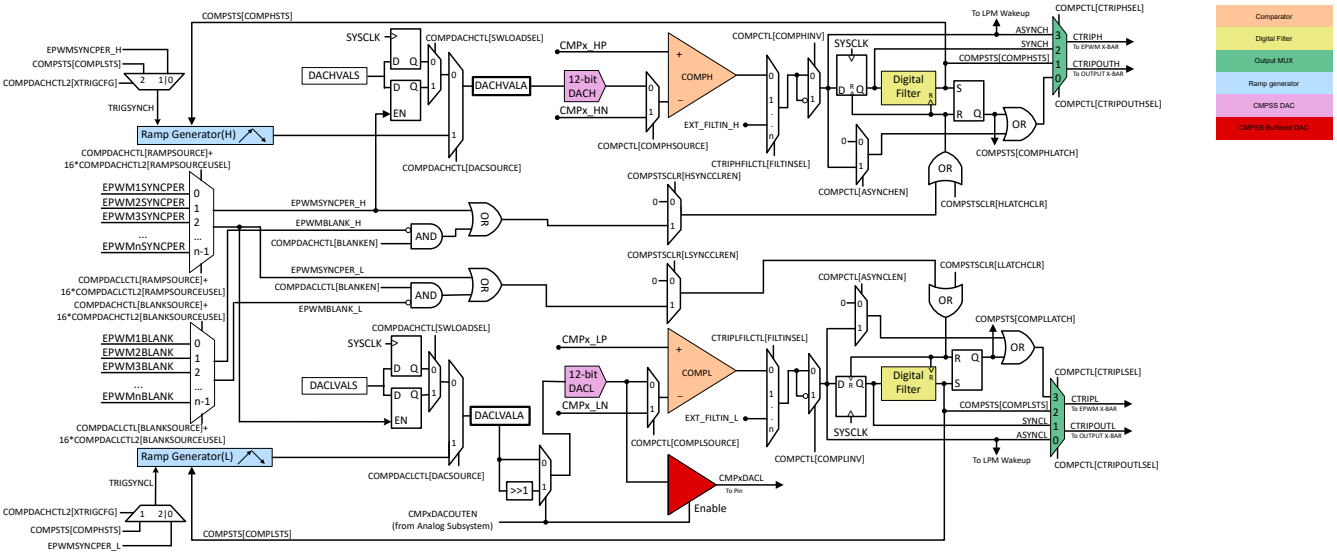

A. CMPx_DACL only exists for the CMPSS 1 module on this device.

B. Enabling the DACL to a pin disables its functionality to the CMPL(low side comparator), the negative input to COMPL must be driven from a device pin in this case.

Figure 6-47. CMPSS Module Block Diagram

Each reference 12-bit DAC can be configured to drive a reference voltage into the negative input of the respective comparator. Some CMPSS instances also allow the low DAC output to be routed to a pin to act as an external DAC. In this case, the DAC output is not available to the COMPL. The negative input to COMPL needs to be driven from the device pin in this case. The reference 12-bit DAC is illustrated in Figure 6-48.

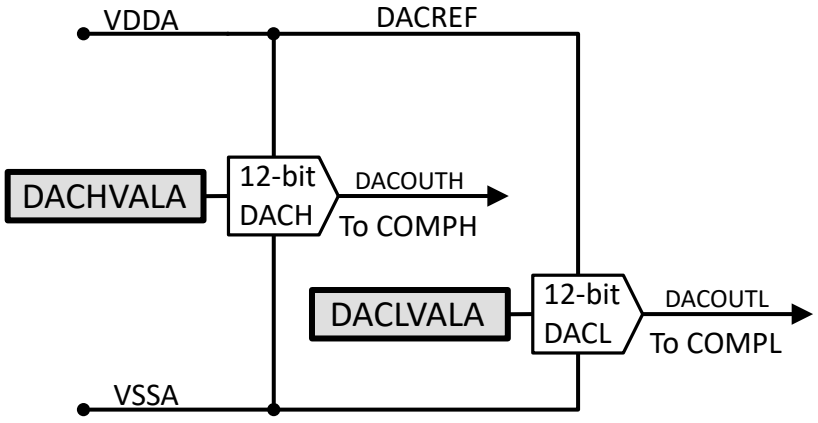

Figure 6-48. Reference DAC Block Diagram

6.15.6.4 CMPSS Electrical Data and Timing

6.15.6.4.1 CMPSS Comparator Electrical Characteristics

over recommended operating conditions (unless otherwise noted)

PARAMETER		TEST CONDITIONS	MIN	TYP	MAX	UNIT
TPU	Power-up time				500	µs
Comparator input (CMPINxx) range			0		VDDA	V
Input referred offset error		Low common mode, inverting input set to 50mV	–20		20	mV
Hysteresis[1]		1x	4	12	20	LSB
		2x	17	24	33	
		3x	25	36	50	
		4x	30	48	67	
Response time (delay from CMPINx input change to output on ePWM X-BAR or Output X-BAR)		Step response		21	60	ns
		Ramp response (1.65V/µs)		26		
		Ramp response (8.25mV/µs)		30		ns
PSRR	Power Supply Rejection Ratio	Up to 250 kHz		46		dB
CMRR	Common Mode Rejection Ratio		40			dB

(1) The CMPSS DAC is used as the reference to determine how much hysteresis to apply. Therefore, hysteresis will scale with the CMPSS DAC reference voltage. Hysteresis is available for all comparator input source configurations.

CMPSS Comparator Input Referred Offset and Hysteresis

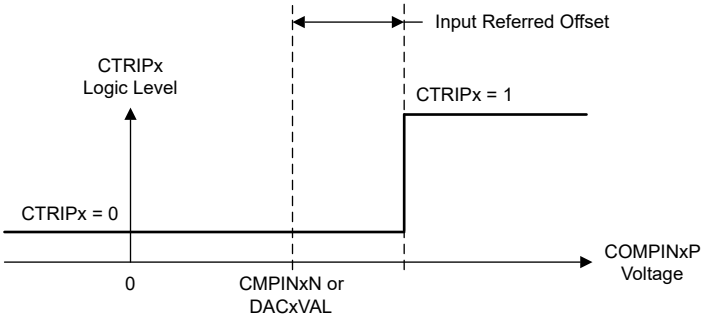

Figure 6-49. CMPSS Comparator Input Referred Offset

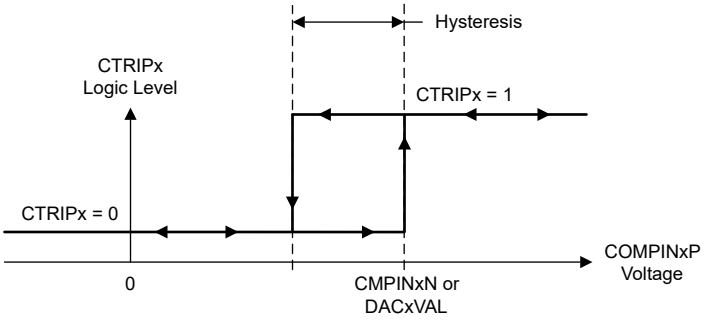

Figure 6-50. CMPSS Comparator Hysteresis

Copyright © 2026 Texas Instruments Incorporated

6.15.6.4.2 CMPSS DAC Static Electrical Characteristics

over recommended operating conditions (unless otherwise noted)

PARAMETER	TEST CONDITIONS	MIN	TYP	MAX	UNIT
CMPSS DAC output range	Internal reference	0		VDDA	V
Static offset error(1)		–25		25	mV
Static gain error(1)		–2		2	% of FSR
Static DNL	Endpoint corrected	>–1		4	LSB
Static INL	Endpoint corrected	–16		16	LSB
Settling time	Settling to 1LSB after full-scale output change			1	µs
Resolution			12		bits
CMPSS DAC output disturbance(2)	Error induced by comparator trip or CMPSS DAC code change within the same CMPSS module	–100		100	LSB
CMPSS DAC disturbance time(2)				200	ns

(1) Includes comparator input referred errors.
(2) Disturbance error may be present on the CMPSS DAC output for a certain amount of time after a comparator trip.

6.15.6.4.3 CMPSS Illustrative Graphs

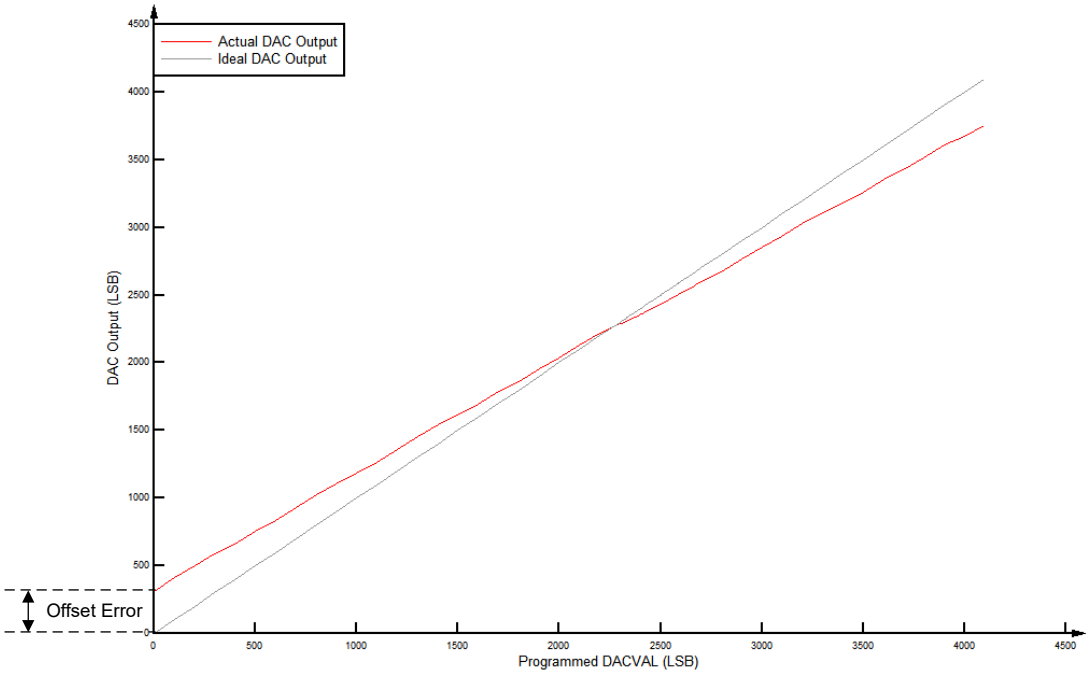

Figure 6-51. CMPSS DAC Static Offset

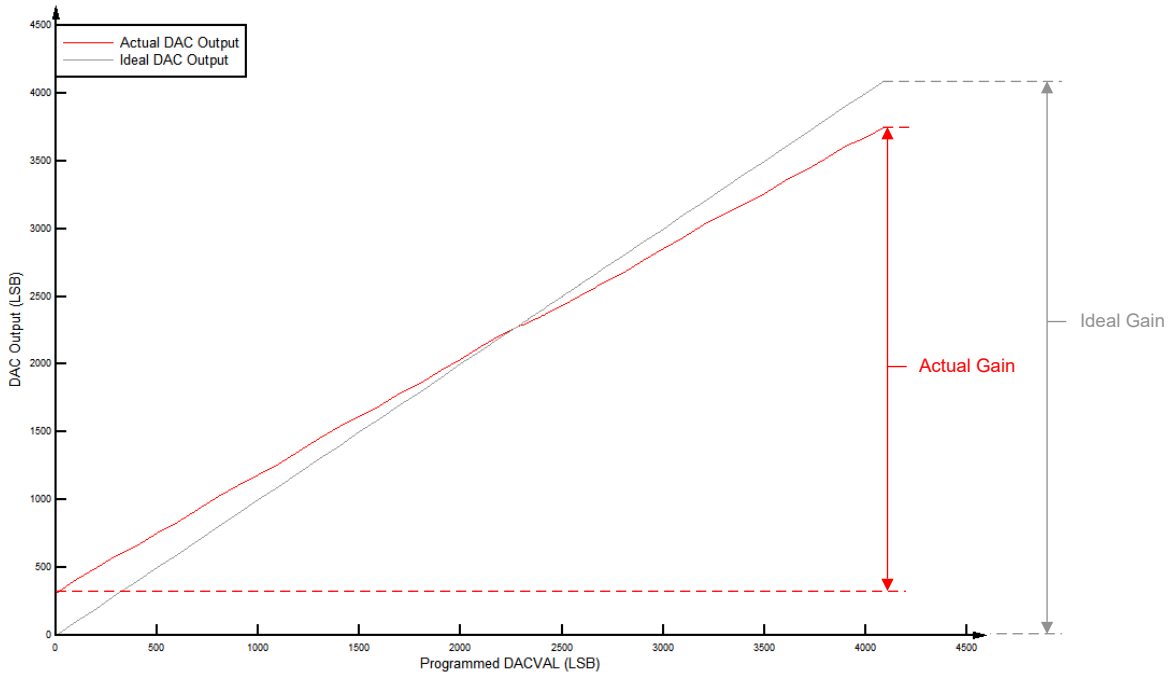

Figure 6-52. CMPSS DAC Static Gain

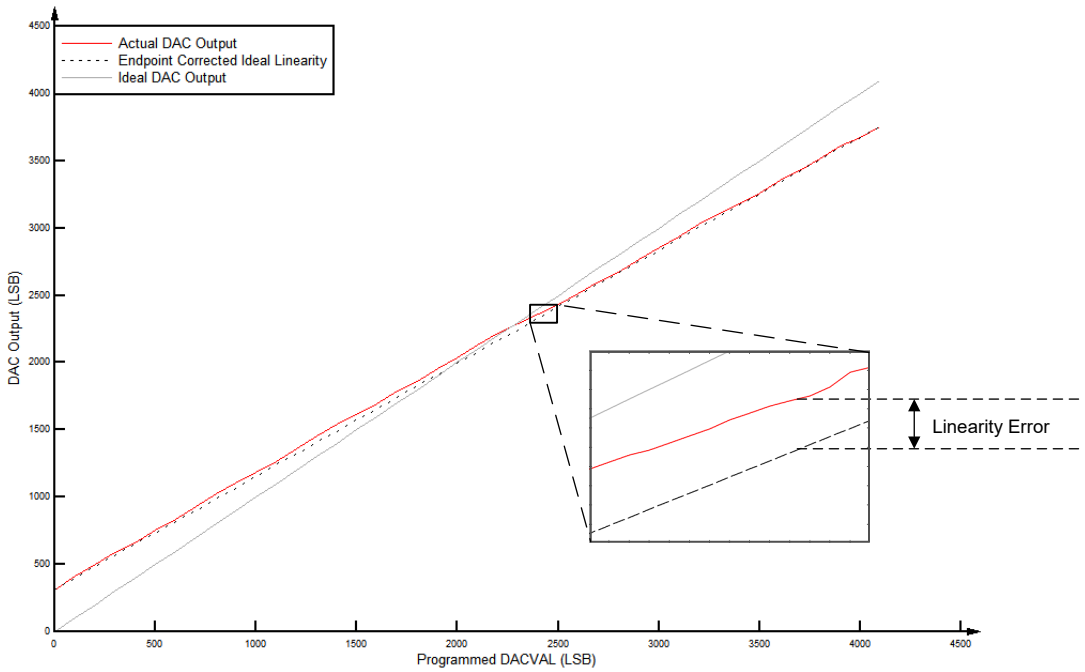

Figure 6-53. CMPSS DAC Static Linearity

6.15.6.4.4 Buffered Output from CMPx_DACL Operating Conditions

over recommended operating conditions (unless otherwise noted)[(1)]

PARAMETER		TEST CONDITIONS	MIN	TYP	MAX	UNIT
R_L	Resistive Load[(2)]		5			kΩ
C_L	Capacitive Load				100	pF

Copyright © 2026 Texas Instruments Incorporated

6.15.6.4.4 Buffered Output from CMPx_DACL Operating Conditions (continued)

over recommended operating conditions (unless otherwise noted)(1)

PARAMETER		TEST CONDITIONS	MIN	TYP	MAX	UNIT
V_{OUT}	Valid Output Voltage Range(3)	R_L = 5 kΩ	0.3		VDDA – 0.3	V
		R_L = 1 kΩ	0.6		VDDA – 0.6	V
Reference Voltage(4)		VREFHI	2.4	2.5 or 3.0	VDDA	V

(1) Typical values are measured with VREFHI = 3.3 V and VREFLO = 0 V, unless otherwise noted. Minimum and maximum values are tested or characterized with VREFHI = 2.5 V and VREFLO = 0 V.
(2) DAC can drive a minimum resistive load of 1 kΩ, but the output range will be limited.
(3) This is the linear output range of the DAC. The DAC can generate voltages outside this range, but the output voltage will not be linear due to the buffer.
(4) For best PSRR performance, VREFHI should be less than VDDA.

6.15.6.4.5 Buffered Output from CMPx_DACL Electrical Characteristics

over recommended operating conditions (unless otherwise noted)(1)

PARAMETER		TEST CONDITIONS	MIN	TYP	MAX	UNIT
General						
Resolution(4)				12		bits
Load Regulation			–1		1	mV/V
Glitch Energy				1.5		V-ns
Voltage Output Settling Time Full-Scale		Settling to 2 LSBs after 0.3V-to-3V transition			2	µs
Voltage Output Settling Time 1/4th Full-Scale		Settling to 2 LSBs after 0.3V-to-0.75V transition			1.6	µs
Voltage Output Slew Rate		Slew rate from 0.3V-to-3V transition	2.8		4.5	V/µs
Load Transient Settling Time		5-kΩ Load			328	ns
TPU	Power Up Time	Bandgap Not Enabled			500	µs
DC Characteristics						
Offset	Offset Error		–100		100	mV
Gain	Gain Error(2)		–1.5		1.5	% of FSR
DNL	Differential Non Linearity(4)	Endpoint corrected	–2		2	LSB (12-bit)
INL	Integral Non Linearity	Endpoint corrected	–10		10	LSB (12-bit)
AC Characteristics						
Output Noise		Integrated noise from 100 Hz to 100 kHz		600		µVrms
		Noise density at 10 kHz		800		nVrms/√Hz
SNR	Signal to Noise Ratio	1 kHz, 200 KSPS		64		dB
THD	Total Harmonic Distortion	1 kHz, 200 KSPS		–64.2		dB
SFDR	Spurious Free Dynamic Range	1 kHz, 200 KSPS		66		dB
SINAD	Signal to Noise and Distortion Ratio	1 kHz, 200 KSPS		61.7		dB
PSRR	Power Supply Rejection Ratio(3)	DC		70		dB
		100 kHz		30		dB

(1) Typical values are measured with VREFHI = 3.3 V and VREFLO = 0 V, unless otherwise noted. Minimum and maximum values are tested or characterized with VREFHI = 2.5 V and VREFLO = 0 V.
(2) Gain error is calculated for linear output range.
(3) VREFHI = 3.2 V, VDDA = 3.3 V DC + 100 mV Sine.
(4) 11-bit effective (monotonic response).

Copyright © 2026 Texas Instruments Incorporated

6.15.7 Buffered Digital-to-Analog Converter (DAC)

The buffered DAC module consists of an internal 12-bit DAC and an analog output buffer that can drive an external load. For driving even higher loads than typical, a trade-off can be made between load size and output voltage swing. For the load conditions of the buffered DAC, see the *Buffered DAC Electrical Data and Timing* section. The buffered DAC is a general-purpose DAC that can be used to generate a DC voltage or AC waveforms such as sine waves, square waves, triangle waves and so forth. Software writes to the DAC value register can take effect immediately or can be synchronized with EPWMSYNCO events.

Each buffered DAC has the following features:

- 12-bit resolution
- Selectable reference voltage source
- x1 and x2 gain modes when using internal VREFHI
- Ability to synchronize with EPWMSYNCPER

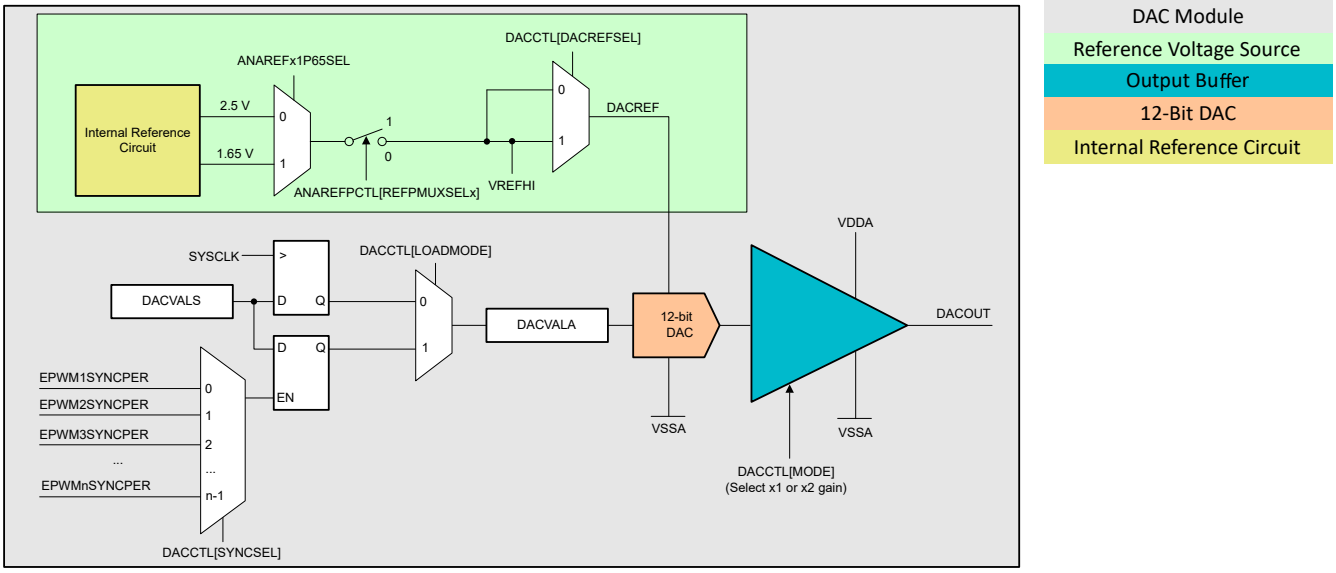

A. VDAC is not available for this device; so, VREFHI and VSSA are the reference voltages.

B. VREFHI voltage is required to use the DAC, at least one ADC must use either INTREF or EXTREF reference source for the DAC to work properly.

Figure 6-54. DAC Module Block Diagram

Copyright © 2026 Texas Instruments Incorporated

6.15.7.1 Buffered DAC Electrical Data and Timing

6.15.7.1.1 Buffered DAC Operating Conditions

over recommended operating conditions (unless otherwise noted)(1)

PARAMETER		TEST CONDITIONS	MIN	TYP	MAX	UNIT
R_L	Resistive Load(2)		5			kΩ
C_L	Capacitive Load				100	pF
V_{OUT}	Valid Output Voltage Range(3)	R_L = 5 kΩ	0.3		VDDA – 0.3	V
		R_L = 1 kΩ	0.6		VDDA – 0.6	V
Reference Voltage(4)		VREFHI	2.4	2.5 or 3.0	VDDA	V

(1) Typical values are measured with VREFHI = 3.3 V and VREFLO = 0 V, unless otherwise noted. Minimum and maximum values are tested or characterized with VREFHI = 2.5 V and VREFLO = 0 V.
(2) DAC can drive a minimum resistive load of 1 kΩ, but the output range will be limited.
(3) This is the linear output range of the DAC. The DAC can generate voltages outside this range, but the output voltage will not be linear due to the buffer.
(4) For best PSRR performance, VREFHI should be less than VDDA.

6.15.7.1.2 Buffered DAC Electrical Characteristics

over recommended operating conditions (unless otherwise noted)(1)

PARAMETER		TEST CONDITIONS	MIN	TYP	MAX	UNIT
General						
Resolution				12		bits
Load Regulation			–1		1	mV/V
Glitch Energy				1.5		V-ns
Voltage Output Settling Time Full-Scale		Settling to 2 LSBs after 0.3V-to-3V transition			2	µs
Voltage Output Settling Time 1/4th Full-Scale		Settling to 2 LSBs after 0.3V-to-0.75V transition			1.6	µs
Voltage Output Slew Rate		Slew rate from 0.3V-to-3V transition	2.8		4.5	V/µs
Load Transient Settling Time		5-kΩ Load			328	ns
		1-kΩ Load			557	ns
Reference Input Resistance(2)		VREFHI	160	200	240	kΩ
TPU	Power Up Time	External Reference mode			500	µs
		Internal Reference mode			5000	µs
DC Characteristics						
Offset	Offset Error	Midpoint	–10		10	mV
Gain	Gain Error(3)		–2.5		2.5	% of FSR
DNL	Differential Non Linearity(4)	Endpoint corrected	–1	±0.4	1	LSB
INL	Integral Non Linearity	Endpoint corrected	–5	±2	5	LSB
AC Characteristics						
Output Noise		Integrated noise from 100 Hz to 100 kHz		600		µVrms
		Noise density at 10 kHz		800		nVrms/√Hz
SNR	Signal to Noise Ratio	1 kHz, 200 KSPS		64		dB
THD	Total Harmonic Distortion	1 kHz, 200 KSPS		–64.2		dB
SFDR	Spurious Free Dynamic Range	1 kHz, 200 KSPS		66		dB
SINAD	Signal to Noise and Distortion Ratio	1 kHz, 200 KSPS		61.7		dB

Copyright © 2026 Texas Instruments Incorporated

6.15.7.1.2 Buffered DAC Electrical Characteristics (continued)

over recommended operating conditions (unless otherwise noted)(1)

PARAMETER		TEST CONDITIONS	MIN	TYP	MAX	UNIT
PSRR	Power Supply Rejection Ratio(5)	DC		70		dB
		100 kHz		30		dB

(1) Typical values are measured with VREFHI = 3.3 V and VREFLO = 0 V, unless otherwise noted. Minimum and maximum values are tested or characterized with VREFHI = 2.5 V and VREFLO = 0 V.
(2) Per active Buffered DAC module.
(3) Gain error is calculated for linear output range.
(4) The DAC output is monotonic.
(5) VREFHI = 3.2 V, VDDA = 3.3 V DC + 100 mV Sine.

Copyright © 2026 Texas Instruments Incorporated

6.15.8 Programmable Gain Amplifier (PGA)

The Programmable Gain Amplifier (PGA) is used to amplify an input voltage for the purpose of increasing the effective resolution of the downstream ADC and CMPSS modules.

The integrated PGA helps to reduce cost and design effort for many control applications that traditionally require external, stand-alone amplifiers. On-chip integration ensures that the PGA is compatible with the downstream ADC and CMPSS modules. Software-selectable gain and filter settings make the PGA adaptable to various performance needs.

The PGA has the following features:

- Rail to rail input and output voltage within VDDA and VSSA range
- Programmable gain modes including unity gain and other values from 2X - 64X
- Standalone gain mode using off-chip passive components
- Post-gain filtering using on-chip resistors
- Differential input support
- Hardware assisted chopping for offset reduction
- Support for Kelvin ground connections using PGA_INM pins

The active component in the PGA is an embedded operational amplifier (op amp) that is configured as a non-inverting or inverting amplifier with internal feedback resistors. These internal feedback resistor values are paired to produce software selectable voltage gains.

Three PGA signals are available at the device pins:

- PGA_INP is the positive input to the PGA op-amp.
- PGA_INM is the negative input to the PGA op-amp. See the device data manual for more information.
- PGA_OUT supports op-amp output filtering with RC components. The filtered signal is available for sampling and monitoring by on-chip ADC and CMPSS modules.

PGA_OUT_INT is an internal signal at the op amp output. It is available for sampling and monitoring by the internal ADC and CMPSS modules. Figure 6-55 shows the PGA block diagram.

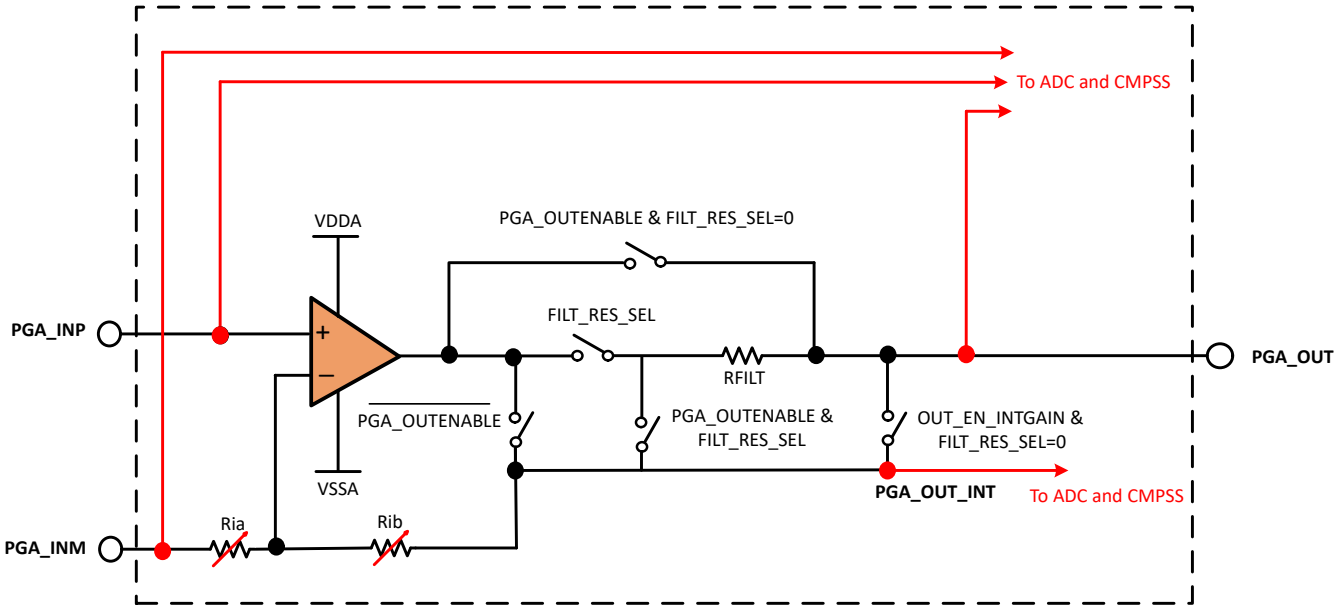

Figure 6-55. PGA Block Diagram

6.15.8.1 PGA Electrical Data and Timing

6.15.8.1.1 PGA Operating Conditions

over recommended operating conditions (unless otherwise noted)

PARAMETER	TEST CONDITIONS	MIN	TYP	MAX	UNIT
PGA Output Range(1)		VSSA+0.025		VDDA-0.025	V
Cap Load on PGA Out			40		pF

(1) This is the linear output range of the PGA. The PGA can output voltages outside this range, but the voltages will not be linear.

6.15.8.1.2 PGA Characteristics

over recommended operating conditions (unless otherwise noted)

PARAMETER	TEST CONDITIONS	MIN	TYP	MAX	UNIT
General					
Min ADC S+H Settling within ±1 ADC LSB Accuracy (No Filter; All Gain Settings; Single ADC Driven) (4)	Gain = 1	125			ns
	Gain = 2/-1	146			
	Gain = 4/-3	125			
	Gain = 8/-7	154			
	Gain = 16/-15	227			
	Gain = 32/-31	322			
	Gain = 64/-63	380			
Min ADC S+H Settling within ±1 ADC LSB Accuracy (No Filter; All Gain Settings; Two ADC Driven) (4)	Gain = 1	146			ns
	Gain = 2/-1	146			
	Gain = 4/-3	113			
	Gain = 8/-7	155			
	Gain = 16/-15	230			
	Gain = 32/-31	352			
	Gain = 64/-63	450			
Gain Settings		1			
		2, 4, 8, 16, 32, 64			
		-1, -3, -7, -15, -31, -63			
Short Circuit Current (5)			41		mA
Full Scale Step Response (No Filter) Settling within 0.05% Accuracy(4)	G = 64/-63			500	ns
	G < 64			420	ns
Settling Time: Gain Switching				10	µs
Slew Rate	Naked OPA Mode		12		V/µs
Slew Rate	Gain = 1		12		V/µs
	Gain = 2/-1		24		V/µs
	Gain = 4/-3		43		V/µs
	Gain = 8/-7		67		V/µs
	Gain = 16/-15		35		V/µs
	Gain = 32/-31		29		V/µs
	Gain = 64/-63		26		V/µs

Copyright © 2026 Texas Instruments Incorporated

6.15.8.1.2 PGA Characteristics (continued)

over recommended operating conditions (unless otherwise noted)

PARAMETER	TEST CONDITIONS	MIN	TYP	MAX	UNIT
R_{ia}	Gain = 1		256		kΩ
	Gain = 2/-1		16		kΩ
	Gain = 4/-3		8		kΩ
	Gain = 8/-7		8		kΩ
	Gain = 16/-15		8		kΩ
	Gain = 32/-31		8		kΩ
	Gain = 64/-63		4		kΩ
R_{ib}	Gain = 1		0		kΩ
	Gain = 2/-1		16		kΩ
	Gain = 4/-3		24		kΩ
	Gain = 8/-7		56		kΩ
	Gain = 16/-15		120		kΩ
	Gain = 32/-31		248		kΩ
	Gain = 64/-63		252		kΩ
Filter Resistor Targets	R_{FILT} = 800 Ω		800		Ω
	R_{FILT} = 400 Ω		400		Ω
	R_{FILT} = 200 Ω		200		Ω
	R_{FILT} = 100 Ω		100		Ω
	R_{FILT} = 50 Ω		50	62	Ω
Gain Bandwidth Product (Naked Op-Amp Mode)	Gain=1		7		MHz
Closed Loop -3db BW	Gain=1		15		MHz
	Gain=2/-1		14		MHz
	Gain=4/-3		13.5		MHz
	Gain=8/-7		12		MHz
	Gain=16/-15		11		MHz
	Gain=32/-31		5.5		MHz
	Gain=64/-63		5.0		MHz
DC Characteristics					
Gain Error(1)	Gain = 1	–0.18		0.18	%
Gain Error(1)	Gain = 2, -1	–0.45		0.45	%
Gain Error(1)	Gain = 4, -3	–0.70		0.70	%
Gain Error(1)	Gain = 8, -7	–0.84		0.84	%
Gain Error(1)	Gain = 16, -15	–0.90		0.90	%
Gain Error(1)	Gain = 32, -31	–1.05		1.05	%
Gain Error(1)	Gain = 64, -63	–1.82		1.82	%
Offset Error(2)	Input Referred	–3.0	+/-1.0	3.0	mV
Offset Temp Coefficient	Input Referred	-7.0		7.0	µV/C
Offset Error - Chopped		-0.8		0.8	mV
Offset Temp Coefficient - Chopped			0.3		µV/C
DC Code Spread	G<64		2.5		12b LSB
	G = 64/-63		4		12b LSB
AC Characteristics					

Copyright © 2026 Texas Instruments Incorporated

6.15.8.1.2 PGA Characteristics (continued)

over recommended operating conditions (unless otherwise noted)

PARAMETER	TEST CONDITIONS	MIN	TYP	MAX	UNIT
Phase Margin Naked OPA	C_{load} = 40pF G=1		45		Deg
Aol (Open loop voltage gain) Naked OPA	R_L=7.5kΩ to GND 0.3V<V_O<VDDA-0.3V		94		dB
THD + Noise (THD+N) Naked OPA	f_{in}=1kHz G=1		82		dB
SNR 10kHz (With ADC)	Gain = 1		68		dB
	Gain = 2, -1		68		
	Gain = 4, -3		66		
	Gain = 8, -7		62		
	Gain = 16, -15		58		
	Gain = 32, -31		55		
	Gain = 64, -63		51		
THD(3)	DC		–78		dB
THD(Up to 100kHz) (3)	Gain = 1		–58		dB
	Gain = 2, -1		–70		
	Gain = 4, -3		–70		
	Gain = 8, -7		–70		
	Gain = 16, -15		–70		
	Gain = 32, -31		–58		
	Gain = 64, -63		–58		
CMRR	DC: V_{IN} <=1.5V		–86		dB
	DC: Full Input Range		-77		dB
	Up to 100 kHz		–50		dB
PSRR(3)	DC		–75		dB
	Up to 10 kHz		–60		dB
	Up to 100 kHz		–40		dB
Noise PSD(3)	1 kHz		200		nV/sqrt(Hz)
	10 kHz		100		nV/sqrt(Hz)
Integrated Noise (Input Referred)(3)	3 Hz to 30 MHz		100		µV

(1) Includes ADC gain error.
(2) Includes ADC offset error.
(3) Performance of PGA alone.
(4) Step response time w filter = tS+H + 7.6*R_{filt}* C_{filt}
(5) Assumes no filter circuit

Copyright © 2026 Texas Instruments Incorporated

6.16 Control Peripherals

6.16.1 Enhanced Pulse Width Modulator (ePWM)

The ePWM peripheral is a key element in controlling many of the power electronic systems found in both commercial and industrial equipment. The ePWM type 4 module is able to generate complex pulse width waveforms with minimal CPU overhead by building the peripheral up from smaller modules with separate resources that can operate together to form a system. Some of the highlights of the ePWM type 4 module include complex waveform generation, dead-band generation, a flexible synchronization scheme, advanced trip-zone functionality, and global register reload capabilities.

The ePWM and eCAP synchronization scheme on the device provides flexibility in partitioning the ePWM and eCAP modules and allows localized synchronization within the modules.

Figure 6-56 shows the ePWM module. Figure 6-57 shows the ePWM trip input connectivity.

Copyright © 2026 Texas Instruments Incorporated

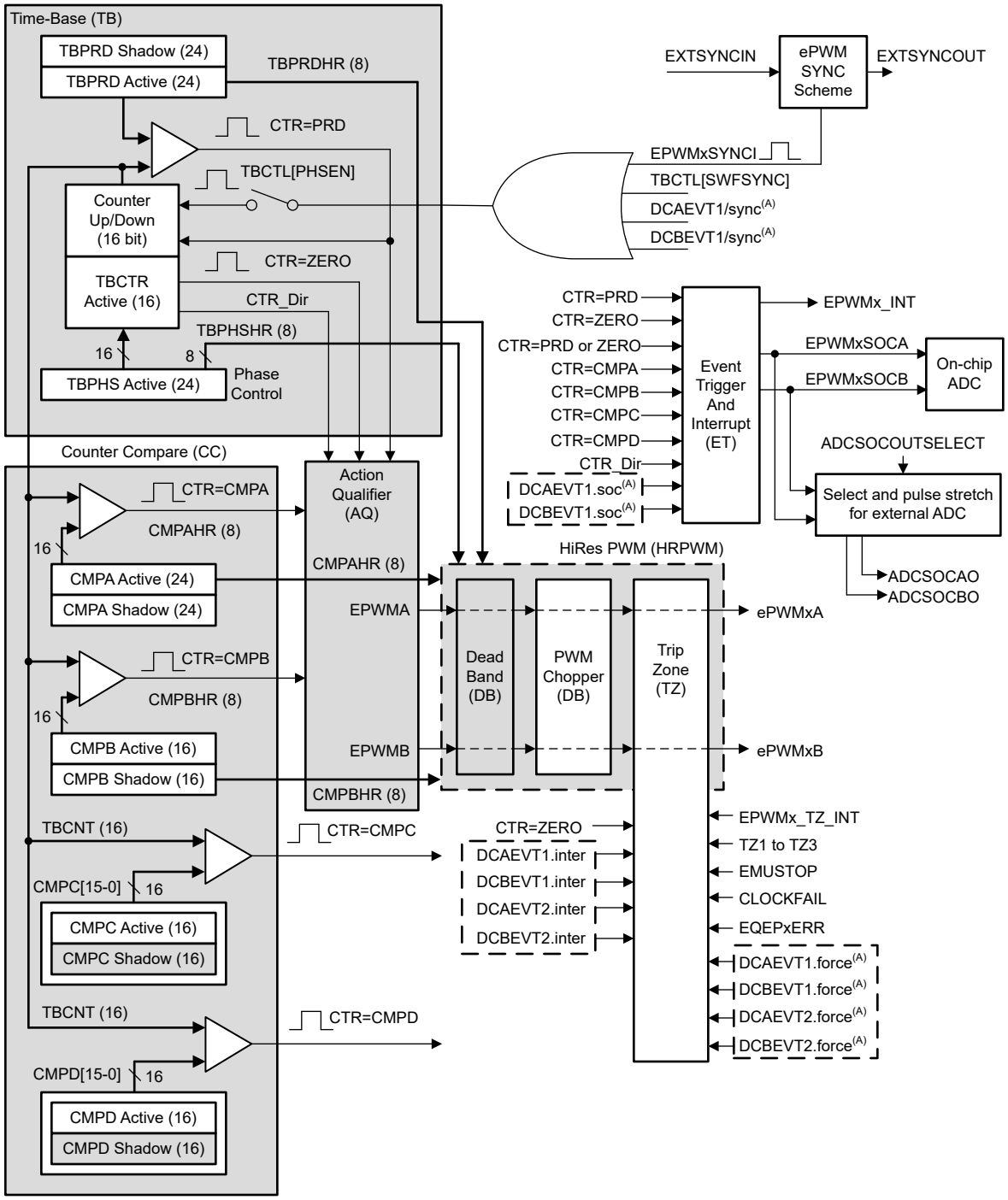

A. These events are generated by the ePWM digital compare (DC) submodule based on the levels of the TRIPIN inputs.

Figure 6-56. ePWM Submodules and Critical Internal Signal Interconnects

Copyright © 2026 Texas Instruments Incorporated

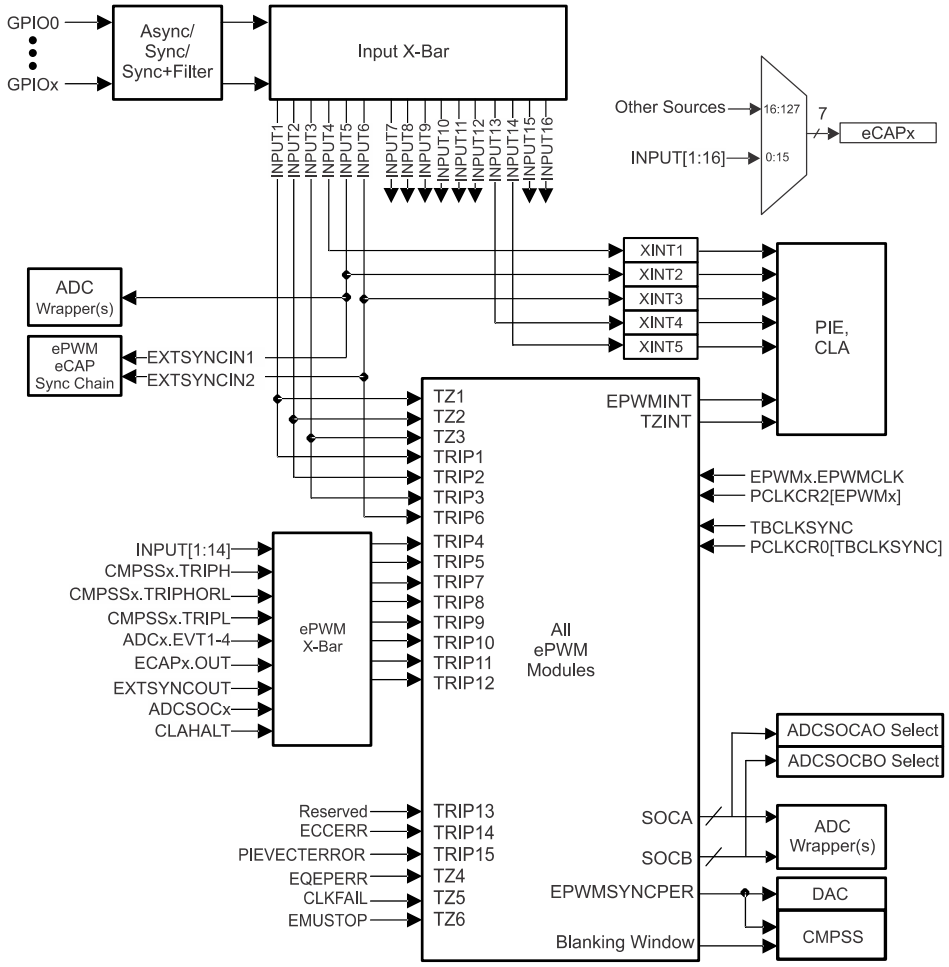

Figure 6-57. ePWM Trip Input Connectivity

6.16.1.1 Control Peripherals Synchronization

The ePWM and eCAP synchronization scheme on the device provides flexibility in partitioning the ePWM and eCAP modules and allows localized synchronization within the modules. Figure 6-58 shows the synchronization scheme.

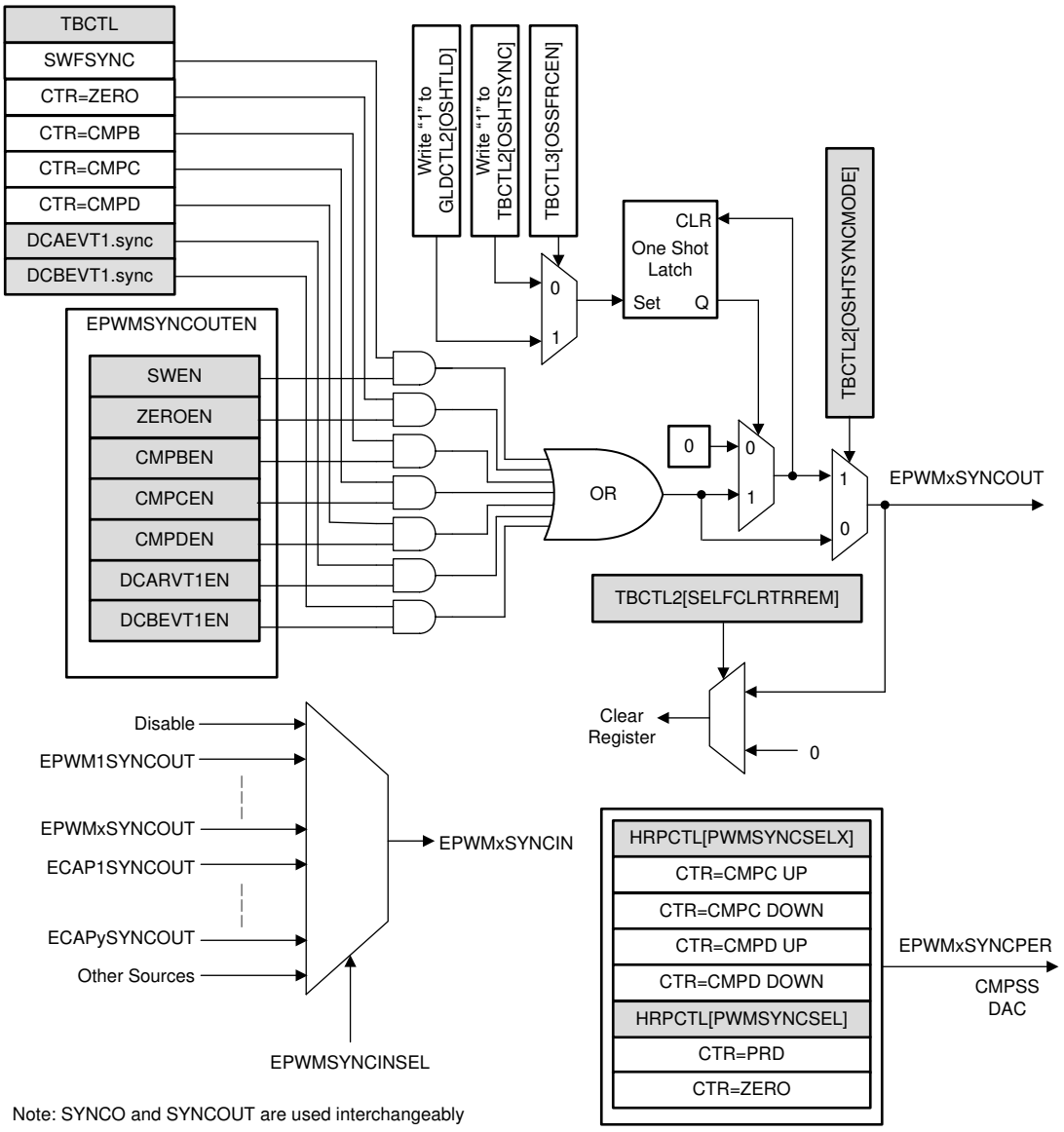

Figure 6-58. Synchronization Chain Architecture

Copyright © 2026 Texas Instruments Incorporated

6.16.1.2 ePWM Electrical Data and Timing

For an explanation of the input qualifier parameters, see the *General-Purpose Input Timing Requirements* table.

6.16.1.2.1 ePWM Timing Requirements

			MIN	MAX	UNIT
$t_{w(SYNCIN)}$	Sync input pulse width	Asynchronous	$2t_{c(EPWMCLK)}$		cycles
		Synchronous	$2t_{c(EPWMCLK)}$		
		With input qualifier	$1t_{c(EPWMCLK)} + t_{w(IQSW)}$		

6.16.1.2.2 ePWM Switching Characteristics

over recommended operating conditions (unless otherwise noted)

PARAMETER[1]		MIN	MAX	UNIT
$t_{w(PWM)}$	Pulse duration, PWMx output high/low	20		ns
$t_{w(SYNCOUT)}$	Sync output pulse width	$8t_{c(SYSCLK)}$		cycles
$t_{d(TZ-PWM)}$	Delay time, trip input active to PWM forced high Delay time, trip input active to PWM forced low Delay time, trip input active to PWM Hi-Z		25	ns

(1) 20-pF load on pin.

6.16.1.2.3 Trip-Zone Input Timing

For an explanation of the input qualifier parameters, see the *General-Purpose Input Timing Requirements* table.

6.16.1.2.3.1 Trip-Zone Input Timing Requirements

			MIN	MAX	UNIT
$t_{w(TZ)}$	Pulse duration, $\overline{TZx}$ input low	Asynchronous	$1t_{c(EPWMCLK)}$		cycles
		Synchronous	$2t_{c(EPWMCLK)}$		cycles
		With input qualifier	$1t_{c(EPWMCLK)} + t_{w(IQSW)}$		cycles

6.16.1.2.3.2 PWM Hi-Z Characteristics Timing Diagram

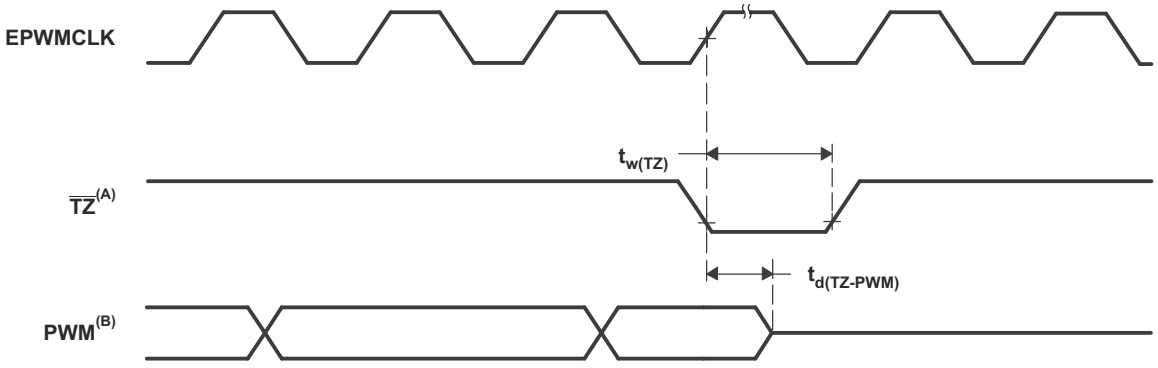

A. $\overline{TZ}$: $\overline{TZ1}$, $\overline{TZ2}$, $\overline{TZ3}$, TRIP1–TRIP12

B. PWM refers to all the PWM pins in the device. The state of the PWM pins after $\overline{TZ}$ is taken high depends on the PWM recovery software.

Figure 6-59. PWM Hi-Z Characteristics

6.16.2 High-Resolution Pulse Width Modulator (HRPWM)

The HRPWM combines multiple delay lines in a single module and a simplified calibration system by using a dedicated calibration delay line. For each ePWM module, there are two HR outputs:

- HR Duty and Deadband control on Channel A
- HR Duty and Deadband control on Channel B

The HRPWM module offers PWM resolution (time granularity) that is significantly better than what can be achieved using conventionally derived digital PWM methods. The key points for the HRPWM module are:

- Significantly extends the time resolution capabilities of conventionally derived digital PWM
- This capability can be used in both single edge (duty cycle and phase-shift control) as well as dual edge control for frequency/period modulation.
- Finer time granularity control or edge positioning is controlled through extensions to the Compare A, B, phase, period and deadband registers of the ePWM module.

6.16.2.1 HRPWM Electrical Data and Timing

6.16.2.1.1 High-Resolution PWM Characteristics

PARAMETER	MIN	TYP	MAX	UNIT
Micro Edge Positioning (MEP) step size(1)		150	310	ps

(1) The MEP step size will be largest at high temperature and minimum voltage on V_{DD}. MEP step size will increase with higher temperature and lower voltage and decrease with lower temperature and higher voltage.
Applications that use the HRPWM feature should use MEP Scale Factor Optimizer (SFO) estimation software functions. See the TI software libraries for details of using SFO functions in end applications. SFO functions help to estimate the number of MEP steps per SYSCLK period dynamically while the HRPWM is in operation.

6.16.3 External ADC Start-of-Conversion Electrical Data and Timing

6.16.3.1 External ADC Start-of-Conversion Switching Characteristics

over recommended operating conditions (unless otherwise noted)

PARAMETER		MIN	MAX	UNIT
$t_{w(ADCSOCL)}$	Pulse duration, $\overline{ADCSOCxO}$ low	$32t_{c(SYSCLK)}$		cycles

6.16.3.2 $\overline{ADCSOCAO}$ or $\overline{ADCSOCBO}$ Timing Diagram

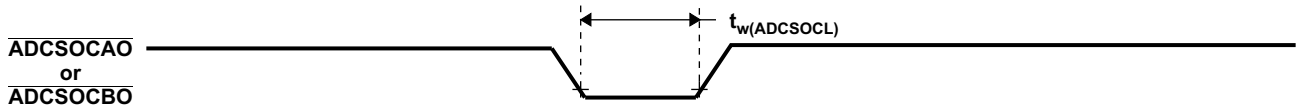

Figure 6-60. $\overline{ADCSOCAO}$ or $\overline{ADCSOCBO}$ Timing

Copyright © 2026 Texas Instruments Incorporated

6.16.4 Enhanced Capture (eCAP)

The features of the eCAP module include:

- Speed measurements of rotating machinery (for example, toothed sprockets sensed by way of Hall sensors)
- Elapsed time measurements between position sensor pulses
- Period and duty cycle measurements of pulse train signals
- Decoding current or voltage amplitude derived from duty cycle encoded current/voltage sensors

The eCAP module features described in this section include:

- 4-event time-stamp registers (each 32 bits)
- Edge polarity selection for up to four sequenced time-stamp capture events
- Interrupt on either of the four events
- Single-shot capture of up to four event time-stamps
- Continuous mode capture of time stamps in a four-deep circular buffer
- Absolute time-stamp capture
- Difference (Delta) mode time-stamp capture
- When not used in capture mode, the eCAP module can be configured as a single-channel PWM output

The capture functionality of the Type 1 eCAP is enhanced from the Type 0 eCAP with the following added features:

- Event filter reset bit
  - Writing a 1 to ECCTL2[CTRFILTRESET] clears the event filter, the modulo counter, and any pending interrupts flags. Resetting the bit is useful for initialization and debug.
- Modulo counter status bits
  - The modulo counter (ECCTL2 [MODCNTRSTS]) indicates which capture register is loaded next. In the Type 0 eCAP, to know the current state of the modulo counter was not possible
- DMA trigger source
  - eCAPxDMA was added as a DMA trigger. CEVT[1-4] can be configured as the source for eCAPxDMA.
- Input multiplexer
  - ECCTL0 [INPUTSEL] selects one of 128 input signals, which are detailed in the *Configuring Device Pins for the eCAP* section of the Enhanced Capture (eCAP) chapter in the *TMS320F28P55x Real-Time Microcontrollers Technical Reference Manual* .
- EALLOW protection
  - EALLOW protection was added to critical registers. To maintain software compatibility with Type-0, configure DEV_CFG_REGS.ECAPTYPE to make these registers unprotected.

The capture functionality of the Type 2 eCAP is enhanced from the Type 1 eCAP with the following added features:

- Added ECAPxSYNCINSEL register
  - ECAPxSYNCINSEL register is added for each eCAP to select an external SYNCIN. Every eCAP can have a separate SYNCIN signal.

Copyright © 2026 Texas Instruments Incorporated

6.16.4.1 eCAP Block Diagram

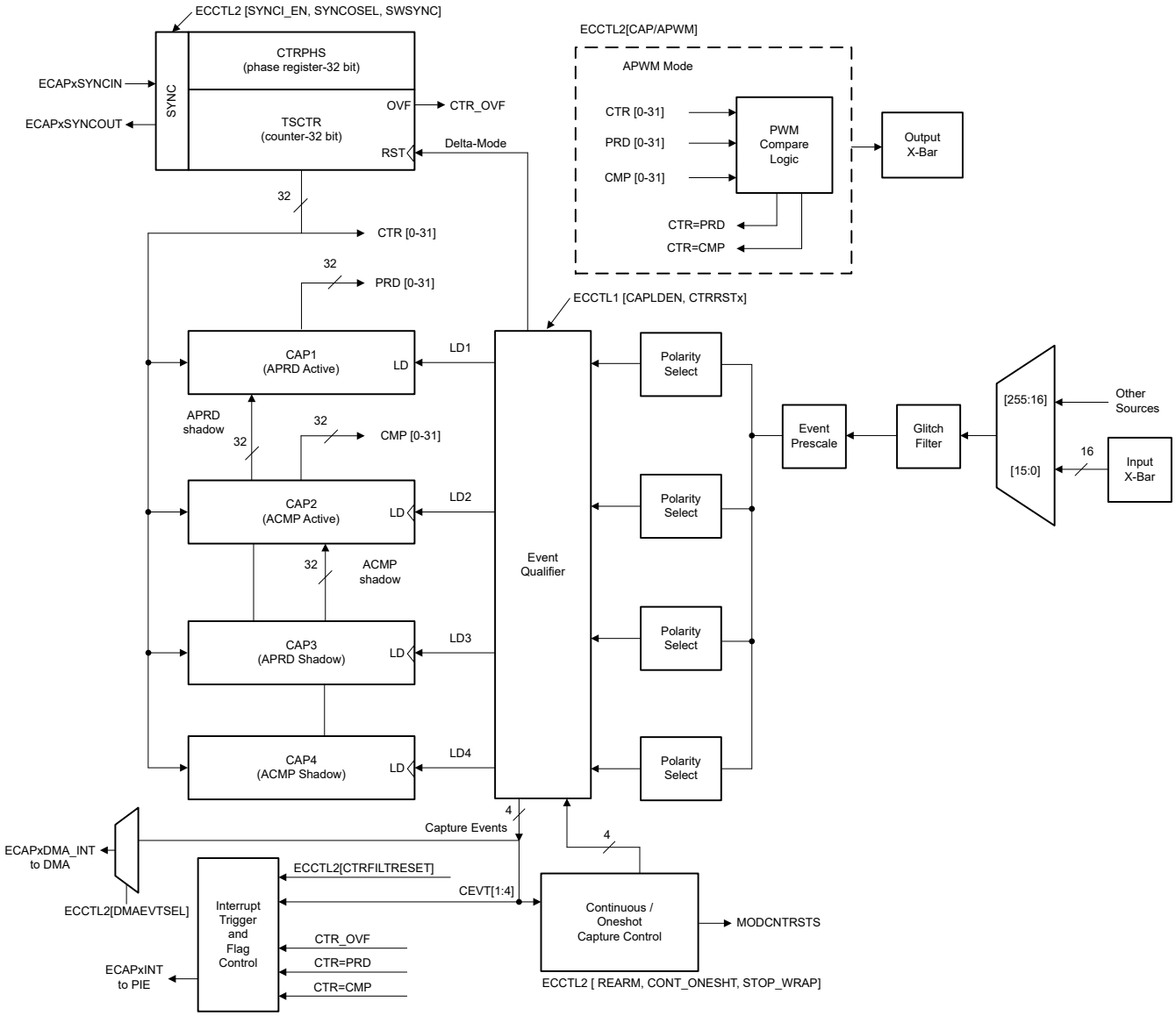

Figure 6-61. eCAP Block Diagram

Copyright © 2026 Texas Instruments Incorporated

6.16.4.2 eCAP Synchronization

The eCAP modules can be synchronized with each other by selecting a common SYNCIN source. SYNCIN source for eCAP can be either software sync-in or external sync-in. The external sync-in signal can come from ePWM, eCAP, or X-Bar. The SYNC signal is defined by the selection in the ECAPxSYNCINSEL[SEL] bit for ECAPx as shown in Figure 6-62.

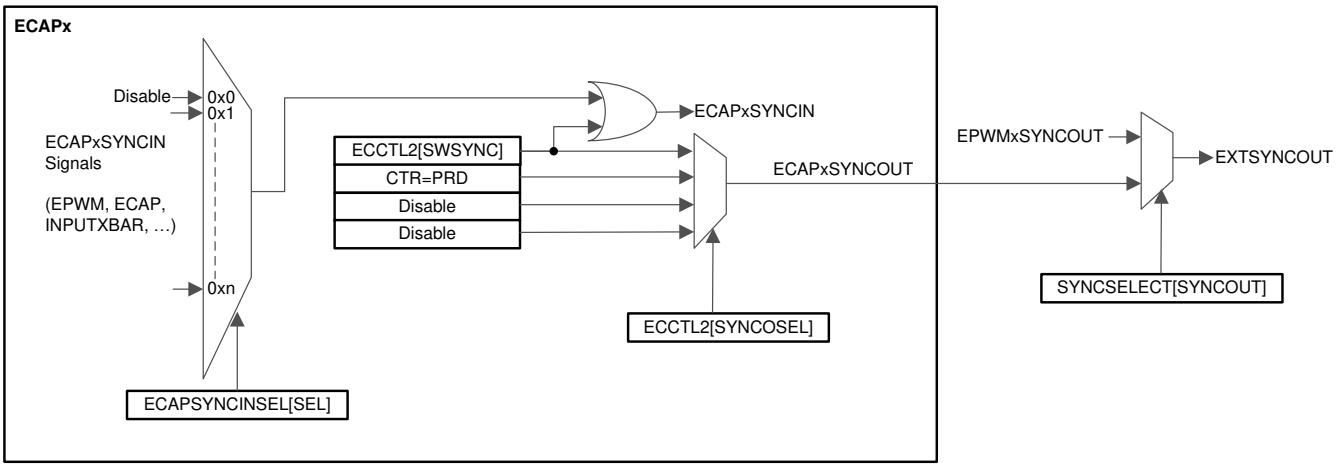

Figure 6-62. eCAP Synchronization Scheme

6.16.4.3 eCAP Electrical Data and Timing

For an explanation of the input qualifier parameters, see the *General-Purpose Input Timing Requirements* table.

6.16.4.3.1 eCAP Timing Requirements

			MIN	NOM	MAX	UNIT
$t_{w(CAP)}$	Capture input pulse width	Asynchronous	$2t_{c(SYSCLK)}$			ns
		Synchronous	$2t_{c(SYSCLK)}$			
		With input qualifier	$1t_{c(SYSCLK)} + t_{w_(IQSW)}$			

6.16.4.3.2 eCAP Switching Characteristics

over recommended operating conditions (unless otherwise noted)

PARAMETER		MIN	TYP	MAX	UNIT
$t_{w(APWM)}$	Pulse duration, APWMx output high/low	20			ns

6.16.5 Enhanced Quadrature Encoder Pulse (eQEP)

The eQEP module on this device is Type-2. The eQEP interfaces directly with linear or rotary incremental encoders to obtain position, direction, and speed information from rotating machines used in high-performance motion and position control systems.

The eQEP peripheral contains the following major functional units (see Figure 6-63):

- Programmable input qualification for each pin (part of the GPIO MUX)
- Quadrature decoder unit (QDU)
- Position counter and control unit for position measurement (PCCU)
- Quadrature edge-capture unit for low-speed measurement (QCAP)
- Unit time base for speed/frequency measurement (UTIME)
- Watchdog timer for detecting stalls (QWDOG)
- Quadrature Mode Adapter (QMA)

Copyright © 2026 Texas Instruments Incorporated

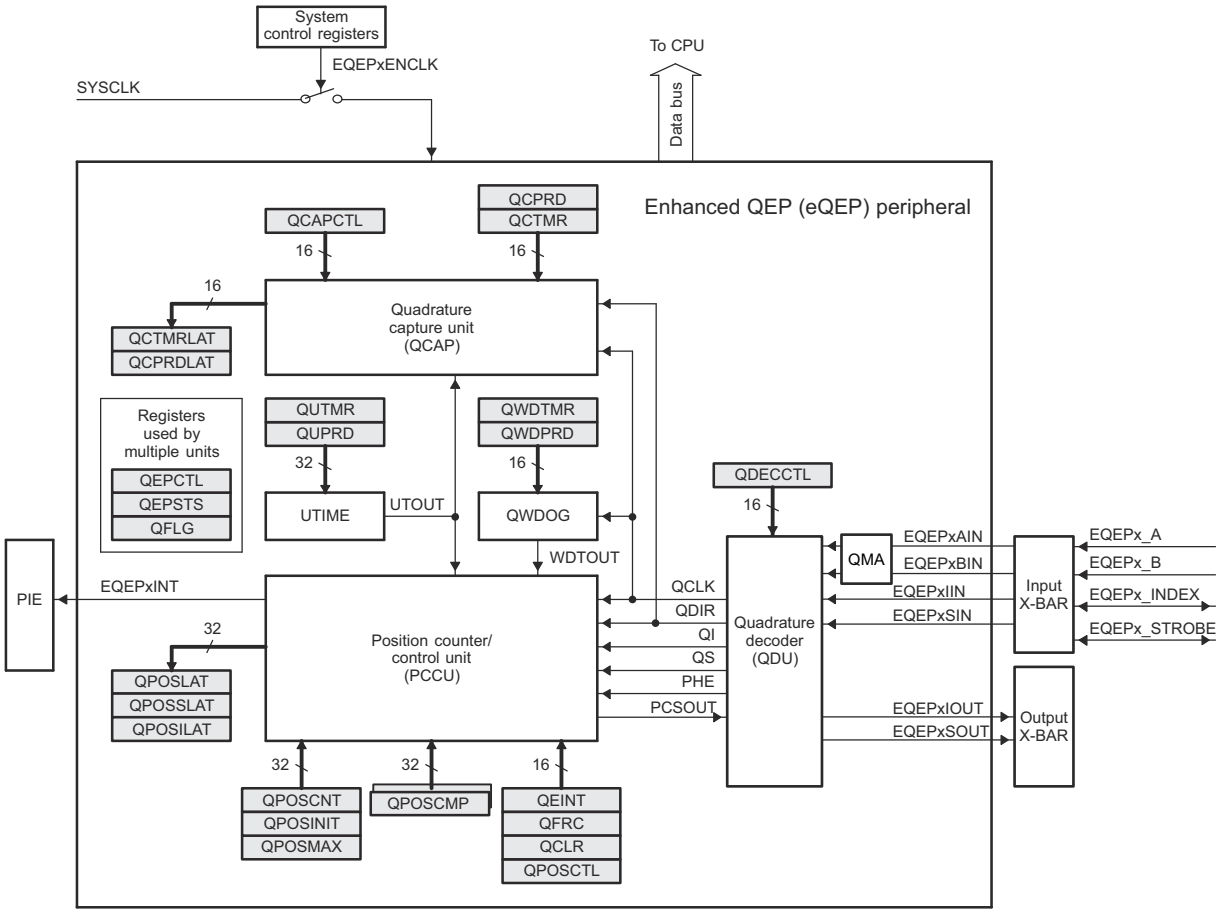

Figure 6-63. eQEP Block Diagram

Copyright © 2026 Texas Instruments Incorporated

6.16.5.1 eQEP Electrical Data and Timing

For an explanation of the input qualifier parameters, see the *General-Purpose Input Timing Requirements* table.

6.16.5.1.1 eQEP Timing Requirements

			MIN	MAX	UNIT
$t_{w(QEPP)}$	QEP input period	Synchronous[1]	$2t_{c(SYSCLK)}$		cycles
		Synchronous with input qualifier	$2[1t_{c(SYSCLK)} + t_{w(IQSW)}]$		
$t_{w(INDEXH)}$	QEP Index Input High time	Synchronous[1]	$2t_{c(SYSCLK)}$		cycles
		Synchronous with input qualifier	$2t_{c(SYSCLK)} + t_{w(IQSW)}$		
$t_{w(INDEXL)}$	QEP Index Input Low time	Synchronous[1]	$2t_{c(SYSCLK)}$		cycles
		Synchronous with input qualifier	$2t_{c(SYSCLK)} + t_{w(IQSW)}$		
$t_{w(STROBH)}$	QEP Strobe High time	Synchronous[1]	$2t_{c(SYSCLK)}$		cycles
		Synchronous with input qualifier	$2t_{c(SYSCLK)} + t_{w(IQSW)}$		
$t_{w(STROBL)}$	QEP Strobe Input Low time	Synchronous[1]	$2t_{c(SYSCLK)}$		cycles
		Synchronous with input qualifier	$2t_{c(SYSCLK)} + t_{w(IQSW)}$		

(1) The GPIO GPxQSELn Asynchronous mode should not be used for eQEP module input pins.

6.16.5.1.2 eQEP Switching Characteristics

over recommended operating conditions (unless otherwise noted)

PARAMETER		MIN	MAX	UNIT
$t_{d(CNTR)xin}$	Delay time, external clock to counter increment		$5t_{c(SYSCLK)}$	cycles
$t_{d(PCS-OUT)QEP}$	Delay time, QEP input edge to position compare sync output		$7t_{c(SYSCLK)}$	cycles

Copyright © 2026 Texas Instruments Incorporated

6.17 Communications Peripherals

6.17.1 Modular Controller Area Network (MCAN)

The Controller Area Network (CAN) is a serial communications protocol that efficiently supports distributed real-time control with a high level of reliability. CAN has high immunity to electrical interference and the ability to detect various type of errors. In CAN, many short messages are broadcast to the entire network, which provides data consistency in every node of the system.

The MCAN module supports both classic CAN and CAN FD (CAN with flexible data-rate) protocols. The CAN FD feature allows higher throughput and increased payload per data frame. Classic CAN and CAN FD devices may coexist on the same network without any conflict provided that partial network transceivers, which can detect and ignore CAN FD without generating bus errors, are used by the classic CAN devices. The MCAN module is compliant to ISO 11898-1:2015.

Note

The availability of the CAN FD feature is dependent on the device's part number.

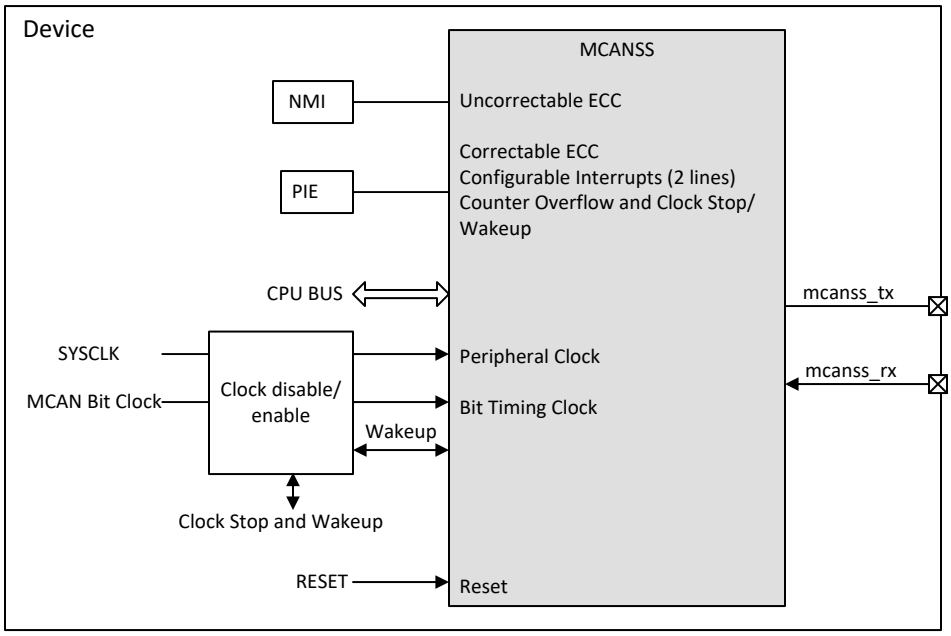

Figure 6-64. MCAN Module Overview

The MCAN module implements the following features:

- Conforms with CAN Protocol 2.0 A, B and ISO 11898-1:2015
- Full CAN FD support (up to 64 data bytes)
- AUTOSAR and SAE J1939 support
- Flexible Message RAM allocation (maximum configuration below is for a device with 4352 32-bit word message RAM)
  - Up to 32 dedicated transmit buffers
  - Configurable transmit FIFO, up to 32 elements
  - Configurable transmit queue, up to 32 elements
  - Configurable transmit Event FIFO, up to 32 elements
  - Up to 64 dedicated receive buffers
  - Two configurable receive FIFOs, up to 64 elements each
  - Up to 128 filter elements
- Loop-back mode for self-test

Copyright © 2026 Texas Instruments Incorporated

- Maskable interrupt (two configurable interrupt lines, correctable ECC, counter overflow and clock stop/ wakeup)
- Non-maskable interrupt (uncorrectable ECC)
- Two clock domains (CAN clock/host clock)
- ECC check for Message RAM
- Clock stop and wake-up support
- Timestamp counter

Non-supported features:

- Host bus firewall
- Clock calibration
- Debug over CAN

6.17.2 Inter-Integrated Circuit (I2C)

The I2C module has the following features:

- Compliance with the NXP Semiconductors I^2C-bus specification (version 2.1):
  - Support for 8-bit format transfers
  - 7-bit and 10-bit addressing modes
  - General call
  - START byte mode
  - Support for multiple controller-transmitters and target-receivers
  - Support for multiple target-transmitters and controller-receivers
  - Combined controller transmit/receive and receive/transmit mode
  - Data transfer rate from 10Kbps up to 400Kbps (Fast-mode)
- Supports voltage thresholds compatible to:
  - SMBus 3.0 and below
  - PMBus 1.3 and below
- One 16-byte receive FIFO and one 16-byte transmit FIFO
- Supports two interrupts
  - I2Cx interrupt – Any of the below conditions can be configured to generate an I2Cx interrupt:
    - Transmit Ready
    - Receive Ready
    - Register-Access Ready
    - No-Acknowledgment
    - Arbitration-Lost
    - Stop Condition Detected
    - Addressed-as-Target
  - I2Cx_FIFO interrupts:
    - Transmit FIFO interrupt
    - Receive FIFO interrupt
- Module enable and disable capability
- Free data format mode

Figure 6-65 shows how the I2C peripheral module interfaces within the device.

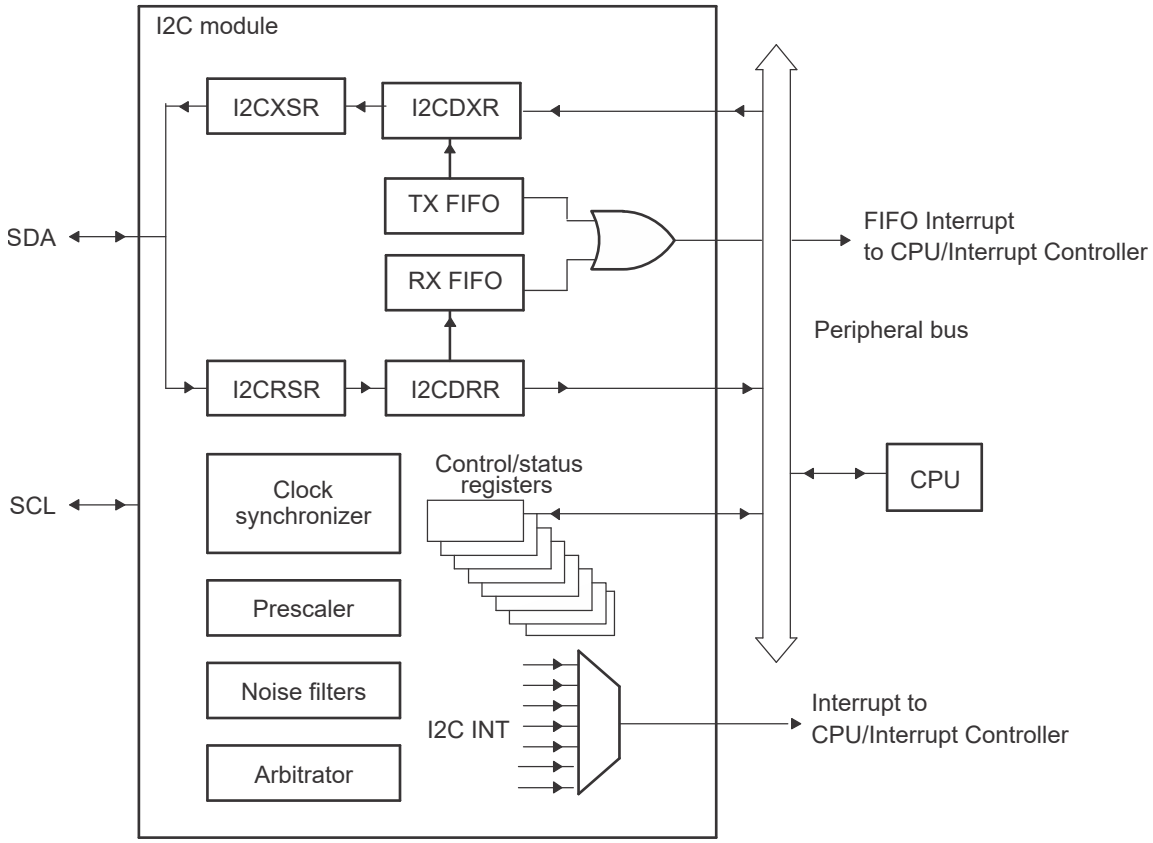

Figure 6-65. I2C Peripheral Module Interfaces

Copyright © 2026 Texas Instruments Incorporated

6.17.2.1 I2C Electrical Data and Timing

Note

To meet all of the I2C protocol timing specifications, the I2C module clock must be configured in the range from 7 MHz to 12 MHz.

A pullup resistor must be chosen to meet the I2C standard timings. In most circumstances, 2.2 kΩ of total bus resistance to VDDIO is sufficient. For evaluating pullup resistor values for a particular design, see the *I2C Bus Pullup Resistor Calculation* Application Note.

6.17.2.1.1 I2C Timing Requirements

NO.			MIN	MAX	UNIT
Standard mode					
T0	f_{mod}	I2C module frequency	7	12	MHz
T1	$t_{h(SDA-SCL)START}$	Hold time, START condition, SCL fall delay after SDA fall	4.0		µs
T2	$t_{su(SCL-SDA)START}$	Setup time, Repeated START, SCL rise before SDA fall delay	4.0		µs
T3	$t_{h(SCL-DAT)}$	Hold time, data after SCL fall	0		µs
T4	$t_{su(DAT-SCL)}$	Setup time, data before SCL rise	250		ns
T5	$t_{r(SDA)}$	Rise time, SDA		1000	ns
T6	$t_{r(SCL)}$	Rise time, SCL		1000	ns
T7	$t_{f(SDA)}$	Fall time, SDA		300	ns
T8	$t_{f(SCL)}$	Fall time, SCL		300	ns
T9	$t_{su(SCL-SDA)STOP}$	Setup time, STOP condition, SCL rise before SDA rise delay	4.0		µs
T10	$t_{w(SP)}$	Pulse duration of spikes that will be suppressed by filter	0	50	ns
T11	C_b	capacitance load on each bus line		400	pF
Fast mode					
T0	f_{mod}	I2C module frequency	7	12	MHz
T1	$t_{h(SDA-SCL)START}$	Hold time, START condition, SCL fall delay after SDA fall	0.6		µs
T2	$t_{su(SCL-SDA)START}$	Setup time, Repeated START, SCL rise before SDA fall delay	0.6		µs
T3	$t_{h(SCL-DAT)}$	Hold time, data after SCL fall	0		µs
T4	$t_{su(DAT-SCL)}$	Setup time, data before SCL rise	100		ns
T5	$t_{r(SDA)}$	Rise time, SDA	20	300	ns
T6	$t_{r(SCL)}$	Rise time, SCL	20	300	ns
T7	$t_{f(SDA)}$	Fall time, SDA	11.4	300	ns
T8	$t_{f(SCL)}$	Fall time, SCL	11.4	300	ns
T9	$t_{su(SCL-SDA)STOP}$	Setup time, STOP condition, SCL rise before SDA rise delay	0.6		µs
T10	$t_{w(SP)}$	Pulse duration of spikes that will be suppressed by filter	0	50	ns
T11	C_b	capacitance load on each bus line		400	pF

Copyright © 2026 Texas Instruments Incorporated

6.17.2.1.2 I2C Switching Characteristics

over recommended operating conditions (unless otherwise noted)

NO.	PARAMETER		TEST CONDITIONS	MIN	MAX	UNIT
Standard mode						
S1	f_{SCL}	SCL clock frequency		0	100	kHz
S2	T_{SCL}	SCL clock period		10		µs
S3	$t_{w(SCLL)}$	Pulse duration, SCL clock low		4.7		µs
S4	$t_{w(SCLH)}$	Pulse duration, SCL clock high		4.0		µs
S5	t_{BUF}	Bus free time between STOP and START conditions		4.7		µs
S6	$t_{v(SCL-DAT)}$	Valid time, data after SCL fall			3.45	µs
S7	$t_{v(SCL-ACK)}$	Valid time, Acknowledge after SCL fall			3.45	µs
S8	I_I	Input current on pins	$0.1\ V_{bus} < V_i < 0.9\ V_{bus}$	–10	10	µA
Fast mode						
S1	f_{SCL}	SCL clock frequency		0	400	kHz
S2	T_{SCL}	SCL clock period		2.5		µs
S3	$t_{w(SCLL)}$	Pulse duration, SCL clock low		1.3		µs
S4	$t_{w(SCLH)}$	Pulse duration, SCL clock high		0.6		µs
S5	t_{BUF}	Bus free time between STOP and START conditions		1.3		µs
S6	$t_{v(SCL-DAT)}$	Valid time, data after SCL fall			0.9	µs
S7	$t_{v(SCL-ACK)}$	Valid time, Acknowledge after SCL fall			0.9	µs
S8	I_I	Input current on pins	$0.1\ V_{bus} < V_i < 0.9\ V_{bus}$	–10	10	µA

6.17.2.1.3 I2C Timing Diagram

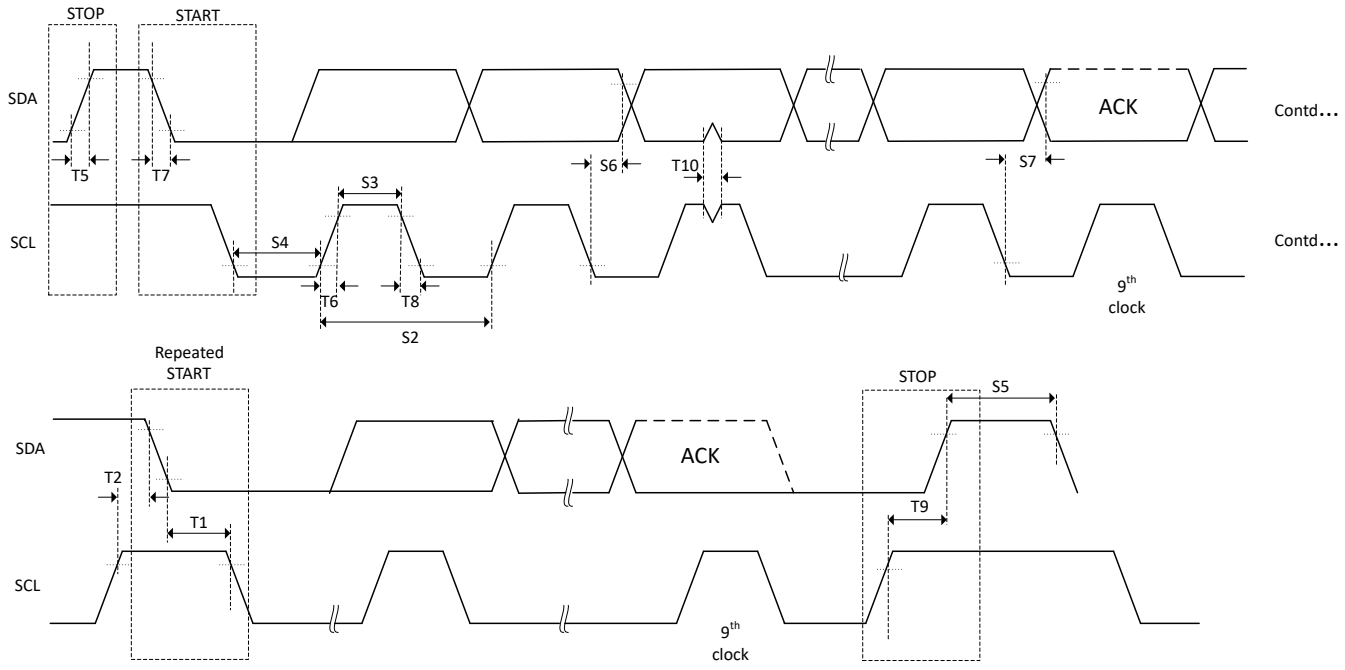

Figure 6-66. I2C Timing Diagram

Copyright © 2026 Texas Instruments Incorporated

6.17.3 Power Management Bus (PMBus) Interface

The PMBus module has the following features:

- Compliance with the SMI Forum PMBus Specification (Part I v1.0 and Part II v1.1)
- Supports voltage thresholds compatible to:
  - PMBus 1.3and below
  - SMBus 3.0and below
- Support for controller and target
- Support for I2C mode
- Support for threespeeds:
  - Standard Mode: Up to 100 kHz
  - Fast Mode: 400 kHz
  - Fast Plus Mode: 1MHz
- Packet error checking
- CONTROL and ALERT signals
- Clock high and low time-outs
- Four-byte transmit and receive buffers
- One maskable interrupt, which can be generated by several conditions:
  - Receive data ready
  - Transmit buffer empty
  - Target address received
  - End of message
  - ALERT input asserted
  - Clock low time-out
  - Clock high time-out
  - Bus free

Note

Please see the *TMS320F28P55x Real-Time Microcontrollers Technical Reference Manual* to determine which pins support Fast Plus Mode as well as full SMBUS3.0 and PMBUS1.3 specifications.

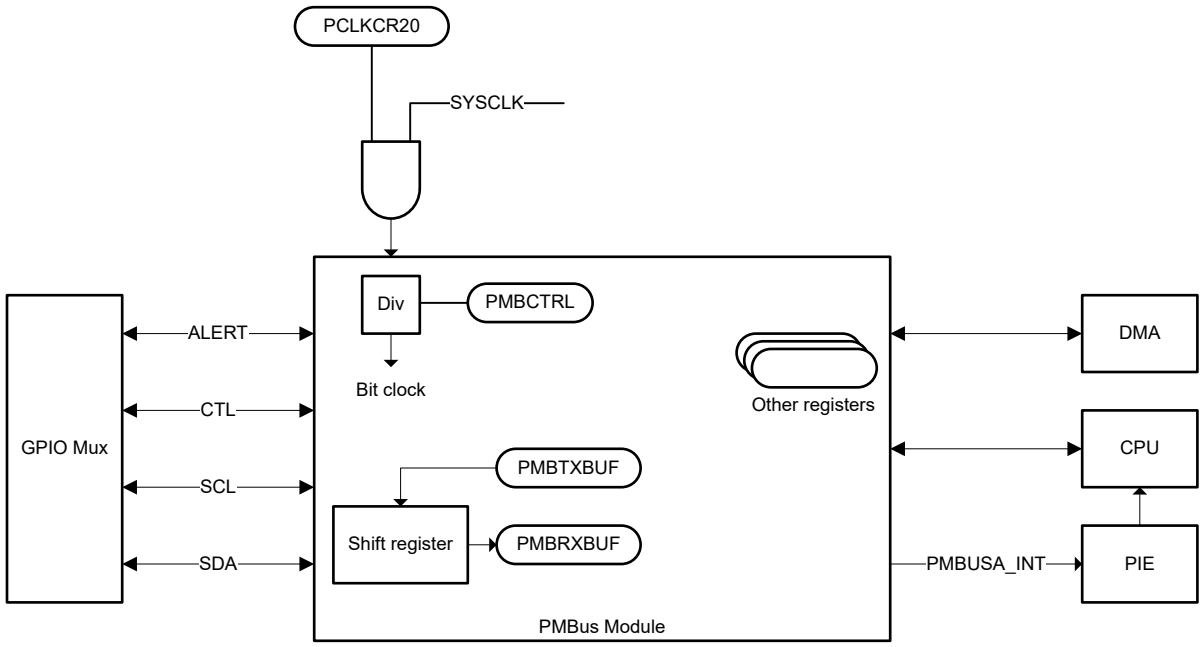

Figure 6-67. PMBus Block Diagram

6.17.3.1 PMBus Electrical Data and Timing

6.17.3.1.1 PMBus Electrical Characteristics

over recommended operating conditions (unless otherwise noted)

PARAMETER		TEST CONDITIONS	MIN	TYP	MAX	UNIT
V_{IL}	Valid low-level input voltage				0.8	V
V_{IH}	Valid high-level input voltage		2.1		VDDIO	V
V_{OL}	Low-level output voltage	At I_{pullup} = 4 mA			0.4	V
I_{OL}	Low-level output current	V_{OL} ≤ 0.4 V	4			mA
t_{SP}	Pulse width of spikes that must be suppressed by the input filter		0		50	ns
I_i	Input leakage current on each pin	0.1 Vbus < Vi < 0.9 Vbus	–10		10	µA
C_i	Capacitance on each pin				10	pF

6.17.3.1.2 PMBus Fast Plus Mode Switching Characteristics

over recommended operating conditions (unless otherwise noted)

PARAMETER		TEST CONDITIONS	MIN	TYP	MAX	UNIT
F_{mod}	PMBus Module Clock Frequency(2)		20		25	MHz
f_{SCL}	SCL clock frequency	3.3V Nominal Bus Voltage	10		1000(3)	kHz
		5.0V Nominal Bus Voltage	10		1000(4)	kHz
t_{BUF}	Bus free time between STOP and START conditions		0.5			µs
$t_{HD;STA}$	START condition hold time -- SDA fall to SCL fall delay		0.26			µs
$t_{SU;STA}$	Repeated START setup time -- SCL rise to SDA fall delay		0.26			µs
$t_{SU;STO}$	STOP condition setup time -- SCL rise to SDA rise delay		0.26			µs
$t_{HD;DAT}$	Data hold time after SCL fall		300			ns
	Data hold time after SCL fall PMBCTRL_ZH_EN = 1 (1)		0			ns
$t_{SU;DAT}$	Data setup time before SCL rise		50			ns
$t_{Timeout}$	Clock low time-out		25		35	ms
t_{LOW}	Low period of the SCL clock		0.5			µs
t_{HIGH}	High period of the SCL clock		0.26		50	µs
$t_{LOW;SEXT}$	Cumulative clock low extend time (target device)	From START to STOP			25	ms
$t_{LOW;MEXT}$	Cumulative clock low extend time (controller device)	Within each byte			10	ms
t_r	Rise time of SDA and SCL	5% to 95%	20		120	ns
t_f	Fall time of SDA and SCL	95% to 5%	20		120	ns

(1) This bit must be set to enable 0ns hold time/SMBUS3.0 Compliance
(2) If the max clock is used all below timings will be met with the default register configurations for the PMBUS
(3) Due to max IO drive strength of 12mA, 1MHz SCL clock is only valid for bus capacitances up to 520pF
(4) Due to max IO drive strength of 12mA, 1MHz SCL clock is only valid for bus capacitances up to 330pF

Copyright © 2026 Texas Instruments Incorporated

6.17.3.1.3 PMBus Fast Mode Switching Characteristics

over recommended operating conditions (unless otherwise noted)

PARAMETER		TEST CONDITIONS	MIN	TYP	MAX	UNIT
F_{mod}	PMBus Module Clock Frequency (2)		$f_{(SYSCLK)}$ / 32		10	MHz
f_{SCL}	SCL clock frequency		10		400	kHz
t_{BUF}	Bus free time between STOP and START conditions		1.3			µs
$t_{HD;STA}$	START condition hold time -- SDA fall to SCL fall delay		0.6			µs
$t_{SU;STA}$	Repeated START setup time -- SCL rise to SDA fall delay		0.6			µs
$t_{SU;STO}$	STOP condition setup time -- SCL rise to SDA rise delay		0.6			µs
$t_{HD;DAT}$	Data hold time after SCL fall		300			ns
	Data hold time after SCL fall PMBCTRL_INC_1[ZH+EN] = 1(1)		0			ns
$t_{SU;DAT}$	Data setup time before SCL rise		100			ns
$t_{Timeout}$	Clock low time-out		25		35	ms
t_{LOW}	Low period of the SCL clock		1.3			µs
t_{HIGH}	High period of the SCL clock		0.6		50	µs
$t_{LOW;SEXT}$	Cumulative clock low extend time (target device)	From START to STOP			25	ms
$t_{LOW;MEXT}$	Cumulative clock low extend time (controller device)	Within each byte			10	ms
t_r	Rise time of SDA and SCL	5% to 95%	20		300	ns
t_f	Fall time of SDA and SCL	95% to 5%	20		300	ns

(1) This bit must be set to enable 0ns hold time/SMBUS3.0 Compliance
(2) If the max clock is used all below timings will be met with the default register configurations for the PMBUS

Copyright © 2026 Texas Instruments Incorporated

6.17.3.1.4 PMBus Standard Mode Switching Characteristics

over recommended operating conditions (unless otherwise noted)

PARAMETER		TEST CONDITIONS	MIN	TYP	MAX	UNIT
F_{mod}	PMBus Module Clock Frequency(2)		$f_{(SYSCLK)}$ / 32		10	MHz
f_{SCL}	SCL clock frequency		10		100	kHz
t_{BUF}	Bus free time between STOP and START conditions		4.7			µs
$t_{HD;STA}$	START condition hold time -- SDA fall to SCL fall delay		4			µs
$t_{SU;STA}$	Repeated START setup time -- SCL rise to SDA fall delay		4.7			µs
$t_{SU;STO}$	STOP condition setup time -- SCL rise to SDA rise delay		4			µs
$t_{HD;DAT}$	Data hold time after SCL fall		300			ns
	Data hold time after SCL fall PMBCTRL_INC_1[ZH+EN] = 1 (1)		0			ns
$t_{SU;DAT}$	Data setup time before SCL rise		250			ns
$t_{Timeout}$	Clock low time-out		25		35	ms
t_{LOW}	Low period of the SCL clock		4.7			µs
t_{HIGH}	High period of the SCL clock		4		50	µs
$t_{LOW;SEXT}$	Cumulative clock low extend time (target device)	From START to STOP			25	ms
$t_{LOW;MEXT}$	Cumulative clock low extend time (controller device)	Within each byte			10	ms
t_r	Rise time of SDA and SCL				1000	ns
t_f	Fall time of SDA and SCL				300	ns

(1) This bit must be set to enable 0ns hold time/SMBUS3.0 Compliance
(2) If the max clock is used all below timings will be met with the default register configurations for the PMBUS

Copyright © 2026 Texas Instruments Incorporated

6.17.4 Serial Communications Interface (SCI)

The SCI is a 2-wire asynchronous serial port, commonly known as a UART. The SCI module supports digital communications between the CPU and other asynchronous peripherals that use the standard non-return-to-zero (NRZ) format

The SCI receiver and transmitter each have a 16-level-deep FIFO for reducing servicing overhead, and each has its own separate enable and interrupt bits. Both can be operated independently for half-duplex communication, or simultaneously for full-duplex communication. To specify data integrity, the SCI checks received data for break detection, parity, overrun, and framing errors. The bit rate is programmable to different speeds through a 16-bit baud-select register.

Features of the SCI module include:

- Two external pins:
  - SCITXD: SCI transmit-output pin
  - SCIRXD: SCI receive-input pin
  - Baud rate programmable to 64K different rates
- Data-word format
  - 1 start bit
  - Data-word length programmable from 1 to 8 bits
  - Optional even/odd/no parity bit
  - 1 or 2 stop bits
- Four error-detection flags: parity, overrun, framing, and break detection
- Two wake-up multiprocessor modes: idle-line and address bit
- Half-duplex or full-duplex operation
- Double-buffered receive and transmit functions
- Transmitter and receiver operations can be accomplished through interrupt-driven or polled algorithms with status flags.
  - Transmitter: TXRDY flag (transmitter-buffer register is ready to receive another character) and TX EMPTY flag (transmitter-shift register is empty)
  - Receiver: RXRDY flag (receiver-buffer register is ready to receive another character), BRKDT flag (break condition occurred), and RX ERROR flag (monitoring four interrupt conditions)
- Separate enable bits for transmitter and receiver interrupts (except BRKDT)
- NRZ format
- Auto baud-detect hardware logic
- 16-level transmit and receive FIFO

Figure 6-68 shows the SCI block diagram.

Copyright © 2026 Texas Instruments Incorporated

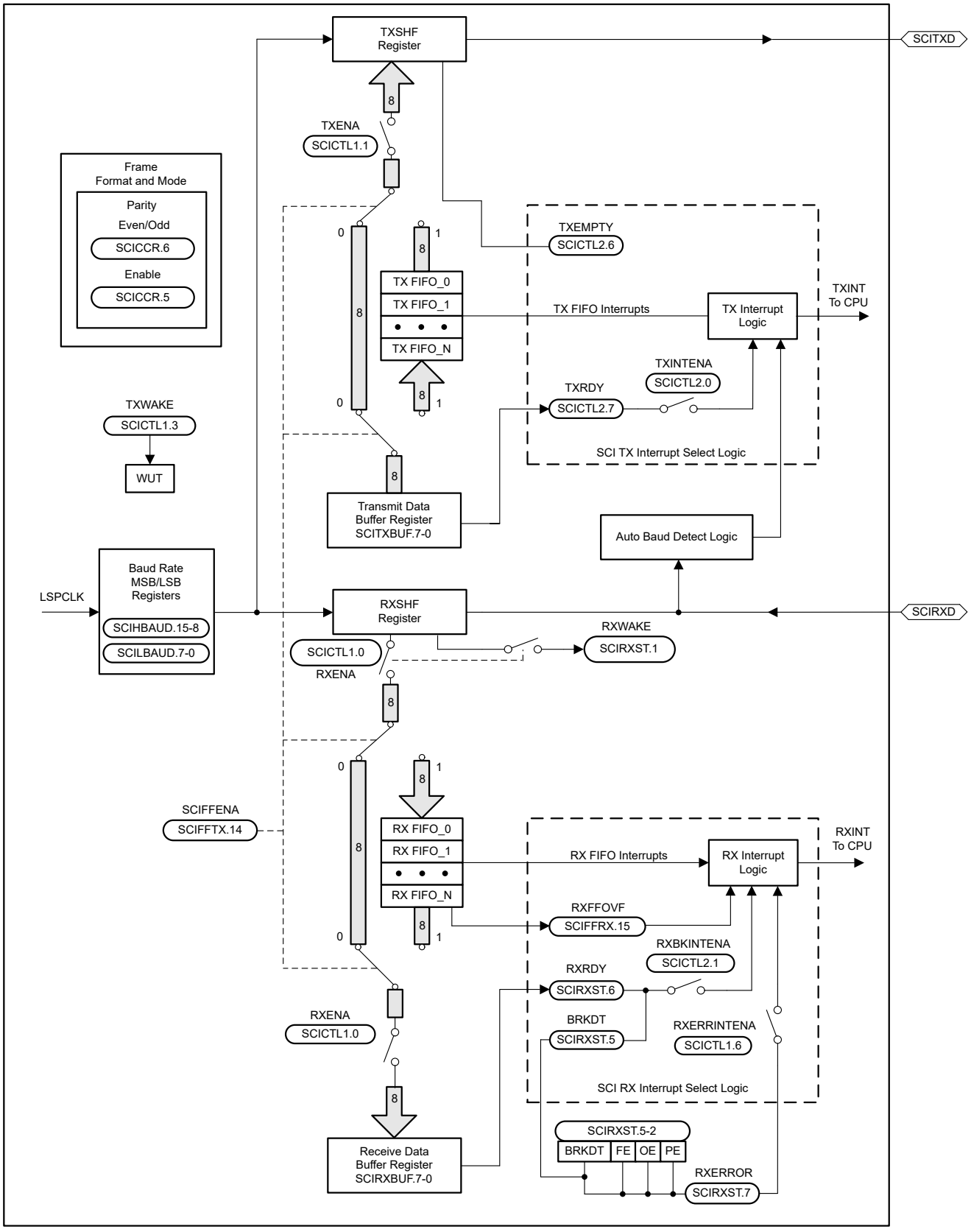

Figure 6-68. SCI Block Diagram

Copyright © 2026 Texas Instruments Incorporated

6.17.5 Serial Peripheral Interface (SPI)

The serial peripheral interface (SPI) is a high-speed synchronous serial input and output (I/O) port that allows a serial bit stream of programmed length (1 to 16 bits) to be shifted into and out of the device at a programmed bit-transfer rate. The SPI is normally used for communications between the MCU controller and external peripherals or another controller. Typical applications include external I/O or peripheral expansion through devices such as shift registers, display drivers, and analog-to-digital converters (ADCs). Multidevice communications are supported by the controller or peripheral operation of the SPI. The port supports a 16-level, receive and transmit FIFO for reducing CPU servicing overhead.

The SPI module features include:

- SPIPOCI: SPI peripheral-output/controller-input pin
- SPIPICO: SPI peripheral-input/controller-output pin
- $\overline{\text{SPIPTE}}$: SPI peripheral transmit-enable pin
- SPICLK: SPI serial-clock pin
- Two operational modes: Controller and Peripheral
- Baud rate: 125 different programmable rates. The maximum baud rate that can be employed is limited by the maximum speed of the I/O buffers used on the SPI pins.
- Data word length: 1 to 16 data bits
- Four clocking schemes (controlled by clock polarity and clock phase bits) include:
  - Falling edge without phase delay: SPICLK active-high. SPI transmits data on the falling edge of the SPICLK signal and receives data on the rising edge of the SPICLK signal.
  - Falling edge with phase delay: SPICLK active-high. SPI transmits data one half-cycle ahead of the falling edge of the SPICLK signal and receives data on the falling edge of the SPICLK signal.
  - Rising edge without phase delay: SPICLK inactive-low. SPI transmits data on the rising edge of the SPICLK signal and receives data on the falling edge of the SPICLK signal.
  - Rising edge with phase delay: SPICLK inactive-low. SPI transmits data one half-cycle ahead of the rising edge of the SPICLK signal and receives data on the rising edge of the SPICLK signal.
- Simultaneous receive and transmit operation (transmit function can be disabled in software)
- Transmitter and receiver operations are accomplished through either interrupt-driven or polled algorithm
- 16-level transmit/receive FIFO
- DMA support
- High-speed mode
- Delayed transmit control
- 3-wire SPI mode
- $\overline{\text{SPIPTE}}$ inversion for digital audio interface receive mode on devices with two SPI modules

Figure 6-69 shows the SPI CPU interfaces.

Copyright © 2026 Texas Instruments Incorporated

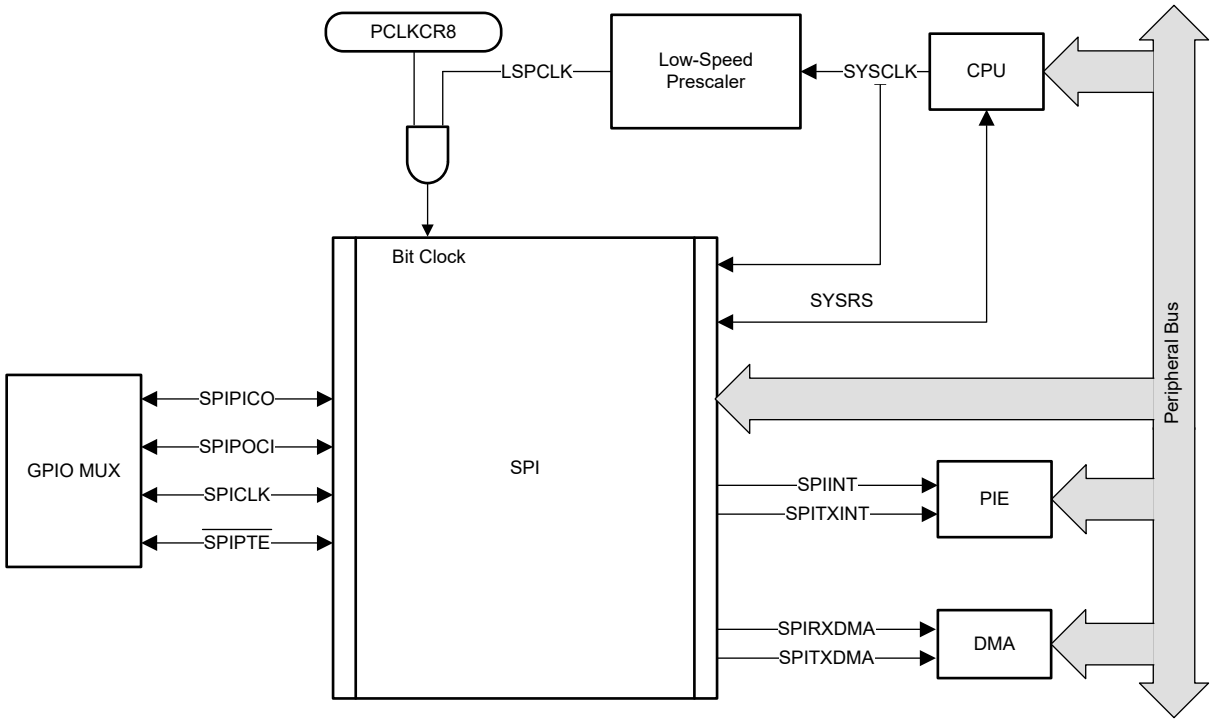

Figure 6-69. SPI CPU Interface

6.17.5.1 SPI Controller Mode Timings

The following sections contain the SPI Controller Mode timings.

Note

All timing parameters for SPI High-Speed Mode assume a load capacitance of 5pF on SPICLK, SPIPICO, and SPIPOCI. In HS_MODE, a maximum clock of 50MHz is supported.

6.17.5.1.1 SPI Controller Mode Timing Requirements

NO.	PARAMETER (2)		(BRR + 1)(1)	MIN	MAX	UNIT
High-Speed Mode						
8	$t_{su(POCI)M}$	Setup time, SPIPOCI valid before SPICLK	Even, Odd	0.7		ns
8	$t_{su(POCI)M}$	Setup time, SPIPOCI valid before SPICLK(when used on pin muxed with PMBUS - GPIO2, 3, 9, or 32)	Even, Odd	1.5		ns
8	$t_{su(POCI)M}$	Setup time, SPIPOCI valid before SPICLK(when used on pin muxed with USB - GPIO23, or 41)	Even, Odd	1.5		ns
9	$t_{h(POCI)M}$	Hold time, SPIPOCI valid after SPICLK	Even, Odd	6.5		ns
Normal Mode						
8	$t_{su(POCI)M}$	Setup time, SPIPOCI valid before SPICLK	Even, Odd	15		ns
8	$t_{su(POCI)M}$	Setup time, SPIPOCI valid before SPICLK(when used on pin muxed with PMBUS - GPIO2, 3, 9, or 32)	Even, Odd	16.5		ns
9	$t_{h(POCI)M}$	Hold time, SPIPOCI valid after SPICLK	Even, Odd	0		ns

(1) The (BRR + 1) condition is Even when (SPIBRR + 1) is even or SPIBRR is 0 or 2. It is Odd when (SPIBRR + 1) is odd and SPIBRR is greater than 3.
(2) GPIOs 2, 3, 9, 23, 32, or 41 do not support full High-Speed Mode(37.5MHz) SPI operation

Copyright © 2026 Texas Instruments Incorporated

6.17.5.1.2 SPI Controller Mode Switching Characteristics - Clock Phase 0

over recommended operating conditions (unless otherwise noted)

NO.	PARAMETER (1) (2) (4)		(BRR + 1)(3)	MIN	MAX	UNIT
General						
1	$t_{c(SPC)M}$	Cycle time, SPICLK	Even	$4t_{c(LSPCLK)}$	$128t_{c(LSPCLK)}$	ns
			Odd	$5t_{c(LSPCLK)}$	$127t_{c(LSPCLK)}$	
2	$t_{w(SPC1)M}$	Pulse duration, SPICLK, first pulse	Even	$0.5t_{c(SPC)M} - 1$	$0.5t_{c(SPC)M} + 1$	ns
			Odd	$0.5t_{c(SPC)M} + 0.5t_{c(LSPCLK)} - 1$	$0.5t_{c(SPC)M} + 0.5t_{c(LSPCLK)} + 1$	
3	$t_{w(SPC2)M}$	Pulse duration, SPICLK, second pulse	Even	$0.5t_{c(SPC)M} - 1$	$0.5t_{c(SPC)M} + 1$	ns
			Odd	$0.5t_{c(SPC)M} - 0.5t_{c(LSPCLK)} - 1$	$0.5t_{c(SPC)M} - 0.5t_{c(LSPCLK)} + 1$	
23	$t_{d(SPC)M}$	Delay time, $\overline{SPIPTE}$ active to SPICLK	Even	$1.5t_{c(SPC)M} - 3t_{c(SYSCLK)} - 3$	$1.5t_{c(SPC)M} - 3t_{c(SYSCLK)} + 3$	ns
			Odd	$1.5t_{c(SPC)M} - 4t_{c(SYSCLK)} - 3$	$1.5t_{c(SPC)M} - 4t_{c(SYSCLK)} + 3$	
23	$t_{d(SPC)M}$	Delay time, $\overline{SPIPTE}$ active to SPICLK(when used on pin muxed with PMBUS - GPIO2, 3, 9, or 32)	Even	$1.5t_{c(SPC)M} - 3t_{c(SYSCLK)} - 4$	$1.5t_{c(SPC)M} - 3t_{c(SYSCLK)} + 3$	ns
			Odd	$1.5t_{c(SPC)M} - 4t_{c(SYSCLK)} - 4$	$1.5t_{c(SPC)M} - 4t_{c(SYSCLK)} + 3$	
23	$t_{d(SPC)M}$	Delay time, $\overline{SPIPTE}$ active to SPICLK(when used on pin muxed with USB - GPIO23 or GPIO41)	Even	$1.5t_{c(SPC)M} - 3t_{c(SYSCLK)} - 3$	$1.5t_{c(SPC)M} - 3t_{c(SYSCLK)} + 5.5$	ns
			Odd	$1.5t_{c(SPC)M} - 4t_{c(SYSCLK)} - 3$	$1.5t_{c(SPC)M} - 4t_{c(SYSCLK)} + 5.5$	
24	$t_{v(STE)M}$	Valid time, SPICLK to $\overline{SPIPTE}$ inactive	Even	$0.5t_{c(SPC)M} - 3$	$0.5t_{c(SPC)M} + 3$	ns
			Odd	$0.5t_{c(SPC)M} - 0.5t_{c(LSPCLK)} - 3$	$0.5t_{c(SPC)M} - 0.5t_{c(LSPCLK)} + 3$	
24	$t_{v(STE)M}$	Valid time, SPICLK to $\overline{SPIPTE}$ inactive(when used on pin muxed with PMBUS - GPIO2, 3, 9, or 32)	Even	$0.5t_{c(SPC)M} - 4$	$0.5t_{c(SPC)M} + 3$	ns
			Odd	$0.5t_{c(SPC)M} - 0.5t_{c(LSPCLK)} - 4$	$0.5t_{c(SPC)M} - 0.5t_{c(LSPCLK)} + 3$	
24	$t_{v(STE)M}$	Valid time, SPICLK to $\overline{SPIPTE}$ inactive(when used on pin muxed with USB - GPIO23 or GPIO41)	Even	$0.5t_{c(SPC)M} - 3$	$0.5t_{c(SPC)M} + 5.5$	ns
			Odd	$0.5t_{c(SPC)M} - 0.5t_{c(LSPCLK)} - 3$	$0.5t_{c(SPC)M} - 0.5t_{c(LSPCLK)} + 5.5$	
High-Speed Mode						
4	$t_{d(PICO)M}$	Delay time, SPICLK to SPIPICO valid	Even, Odd		1	ns
4	$t_{d(PICO)M}$	Delay time, SPICLK to SPIPICO valid(when used on pin muxed with PMBUS - GPIO2, 3, 9, or 32)	Even, Odd		2	ns
5	$t_{v(PICO)M}$	Valid time, SPIPICO valid after SPICLK	Even	$0.5t_{c(SPC)M} - 3$		ns
			Odd	$0.5t_{c(SPC)M} - 0.5t_{c(LSPCLK)} - 3$		
5	$t_{v(PICO)M}$	Valid time, SPIPICO valid after SPICLK(when used on pin muxed with PMBUS - GPIO2, 3, 9, or 32)	Even	$0.5t_{c(SPC)M} - 4.5$		ns
			Odd	$0.5t_{c(SPC)M} - 0.5t_{c(LSPCLK)} - 4.5$		
Normal Mode						
4	$t_{d(PICO)M}$	Delay time, SPICLK to SPIPICO valid	Even, Odd		2	ns
5	$t_{v(PICO)M}$	Valid time, SPIPICO valid after SPICLK	Even	$0.5t_{c(SPC)M} - 3$		ns
			Odd	0.5tc(SPC)M – 0.5tc(LSPCLK) – 3		

Copyright © 2026 Texas Instruments Incorporated

6.17.5.1.2 SPI Controller Mode Switching Characteristics - Clock Phase 0 (continued)

over recommended operating conditions (unless otherwise noted)

NO.	PARAMETER (1) (2) (4)		(BRR + 1)(3)	MIN	MAX	UNIT
5	$t_{v(PICO)M}$	Valid time, SPIPICO valid after SPICLK(when used on pin muxed with PMBUS - GPIO2, 3, 9, or 32)	Even	$0.5t_{c(SPC)M} – 4.5$		ns
			Odd	0.5tc(SPC)M – 0.5tc(LSPCLK) – 4.5		

(1) 10-pF load on pin for High-Speed Mode.
(2) 20-pF load on pin for Normal Mode.
(3) The (BRR + 1) condition is Even when (SPIBRR + 1) is even or SPIBRR is 0 or 2. It is Odd when (SPIBRR + 1) is odd and SPIBRR is greater than 3.
(4) GPIOs 2, 3, 9, 23, 32, or 41 do not support full High-Speed Mode(37.5MHz) SPI operation

Copyright © 2026 Texas Instruments Incorporated

6.17.5.1.3 SPI Controller Mode Switching Characteristics - Clock Phase 1

over recommended operating conditions (unless otherwise noted)

NO.	PARAMETER(1) (2) (4)		(BRR + 1) (3)	MIN	MAX	UNIT
General						
1	$t_{c(SPC)M}$	Cycle time, SPICLK	Even	$4t_{c(LSPCLK)}$	$128t_{c(LSPCLK)}$	ns
			Odd	$5t_{c(LSPCLK)}$	$127t_{c(LSPCLK)}$	
2	$t_{w(SPCH)M}$	Pulse duration, SPICLK, first pulse	Even	$0.5t_{c(SPC)M} - 1$	$0.5t_{c(SPC)M} + 1$	ns
			Odd	$0.5t_{c(SPC)M} - 0.5t_{c(LSPCLK)} - 1$	$0.5t_{c(SPC)M} - 0.5t_{c(LSPCLK)} + 1$	
3	$t_{w(SPC2)M}$	Pulse duration, SPICLK, second pulse	Even	$0.5t_{c(SPC)M} - 1$	$0.5t_{c(SPC)M} + 1$	ns
			Odd	$0.5t_{c(SPC)M} + 0.5t_{c(LSPCLK)} - 1$	$0.5t_{c(SPC)M} + 0.5t_{c(LSPCLK)} + 1$	
23	$t_{d(SPC)M}$	Delay time, $\overline{SPIPTE}$ valid to SPICLK	Even, Odd	$2t_{c(SPC)M} - 3t_{c(SYSCLK)} - 3$	$2t_{c(SPC)M} - 3t_{c(SYSCLK)} + 3$	ns
23	$t_{d(SPC)M}$	Delay time, $\overline{SPIPTE}$ valid to SPICLK(when used on pin muxed with PMBUS - GPIO2, 3, 9, or 32)	Even, Odd	$2t_{c(SPC)M} - 3t_{c(SYSCLK)} - 4$	$2t_{c(SPC)M} - 3t_{c(SYSCLK)} + 3$	ns
23	$t_{d(SPC)M}$	Delay time, $\overline{SPIPTE}$ valid to SPICLK(when used on pin muxed with USB - GPIO23 or GPIO41)	Even, Odd	$2t_{c(SPC)M} - 3t_{c(SYSCLK)} - 3$	$2t_{c(SPC)M} - 3t_{c(SYSCLK)} + 5.5$	ns
24	$t_{d(STE)M}$	Delay time, SPICLK to $\overline{SPIPTE}$ invalid	Even	–3	3	ns
			Odd	–3	3	
24	$t_{d(STE)M}$	Delay time, SPICLK to $\overline{SPIPTE}$ invalid(when used on pin muxed with PMBUS - GPIO2, 3, 9, or 32)	Even	-4	3	ns
			Odd	-4	3	
24	$t_{d(STE)M}$	Delay time, SPICLK to $\overline{SPIPTE}$ invalid(when used on pin muxed with USB - GPIO23 or GPIO41)	Even	–3	5.5	ns
			Odd	–3	5.5	
High-Speed Mode						
4	$t_{d(PICO)M}$	Delay time, SPIPICO valid to SPICLK	Even	$0.5t_{c(SPC)M} - 2$		ns
			Odd	$0.5t_{c(SPC)M} + 0.5t_{c(LSPCLK)} - 2$		
4	$t_{d(PICO)M}$	Delay time, SPIPICO valid to SPICLK (when used on pin muxed with PMBUS - GPIO2, 3, 9, or 32)	Even	$0.5t_{c(SPC)M} - 3$		ns
			Odd	$0.5t_{c(SPC)M} + 0.5t_{c(LSPCLK)} - 3$		
5	$t_{v(PICO)M}$	Valid time, SPIPICO valid after SPICLK	Even	$0.5t_{c(SPC)M} - 3$		ns
			Odd	$0.5t_{c(SPC)M} - 0.5t_{c(LSPCLK)} - 3$		
5	$t_{v(PICO)M}$	Valid time, SPIPICO valid after SPICLK (when used on pin muxed with PMBUS - GPIO2, 3, 9, or 32)	Even	$0.5t_{c(SPC)M} - 4.5$		ns
			Odd	$0.5t_{c(SPC)M} - 0.5t_{c(LSPCLK)} - 4.5$		
Normal Mode						
4	$t_{d(PICO)M}$	Delay time, SPIPICO valid to SPICLK	Even	$0.5t_{c(SPC)M} - 2$		ns
			Odd	$0.5t_{c(SPC)M} + 0.5t_{c(LSPCLK)} - 2$		
5	$t_{v(PICO)M}$	Valid time, SPIPICO valid after SPICLK	Even	$0.5t_{c(SPC)M} - 3$		ns
			Odd	$0.5t_{c(SPC)M} - 0.5t_{c(LSPCLK)} - 3$		
5	$t_{v(PICO)M}$	Valid time, SPIPICO valid after SPICLK (when used on pin muxed with PMBUS - GPIO2, 3, 9, or 32)	Even	$0.5t_{c(SPC)M} - 4.5$		ns
			Odd	$0.5t_{c(SPC)M} - 0.5t_{c(LSPCLK)} - 4.5$		

(1) 10-pF load on pin for High-Speed Mode.
(2) 20-pF load on pin for Normal Mode.
(3) The (BRR + 1) condition is Even when (SPIBRR + 1) is even or SPIBRR is 0 or 2. It is Odd when (SPIBRR + 1) is odd and SPIBRR is greater than 3.
(4) GPIOs 2, 3, 9, 23, 32, or 41 do not support full High-Speed Mode(37.5MHz) SPI operation

Copyright © 2026 Texas Instruments Incorporated

6.17.5.1.4 SPI Controller Mode Timing Diagrams

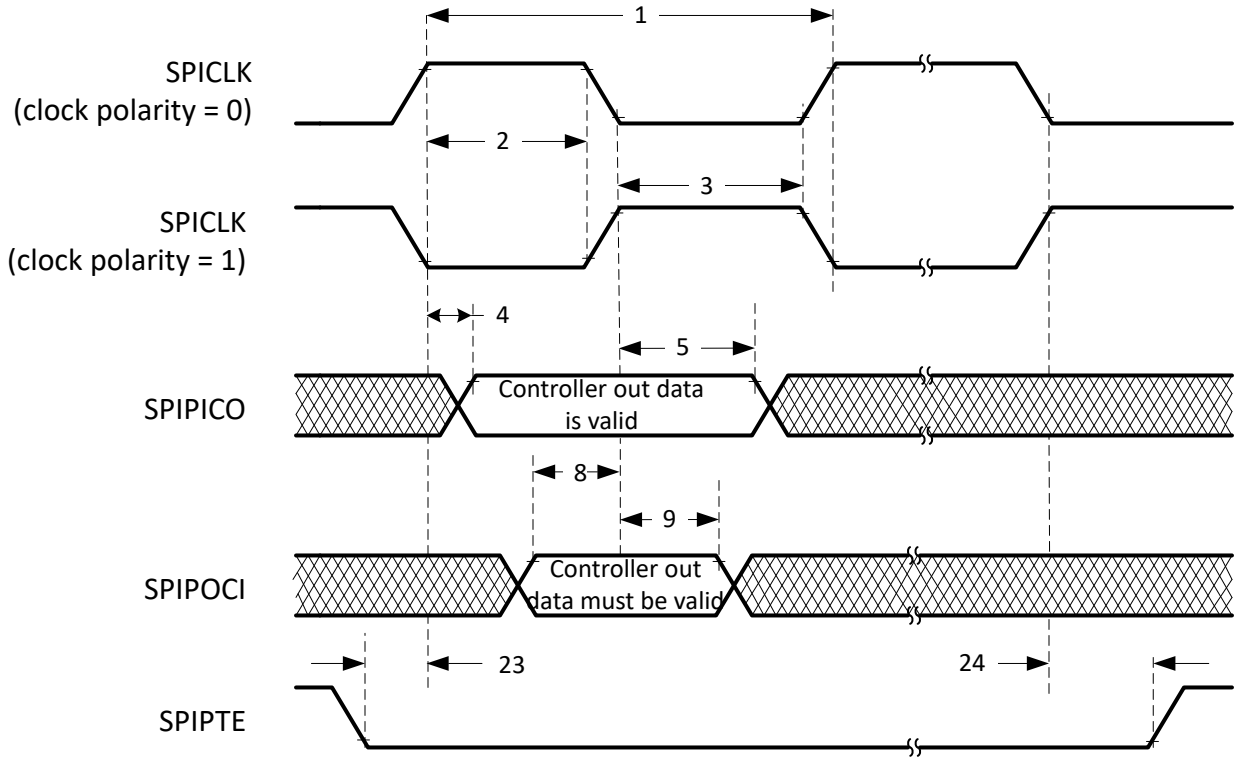

A. On the trailing end of the word, $\overline{\text{SPIPTE}}$ will go inactive except between back-to-back transmit words in both FIFO and non-FIFO modes.

Figure 6-70. SPI Controller Mode External Timing (Clock Phase = 0)

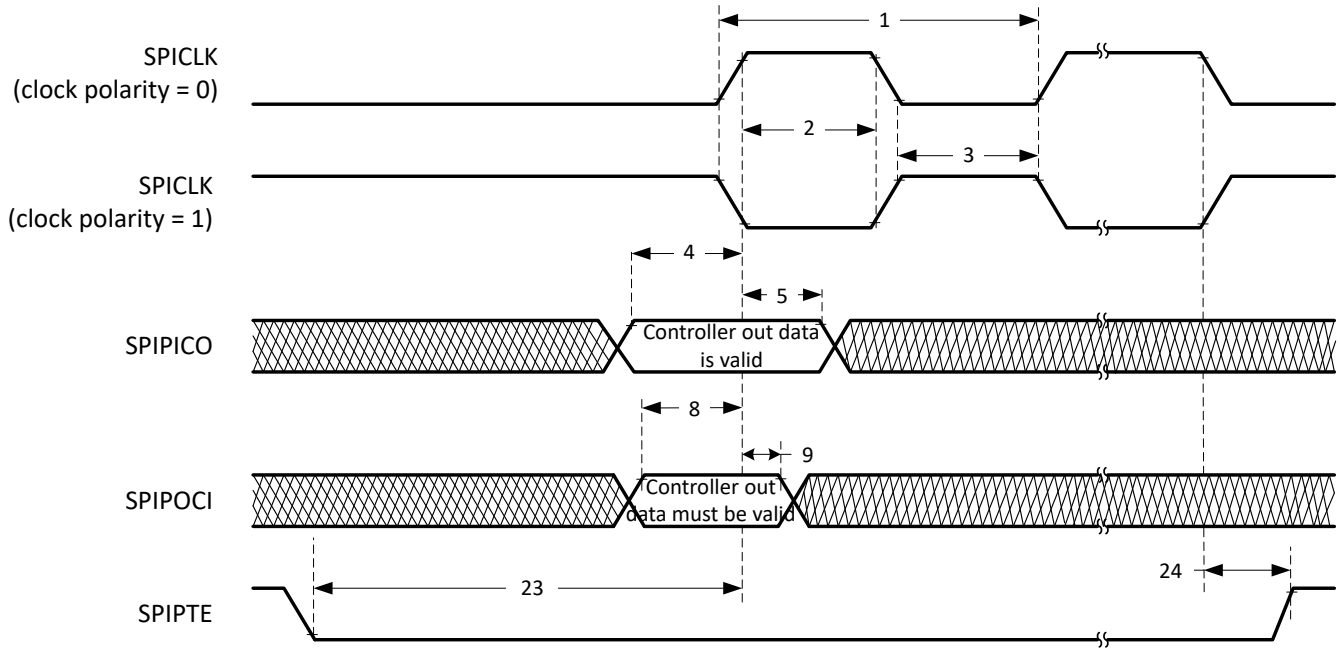

A. On the trailing end of the word, $\overline{\text{SPIPTE}}$ will go inactive except between back-to-back transmit words in both FIFO and non-FIFO modes.

Figure 6-71. SPI Controller Mode External Timing (Clock Phase = 1)

Copyright © 2026 Texas Instruments Incorporated

6.17.5.2 SPI Peripheral Mode Timings

The following sections contain the SPI Peripheral Mode timings.

6.17.5.2.1 SPI Peripheral Mode Timing Requirements

NO.			MIN	MAX	UNIT
12	$t_{c(SPC)S}$	Cycle time, SPICLK	$4t_{c(SYSCLK)}$		ns
13	$t_{w(SPC1)S}$	Pulse duration, SPICLK, first pulse	$2t_{c(SYSCLK)} - 1$		ns
14	$t_{w(SPC2)S}$	Pulse duration, SPICLK, second pulse	$2t_{c(SYSCLK)} - 1$		ns
19	$t_{su(PICO)S}$	Setup time, SPIPICO valid before SPICLK	$1.5t_{c(SYSCLK)}$		ns
20	$t_{h(PICO)S}$	Hold time, SPIPICO valid after SPICLK	$1.5t_{c(SYSCLK)}$		ns
25	$t_{su(STE)S}$	Setup time, $\overline{\text{SPIPTE}}$ valid before SPICLK (Clock Phase = 0)	$2t_{c(SYSCLK)} + 15$		ns
		Setup time, $\overline{\text{SPIPTE}}$ valid before SPICLK (Clock Phase = 1)	$2t_{c(SYSCLK)} + 15$		ns
26	$t_{h(STE)S}$	Hold time, $\overline{\text{SPIPTE}}$ invalid after SPICLK	$1.5t_{c(SYSCLK)}$		ns

6.17.5.2.2 SPI Peripheral Mode Switching Characteristics

over recommended operating conditions (unless otherwise noted)

NO.	PARAMETER(1)		MIN	MAX	UNIT
15	$t_{d(POCI)S}$	Delay time, SPICLK to SPIPOCI valid (non-high speed mode)		17	ns
15	$t_{d(POCI)S}$	Delay time, SPICLK to SPIPOCI valid (high-speed mode)		12.5	ns
15	$t_{d(POCI)S}$	Delay time, SPICLK to SPIPOCI valid (high-speed mode)(when used on pins muxed with PMBUS - GPIO2, 3, 9, or 32)		14	ns
15	$t_{d(POCI)S}$	Delay time, SPICLK to SPIPOCI valid (high-speed mode)(when used on pins muxed with USB - GPIO23 or 41)		16.7	ns
16	$t_{v(POCI)S}$	Valid time, SPIPOCI valid after SPICLK	0		ns

(1) 20-pF load on pin.

Copyright © 2026 Texas Instruments Incorporated

6.17.5.2.3 SPI Peripheral Mode Timing Diagrams

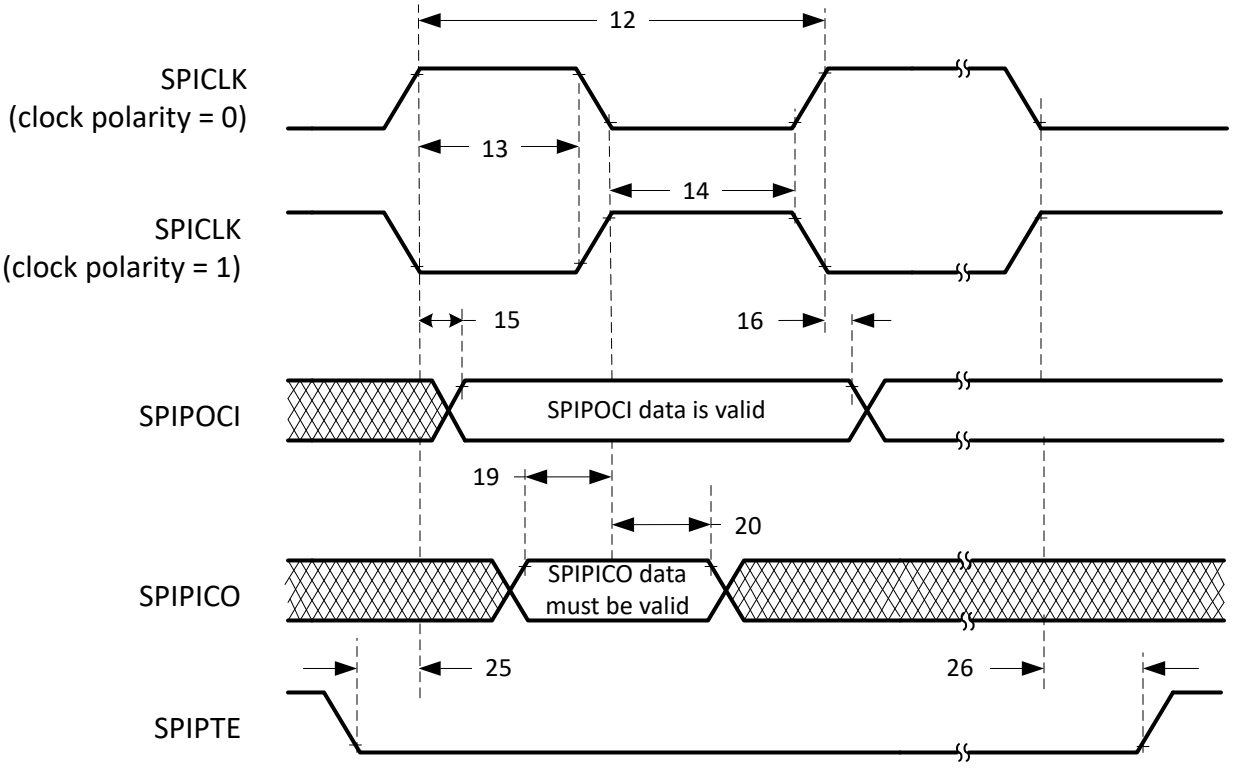

Figure 6-72. SPI Peripheral Mode External Timing (Clock Phase = 0)

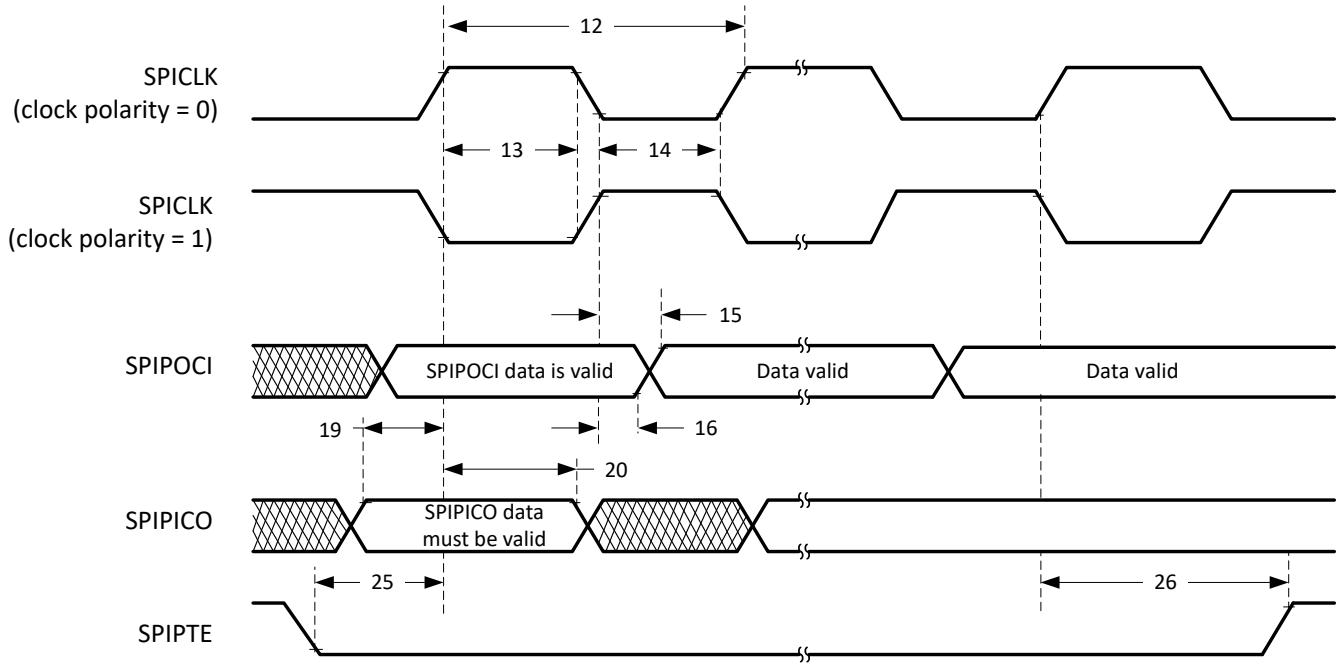

Figure 6-73. SPI Peripheral Mode External Timing (Clock Phase = 1)

Copyright © 2026 Texas Instruments Incorporated

6.17.6 Local Interconnect Network (LIN)

This device contains one Local Interconnect Network (LIN) module. The LIN module adheres to the LIN 2.1 standard as defined by the *LIN Specification Package Revision 2.1*. The LIN is a low-cost serial interface designed for applications where the CAN protocol may be too expensive to implement, such as small subnetworks for cabin comfort functions like interior lighting or window control in an automotive application.

The LIN standard is based on the SCI (UART) serial data link format. The communication concept is single-commander and multiple-responder with a message identification for multicast transmission between any network nodes.

The LIN module can be programmed to work either as an SCI or as a LIN as the core of the module is an SCI. The hardware features of the SCI are augmented to achieve LIN compatibility. The SCI module is a universal asynchronous receiver-transmitter (UART) that implements the standard non-return-to-zero format.

Though the registers are common for LIN and SCI, the register descriptions have notes to identify the register/bit usage in different modes. Because of this, code written for this module cannot be directly ported to the stand-alone SCI module and vice versa.

The LIN module has the following features:

- Compatibility with LIN 1.3, 2.0 and 2.1 protocols
- Configurable baud rate up to 20 kbps (as per LIN 2.1 protocol)
- Two external pins: LINRX and LINTX
- Multibuffered receive and transmit units
- Identification masks for message filtering
- Automatic commander header generation
  - Programmable synchronization break field
  - Synchronization field
  - Identifier field
- Responder automatic synchronization
  - Synchronization break detection
  - Optional baud rate update
  - Synchronization validation
- 2^{31} programmable transmission rates with 7 fractional bits
- Wakeup on LINRX dominant level from transceiver
- Automatic wake-up support
  - Wakeup signal generation
  - Expiration times on wakeup signals
- Automatic bus idle detection
- Error detection
  - Bit error
  - Bus error
  - No-response error
  - Checksum error
  - Synchronization field error
  - Parity error
- Capability to use direct memory access (DMA) for transmit and receive data
- Two interrupt lines with priority encoding for:
  - Receive
  - Transmit
  - ID, error, and status
- Support for LIN 2.0 checksum
- Enhanced synchronizer finite state machine (FSM) support for frame processing
- Enhanced handling of extended frames
- Enhanced baud rate generator

Copyright © 2026 Texas Instruments Incorporated

- Update wakeup/go to sleep

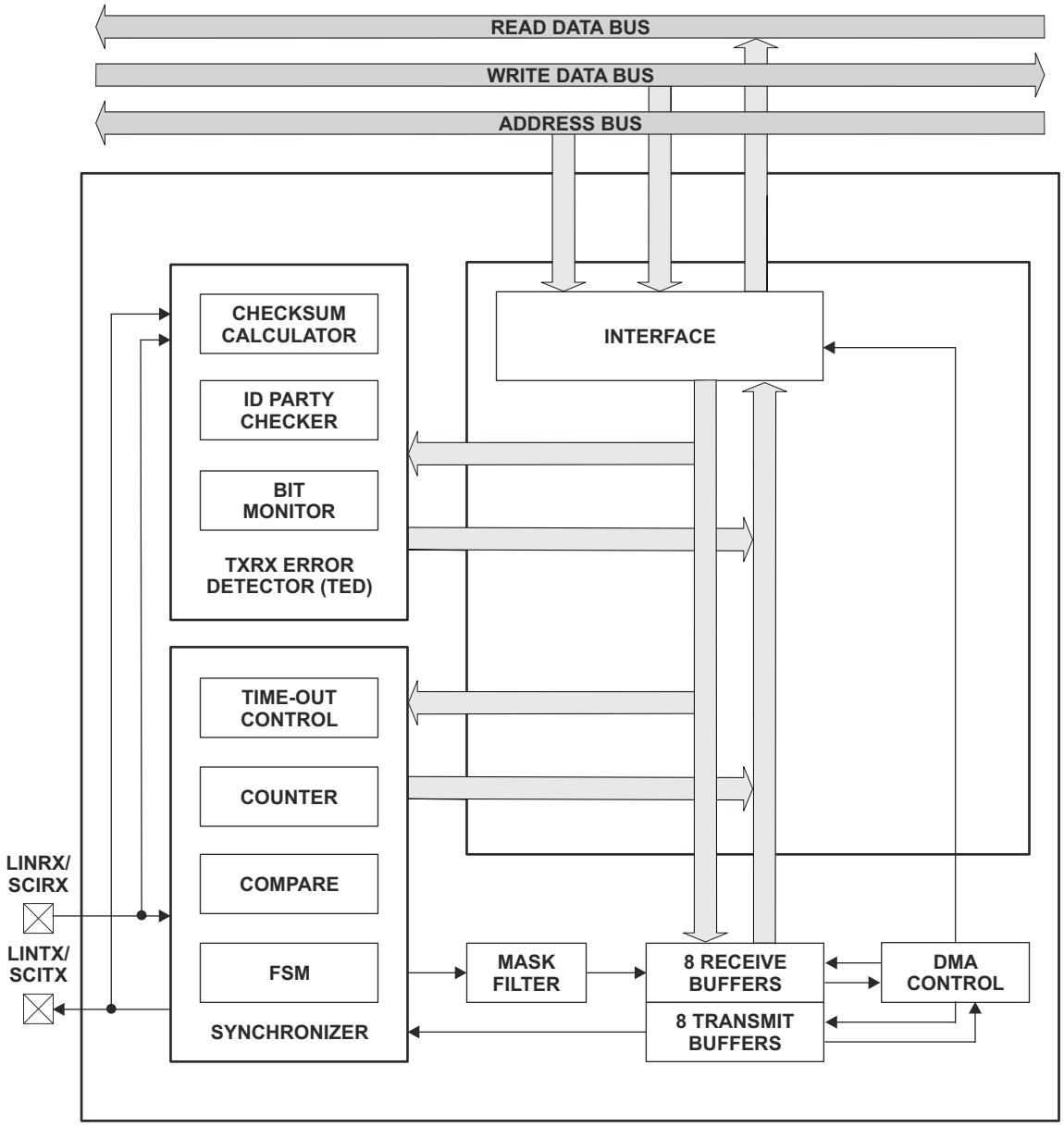

Figure 6-74. LIN Block Diagram

Copyright © 2026 Texas Instruments Incorporated

6.17.7 Fast Serial Interface (FSI)

The Fast Serial Interface (FSI) module is a serial communication peripheral capable of reliable and robust high-speed communications. The FSI is designed to ensure data robustness across many system conditions such as chip-to-chip as well as board-to-board across an isolation barrier. Payload integrity checks such as CRC, start- and end-of-frame patterns, and user-defined tags, are encoded before transmit and then verified after receipt without additional CPU interaction. Line breaks can be detected using periodic transmissions, all managed and monitored by hardware. The FSI is also tightly integrated with other control peripherals on the device. To ensure that the latest sensor data or control parameters are available, frames can be transmitted on every control loop period. An integrated skew-compensation block has been added on the receiver to handle skew that may occur between the clock and data signals due to a variety of factors, including trace-length mismatch and skews induced by an isolation chip. With embedded data robustness checks, data-link integrity checks, skew compensation, and integration with control peripherals, the FSI can enable high-speed, robust communication in any system. These and many other features of the FSI follow.

The FSI module includes the following features:

- Independent transmitter and receiver cores
- Source-synchronous transmission
- Dual data rate (DDR)
- One or two data lines
- Programmable data length
- Skew adjustment block to compensate for board and system delay mismatches
- Frame error detection
- Programmable frame tagging for message filtering
- Hardware ping to detect line breaks during communication (ping watchdog)
- Two interrupts per FSI core
- Externally triggered frame generation
- Hardware- or software-calculated CRC
- Embedded ECC computation module
- Register write protection
- DMA support
- SPI compatibility mode (limited features available)

Operating the FSI at maximum speed (60 MHz) at dual data rate (120Mbps) may require the integrated skew compensation block to be configured according to the specific operating conditions on a case-by-case basis. The *Fast Serial Interface (FSI) Skew Compensation* Application Note provides example software on how to configure and set up the integrated skew compensation block on the Fast Serial Interface.

The FSI consists of independent transmitter (FSITX) and receiver (FSIRX) cores. The FSITX and FSIRX cores are configured and operated independently. The features available on the FSITX and FSIRX are described in the *FSI Transmitter* section and the *FSI Receiver* section of the *TMS320F28P55x Real-Time Microcontrollers Technical Reference Manual*, respectively.

Copyright © 2026 Texas Instruments Incorporated

6.17.7.1 FSI Transmitter

The FSI transmitter module handles the framing of data, CRC generation, signal generation of TXCLK, TXD0, and TXD1, as well as interrupt generation. The operation of the transmitter core is controlled and configured through programmable control registers. The transmitter control registers let the CPU (or the CLA) program, control, and monitor the operation of the FSI transmitter. The transmit data buffer is accessible by the CPU, CLA, and the DMA.

The transmitter has the following features:

- Automated ping frame generation
- Externally triggered ping frames
- Externally triggered data frames
- Software-configurable frame lengths
- 16-word data buffer
- Data buffer underrun and overrun detection
- Hardware-generated CRC on data bits
- Software ECC calculation on select data
- DMA support
- CLA task triggering

Figure 6-75 shows the FSITX CPU interface. Figure 6-76 shows the high-level block diagram of the FSITX. Not all data paths and internal connections are shown. This diagram provides a high-level overview of the internal modules present in the FSITX.

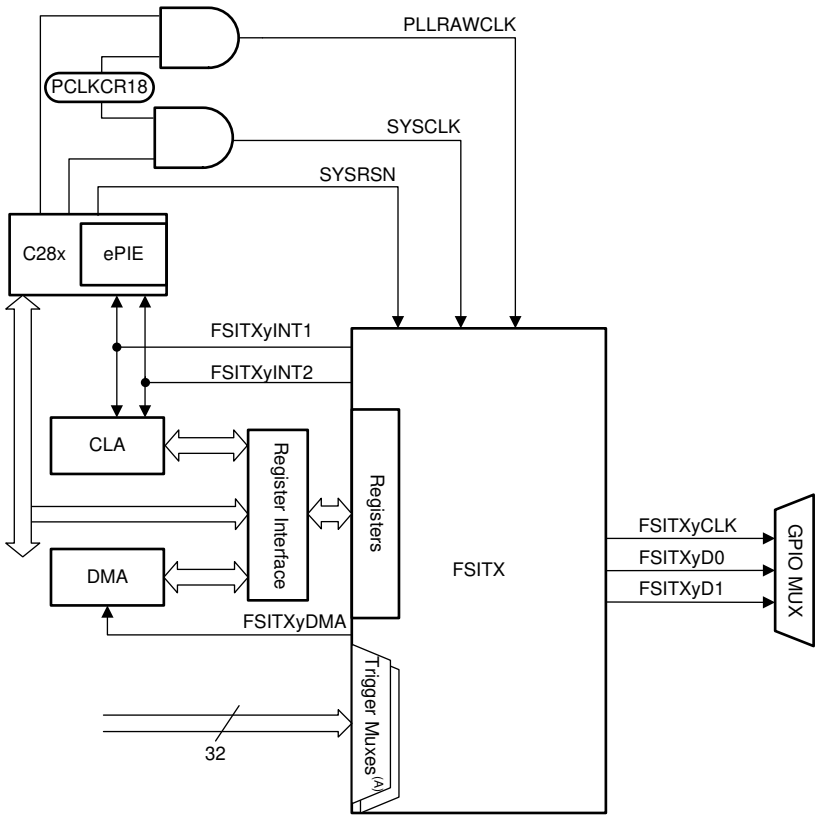

A. The signals connected to the trigger muxes are described in the *External Frame Trigger Mux* section of the Fast Serial Interface (FSI) chapter in the *TMS320F28P55x Real-Time Microcontrollers Technical Reference Manual*.

Figure 6-75. FSITX CPU Interface

Copyright © 2026 Texas Instruments Incorporated

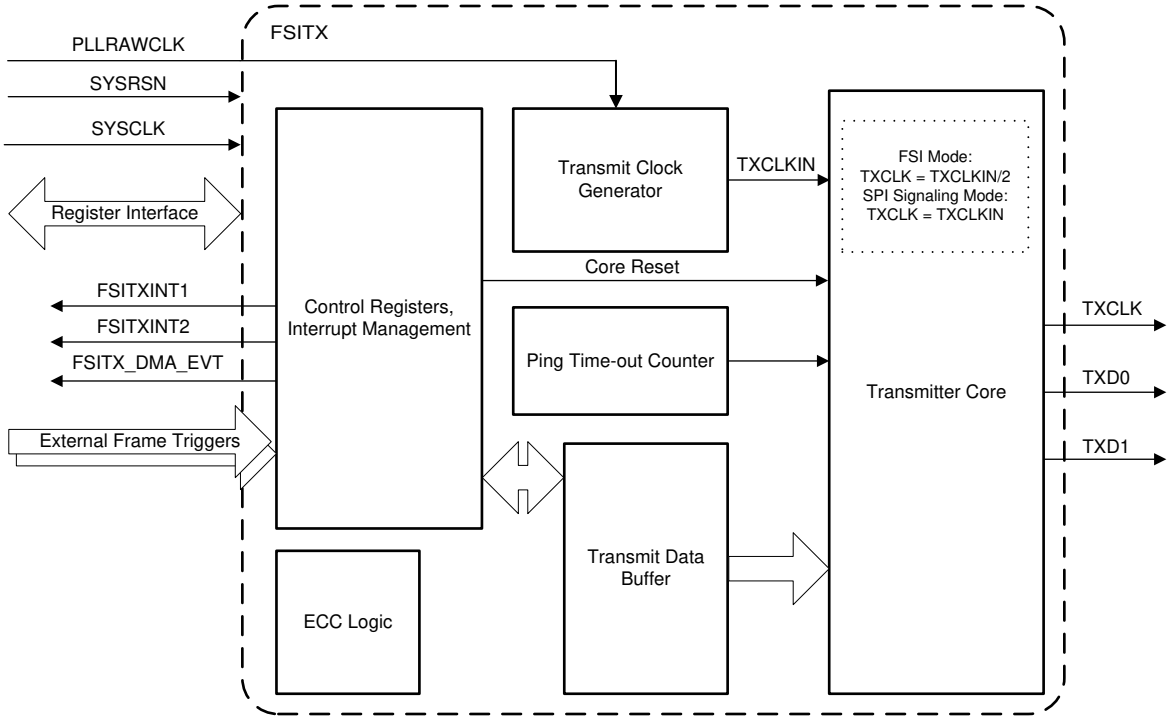

Figure 6-76. FSITX Block Diagram

6.17.7.1.1 FSITX Electrical Data and Timing

6.17.7.1.1.1 FSITX Switching Characteristics

over operating free-air temperature range (unless otherwise noted)

NO.	PARAMETER(1)		MIN	MAX	UNIT
1	$t_{c(TXCLK)}$	Cycle time, TXCLK		16.67	ns
1	$t_{c(TXCLK)}$	Cycle time, TXCLK(when any FSI signal is used on pins muxed with PMBUS - GPIO2, 3, 9, or 32)		26.67	ns
2	$t_{w(TXCLK)}$	Pulse width, TXCLK low or TXCLK high	$(0.5t_{c(TXCLK)}) – 1$	$(0.5t_{c(TXCLK)}) + 1$	ns
3	$t_{d(TXCLK–TXD)}$	Delay time, TXCLK rising or falling toTXD valid	$(0.25t_{c(TXCLK)}) – 2$	$(0.25t_{c(TXCLK)}) + 2$	ns
3	$t_{d(TXCLK–TXD)}$	Delay time, TXCLK rising or falling toTXD valid(when used on pin muxed with PMBUS - GPIO2, 3, 9, or 32)	$(0.25t_{c(TXCLK)}) – 2$	$(0.25t_{c(TXCLK)}) + 2.5$	ns
4	$t_{d(TXCLK)}$	TXCLK delay compensation at TX_DLYLINE_CTRL[TXCLK_DLY]=31	9.4	30	ns
5	$t_{d(TXD0)}$	TXD0 delay compensation at TX_DLYLINE_CTRL[TXD0_DLY]=31	9.4	30	ns
6	$t_{d(TXD1)}$	TXD1 delay compensation at TX_DLYLINE_CTRL[TXD1_DLY]=31	9.4	30	ns
7	$t_{d(DELAY_ELEMENT)}$	Incremental delay of each delay line element for TXCLK, TXD0, and TXD1	0.29	1	ns

(1) 10-pF load on pin.

Copyright © 2026 Texas Instruments Incorporated

6.17.7.1.1.2 FSITX Timings

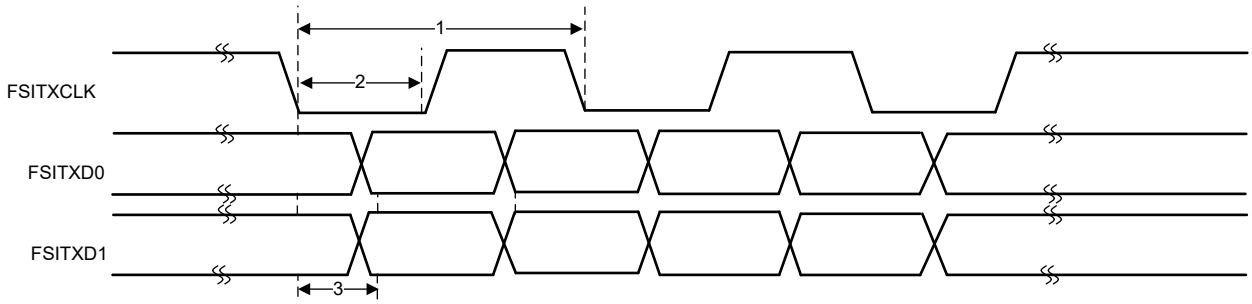

Figure 6-77. FSITX Timings

6.17.7.2 FSI Receiver

The receiver module interfaces to the FSI clock (RXCLK), and data lines (RXD0 and RXD1) after they pass through an optional programmable delay line. The receiver core handles the data framing, CRC computation, and frame-related error checking. The receiver bit clock and state machine are run by the RXCLK input, which is asynchronous to the device system clock.

The receiver control registers let the CPU program (or the CLA), control, and monitor the operation of the FSIRX. The receive data buffer is accessible by the CPU, CLA, and the DMA.

The receiver core has the following features:

- 16-word data buffer
- Multiple supported frame types
- Ping frame watchdog
- Frame watchdog
- CRC calculation and comparison in hardware
- ECC detection
- Programmable delay line control on incoming signals
- DMA support
- SPI compatibility mode
- CLA task triggering

Figure 6-78 shows the FSIRX CPU interface. Figure 6-79 provides a high-level overview of the internal modules present in the FSIRX. Not all data paths and internal connections are shown.

Copyright © 2026 Texas Instruments Incorporated

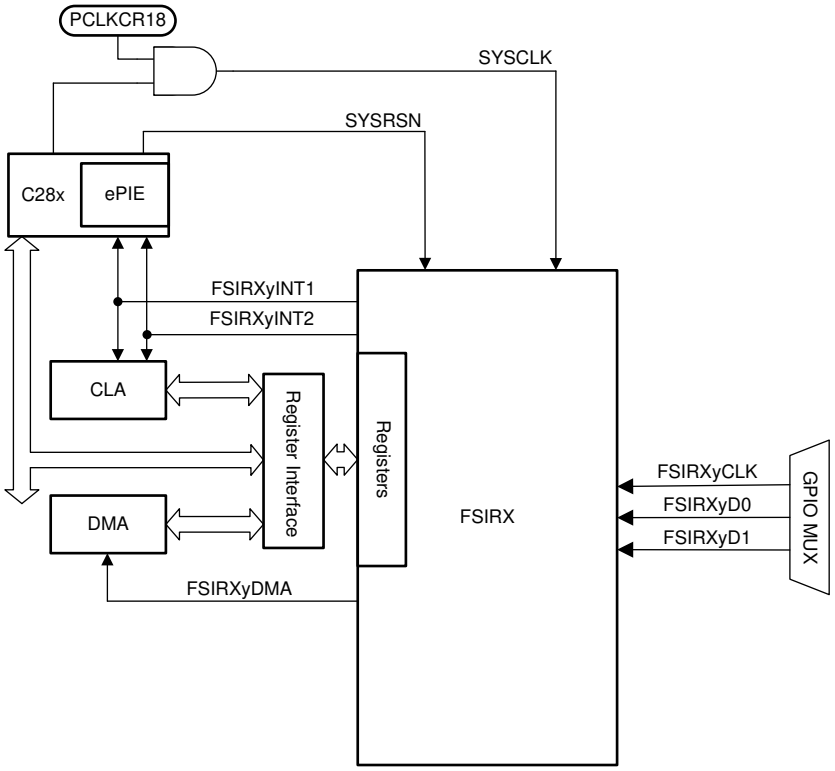

Figure 6-78. FSIRX CPU Interface

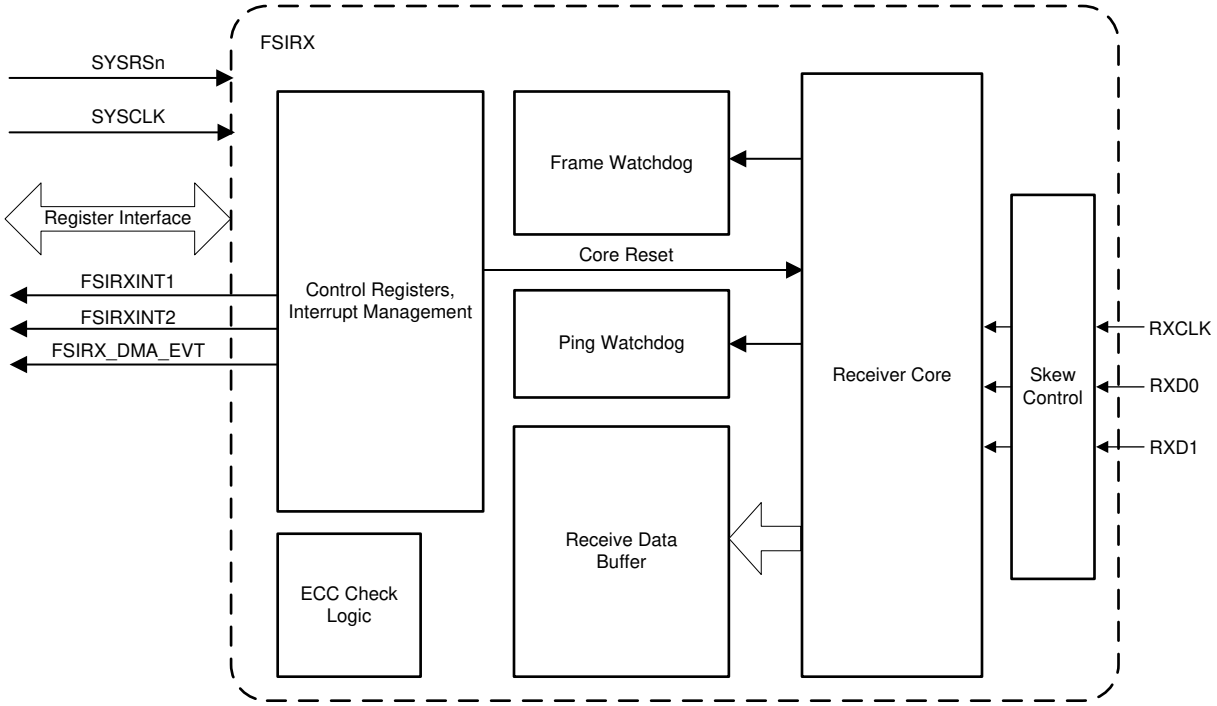

Figure 6-79. FSIRX Block Diagram

6.17.7.2.1 FSIRX Electrical Data and Timing

6.17.7.2.1.1 FSIRX Timing Requirements

NO.			MIN	MAX	UNIT
1	$t_{c(RXCLK)}$	Cycle time, RXCLK		16.67	ns
1	$t_{c(RXCLK)}$	Cycle time, RXCLK(when any FSI signal is used on pins muxed with PMBUS - GPIO2, 3, 9, or 32)		26.67	ns
2	$t_{w(RXCLK)}$	Pulse width, RXCLK low or RXCLK high.	$0.35t_{c(RXCLK)}$	$0.65t_{c(RXCLK)}$	ns
3	$t_{su(RXCLK–RXD)}$	Setup time with respect to RXCLK, applies to both edges of the clock	1.7		ns
3	$t_{su(RXCLK–RXD)}$	Setup time with respect to RXCLK, applies to both edges of the clock(when used on pin muxed with PMBUS - GPIO2, 3, 9, or 32)	2.6		ns
4	$t_{h(RXCLK–RXD)}$	Hold time with respect to RXCLK, applies to both edges of the clock	2		ns

6.17.7.2.1.2 FSIRX Switching Characteristics

NO.	PARAMETER(1)		MIN	MAX	UNIT
1	$t_{d(RXCLK)}$	RXCLK delay compensation at RX_DLYLINE_CTRL[RXCLK_DLY]=31	9.7	30	ns
2	$t_{d(RXD0)}$	RXD0 delay compensation at RX_DLYLINE_CTRL[RXD0_DLY]=31	9.7	30	ns
3	$t_{d(RXD1)}$	RXD1 delay compensation at RX_DLYLINE_CTRL[RXD1_DLY]=31	9.7	30	ns
4	$t_{d(DELAY_ELEMENT)}$	Incremental delay of each delay line element for RXCLK, RXD0, and RXD1	0.29	1	ns
TDM1	$t_{skew(TDM_CLK-TDM_Dx)}$	Delay skew introduced between RXCLK-TDM_CLK delay and RXDx-TDM_Dx delays	-3	3	ns
TDM1	$t_{d(RXCLK-TDM_CLK)}$	Delay time, RXCLK input to TDM_CLK output	2	14.5	ns
TDM2	$t_{d(RXD0-TXD0)}$	Delay time, RXD0 input to TXD0 output	2	14.5	ns
TDM3	$t_{d(RXD1-TXD1)}$	Delay time, RXD1 input to TXD1 output	2	14.5	ns

(1) 10-pF load on pin.

6.17.7.2.1.3 FSIRX Timings

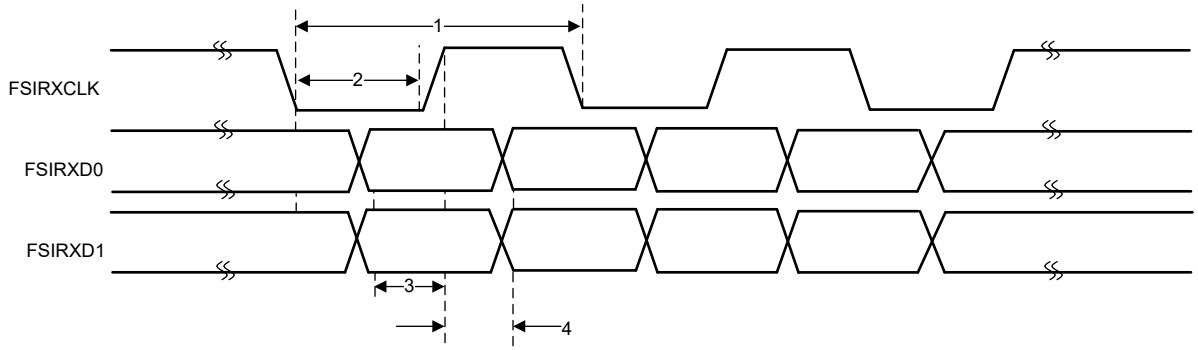

Figure 6-80. FSIRX Timings

Copyright © 2026 Texas Instruments Incorporated

6.17.7.3 FSI SPI Compatibility Mode

The FSI supports a SPI compatibility mode to enable communication with programmable SPI devices. In this mode, the FSI transmits its data in the same manner as a SPI in a single clock configuration mode. While the FSI is able to physically interface with a SPI in this mode, the external device must be able to encode and decode an FSI frame to communicate successfully. This is because the FSI transmits all SPI frame phases with the exception of the preamble and postamble. The FSI provides the same data validation and frame checking as if it was in standard FSI mode, allowing for more robust communication without consuming CPU cycles. The external SPI is required to send all relevant information and can access standard FSI features such as the ping frame watchdog on the FSIRX, frame tagging, or custom CRC values. The list of features of SPI compatibility mode follows:

- Data will transmit on rising edge and receive on falling edge of the clock.
- Only 16-bit word size is supported.
- TXD1 will be driven like an active-low chip-select signal. The signal will be low for the duration of the full frame transmission.
- No receiver chip-select input is required. RXD1 is not used. Data is shifted into the receiver on every active clock edge.
- No preamble or postamble clocks will be transmitted. All signals return to the idle state after the frame phase is finished.
- It is not possible to transmit in the SPI peripheral configuration because the FSI TXCLK cannot take an external clock source.

6.17.7.3.1 FSITX SPI Signaling Mode Electrical Data and Timing

Special timings are not required for the FSIRX in SPI signaling mode. FSIRX timings listed in the *FSIRX Timing Requirements* table are applicable in SPI compatibility mode. Setup and Hold times are only valid on the falling edge of FSIRXCLK because this is the active edge in SPI signaling mode.

6.17.7.3.1.1 FSITX SPI Signaling Mode Switching Characteristics

over operating free-air temperature range (unless otherwise noted)

NO.	PARAMETER(1)		MIN	MAX	UNIT
1	$t_{c(TXCLK)}$	Cycle time, TXCLK		16.67	ns
1	$t_{c(TXCLK)}$	Cycle time, TXCLK(when any FSI signal is used on pins muxed with PMBUS - GPIO2, 3, 9, or 32)		26.67	ns
2	$t_{w(TXCLK)}$	Pulse width, TXCLK low or TXCLK high	$(0.5t_{c(TXCLK)}) - 1$	$(0.5t_{c(TXCLK)}) + 1$	ns
3	$t_{d(TXCLKH–TXD0)}$	Delay time, TXD0 valid after TXCLK high		3	ns
4	$t_{d(TXD1-TXCLK)}$	Delay time, TXCLK high after TXD1 low	$t_{w(TXCLK)} - 3$		ns
5	$t_{d(TXCLK-TXD1)}$	Delay time, TXD1 high after TXCLK low	$t_{w(TXCLK)}$		ns

(1) 10-pF load on pin

6.17.7.3.1.2 FSITX SPI Signaling Mode Timings

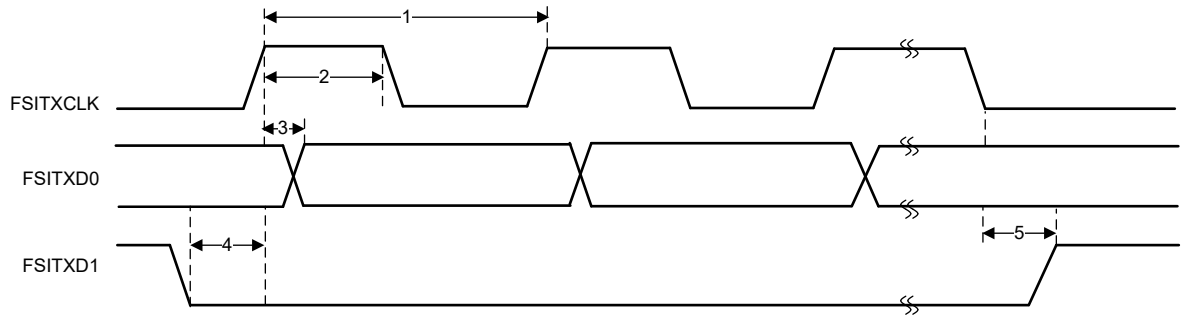

Figure 6-81. FSITX SPI Signaling Mode Timings

6.17.8 Universal Serial Bus (USB)

The USB controller operates as a full-speed or low-speed function controller during point-to-point communications with USB host or device functions.

The USB module has the following features:

- USB 2.0 full-speed and low-speed operation
- Integrated PHY
- Three transfer types: control, interrupt, and bulk
- 32 endpoints
  - One dedicated control IN endpoint and one dedicated control OUT endpoint
  - 15 configurable IN endpoints and 15 configurable OUT endpoints
- 4KB of dedicated endpoint memory

Figure 6-82 shows the USB block diagram.

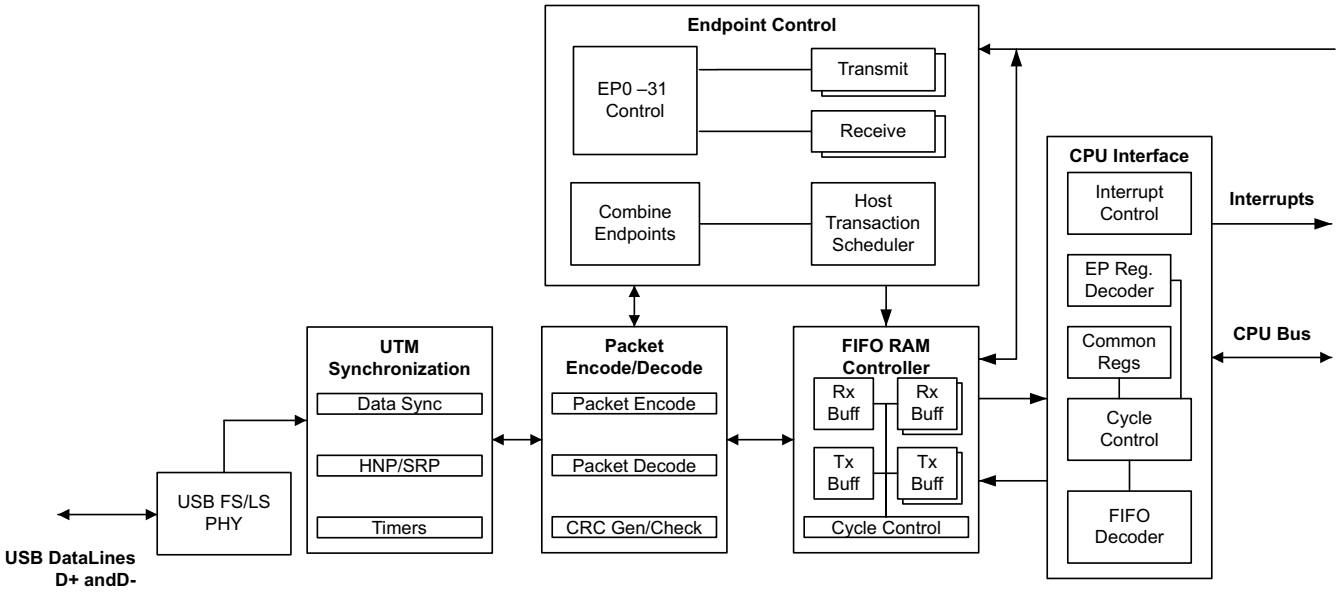

Figure 6-82. USB Block Diagram

Note

The accuracy of the on-chip zero-pin oscillator (see the *INTOSC Characteristics* section) will not meet the accuracy requirements of the USB protocol. An external clock source must be used for applications using USB. For applications using the USB boot mode, see the *Boot ROM and Peripheral Booting* section for clock frequency requirements.

Copyright © 2026 Texas Instruments Incorporated

6.17.8.1 USB Electrical Data and Timing

6.17.8.1.1 USB Input Ports DP and DM Timing Requirements

		MIN	MAX	UNIT
V(CM)	Differential input common mode range	0.8	2.5	V
Z(IN)	Input impedance	300		kΩ
VCRS	Crossover voltage	1.3	2.0	V
V_{IL}	Static SE input logic-low level	0.8		V
V_{IH}	Static SE input logic-high level		2.0	V
VDI	Differential input voltage		0.2	V

6.17.8.1.2 USB Output Ports DP and DM Switching Characteristics

over recommended operating conditions (unless otherwise noted)

PARAMETER		TEST CONDITIONS	MIN	MAX	UNIT
V_{OH}	D+, D– single-ended	USB 2.0 load conditions	2.8	3.6	V
V_{OL}	D+, D– single-ended	USB 2.0 load conditions	0	0.3	V
Z(DRV)	D+, D– impedance		28	44	Ω
t_r	Rise time	Full speed, differential, C_L = 50 pF, 10%/90%, Rpu on D+	4	20	ns
t_f	Fall time	Full speed, differential, C_L = 50 pF, 10%/90%, Rpu on D+	4	20	ns

Copyright © 2026 Texas Instruments Incorporated

7 Detailed Description

7.1 Overview

The TMS320F28P55x (F28P55x) is a member of the C2000™ real-time microcontroller family of scalable, ultra-low latency devices designed for efficiency in power electronics, including but not limited to: high power density, high switching frequencies, and supporting the use of GaN and SiC technologies.

These include such applications as:

- Industrial motor drives
- Motor control
  - Traction inverter motor control
  - HVAC motor control
  - Mobile robot motor control
- Solar inverters
  - Central inverter
  - Micro inverter
  - String inverter
- Digital power
- Electrical vehicles and transportation
- EV charging infrastructure

The real-time control subsystem is based on TI's 32-bit C28x DSP core, which provides 150 MIPS of signal-processing performance in each core for floating- or fixed-point code running from either on-chip flash or SRAM. The C28x CPU is further boosted by the Trigonometric Math Unit (TMU) and VCRC (Cyclical Redundancy Check) extended instruction sets, speeding up common algorithms key to real-time control systems. Extended instruction sets enable IEEE double-precision 32-bit floating-point math. Finally, the Control Law Accelerator (CLA) enables an additional 150 MIPS per core of independent processing ability. Machine learning is supported with the addition of the TinyEngine™ NPU (Neural-network Processing Unit), capable of 600 MOPS on 8-bit weight/8-bit data across multiple NN layers.

To allow fast context switching from existing to new firmware, hardware enhancements for Live Firmware Update (LFU) have been added to F28P55x.

High-performance analog blocks are tightly integrated with the processing and control units to provide optimal real-time signal chain performance. The Analog-to-Digital Converter (ADC) has been enhanced with up to 39 analog channels, 22 of which have general-purpose input/output (GPIO) capability. Implementation of oversampling is greatly simplified with hardware improvement. For safety-critical ADC conversions, a hardware redundancy checker has been added. The hardware redundancy checker provides the ability to compare ADC conversion results from multiple ADC modules for consistency without additional CPU cycles. Three Programmable Gain Amplifiers (PGAs) are present, supporting unity gain as well as up to 64x of non-inverting gain. Twenty-four frequency-independent PWMs, 16 with high-resolution capability, enable control of multiple power stages, from 3-phase inverters to advanced multilevel power topologies.

The inclusion of the Configurable Logic Block (CLB) allows the user to add custom logic and potentially integrate FPGA-like functions into the C2000 real-time MCU.

Industry-standard protocols like CAN FD and USB 2.0 are available on this device. The Fast Serial Interface (FSI) enables up to 200 Mbps of robust communications across an isolation boundary. Enhancements have been made to the PMBUS module to support Fast Plus mode.

Want to learn more about features that make C2000 MCUs the right choice for your real-time control system? Check out *The Essential Guide for Developing With C2000™ Real-Time Microcontrollers* and visit the C2000™ real-time control MCUs page.

Copyright © 2026 Texas Instruments Incorporated

7.2 Functional Block Diagram

Figure 7-1 shows the CPU system and associated peripherals.

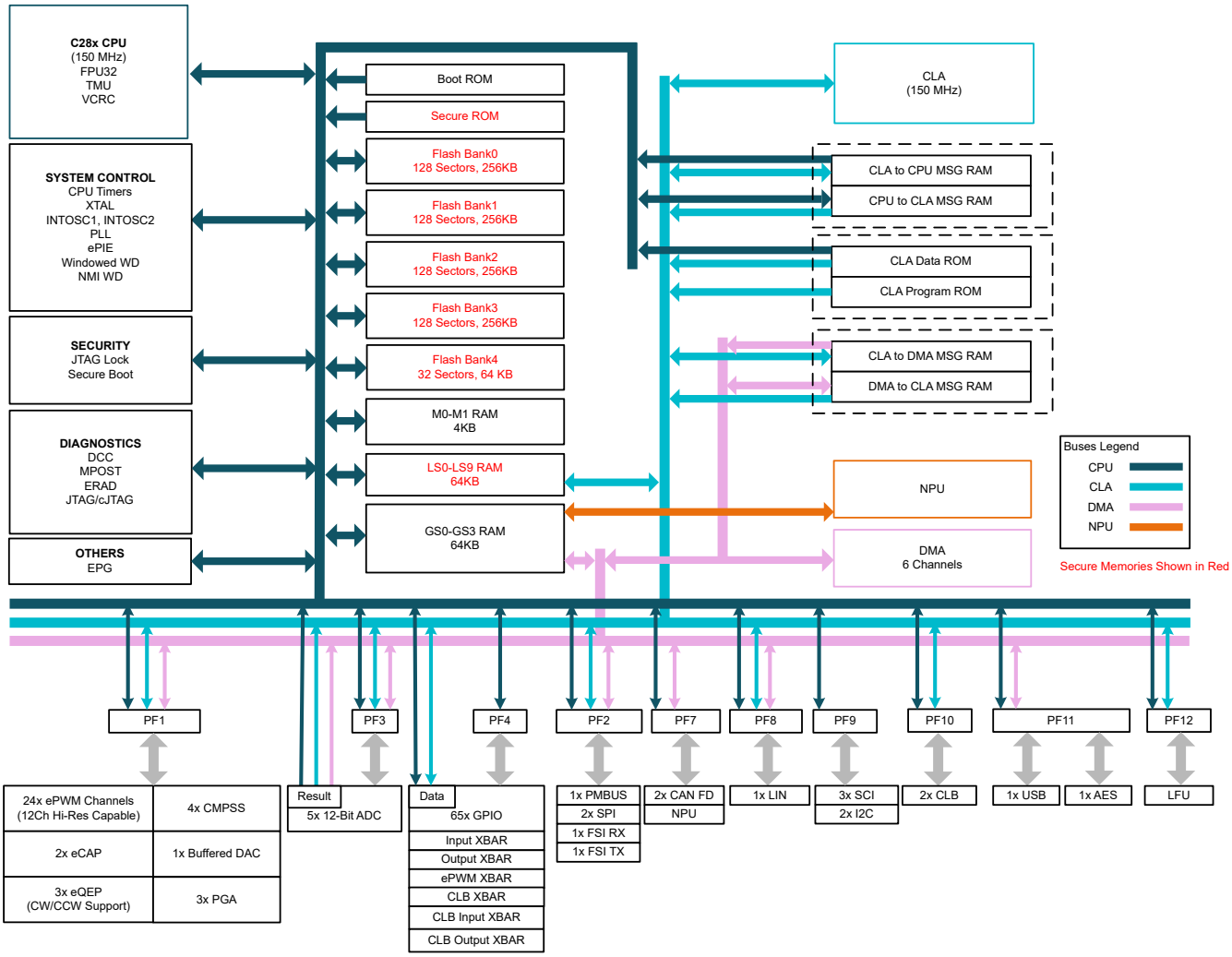

A. The internal DAC from one of the CMPSS modules can be configured as an output DAC.
B. The LIN module can also be used as a SCI module.

Figure 7-1. Functional Block Diagram

7.3 Memory

7.3.1 Memory Map

The *Memory Map* table describes the memory map. See the *Memory Controller Module* section of the System Control chapter in the *TMS320F28P55x Real-Time Microcontrollers Technical Reference Manual*.

Table 7-1. Memory Map

MEMORY	SIZE (x16)	START ADDRESS	END ADDRESS	CPU1.DMA ACCESS	CPU1.CLA1 DATA ACCESS	CPU1.CLA1 PROGRAM ACCESS	ECC/ Parity	SECURITY	PART NUMBER
M0 RAM	1024	0x0000_0000	0x0000_03FF	-	-	-	ECC	-	-
M1 RAM	1024	0x0000_0400	0x0000_07FF	-	-	-	ECC	-	-
PIE Vector Table	512	0x0000_0D00	0x0000_0EFF	-	-	-	Parity	-	-
CLAtoCPU MSG RAM	128	0x0000_1480	0x0000_14FF	-	YES	-	Parity	-	-
CPUtoCLA MSG RAM	128	0x0000_1500	0x0000_157F	-	YES	-	Parity	-	-
CLAtoDMA MSG RAM	128	0x0000_1680	0x0000_16FF	YES	YES	-	Parity	-	-
DMAtoCLA MSG RAM	128	0x0000_1700	0x0000_177F	YES	YES	-	Parity	-	-
LS8 RAM - CLA Prog	8192	0x0000_4000	0x0000_5FFF	-	-	YES	Parity	YES	F28P559SJ9-Q1, F28P550SJ9, F28P559SG9-Q1, F28P550SG9, F28P550SG8, F28P559SG8-Q1, F28P559SJ6-Q1, F28P550SJ6
LS9 RAM - CLA Prog	8192	0x0000_6000	0x0000_7FFF	-	-	YES	Parity	YES	F28P559SJ9-Q1, F28P550SJ9, F28P559SG9-Q1, F28P550SG9, F28P550SG8, F28P559SG8-Q1, F28P559SJ6-Q1, F28P550SJ6
LS0 RAM	2048	0x0000_8000	0x0000_87FF	-	YES	YES	Parity	YES	-
LS1 RAM	2048	0x0000_8800	0x0000_8FFF	-	YES	YES	Parity	YES	-
LS2 RAM	2048	0x0000_9000	0x0000_97FF	-	YES	YES	Parity	YES	-
LS3 RAM	2048	0x0000_9800	0x0000_9FFF	-	YES	YES	Parity	YES	-
LS4 RAM	2048	0x0000_A000	0x0000_A7FF	-	YES	YES	Parity	YES	-
LS5 RAM	2048	0x0000_A800	0x0000_AFFF	-	YES	YES	Parity	YES	-
LS6 RAM	2048	0x0000_B000	0x0000_B7FF	-	YES	YES	Parity	YES	-
LS7 RAM	2048	0x0000_B800	0x0000_BFFF	-	YES	YES	Parity	YES	-
GS0 RAM	8192	0x0000_C000	0x0000_DFFF	YES	-	-	Parity	-	-
GS1 RAM	8192	0x0000_E000	0x0000_FFFF	YES	-	-	Parity	-	-
CLA Data ROM	4096	0x0000_F000	0x0000_FFFF	-	YES	-	Parity	-	F28P559SJ9-Q1, F28P550SJ9, F28P559SG9-Q1, F28P550SG9, F28P550SG8, F28P559SG8-Q1, F28P559SJ6-Q1, F28P550SJ6
GS2 RAM	8192	0x0001_0000	0x0001_1FFF	YES	-	-	Parity	-	F28P559SJ9-Q1, F28P550SJ9, F28P559SJ2-Q1, F28P559SJ6-Q1, F28P550SJ6

Copyright © 2026 Texas Instruments Incorporated

Table 7-1. Memory Map (continued)

MEMORY	SIZE (x16)	START ADDRESS	END ADDRESS	CPU1.DMA ACCESS	CPU1.CLA1 DATA ACCESS	CPU1.CLA1 PROGRAM ACCESS	ECC/ Parity	SECURITY	PART NUMBER
GS3 RAM	8192	0x0001_2000	0x0001_3FFF	YES	-	-	Parity	-	F28P559SJ9-Q1, F28P550SJ9, F28P559SJ2-Q1, F28P559SJ6-Q1, F28P550SJ6
LS8 RAM - CPU	8192	0x0001_4000	0x0001_5FFF	-	-	-	Parity	YES	F28P559SJ9-Q1, F28P550SJ9, F28P559SG9-Q1, F28P550SG9, F28P559SG8-Q1, F28P559SG2-Q1, F28P559SJ2-Q1, F28P550SG8, F28P559SJ6-Q1, F28P550SJ6
LS9 RAM - CPU	8192	0x0001_6000	0x0001_7FFF	-	-	-	Parity	YES	F28P559SJ9-Q1, F28P550SJ9, F28P559SG9-Q1, F28P550SG9, F28P559SG8-Q1, F28P559SG2-Q1, F28P559SJ2-Q1, F28P550SG8, F28P559SJ6-Q1, F28P550SJ6
USB RAM	2048	0x0004_1000	0x0004_17FF	YES	-	-	-	-	F28P559SJ9-Q1, F28P550SJ9, F28P559SG9-Q1, F28P550SG9, F28P559SJ6-Q1, F28P550SJ6
MCANA Message RAM (CPU Access mode)	2048	0x0005_8000	0x0005_87FF	YES	-	-	ECC	-	-
MCANA Message RAM (Peripheral mode)	4096	0x0005_8000	0x0005_8FFF	YES	-	-	ECC	-	-
MCANB Message RAM (Peripheral mode)	4096	0x0005_A000	0x0005_AFFF	YES	-	-	ECC	-	-
MCANB Message RAM (CPU Access mode)	2048	0x0005_A000	0x0005_A7FF	YES	-	-	ECC	-	-
TI OTP Bank 0	1536	0x0007_2000	0x0007_25FF	-	-	-	ECC	-	-
UID_REGS	16	0x0007_2168	0x0007_2177	-	-	-	ECC	-	-
TI OTP Bank 1	1536	0x0007_3000	0x0007_35FF	-	-	-	ECC	-	F28P559SJ9-Q1, F28P550SJ9, F28P559SJ2-Q1, F28P559SJ6-Q1, F28P550SJ6
TI OTP Bank 2	1536	0x0007_4000	0x0007_45FF	-	-	-	ECC	-	-
TI OTP Bank 3	1536	0x0007_5000	0x0007_55FF	-	-	-	ECC	-	F28P559SJ9-Q1, F28P550SJ9, F28P559SJ2-Q1, F28P559SJ6-Q1, F28P550SJ6
TI OTP Bank 4	1536	0x0007_6000	0x0007_65FF	-	-	-	ECC	-	F28P559SJ9-Q1, F28P550SJ9, F28P559SJ2-Q1, F28P559SJ6-Q1, F28P550SJ6
DCSM BANK0 Z1 OTP	512	0x0007_8000	0x0007_81FF	-	-	-	ECC	YES	-
DCSM BANK0 Z2 OTP	512	0x0007_8200	0x0007_83FF	-	-	-	ECC	YES	-

Copyright © 2026 Texas Instruments Incorporated

Table 7-1. Memory Map (continued)

MEMORY	SIZE (x16)	START ADDRESS	END ADDRESS	CPU1.DMA ACCESS	CPU1.CLA1 DATA ACCESS	CPU1.CLA1 PROGRAM ACCESS	ECC/ Parity	SECURITY	PART NUMBER
User OTP Bank 1	1024	0x0007_8800	0x0007_8BFF	-	-	-	ECC	-	F28P559SJ9-Q1, F28P550SJ9, F28P559SJ2-Q1, F28P559SJ6-Q1, F28P550SJ6
User OTP Bank 2	1024	0x0007_9000	0x0007_93FF	-	-	-	ECC	-	-
User OTP Bank 3	1024	0x0007_9800	0x0007_9BFF	-	-	-	ECC	-	F28P559SJ9-Q1, F28P550SJ9, F28P559SJ2-Q1, F28P559SJ6-Q1, F28P550SJ6
User OTP Bank 4	1024	0x0007_A000	0x0007_A3FF	-	-	-	ECC	-	F28P559SJ9-Q1, F28P550SJ9, F28P559SJ2-Q1, F28P559SJ6-Q1, F28P550SJ6
Flash Bank 0	131072	0x0008_0000	0x0009_FFFF	-	-	-	ECC	YES	-
Flash Bank 1	131072	0x000A_0000	0x000B_FFFF	-	-	-	ECC	YES	F28P559SJ9-Q1, F28P550SJ9, F28P559SJ2-Q1, F28P559SJ6-Q1, F28P550SJ6
Flash Bank 2	131072	0x000C_0000	0x000D_FFFF	-	-	-	ECC	YES	-
Flash Bank 3	131072	0x000E_0000	0x000F_FFFF	-	-	-	ECC	YES	F28P559SJ9-Q1, F28P550SJ9, F28P559SJ2-Q1, F28P559SJ6-Q1, F28P550SJ6
Flash Bank 4	32768	0x0010_0000	0x0010_7FFF	-	-	-	ECC	YES	F28P559SJ9-Q1, F28P550SJ9, F28P559SJ6-Q1, F28P550SJ6, F28P559SG9-Q1, F28P550SG9
Z1-SecureBoot Functions	3072	0x003F_4000	0x003F_4BFF	-	-	-	Parity	YES	-
Z1-Safe Functions	1536	0x003F_4C00	0x003F_51FF	-	-	-	Parity	YES	-
Z2-Safe Functions	1536	0x003F_5600	0x003F_5BFF	-	-	-	Parity	YES	-
CPU STL	9216	0x003F_5C00	0x003F_7FFF	-	-	-	Parity	-	-
Boot ROM	32768	0x003F_8000	0x003F_FFFF	-	-	-	Parity	-	-
PIE Vector Table Swap	512	0x0100_0900	0x0100_0AFF	-	-	-	Parity	-	-
CLA Data ROM (CPU Mapped)	4096	0x0100_1000	0x0100_1FFF	-	-	-	Parity	-	F28P559SJ9-Q1, F28P550SJ9, F28P559SG9-Q1, F28P550SG9, F28P550SG8, F28P559SG8-Q1, F28P559SJ6-Q1, F28P550SJ6
TI OTP Bank 0 ECC	192	0x0107_0400	0x0107_04BF	-	-	-	-	-	-
TI OTP Bank 1 ECC	192	0x0107_0600	0x0107_06BF	-	-	-	-	-	F28P559SJ9-Q1, F28P550SJ9, F28P559SJ2-Q1, F28P559SJ6-Q1, F28P550SJ6
TI OTP Bank 2 ECC	192	0x0107_0800	0x0107_08BF	-	-	-	-	-	-

Copyright © 2026 Texas Instruments Incorporated

Table 7-1. Memory Map (continued)

MEMORY	SIZE (x16)	START ADDRESS	END ADDRESS	CPU1.DMA ACCESS	CPU1.CLA1 DATA ACCESS	CPU1.CLA1 PROGRAM ACCESS	ECC/ Parity	SECURITY	PART NUMBER
TI OTP Bank 3 ECC	192	0x0107_0A00	0x0107_0ABF	-	-	-	-	-	F28P559SJ9-Q1, F28P550SJ9, F28P559SJ2-Q1, F28P559SJ6-Q1, F28P550SJ6
TI OTP Bank 4 ECC	192	0x0107_0C00	0x0107_0CBF	-	-	-	-	-	F28P559SJ9-Q1, F28P550SJ9, F28P559SJ2-Q1, F28P559SJ6-Q1, F28P550SJ6

7.3.1.1 Dedicated RAM (Mx RAM)

The CPU subsystem has two dedicated ECC-capable RAM blocks: M0 and M1. These memories are small nonsecure blocks that are tightly coupled with the CPU (that is, only the CPU has access to them).

7.3.1.2 Local Shared RAM (LSx RAM)

Local shared RAMs (LSx RAMs) are accessible to the CPU and CLA. All LSx RAM blocks have parity. These memories are secure and have CPU access protection (CPU write/CPU fetch).

7.3.1.3 Global Shared RAM (GSx RAM)

Global shared RAMs (GSx RAMs) are accessible from the CPU and DMA. The CPU and DMA have full read and write access to these memories. All GSx RAM blocks have parity. The GSx RAMs have access protection (CPU write/CPU fetch/DMA write/HIC write).

7.3.1.4 Message RAM

There are two types of message RAMs on this device that can be used to share between CPU, CLA and DMA. CLA-CPU message RAM shares data between the CLA and CPU while the CLA-DMA message RAM shares data between the CLA and DMA.

7.3.2 Control Law Accelerator (CLA) Memory Map

Table 7-2 shows the CLA data ROM memory map.

Table 7-2. CLA Data ROM Memory Map

MEMORY	START ADDRESS	LENGTH
FFT Tables (Load)	0x0100 1070	0x0800
Data (Load)	0x0100 1870	0x078A
Version (Load)	0x0100 1FFA	0x0006
FFT Tables (Run)	0x0000 F070	0x0800
Data (Run)	0x0000 F870	0x078A
Version (Run)	0x0000 FFFA	0x0006

Copyright © 2026 Texas Instruments Incorporated

7.3.3 Flash Memory Map

On the F28P55x devices, five flash banks (1084KB) are available. 4 banks are 256KB and the 5th bank is 64KB in size. Flash operations (erase and program) are performed at the bank level. Code cannot be executed from the same bank as an operation is being performed. Code can be allocated in a different flash bank, SRAM, or ROM while these operations are in progress. The *Addresses of Flash Sectors* table lists the addresses of flash sectors available for each part number.

7.3.3.1 Addresses of Flash Sectors

Table 7-3. Flash Memory Map

PART NUMBER	SECTOR	ADDRESS			ECC ADDRESS		
		SIZE	START	END	SIZE	START	END
OTP Sectors							
All F28P55x	TI OTP Bank 0 (Unsecure)	1520 x 16	0x0007 2000	0x0007 25EF	190 x 16	0x0107 0400	0x0107 04BD
	TI OTP Bank 0 (Secure)	16 x 16	0x0007 25F0	0x0007 25FF	2 x 16	0x0107 04BE	0x0107 04BE
	TI OTP Bank 2	1536 x 16	0x0007 4000	0x0007 45FF	192 x 16	0x0107 0800	0x0107 08BF
F28P55xSJx	TI OTP Bank 1	1536 x 16	0x0007 3000	0x0007 35FF	192 x 16	0x0107 0600	0x0107 06BF
	TI OTP Bank 3	1536 x 16	0x0007 5000	0x0007 55FF	192 x 16	0x0107 0A00	0x0107 0ABF
F28P55xSJx, F28P55xSGx	TI OTP Bank 4	1536 x 16	0x0007 6000	0x0007 65FF	192 x 16	0x0107 0C00	0x0107 0CBF
All F28P55x	User configurable DCSM Z1 OTP Bank 0	512 x 16	0x0007 8000	0x0007 81FF	64 x 16	0x0107 1000	0x0107 103F
	User configurable DCSM Z2 OTP Bank 0	512 x 16	0x0007 8200	0x0007 83FF	64 x 16	0x0107 1040	0x0107 107F
	User configurable OTP Bank 2	1K x 16	0x0007 9000	0x0007 93FF	128 x 16	0x0107 1100	0x0107 117F
F28P55xSJx	User configurable OTP Bank 1	1K x 16	0x0007 8800	0x0007 8BFF	128 x 16	0x0107 1080	0x0107 10FF
	User configurable OTP Bank 3	1K x 16	0x0007 9800	0x0007 9BFF	128 x 16	0x0107 1180	0x0107 11FF
F28P55xSJx, F28P55xSGx	User configurable OTP Bank 4	1K x 16	0x0007 A000	0x0007 A3FF	128 x 16	0x0107 1200	0x0107 127F
Bank 0 Sectors							
All	Sector 0	1K x 16	0x0008 0000	0x0008 03FF	128 x 16	0x0108 0000	0x0108 007F
	Sector 1	1K x 16	0x0008 0400	0x0008 07FF	128 x 16	0x0108 0080	0x0108 00FF
	Sector 2	1K x 16	0x000800800	0x0008 0BFF	128 x 16	0x0108 0100	0x0108 017F
	...	...	...	...	...	...	...
	Sector 125	1K x 16	0x0009 F400	0x0009 F7FF	128 x 16	0x0108 3E80	0x0108 3EFF
	Sector 126	1K x 16	0x0009 F800	0x0009 FBFF	128 x 16	0x0108 3F00	0x0108 3F7F
	Sector 127	1K x 16	0x0009 FC00	0x0009 FFFF	128 x 16	0x0108 3F80	0x0108 3FFF

Copyright © 2026 Texas Instruments Incorporated

Table 7-3. Flash Memory Map (continued)

PART NUMBER	SECTOR	ADDRESS			ECC ADDRESS		
		SIZE	START	END	SIZE	START	END
Bank 1 Sectors							
F28P55xSJx	Sector 0	1K x 16	0x000A 0000	0x000A 03FF	128 x 16	0x0108 4000	0x0108 407F
	Sector 1	1K x 16	0x000A 0400	0x000A 07FF	128 x 16	0x0108 4080	0x0108 40FF
	Sector 2	1K x 16	0x000A 0800	0x000A 0BFF	128 x 16	0x0108 4100	0x0108 417F
	...	...	...	...	...	...	...
	Sector 125	1K x 16	0x000B F400	0x000B F7FF	128 x 16	0x0108 7E80	0x0108 7EFF
	Sector 126	1K x 16	0x000B F800	0x000B FBFF	128 x 16	0x0108 7F00	0x0108 7F7F
	Sector 127	1K x 16	0x000B FC00	0x000B FFFF	128 x 16	0x0108 7F80	0x0108 7FFF
Bank 2 Sectors							
All	Sector 0	1K x 16	0x000C 0000	0x000C 03FF	128 x 16	0x0108 8000	0x0108 807F
	Sector 1	1K x 16	0x000C 0400	0x000C 07FF	128 x 16	0x0108 8080	0x0108 80FF
	Sector 2	1K x 16	0x000C 0800	0x000C 0BFF	128 x 16	0x0108 8100	0x0108 817F
	...	...	...	...	...	...	...
	Sector 125	1K x 16	0x000D F400	0x000D F7FF	128 x 16	0x0108 BE80	0x0108 BEFF
	Sector 126	1K x 16	0x000D F800	0x000D FBFF	128 x 16	0x0108 BF00	0x0108 BF7F
	Sector 127	1K x 16	0x000D FC00	0x000D FFFF	128 x 16	0x0108 BF80	0x0108 BFFF
Bank 3 Sectors							
F28P55xSJx	Sector 0	1K x 16	0x000E 0000	0x000E 03FF	128 x 16	0x0108 C000	0x0108 C07F
	Sector 1	1K x 16	0x000E 0400	0x000E 07FF	128 x 16	0x0108 C080	0x0108 C0FF
	Sector 2	1K x 16	0x000E 0800	0x000E 0BFF	128 x 16	0x0108 C100	0x0108 C17F
	...	...	...	...	...	...	...
	Sector 125	1K x 16	0x000F F400	0x000F F7FF	128 x 16	0x0108 FE80	0x0108 FEFF
	Sector 126	1K x 16	0x000F F800	0x000F FBFF	128 x 16	0x0108 FF00	0x0108 FF7F
	Sector 127	1K x 16	0x000F FC00	0x000F FFFF	128 x 16	0x0108F F80	0x0108 FFFF
Bank 4 Sectors							
F28P55xSJ9,F28P55xSJ6, F28P55xSG9	Sector 0	1K x 16	0x0010 0000	0x0010 03FF	128 x 16	0x0109 0000	0x0109 007F
	Sector 1	1K x 16	0x0010 0400	0x0010 07FF	128 x 16	0x0109 0080	0x0190 00FF
	Sector 2	1K x 16	0x0010 0800	0x0010 0BFF	128 x 16	0x0109 0100	0x0109 0180
	...	...	...	...	...	...	...
	Sector 29	1K x 16	0x0010 7400	0x0010 77FF	128 x 16	0x0109 0E80	0x0109 0EFF
	Sector 30	1K x 16	0x0010 7800	0x0010 7BFF	128 x 16	0x0109 0F00	0x0109 0F7F
	Sector 31	1K x 16	0x0010 7C00	0x0010 7FFF	128 x 16	0x0109 0F80	0x0109 0FFF

Copyright © 2026 Texas Instruments Incorporated

7.3.4 Peripheral Registers Memory Map

Table 7-4. Peripheral Registers Memory Map

Structure	DriverLib Name	Base Address	CPU1	CPU1.DMA	CPU1.CLA1	Pipeline Protected
Peripheral Frame 0 (PF0)						
CPUTIMER_REGS	CPUTIMER0_BASE	0x0000_0C00	YES	-	-	-
CLA_ONLY_REGS	CLA1_ONLY_BASE	0x0000_0C00	-	-	YES	-
CPUTIMER_REGS	CPUTIMER1_BASE	0x0000_0C08	YES	-	-	-
CPUTIMER_REGS	CPUTIMER2_BASE	0x0000_0C10	YES	-	-	-
PIE_CTRL_REGS	PIECTRL_BASE	0x0000_0CE0	YES	-	-	-
CLA_SOFTINT_REGS	CLA1_SOFTINT_BASE	0x0000_0CE0	-	-	YES	-
PIE_VECT_TABLE	PIEVECTTABLE_BASE	0x0000_0D00	YES	-	-	-
DMA_REGS	DMA_BASE	0x0000_1000	YES	-	-	-
DMA_CH_REGS	DMA_CH1_BASE	0x0000_1020	YES	-	-	-
DMA_CH_REGS	DMA_CH2_BASE	0x0000_1040	YES	-	-	-
DMA_CH_REGS	DMA_CH3_BASE	0x0000_1060	YES	-	-	-
DMA_CH_REGS	DMA_CH4_BASE	0x0000_1080	YES	-	-	-
DMA_CH_REGS	DMA_CH5_BASE	0x0000_10A0	YES	-	-	-
DMA_CH_REGS	DMA_CH6_BASE	0x0000_10C0	YES	-	-	-
CLA_REGS	CLA1_BASE	0x0000_1400	YES	-	-	-
ADC_RESULT_REGS	ADCARESULT_BASE	0x0000_1800	YES	YES	YES	-
ADC_RESULT_REGS	ADCBRESULT_BASE	0x0000_1880	YES	YES	YES	-
ADC_RESULT_REGS	ADCCRESULT_BASE	0x0000_1900	YES	YES	YES	-
ADC_RESULT_REGS	ADCDRESULT_BASE	0x0000_1980	YES	YES	YES	-
ADC_RESULT_REGS	ADCERESULT_BASE	0x0000_1A00	YES	YES	YES	-
PCTRACE_BUFFER_REGS	ERAD_PCTRACE_BUFFER_BASE	0x0005_FE00	YES	-	-	YES
UID_REGS	UID_BASE	0x0007_2168	YES	-	-	-
DCSM_Z1_OTP	DCSM_Z1OTP_BASE	0x0007_8000	YES	-	-	-
DCSM_Z2_OTP	DCSM_Z2OTP_BASE	0x0007_8200	YES	-	-	-
Peripheral Frame 1 (PF1)						
EPWM_REGS	EPWM1_BASE	0x0000_4000	YES	YES	YES	YES
EPWM_REGS	EPWM2_BASE	0x0000_4100	YES	YES	YES	YES
EPWM_REGS	EPWM3_BASE	0x0000_4200	YES	YES	YES	YES
EPWM_REGS	EPWM4_BASE	0x0000_4300	YES	YES	YES	YES
EPWM_REGS	EPWM5_BASE	0x0000_4400	YES	YES	YES	YES
EPWM_REGS	EPWM6_BASE	0x0000_4500	YES	YES	YES	YES
EPWM_REGS	EPWM7_BASE	0x0000_4600	YES	YES	YES	YES
EPWM_REGS	EPWM8_BASE	0x0000_4700	YES	YES	YES	YES

Copyright © 2026 Texas Instruments Incorporated

Table 7-4. Peripheral Registers Memory Map (continued)

Structure	DriverLib Name	Base Address	CPU1	CPU1.DMA	CPU1.CLA1	Pipeline Protected
EPWM_REGS	EPWM9_BASE	0x0000_4800	YES	YES	YES	YES
EPWM_REGS	EPWM10_BASE	0x0000_4900	YES	YES	YES	YES
EPWM_REGS	EPWM11_BASE	0x0000_4A00	YES	YES	YES	YES
EPWM_REGS	EPWM12_BASE	0x0000_4B00	YES	YES	YES	YES
EQEP_REGS	EQEP1_BASE	0x0000_5100	YES	YES	YES	YES
EQEP_REGS	EQEP2_BASE	0x0000_5140	YES	YES	YES	YES
EQEP_REGS	EQEP3_BASE	0x0000_5180	YES	YES	YES	YES
ECAP_REGS	ECAP1_BASE	0x0000_5200	YES	YES	YES	YES
ECAP_REGS	ECAP2_BASE	0x0000_5240	YES	YES	YES	YES
CMPSS_REGS	CMPSS1_BASE	0x0000_5500	YES	YES	YES	YES
CMPSS_REGS	CMPSS2_BASE	0x0000_5540	YES	YES	YES	YES
CMPSS_REGS	CMPSS3_BASE	0x0000_5580	YES	YES	YES	YES
CMPSS_REGS	CMPSS4_BASE	0x0000_55C0	YES	YES	YES	YES
PGA_REGS	PGA1_BASE	0x0000_5B00	YES	YES	YES	YES
PGA_REGS	PGA2_BASE	0x0000_5B10	YES	YES	YES	YES
PGA_REGS	PGA3_BASE	0x0000_5B20	YES	YES	YES	YES
DAC_REGS	DACA_BASE	0x0000_5C00	YES	YES	YES	YES
Peripheral Frame 2 (PF2)						
SPI_REGS	SPIA_BASE	0x0000_6100	YES	YES	YES	YES
SPI_REGS	SPIB_BASE	0x0000_6110	YES	YES	YES	YES
PMBUS_REGS	PMBUSA_BASE	0x0000_6400	YES	YES	YES	YES
FSI_TX_REGS	FSITXA_BASE	0x0000_6600	YES	YES	YES	YES
FSI_RX_REGS	FSIRXA_BASE	0x0000_6680	YES	YES	YES	YES
Peripheral Frame 3 (PF3)						
ADC_REGS	ADCC_BASE	0x0000_6A00	YES	-	YES	YES
ADC_REGS	ADCD_BASE	0x0000_6C00	YES	-	YES	YES
ADC_REGS	ADCE_BASE	0x0000_6E00	YES	-	YES	YES
ADC_REGS	ADCA_BASE	0x0000_7400	YES	-	YES	YES
ADC_REGS	ADCB_BASE	0x0000_7600	YES	-	YES	YES
Peripheral Frame 4 (PF4)						
INPUT_XBAR_REGS	INPUTXBAR_BASE	0x0000_7900	YES	-	-	YES
XBAR_REGS	XBAR_BASE	0x0000_7920	YES	-	-	YES
SYNC_SOC_REGS	SYNCSOC_BASE	0x0000_7940	YES	-	-	YES
INPUT_XBAR_REGS	CLBINPUTXBAR_BASE	0x0000_7960	YES	-	-	YES
DMA_CLA_SRC_SEL_REGS	DMACLASRCSEL_BASE	0x0000_7980	YES	-	-	YES

Copyright © 2026 Texas Instruments Incorporated

Table 7-4. Peripheral Registers Memory Map (continued)

Structure	DriverLib Name	Base Address	CPU1	CPU1.DMA	CPU1.CLA1	Pipeline Protected
EPWM_XBAR_REGS	EPWMXBAR_BASE	0x0000_7A00	YES	-	-	YES
CLB_XBAR_REGS	CLBXBAR_BASE	0x0000_7A40	YES	-	-	YES
OUTPUT_XBAR_REGS	OUTPUTXBAR_BASE	0x0000_7A80	YES	-	-	YES
OUTPUT_XBAR_REGS	CLBOUTPUTXBAR_BASE	0x0000_7BC0	YES	-	-	YES
GPIO_CTRL_REGS	GPIOCTRL_BASE	0x0000_7C00	YES	-	-	YES
GPIO_DATA_REGS	GPIODATA_BASE	0x0000_7F00	YES	-	YES	YES
GPIO_DATA_READ_REGS	GPIODATAREAD_BASE	0x0000_7F80	YES	-	YES	YES
DEV_CFG_REGS	DEVCFG_BASE	0x0005_D000	YES	-	-	YES
CLK_CFG_REGS	CLKCFG_BASE	0x0005_D200	YES	-	-	YES
CPU_SYS_REGS	CPUSYS_BASE	0x0005_D300	YES	-	-	YES
SYS_STATUS_REGS	SYSSTAT_BASE	0x0005_D400	YES	-	-	YES
PERIPH_AC_REGS	PERIPHAC_BASE	0x0005_D500	YES	-	-	YES
ANALOG_SUBSYS_REGS	ANALOGSUBSYS_BASE	0x0005_D700	YES	-	-	YES
Peripheral Frame 6 (PF6)						
ERAD_GLOBAL_REGS	ERAD_GLOBAL_BASE	0x0005_E800	YES	-	-	YES
ERAD_HWBP_REGS	ERAD_HWBP1_BASE	0x0005_E900	YES	-	-	YES
ERAD_HWBP_REGS	ERAD_HWBP2_BASE	0x0005_E908	YES	-	-	YES
ERAD_HWBP_REGS	ERAD_HWBP3_BASE	0x0005_E910	YES	-	-	YES
ERAD_HWBP_REGS	ERAD_HWBP4_BASE	0x0005_E918	YES	-	-	YES
ERAD_HWBP_REGS	ERAD_HWBP5_BASE	0x0005_E920	YES	-	-	YES
ERAD_HWBP_REGS	ERAD_HWBP6_BASE	0x0005_E928	YES	-	-	YES
ERAD_HWBP_REGS	ERAD_HWBP7_BASE	0x0005_E930	YES	-	-	YES
ERAD_HWBP_REGS	ERAD_HWBP8_BASE	0x0005_E938	YES	-	-	YES
ERAD_COUNTER_REGS	ERAD_COUNTER1_BASE	0x0005_E980	YES	-	-	YES
ERAD_COUNTER_REGS	ERAD_COUNTER2_BASE	0x0005_E990	YES	-	-	YES
ERAD_COUNTER_REGS	ERAD_COUNTER3_BASE	0x0005_E9A0	YES	-	-	YES
ERAD_COUNTER_REGS	ERAD_COUNTER4_BASE	0x0005_E9B0	YES	-	-	YES
ERAD_CRC_GLOBAL_REGS	ERAD_CRC_GLOBAL_BASE	0x0005_EA00	YES	-	-	YES
ERAD_CRC_REGS	ERAD_CRC1_BASE	0x0005_EA10	YES	-	-	YES
ERAD_CRC_REGS	ERAD_CRC2_BASE	0x0005_EA20	YES	-	-	YES
ERAD_CRC_REGS	ERAD_CRC3_BASE	0x0005_EA30	YES	-	-	YES
ERAD_CRC_REGS	ERAD_CRC4_BASE	0x0005_EA40	YES	-	-	YES
ERAD_CRC_REGS	ERAD_CRC5_BASE	0x0005_EA50	YES	-	-	YES
ERAD_CRC_REGS	ERAD_CRC6_BASE	0x0005_EA60	YES	-	-	YES
ERAD_CRC_REGS	ERAD_CRC7_BASE	0x0005_EA70	YES	-	-	YES

Copyright © 2026 Texas Instruments Incorporated

Table 7-4. Peripheral Registers Memory Map (continued)

Structure	DriverLib Name	Base Address	CPU1	CPU1.DMA	CPU1.CLA1	Pipeline Protected
ERAD_CRC_REGS	ERAD_CRC8_BASE	0x0005_EA80	YES	-	-	YES
PCTRACE_REGS	ERAD_PCTRACE_BASE	0x0005_EAD0	YES	-	-	YES
EPG_REGS	EPG1_BASE	0x0005_EC00	YES	-	-	YES
EPG_MUX_REGS	EPG1MUX_BASE	0x0005_ECD0	YES	-	-	YES
DCSM_Z1_REGS	DCSM_Z1_BASE	0x0005_F000	YES	-	-	YES
DCSM_Z2_REGS	DCSM_Z2_BASE	0x0005_F080	YES	-	-	YES
DCSM_COMMON_REGS	DCSMCOMMON_BASE	0x0005_F0C0	YES	-	-	YES
MEM_CFG_REGS	MEMCFG_BASE	0x0005_F400	YES	-	-	YES
ACCESS_PROTECTION_REGS	ACCESSPROTECTION_BASE	0x0005_F500	YES	-	-	YES
MEMORY_ERROR_REGS	MEMORYERROR_BASE	0x0005_F540	YES	-	-	YES
TEST_ERROR_REGS	TESTERROR_BASE	0x0005_F590	YES	-	-	YES
FLASH_CTRL_REGS	FLASH0CTRL_BASE	0x0005_F800	YES	-	-	YES
FLASH_ECC_REGS	FLASH0ECC_BASE	0x0005_FB00	YES	-	-	YES
Peripheral Frame 7 (PF7)						
EXT_EVT_REGS	EXTEVT_BASE	0x0005_4000	YES	-	-	YES
EXT_GPRCM_REGS	EXTGPRCM_BASE	0x0005_400A	YES	-	-	YES
IPSTANDARD_REGS	IPSTANDARD_BASE	0x0005_4020	YES	-	-	YES
IPSPECIFIC_REGS	IPSPECIFIC_BASE	0x0005_4100	YES	-	-	YES
DATA_REGS	DATA_BASE	0x0005_4700	YES	-	-	YES
ACC_REGS	ACC_BASE	0x0005_4C00	YES	-	-	YES
INSTRUCTION_REGS	INSTRUCTION_BASE	0x0005_5000	YES	-	-	YES
RFDATA_REGS	RFDATA_BASE	0x0005_5800	YES	-	-	YES
MCANSS_REGS	MCANASS_BASE	0x0005_9400	YES	-	-	YES
MCAN_REGS	MCANA_BASE	0x0005_9600	YES	-	-	YES
MCAN_ERROR_REGS	MCANA_ERROR_BASE	0x0005_9800	YES	-	-	YES
MCANSS_REGS	MCANBSS_BASE	0x0005_B400	YES	-	-	YES
MCAN_REGS	MCANB_BASE	0x0005_B600	YES	-	-	YES
MCAN_ERROR_REGS	MCANB_ERROR_BASE	0x0005_B800	YES	-	-	YES
DCC_REGS	DCC0_BASE	0x0005_E700	YES	-	-	YES
DCC_REGS	DCC1_BASE	0x0005_E740	YES	-	-	YES
Peripheral Frame 8 (PF8)						
LIN_REGS	LINA_BASE	0x0000_6800	YES	YES	YES	YES
Peripheral Frame 9 (PF9)						
WD_REGS	WD_BASE	0x0000_7000	YES	-	-	YES
NMI_INTRUPT_REGS	NMI_BASE	0x0000_7060	YES	-	-	YES

Copyright © 2026 Texas Instruments Incorporated

Table 7-4. Peripheral Registers Memory Map (continued)

Structure	DriverLib Name	Base Address	CPU1	CPU1.DMA	CPU1.CLA1	Pipeline Protected
XINT_REGS	XINT_BASE	0x0000_7070	YES	-	-	YES
SCI_REGS	SCIA_BASE	0x0000_7200	YES	-	-	YES
SCI_REGS	SCIB_BASE	0x0000_7210	YES	-	-	YES
SCI_REGS	SCIC_BASE	0x0000_7220	YES	-	-	YES
I2C_REGS	I2CA_BASE	0x0000_7300	YES	-	-	YES
I2C_REGS	I2CB_BASE	0x0000_7340	YES	-	-	YES
Peripheral Frame 10 (PF10)						
CLB_LOGIC_CONFIG_REGS	CLB1_LOGICCFG_BASE	0x0000_3000	YES	-	YES	YES
CLB_LOGIC_CONTROL_REGS	CLB1_LOGICCTRL_BASE	0x0000_3100	YES	-	YES	YES
CLB_DATA_EXCHANGE_REGS	CLB1_DATAEXCH_BASE	0x0000_3180	YES	-	YES	YES
CLB_LOGIC_CONFIG_REGS	CLB2_LOGICCFG_BASE	0x0000_3400	YES	-	YES	YES
CLB_LOGIC_CONTROL_REGS	CLB2_LOGICCTRL_BASE	0x0000_3500	YES	-	YES	YES
CLB_DATA_EXCHANGE_REGS	CLB2_DATAEXCH_BASE	0x0000_3580	YES	-	YES	YES
Peripheral Frame 11 (PF11)						
USB_REGS	USBA_BASE	0x0004_0000	YES	YES	-	YES
AES_REGS	AESA_BASE	0x0004_2000	YES	YES	-	YES
AES_SS_REGS	AESA_SS_BASE	0x0004_2C00	YES	YES	-	YES
Peripheral Frame 12 (PF12)						
LFU_REGS	LFU_BASE	0x0000_7FE0	YES	-	YES	YES

Copyright © 2026 Texas Instruments Incorporated

7.4 Identification

Table 7-5 lists the Device Identification Registers. Additional information on these device identification registers can be found in the *TMS320F28P55x Real-Time Microcontrollers Technical Reference Manual*. See the register descriptions of PARTIDH and PARTIDL for identification of production status (TMX or TMS) and other device information.

Table 7-5. Device Identification Registers

NAME	ADDRESS	SIZE (x16)	DESCRIPTION	
			Bits	*Options*
PARTIDL	0x0005 D008	2	14-13 INSTASPIN	1 = InstaSPIN-FOC 2 = NONE 3 = NONE
			10-8 PIN_COUNT	0 = 56 pin (QFN) 1 = 64 pin (QFP) 2 = 80 pin (QFP) 3 = 100 pin (QFP) 4 = 128 pin (QFP)
			7-6 QUAL	0 = Engineering Sample (TMX) 1 = Pilot Production (TMP) 2 = Fully Qualified (TMS)
PARTIDH	0x0005 D00A	2	Device part identification number	
			TMS320F28P55xSJ9	0x09FF 0500
			TMS320F28P55xSJ6	0x09FC 0500
			TMS320F28P55xSJ2	0x09F8 0500
			TMS320F28P55xSG9	0x09F5 0500
			TMS320F28P55xSG8	0x09F4 0500
			TMS320F28P55xSG2	0x09EE 0500
REVID	0x0005 D00C	2	Silicon revision number	
			Revision 0	0x0000 0001
			Revision A	0x0000 0002
UID_UNIQUE	0x0007 2172	4	Unique identification number. This number is different on each individual device with the same PARTIDH. This unique number can be used as a serial number in the application. This number is present only on TMS devices.	

Copyright © 2026 Texas Instruments Incorporated

7.5 Bus Architecture – Peripheral Connectivity

The *Peripheral Connectivity* table lists a broad view of the peripheral and configuration register accessibility from each bus controller.

Table 7-6. Peripheral Connectivity

PERIPHERAL	DMA	CLA	C28
SYSTEM PERIPHERALS			
CPU Timers			Y
ERAD			Y
GPIO Data		Y	Y
GPIO Pin Mapping and Configuration			Y
XBAR Configuration			Y
System Configuration			Y
AES	Y		Y
EPG			Y
LFU		Y	Y
DCC			Y
MEMORY			
M0/M1			Y
LSx		Y	Y
GSx	Y		Y
ROM			Y
FLASH			Y
CONTROL PERIPHERALS			
ePWM/HRPWM	Y	Y	Y
eCAP	Y	Y	Y
eQEP (1)	Y	Y	Y
CLB		Y	Y
ANALOG PERIPHERALS			
CMPSS (1)	Y	Y	Y
DAC (1)	Y	Y	Y
ADC Configuration		Y	Y
ADC Results (1)	Y	Y	Y
PGA (1)	Y	Y	Y
COMMUNICATION PERIPHERALS			
MCAN(CAN-FD) (1)	Y		Y
FSITX/FSIRX	Y	Y	Y
I2C			Y
LIN	Y	Y	Y
PMBus	Y	Y	Y
SCI			Y
SPI	Y	Y	Y
USB (1)	Y		Y

(1) These modules are accessible from DMA but cannot trigger a DMA transfer.

Copyright © 2026 Texas Instruments Incorporated

7.6 C28x Processor

The CPU is a 32-bit fixed-point processor. This device draws from the best features of digital signal processing; reduced instruction set computing (RISC); and microcontroller architectures, firmware, and tool sets.

The CPU features include a modified Harvard architecture and circular addressing. The RISC features are single-cycle instruction execution, register-to-register operations, and modified Harvard architecture. The microcontroller features include ease of use through an intuitive instruction set, byte packing and unpacking, and bit manipulation. The modified Harvard architecture of the CPU enables instruction and data fetches to be performed in parallel. The CPU can read instructions and data while it writes data simultaneously to maintain the single-cycle instruction operation across the pipeline. The CPU does this over six separate address/data buses.

For more information on CPU architecture and instruction set, see the *TMS320C28x CPU and Instruction Set Reference Guide*.

7.6.1 Floating-Point Unit (FPU)

The C28x plus floating-point (C28x+FPU) processor extends the capabilities of the C28x fixed-point CPU by adding registers and instructions to support IEEE single-precision floating-point operations.

Devices with the C28x+FPU include the standard C28x register set plus an additional set of floating-point unit registers. The additional floating-point unit registers are the following:

- Eight floating-point result registers, RnH (where n = 0–7)
- Floating-point Status Register (STF)
- Repeat Block Register (RB)

All of the floating-point registers, except the RB, are shadowed. This shadowing can be used in high-priority interrupts for fast context save and restore of the floating-point registers.

For more information on the C28x Floating Point Unit (FPU), see the *TMS320C28x Extended Instruction Sets Technical Reference Manual*.

7.6.2 Trigonometric Math Unit (TMU)

The trigonometric math unit (TMU) extends the capabilities of a C28x+FPU by adding instructions and leveraging existing FPU instructions to speed up the execution of common trigonometric and arithmetic operations listed in Table 7-7.

Table 7-7. TMU Supported Instructions

Instructions	C Equivalent Operation	Pipeline Cycles
MPY2PIF32 RaH,RbH	a = b * 2pi	2/3
DIV2PIF32 RaH,RbH	a = b / 2pi	2/3
DIVF32 RaH,RbH,RcH	a = b/c	5
SQRTF32 RaH,RbH	a = sqrt(b)	5
SINPUF32 RaH,RbH	a = sin(b*2pi)	4
COSPUF32 RaH,RbH	a = cos(b*2pi)	4
ATANPUF32 RaH,RbH	a = atan(b)/2pi	4
QUADF32 RaH,RbH,RcH,RdH	Operation to assist in calculating ATANPU2	5

Exponent instruction IEXP2F32 and logarithmic instruction LOG2F32 have been added to support computation of floating-point power function for the nonlinear proportional integral derivative control (NLPID) component of the C2000 Digital Control Library. These two added instructions reduce the power function calculations from a typical of 300 cycles using library emulation to less than 10 cycles.

No changes have been made to existing instructions, pipeline, or memory bus architecture. All TMU instructions use the existing FPU register set (R0H to R7H) to carry out the operations.

For more information, see the *TMS320C28x Extended Instruction Sets Technical Reference Manual*.

Copyright © 2026 Texas Instruments Incorporated

7.6.3 VCRC Unit

Cyclic redundancy check (CRC) algorithms provide a straightforward method for verifying data integrity over large data blocks, communication packets, or code sections. The C28x+VCRC can perform 8-bit, 16-bit, 24-bit, and 32-bit CRCs. For example, the VCRC can compute the CRC for a block length of 10 bytes in 10 cycles. A CRC result register contains the current CRC, which is updated whenever a CRC instruction is executed.

The following are the CRC polynomials used by the CRC calculation logic of the VCRC:

- CRC8 polynomial = 0x07
- CRC16 polynomial 1 = 0x8005
- CRC16 polynomial 2 = 0x1021
- CRC24 polynomial = 0x5d6dcb
- CRC32 polynomial 1 = 0x04c11db7
- CRC32 polynomial 2 = 0x1edc6f41

This module can calculate CRCs for a byte of data in a single cycle. The CRC calculation for CRC8, CRC16, CRC24, and CRC32 is done byte-wise (instead of computing on a complete 16-bit or 32-bit data read by the C28x core) to match the byte-wise computation requirement mandated by various standards.

The VCRC Unit also allows the user to provide the size (1b-32b) and value of any polynomial to fit custom CRC requirements. The CRC execution time increases to three cycles when using a custom polynomial.

For more information on the Cyclic Redundancy Check (VCRC) instruction sets, see the *TMS320C28x Extended Instruction Sets Technical Reference Manual*.

7.7 Control Law Accelerator (CLA)

The CLA Type-2 is an independent, fully programmable, 32-bit floating-point math processor that brings concurrent control-loop execution to the C28x family. The low interrupt-latency of the CLA allows it to read ADC samples "just-in-time." This significantly reduces the ADC sample to output delay to enable faster system response and higher MHz control loops. By using the CLA to service time-critical control loops, the main CPU is free to perform other system tasks such as communications and diagnostics.

The control law accelerator extends the capabilities of the C28x CPU by adding parallel processing. Time-critical control loops serviced by the CLA can achieve low ADC sample to output delay. Thus, the CLA enables faster system response and higher frequency control loops. Using the CLA for time-critical tasks frees up the main CPU to perform other system and communication functions concurrently.

The following is a list of major features of the CLA:

- C compilers are available for CLA software development
- Clocked at the same rate as the main CPU (SYSCLKOUT).
- An independent architecture allowing CLA algorithm execution independent of the main C28x CPU.
  - Complete bus architecture:
    - Program Address Bus (PAB) and Program Data Bus (PDB)
    - Data Read Address Bus (DRAB), Data Read Data Bus (DRDB), Data Write Address Bus (DWAB), and Data Write Data Bus (DWDB)
  - Independent 8-stage pipeline.
  - 16-bit program counter (MPC)
  - Four 32-bit result registers (MR0 to MR3)
  - Two 16-bit auxiliary registers (MAR0, MAR1)
  - Status register (MSTF)
- Instruction set includes:
  - IEEE single-precision (32-bit) floating-point math operations
  - Floating-point math with parallel load or store
  - Floating-point multiply with parallel add or subtract
  - 1/X and 1/sqrt(X) estimations
  - Data type conversions

Copyright © 2026 Texas Instruments Incorporated

  - Conditional branch and call
  - Data load/store operations
- The CLA program code can consist of up to eight tasks or interrupt service routines, or seven tasks and a main background task.
  - The start address of each task is specified by the MVECT registers.
  - No limit on task size as long as the tasks fit within the configurable CLA program memory space.
  - One task is serviced at a time until its completion. There is no nesting of tasks.
  - Upon task completion a task-specific interrupt is flagged within the PIE.
  - When a task finishes the next highest-priority pending task is automatically started.
  - The Type-2 CLA can have a main task that runs continuously in the background, while other high-priority events trigger a foreground task.
- Task trigger mechanisms:
  - C28x CPU through the IACK instruction
  - Task1 to Task8: up to 256 possible trigger sources from peripherals connected to the shared bus on which the CLA assumes secondary ownership.
  - Task8 can be set to be the background task, while Tasks 1 to 7 take peripheral triggers.
- Memory and Shared Peripherals:
  - Two dedicated message RAMs for communication between the CLA and the main CPU.
  - The C28x CPU can map CLA program and data memory to the main CPU space or CLA space.
  - Two dedicated message RAMs for communication between the CLA and the DMA

Copyright © 2026 Texas Instruments Incorporated

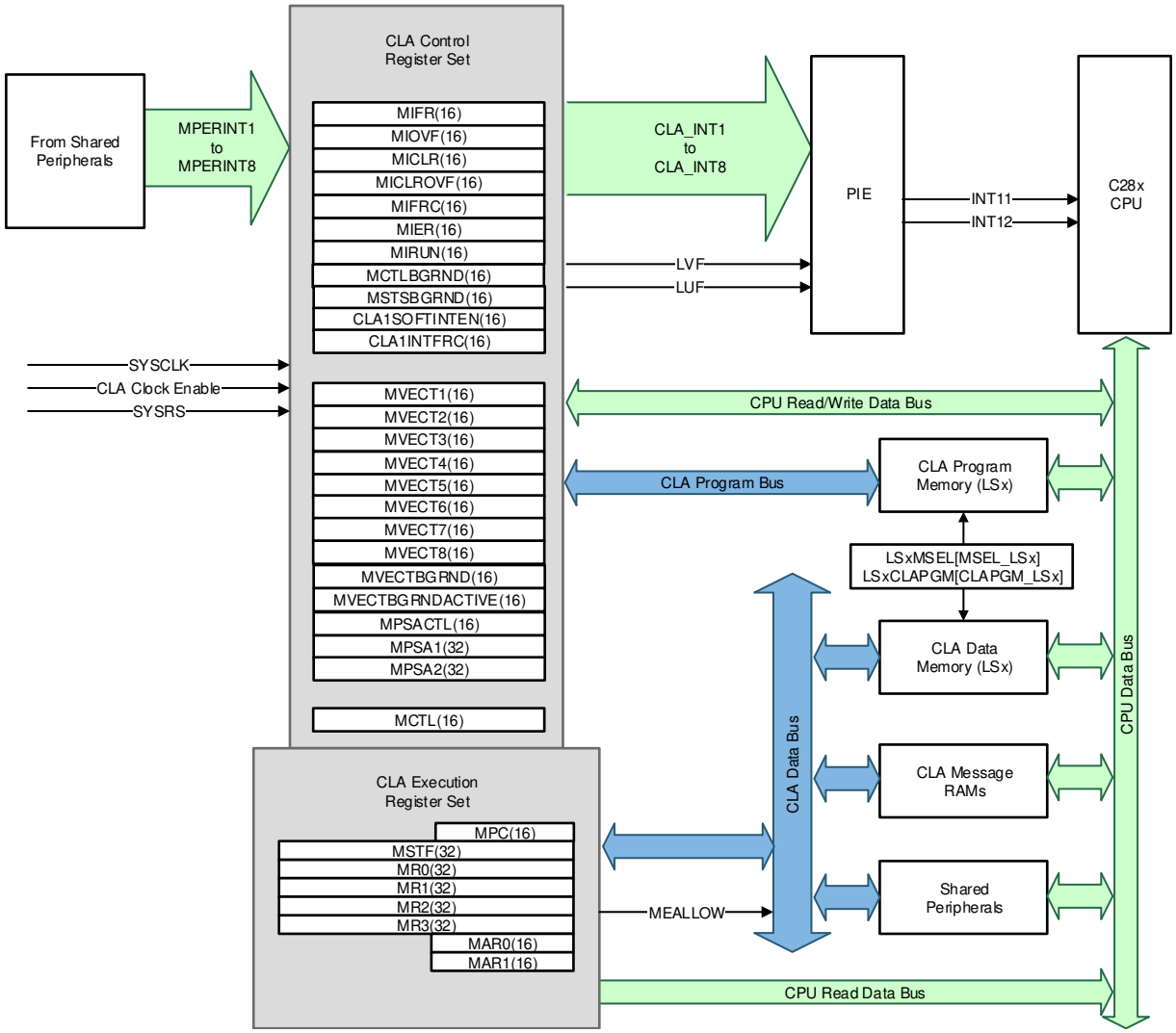

Figure 7-2. CLA Block Diagram

Copyright © 2026 Texas Instruments Incorporated

7.8 Embedded Real-Time Analysis and Diagnostic (ERAD)

The ERAD module enhances the debug and system-analysis capabilities of the device. The debug and system-analysis enhancements provided by the ERAD module is done outside of the CPU. The ERAD module consists of the Enhanced Bus Comparator units and the System Event Counter units. The Enhanced Bus Comparator units are used to generate hardware breakpoints, hardware watch points, and other output events. The System Event Counter units are used to analyze and profile the system. The ERAD module is accessible by the debugger and by the application software, which significantly increases the debug capabilities of many real-time systems, especially in situations where debuggers are not connected. The ERAD module has a Program Counter Trace (PC Trace) that can track PC discontinuities. In the TMS320F28P55x devices, the ERAD module contains eight Enhanced Bus Comparator units (which increases the number of Hardware breakpoints from two to ten) and four Benchmark System Event Counter units.

Copyright © 2026 Texas Instruments Incorporated

7.9 Direct Memory Access (DMA)

The DMA module provides a hardware method of transferring data between peripherals and/or memory without intervention from the CPU, thereby freeing up bandwidth for other system functions. Additionally, the DMA has the capability to orthogonally rearrange the data as it is transferred as well as “ping-pong” data between buffers. These features are useful for structuring data into blocks for optimal CPU processing. Figure 7-3 shows a device-level block diagram of the DMA.

DMA features include:

- Six channels with independent ePIE interrupts
- Peripheral interrupt trigger sources
  - ADC interrupts and EVT signals
  - External Interrupts
  - ePWM SOC signals
  - CPU timers
  - eCAP
  - SPI transmit and receive
  - LIN transmit and receive
- Data sources and destinations:
  - GSx RAM
  - ADC result registers
  - Control peripheral registers (ePWM, eQEP, eCAP)
  - Communication peripheral registers (SPI, LIN, CAN, PMBus , FSI)
  - USB
  - PGA control registers
- Word Size: 16-bit or 32-bit (SPI limited to 16-bit)
- Throughput: Three cycles per word without arbitration

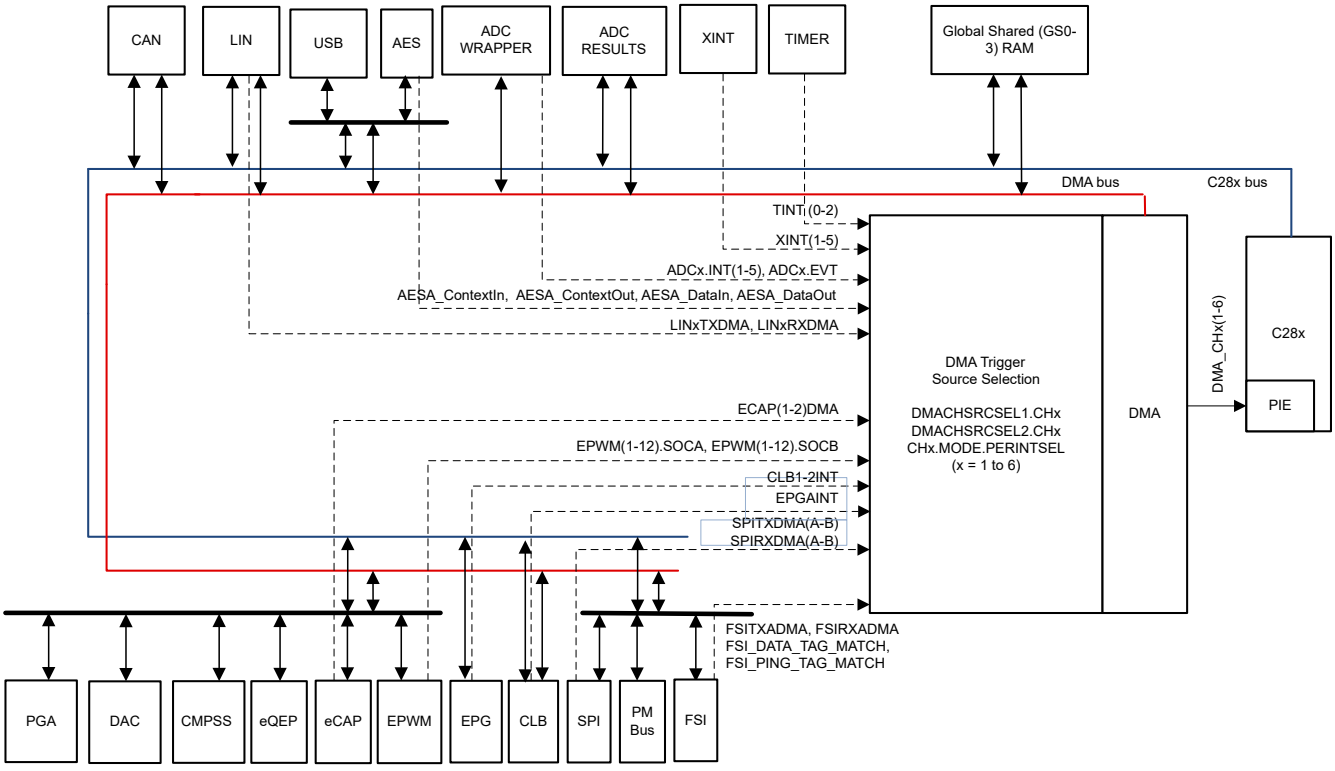

Figure 7-3. DMA Block Diagram

Copyright © 2026 Texas Instruments Incorporated

Note

Peripheral registers with EALLOW protections are write protected from spurious DMA writes. To write these registers with the DMA, disable the EALLOW protection mechanism.

Copyright © 2026 Texas Instruments Incorporated

7.10 Device Boot Modes

This section explains the default boot modes, as well as all the available boot modes supported on this device. The boot ROM uses the boot mode select, general-purpose input/output (GPIO) pins to determine the boot mode configuration.

Table 7-8 shows the boot mode options available for selection by the default boot mode select pins. Users have the option to program the device to customize the boot modes selectable in the boot-up table as well as the boot mode select pin GPIOs used.

All the peripheral boot modes that are supported use the first instance of the peripheral module (SCIA, SPIA, I2CA, CANA, and so forth). Whenever these boot modes are referred to in this chapter, such as SCI boot, it is actually referring to the first module instance, which means the SCI boot on the SCIA port. The same applies to the other peripheral boots.

See the *Reset - XRSn - Switching Characteristics* table and the *Power-on Reset* figure for $t_{boot\text{-}flash}$, the boot ROM execution time to first instruction fetch in flash.

Table 7-8. Device Default Boot Modes

BOOT MODE	GPIO24 (DEFAULT BOOT MODE SELECT PIN 1)	GPIO32 (DEFAULT BOOT MODE SELECT PIN 0)
Parallel IO	0	0
SCI / Wait Boot (1)	0	1
CAN(MCAN-NONFD)	1	0
Flash(USB) (2)	1	1

(1) SCI boot mode can be used as a wait boot mode as long as SCI continues to wait for an 'A' or 'a' during the SCI autobaud lock process.
(2) If the default flash entry address is not programmed, the boot mode will switch to USB Boot for those devices that include the USB peripheral. On devices without a USB, the action will be to enter the ITRAP ISR if the default flash entry address is not programmed. The switch to USB boot is only supported for the default flash entry address option and not all entry address options.

Copyright © 2026 Texas Instruments Incorporated

7.10.1 Device Boot Configurations

This section details what boot configurations are available and how to configure them. This device supports from 0 boot mode select pins up to 3 boot mode select pins as well as from 1 configured boot mode up to 8 configured boot modes.

To change and configure the device from the default settings to custom settings for your application, use the following process:

1. Determine all the various ways you want application to be able to boot. (For example: Primary boot option of Flash boot for your main application, secondary boot option of CAN boot for firmware updates, tertiary boot option of SCI boot for debugging, etc)
2. Based on the number of boot modes needed, determine how many boot mode select pins (BMSPs) are required to select between your selected boot modes. (For example: 2 BMSPs are required to select between 3 boot mode options)
3. Assign the required BMSPs to a physical GPIO pin. (For example, BMSP0 to GPIO10, BMSP1 to GPIO51, and BMSP2 left as default which is disabled). Refer to Section 7.10.1.1 for all the details on performing these configurations.
4. Assign the determined boot mode definitions to indexes in your custom boot table that correlate to the decoded value of the BMSPs. For example, BOOTDEF0=Boot to Flash, BOOTDEF1=CAN Boot, BOOTDEF2=SCI Boot; all other BOOTDEFx are left as default/nothing). Refer to Section 7.10.1.2 for all the details on setting up and configuring the custom boot mode table.

Additionally, the *Boot Mode Example Use Cases* section of the *TMS320F28P55x Real-Time Microcontrollers Technical Reference Manual* provides some example use cases on how to configure the BMSPs and custom boot tables.

Note

The CAN boot mode turns on the XTAL. Be sure an XTAL is installed in the application before using CAN boot mode.

7.10.1.1 Configuring Boot Mode Pins

This section explains how the boot mode select pins can be customized by the user, by programming the BOOTPIN-CONFIG location (refer to Table 7-9) in the user-configurable dual-zone security module (DCSM) OTP. The location in the DCSM OTP is Z1-OTP-BOOTPIN-CONFIG or Z2-OTP-BOOTPIN-CONFIG. When debugging, EMU-BOOTPIN-CONFIG is the emulation equivalent of Z1-OTP-BOOTPIN-CONFIG/Z2-OTP-BOOTPIN-CONFIG, and can be programmed to experiment with different boot modes without writing to OTP. The device can be programmed to use 0, 1, 2, or 3 boot mode select pins as needed.

Note

When using Z2-OTP-BOOTPIN-CONFIG, the configurations programmed in this location will take priority over the configurations in Z1-OTP-BOOTPIN-CONFIG. It is recommended to use Z1-OTP-BOOTPIN-CONFIG first and then if OTP configurations need to be altered, switch to using Z2-OTP-BOOTPIN-CONFIG.

Table 7-9. BOOTPIN-CONFIG Bit Fields

BIT	NAME	DESCRIPTION
31:24	Key	Write 0x5A to these 8-bits to indicate the bits in this register are valid
23:16	Boot Mode Select Pin 2 (BMSP2)	Refer to BMSP0 description except for BMSP2
15:8	Boot Mode Select Pin 1 (BMSP1)	Refer to BMSP0 description except for BMSP1
7:0	Boot Mode Select Pin 0 (BMSP0)	Set to the GPIO pin to be used during boot (up to 255): - 0x0 = GPIO0 - 0x01 = GPIO1 - and so on Writing 0xFF disables BMSP0 and this pin is no longer used to select the boot mode.

The following GPIOs cannot be used as a BMSP. If selected for a particular BMSP, the boot ROM automatically selects the factory default GPIO (the factory default for BMSP2 is 0xFF, which disables the BMSP).

- GPIO 20 and GPIO 21
- GPIO 36 and GPIO 38
- GPIO 62 to GPIO 223

Copyright © 2026 Texas Instruments Incorporated

Table 7-10. Standalone Boot Mode Select Pin Decoding

BOOTPIN_CONFIG KEY	BMSP0	BMSP1	BMSP2	REALIZED BOOT MODE
!= 0x5A	Don't Care	Don't Care	Don't Care	Boot as defined by the factory default BMSPs
= 0x5A	0xFF	0xFF	0xFF	Boot as defined in the boot table for boot mode 0 (All BMSPs disabled)
	Valid GPIO	0xFF	0xFF	Boot as defined by the value of BMSP0 (BMSP1 and BMSP2 disabled)
	0xFF	Valid GPIO	0xFF	Boot as defined by the value of BMSP1 (BMSP0 and BMSP2 disabled)
	0xFF	0xFF	Valid GPIO	Boot as defined by the value of BMSP2 (BMSP0 and BMSP1 disabled)
	Valid GPIO	Valid GPIO	0xFF	Boot as defined by the values of BMSP0 and BMSP1 (BMSP2 disabled)
	Valid GPIO	0xFF	Valid GPIO	Boot as defined by the values of BMSP0 and BMSP2 (BMSP1 disabled)
	0xFF	Valid GPIO	Valid GPIO	Boot as defined by the values of BMSP1 and BMSP2 (BMSP0 disabled)
	Valid GPIO	Valid GPIO	Valid GPIO	Boot as defined by the values of BMSP0, BMSP1, and BMSP2
	Invalid GPIO	Valid GPIO	Valid GPIO	BMSP0 is reset to the factory default BMSP0 GPIO Boot as defined by the values of BMSP0, BMSP1, and BMSP2
	Valid GPIO	Invalid GPIO	Valid GPIO	BMSP1 is reset to the factory default BMSP1 GPIO Boot as defined by the values of BMSP0, BMSP1, and BMSP2
	Valid GPIO	Valid GPIO	Invalid GPIO	BMSP2 is reset to the factory default state, which is disabled Boot as defined by the values of BMSP0 and BMSP1

Note

When decoding the boot mode, BMSP0 is the least-significant-bit and BMSP2 is the most-significant-bit of the boot table index value. It is recommended when disabling BMSPs to start with disabling BMSP2. For example, in an instance when only using BMSP2 (BMSP1 and BMSP0 are disabled), then only the boot table indexes of 0 and 4 will be selectable. In the instance when using only BMSP0, then the selectable boot table indexes are 0 and 1.

Copyright © 2026 Texas Instruments Incorporated

7.10.1.2 Configuring Boot Mode Table Options

This section explains how to configure the boot definition table, BOOTDEF, for the device and the associated boot options. The 64-bit location is located in user-configurable DCSM OTP in the Z1-OTP-BOOTDEF-LOW and Z1-OTP-BOOTDEF-HIGH locations. When debugging, EMU-BOOTDEF-LOW and EMU-BOOTDEF-HIGH are the emulation equivalents of Z1-OTP-BOOTDEF-LOW and Z1-OTP-BOOTDEF-HIGH, and can be programmed to experiment with different boot mode options without writing to OTP. The range of customization to the boot definition table depends on how many boot mode select pins (BMSP) are being used. For example, 0 BMSPs equals to 1 table entry, 1 BMSP equals to 2 table entries, 2 BMSPs equals to 4 table entries, and 3 BMSPs equals to 8 table entries. Refer to the *TMS320F28P55x Real-Time Microcontrollers Technical Reference Manual* for examples on how to set up the BOOTPIN_CONFIG and BOOTDEF values.

Note

The locations Z2-OTP-BOOTDEF-LOW and Z2-OTP-BOOTDEF-HIGH will be used instead of Z1-OTP-BOOTDEF-LOW and Z1-OTP-BOOTDEF-HIGH locations when Z2-OTP-BOOTPIN-CONFIG is configured. Refer to Configuring Boot Mode Pins for more details on BOOTPIN_CONFIG usage.

Table 7-11. BOOTDEF Bit Fields

BOOTDEF NAME	BYTE POSITION	NAME	DESCRIPTION
BOOT_DEF0	7:0	BOOT_DEF0 Mode/Options	Set the boot mode for index 0 of the boot table. Different boot modes and their options can include, for example, a boot mode that uses different GPIOs for a specific bootloader or a different flash entry point address. Any unsupported boot mode will cause the device to either go to wait boot or boot to flash. Refer to the *GPIO Assignments* section for valid BOOTDEF values to set in the table.
BOOT_DEF1	15:8	BOOT_DEF1 Mode/Options	Refer to BOOT_DEF0 description
BOOT_DEF2	23:16	BOOT_DEF2 Mode/Options	
BOOT_DEF3	31:24	BOOT_DEF3 Mode/Options	
BOOT_DEF4	39:32	BOOT_DEF4 Mode/Options	
BOOT_DEF5	47:40	BOOT_DEF5 Mode/Options	
BOOT_DEF6	55:48	BOOT_DEF6 Mode/Options	
BOOT_DEF7	63:56	BOOT_DEF7 Mode/Options	

Copyright © 2026 Texas Instruments Incorporated

7.10.2 GPIO Assignments

This section details the GPIOs and boot option values used for boot mode set in the BOOT_DEF memory location located at Z1-OTP-BOOTDEF-LOW/ Z2-OTP-BOOTDEF-LOW and Z1-OTP-BOOTDEF-HIGH/ Z2-OTP-BOOTDEF-HIGH. Refer to Configuring Boot Mode Table Options on how to configure BOOT_DEF. When selecting a boot mode option, make sure to verify that the necessary pins are available in the pin mux options for the specific device package being used.

Table 7-12. SCI Boot Options

OPTION	BOOTDEF VALUE	SCITXDA GPIO	SCIRXDA GPIO
0 (default)	0x01	GPIO29	GPIO28
1	0x21	GPIO1	GPIO0
2	0x41	GPIO8	GPIO9
3	0x61	GPIO7	GPIO3
4	0x81	GPIO16	GPIO3

Table 7-13. MCAN Boot Options

OPTION	BOOTDEF VALUE	CANTXA GPIO	CANRXA GPIO
0 (default)	0x08	GPIO4	GPIO5
1	0x28	GPIO1	GPIO0
2	0x48	GPIO13	GPIO12

Table 7-14. CAN(MCAN in non-FD mode) Boot Options

OPTION	BOOTDEF VALUE	CANTXA GPIO	CANRXA GPIO
0 (default)	0x02	GPIO4	GPIO5
1	0x22	GPIO1	GPIO0
2	0x42	GPIO13	GPIO12

Table 7-15. I2C Boot Options

OPTION	BOOTDEF VALUE	SDAA GPIO	SCLA GPIO
0	0x07	GPIO0	GPIO1
1	0x27	GPIO32	GPIO33
2	0x47	GPIO5	GPIO4

Table 7-16. RAM Boot Options

OPTION	BOOTDEF VALUE	RAM ENTRY POINT (ADDRESS)
0	0x05	0x0000 0000

Table 7-17. Flash/Secure Flash Boot Options

OPTION	BOOTDEF VALUE	FLASH ENTRY POINT (ADDRESS)	FLASH SECTOR
0 (default)	0x03	0x0008 0000	Bank0 Sector 0
1	0x23	0x0008 8000	Bank 0 Sector 32
2	0x43	0x000C 0000	Bank 2 Sector 0
3	0x63	0x000C 8000	Bank 2, Sector 32
4	0x83	0x0010 0000	Bank 4, Sector 0

Copyright © 2026 Texas Instruments Incorporated

Table 7-18. LFU Flash Boot Options

OPTION	BOOTDEF VALUE	FLASH ENTRY POINT (ADDRESS)	BANK
0 (default)	0x0B	0x0008 0000	Bank0
		0x000C 0000	Bank2
1	0x2B	0x0008 8000	Bank0
		0x000C 8000	Bank2

Table 7-19. Wait Boot Options

OPTION	BOOTDEF VALUE	WATCHDOG
0	0x04	Enabled
1	0x24	Disabled

Table 7-20. SPI Boot Options

OPTION	BOOTDEF VALUE	SPIPICOA	SPIPOCIA	SPICLKA	SPIPTE
0	0x06	GPIO2	GPIO1	GPIO3	GPIO5
1	0x26	GPIO16	GPIO1	GPIO3	GPIO0
2	0x46	GPIO8	GPIO10	GPIO9	GPIO11
3	0x66	GPIO16	GPIO12	GPIO9	GPIO24

Table 7-21. Parallel Boot Options

OPTION	BOOTDEF VALUE	D0-D7 GPIO	28x(DSP) CONTROL GPIO	HOST CONTROL GPIO
0 (default)	0x00	D0 - GPIO0	GPIO16	GPIO29
		D1 - GPIO1		
		D2 - GPIO2		
		D3 - GPIO3		
		D4 - GPIO4		
		D5 - GPIO5		
		D6 - GPIO6		
		D7 - GPIO7		
1	0x20	D0 - GPIO0	GPIO12	GPIO13
		D1 - GPIO1		
		D2 - GPIO2		
		D3 - GPIO3		
		D4 - GPIO5		
		D5 - GPIO6		
		D6 - GPIO7		
		D7 - GPIO24		

Table 7-22. USB Boot Options

OPTION	BOOTDEF VALUE	USB0 DM	USB0 DP
0 (default)	0x09	GPIO23	GPIO41

7.11 Security

Security features are enforced by the Dual Code Security Module (DCSM). The primary layer of defense is securing the boundary of the chip, which should always be enabled. Additionally, the Dual Zone Security feature is available to support code partitioning.

Copyright © 2026 Texas Instruments Incorporated

7.11.1 Securing the Boundary of the Chip

The following two features, along with authentication in the firmware update code, should be used to help to prevent unauthorized code from running on the device.

7.11.1.1 JTAGLOCK

Enabling the JTAGLOCK feature in the USER OTP disables JTAG access (for example, debug probe) to resources on the device.

7.11.1.2 Zero-pin Boot

Enabling the Zero-pin Boot option along with Flash Boot in the USER OTP blocks all pin-based external bootloader options (for example, SCI, CAN, Parallel).

7.11.2 Dual-Zone Security

The dual-zone security mechanism offers protection for two zones: Zone 1 (Z1) and Zone 2 (Z2). The security implementation for both zones is identical. Each zone has its own dedicated secure resource (OTP memory and secure ROM) and allocated secure resource (LSx RAM and flash sectors).

7.11.3 Disclaimer

Code Security Module Disclaimer

THE CODE SECURITY MODULE (CSM) INCLUDED ON THIS DEVICE WAS DESIGNED TO PASSWORD PROTECT THE DATA STORED IN THE ASSOCIATED MEMORY AND IS WARRANTED BY TEXAS INSTRUMENTS (TI), IN ACCORDANCE WITH ITS STANDARD TERMS AND CONDITIONS, TO CONFORM TO TI'S PUBLISHED SPECIFICATIONS FOR THE WARRANTY PERIOD APPLICABLE FOR THIS DEVICE.

TI DOES NOT, HOWEVER, WARRANT OR REPRESENT THAT THE CSM CANNOT BE COMPROMISED OR BREACHED OR THAT THE DATA STORED IN THE ASSOCIATED MEMORY CANNOT BE ACCESSED THROUGH OTHER MEANS. MOREOVER, EXCEPT AS SET FORTH ABOVE, TI MAKES NO WARRANTIES OR REPRESENTATIONS CONCERNING THE CSM OR OPERATION OF THIS DEVICE, INCLUDING ANY IMPLIED WARRANTIES OF MERCHANTABILITY OR FITNESS FOR A PARTICULAR PURPOSE.

IN NO EVENT SHALL TI BE LIABLE FOR ANY CONSEQUENTIAL, SPECIAL, INDIRECT, INCIDENTAL, OR PUNITIVE DAMAGES, HOWEVER CAUSED, ARISING IN ANY WAY OUT OF YOUR USE OF THE CSM OR THIS DEVICE, WHETHER OR NOT TI HAS BEEN ADVISED OF THE POSSIBILITY OF SUCH DAMAGES. EXCLUDED DAMAGES INCLUDE, BUT ARE NOT LIMITED TO LOSS OF DATA, LOSS OF GOODWILL, LOSS OF USE OR INTERRUPTION OF BUSINESS OR OTHER ECONOMIC LOSS.

Copyright © 2026 Texas Instruments Incorporated

7.12 Watchdog

The watchdog module is the same as the one on previous TMS320C2000™ microcontrollers, but with an optional lower limit on the time between software resets of the counter. This windowed countdown is disabled by default, so the watchdog is fully backward-compatible.

The watchdog generates either a reset or an interrupt. It is clocked from the internal oscillator with a selectable frequency divider.

Figure 7-4 shows the various functional blocks within the watchdog module.

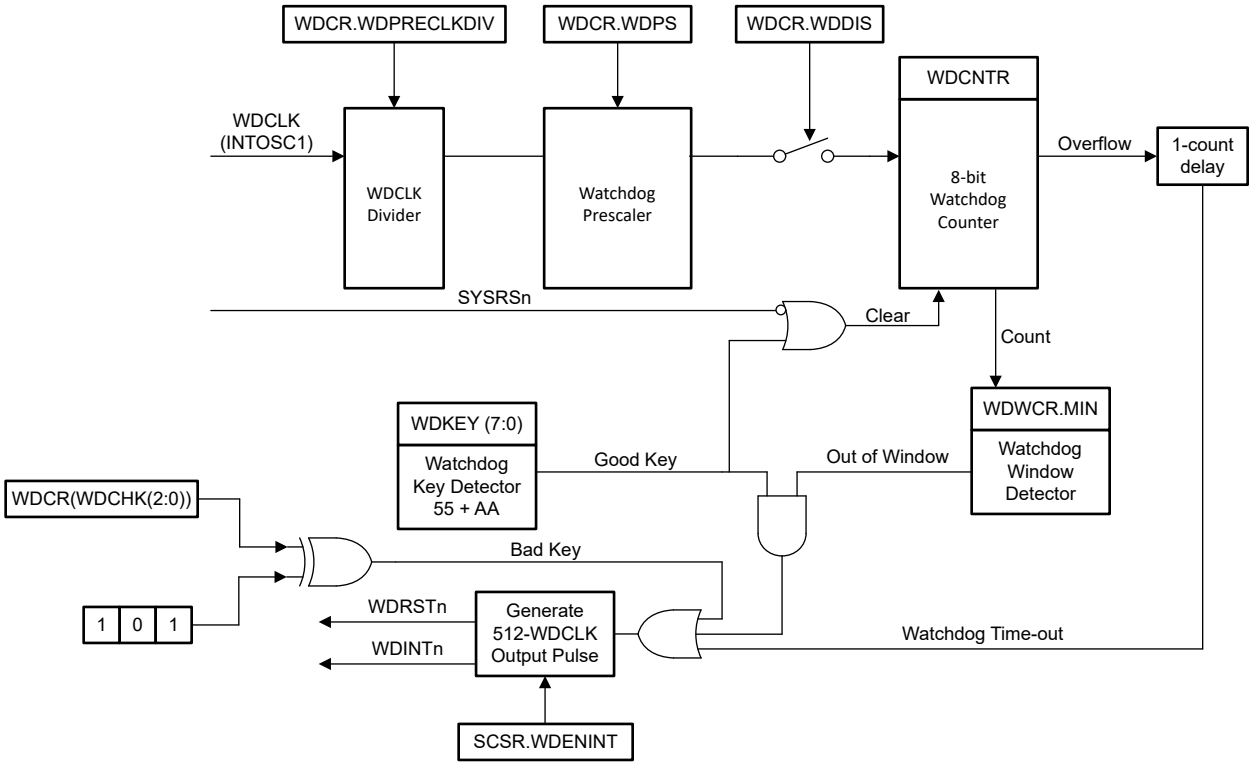

Figure 7-4. Windowed Watchdog

Copyright © 2026 Texas Instruments Incorporated

7.13 C28x Timers

CPU-Timers 0, 1, and 2 are identical 32-bit timers with presettable periods and with 16-bit clock prescaling. The timers have a 32-bit count-down register that generates an interrupt when the counter reaches zero. The counter is decremented at the CPU clock speed divided by the prescale value setting. When the counter reaches zero, it is automatically reloaded with a 32-bit period value.

CPU-Timer 0 is for general use and is connected to the PIE block. CPU-Timer 1 is also for general use and is connected to INT13 of the CPU. CPU-Timer 2 is reserved for TI-RTOS. It is connected to INT14 of the CPU. If TI-RTOS is not being used, CPU-Timer 2 is available for general use.

CPU-Timer 2 can be clocked by any one of the following:

- SYSCLK (default)
- Internal zero-pin oscillator 1 (INTOSC1)
- Internal zero-pin oscillator 2 (INTOSC2)
- X1 (XTAL)

7.14 Dual-Clock Comparator (DCC)

The DCC module is used for evaluating and monitoring the clock input based on a second clock, which can be a more accurate and reliable version. This instrumentation is used to detect faults in clock source or clock structures, thereby enhancing the system's safety metrics.

7.14.1 Features

The DCC has the following features:

- Allows the application to ensure that a fixed ratio is maintained between frequencies of two clock signals.
- Supports the definition of a programmable tolerance window in terms of the number of reference clock cycles.
- Supports continuous monitoring without requiring application intervention.
- Supports a single-sequence mode for spot measurements.
- Allows the selection of a clock source for each of the counters, resulting in several specific use cases.

7.14.2 Mapping of DCCx Clock Source Inputs

Table 7-23. DCCx Clock Source0 Table

DCCxCLKSRC0[3:0]	CLOCK NAME
0x0	XTAL/X1
0x1	INTOSC1
0x2	INTOSC2
0x4	TCK
0x5	CPU1.SYSCLK
0x8	AUXCLKIN
0xC	INPUT XBAR (Output16 of input-xbar)
others	Reserved

Table 7-24. DCCx Clock Source1 Table

DCCxCLKSRC1[4:0]	CLOCK NAME
0x0	PLLRAWCLK
0x2	INTOSC1
0x3	INTOSC2
0x6	CPU1.SYSCLK
0x9	Input XBAR (Output15 of the input-xbar)
0xA	AUXCLKIN
0xB	EPWMCLK
0xC	LSPCLK
0xD	ADCCLK

Copyright © 2026 Texas Instruments Incorporated

Table 7-24. DCCx Clock Source1 Table (continued)

DCCxCLKSRC1[4:0]	CLOCK NAME
0xE	WDCLK
0xF	CAN0BITCLK
others	Reserved

Copyright © 2026 Texas Instruments Incorporated

7.15 Configurable Logic Block (CLB)

The C2000 configurable logic block (CLB) is a collection of blocks that can be interconnected using software to implement custom digital logic functions or enhance existing on-chip peripherals. The CLB is able to enhance existing peripherals through a set of crossbar interconnections, which provide a high level of connectivity to existing control peripherals such as enhanced pulse width modulators (ePWM), enhanced capture modules (eCAP), and enhanced quadrature encoder pulse modules (eQEP). The crossbars also allow the CLB to be connected to external GPIO pins. In this way, the CLB can be configured to interact with device peripherals to perform small logical functions such as comparators, or to implement custom serial data exchange protocols. Through the CLB, functions that would otherwise be accomplished using external logic devices can now be implemented inside the MCU.

The CLB peripheral is configured through the CLB tool. For more information on the CLB tool, available examples, application notes and users guide, please refer to the following location in your C2000Ware for C2000 MCUs package (C2000Ware_2_00_00_03 and higher):

- **C2000WARE_INSTALL_LOCATION\utilities\clb_tool\clb_syscfg\doc**
- *CLB Tool User's Guide*
- *Designing With the C2000™ Configurable Logic Block (CLB)* Application Note
- *How to Migrate Custom Logic From an FPGA/CPLD to C2000™ Microcontrollers* Application Note

The CLB module and its interconnections are shown in Figure 7-5.

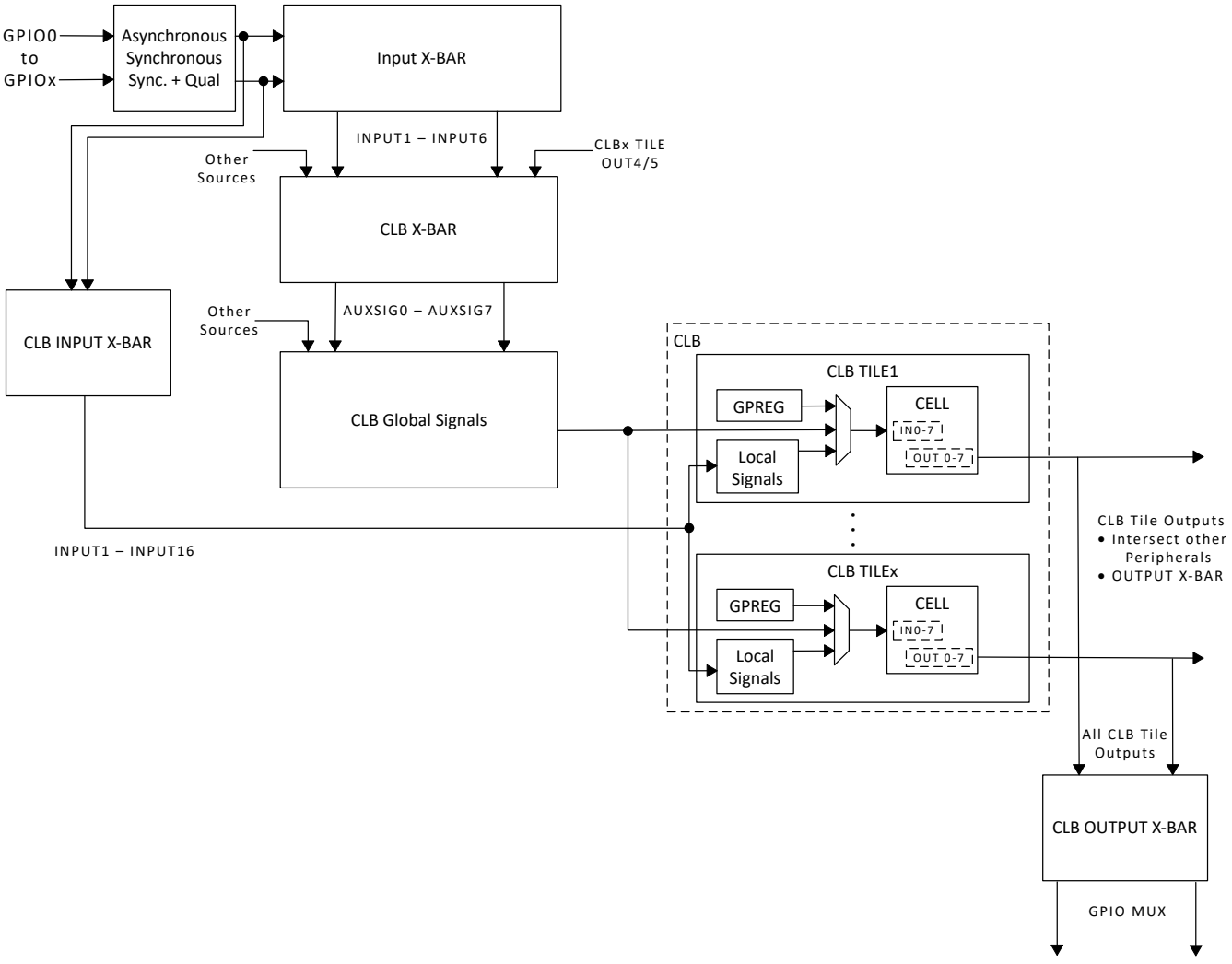

Figure 7-5. GPIO to CLB Tile Connections

Absolute encoder protocol interfaces are now provided as Position Manager solutions in the C2000Ware MotorControl SDK. Configuration files, application programmer interface (API), and use examples for such solutions are provided with C2000Ware MotorControl SDK. In some solutions, the TI-configured CLB is used with other on-chip resources, such as the SPI port or the C28x CPU, to perform more complex functionality.

Copyright © 2026 Texas Instruments Incorporated

8 Functional Safety

Functional Safety-Compliant products are developed using an ISO 26262/IEC 61508-compliant hardware development process that is independently assessed and certified to meet ASIL D/SIL 3 systematic capability (see certificate). The TMS320F28P55x has been certified to meet a component-level random hardware capability of ASIL B and SIL 2 (see certificate).

A functional safety manual that describes all of the hardware and software functional safety mechanisms is available. See the Functional Safety Manual for TMS320F28P55x Real-Time Microcontrollers.

A detailed, tunable, fault-injected, quantitative FMEDA that enables the calculation of random hardware metrics—as outlined in the International Organization for Standardization ISO 26262 and the International Electrotechnical Commission IEC 61508 for automotive and industrial applications, respectively—is also available. This tunable FMEDA must be requested; see the *C2000™ Safety Package for Automotive and Industrial Real-Time Microcontrollers User's Guide*.

- A white paper outlining the value (or benefit) of a tunable FMEDA is available. See the *Functional Safety: A tunable FMEDA for C2000™ MCUs* publication.
- Part 1 and Part 2 of a five-part FMEDA tuning training are available from the TI Video Library. Part 1 is *Basics of FMEDA and how it is useful in system level safety analysis*. Part 2 is *Introduction to the C2000™ Tunable FMEDA*. Parts 3, 4, and 5 are packaged with the tunable FMEDA, and must be requested.

Diagnostic libraries designed for the TMS320F28P55x series of devices are available to aid in the development of functionally safe systems— C28x CPU Self-Test Library (C28x_STL), Control Law Accelerator Self-Test Library (CLA_STL), and Software Diagnostic Library (SDL). The C28x_STL and CLA_STL are developed using the TÜV® SÜD Certified TI internal software development process specification which targets software development flows for baseline quality, automotive quality, and functional safety quality (for functional safety, specifically the target is systematic capability compliance with the IEC 61508 and ISO 26262 standards).

The first in the hierarchy is the C28x_STL which detects permanent faults inside the CPU by implementing a software test of the CPU. The second in the hierarchy is the CLA_STL which can be deployed to detect permanent faults inside the CLA. It is available upon request only, see the *C2000™ Safety Package for Automotive and Industrial Real-Time Microcontrollers User's Guide*

The SDL is a set of reference software providing example implementations of several safety mechanisms described in the device safety manual, such as software tests of SRAMs, software tests of Missing Clock Detect functionality, clock integrity checks using CPU Timers, and several other key features. The SDL is provided as part of C2000Ware.

C2000 real-time MCUs are also equipped with a TI release validation-based C28x and CLA Compiler Qualification Kit (CQKIT), which is available for free and may be requested at the Safety compiler qualification kit web page.

Additional details about how to develop functionally safe systems with C2000 real-time MCUs can be found in the following documents:

- *Automotive Functional Safety for C2000™ Real-Time Microcontrollers* summarizes the available functional safety products, documentation, software, and support available for aiding in the ISO 26262 certification process.
- *Industrial Functional Safety for C2000™ Real-Time Microcontrollers* summarizes the available functional safety products, documentation, software, and support available for aiding in the IEC 61508 certification process.
- *C2000™ Hardware Built-In Self-Test* discusses the Hardware Built-In Self-Test (HWBIST) feature in C2000™ real-time microcontrollers. The HWBIST provides a method of reaching a high level of diagnostic coverage on the C28x CPU, which is often needed to satisfy safety standards.
- *Error Detection in SRAM Application Report* provides technical information about the nature of the SRAM bit cell and bit array, as well as the sources of SRAM failures. It then presents methods for managing memory failures in electronic systems. This discussion is intended for electronic system developers or integrators who are interested in improving the robustness of the embedded SRAM.

Copyright © 2026 Texas Instruments Incorporated

- *C2000™ CPU Memory Built-In Self-Test* describes embedded memory validation using the C28x central processing unit (CPU) during an active control loop. It discusses system challenges to memory validation as well as the different solutions provided by C2000 devices and software. Finally, it presents the applicable Software Diagnostic Library features for memory testing.

Copyright © 2026 Texas Instruments Incorporated

9 Reference Design

The TI Reference Design Library is a robust reference design library spanning analog, embedded processor, and connectivity. Created by TI experts to help you jump start your system design, all reference designs include schematic or block diagrams, BOMs, and design files to speed your time to market. Search and download designs at the Select TI reference designs page.

Below is a partial list of applicable reference designs. A full listing of supported reference designs for this device, as well as other C2000 MCUs, is maintained inside TI resource explorer.

3-kW, 180-W/in3 single-phase totem-pole bridgeless PFC reference design with 16-A max input
This reference design demonstrates a method to control a continuous conduction mode Totem pole power factor correction converter (PFC) using C2000™ microcontrollers. The PFC also works as inverter in grid connected (current controlled) mode. The converter is designed to support a maximum input current of 16-ARMS and peak power of 3.6 kW.

Bidirectional 400-V/12-V DC/DC Converter Reference Design
The Bidirectional 400V-12V DC/DC Converter Reference Design is a microcontroller-based implementation of an isolated bi-directional DC-DC converter. A phase shifted full-bridge (PSFB) with synchronous rectification controls power flow from a 400V bus/battery to the 12V battery in step-down mode, while a push-pull stage controls the reverse power flow from the low voltage battery to the high voltage bus/battery in boost mode.

GaN-based, 6.6-kW, bidirectional, onboard charger reference design
The PMP22650 reference design is a 6.6-kW, bidirectional, onboard charger. The design employs a two-phase totem pole PFC and a full-bridge CLLLC converter with synchronous rectification. The CLLLC utilizes both frequency and phase modulation to regulate the output across the required regulation range.

Bidirectional CLLLC resonant dual active bridge (DAB) reference design for HEV/EV onboard charger
CLLLC resonant DAB with bidirectional power flow capability and soft switching characteristics is an ideal candidate for Hybrid Electric Vehicle/Electric Vehicle (HEV/EV) on-board chargers and energy storage applications. This design illustrates control of this power topology using a C2000™ MCU in closed voltage and closed current-loop mode.

7.4-kW on-board charger reference design with CCM totem pole PFC and CLLLC DC/DC using C2000™ MCU
TIDM-02013 is a bidirectional onboard charger reference design. The design consists of an interleaved continuous conduction mode (CCM) totem-pole (TTPL) bridgeless power-factor correction (PFC) power stage followed by a CLLLC DCDC power stage all controlled using a single C2000™ real-time control microcontroller (MCU), while utilizing a TI gallium nitride (GaN) power module.

48-V Three-Phase Inverter With Shunt-Based In-Line Motor Phase Current Sensing Evaluation Module
The BOOSTXL-3PHGANINV evaluation module features a 48-V/10-A three-phase GaN inverter with precision in-line shunt-based phase current sensing for accurate control of precision drives such as servo drives.

C2000 DesignDRIVE position manager BoosterPack™ plug-in module
The PositionManager BoosterPack is a flexible low voltage platform intended for evaluating interfaces to absolute encoders and analog sensors like resolvers and SinCos transducers. When combined with the DesignDRIVE Position Manager software solutions this low-cost evaluation module becomes a powerful tool for interfacing many popular position encoder types such as EnDat, BiSS and T-format with C2000 Real-Time Control devices. C2000 Position Manager technology integrates interfaces to the most popular digital and analog position sensors onto C2000 Real-Time Controller, thus eliminating the need for external FPGAs for these functions.

Distributed multi-axis servo drive over fast serial interface (FSI) reference design
This reference design presents an example distributed or decentralized multi-axis servo drive over Fast Serial Interface (FSI) using C2000™ real-time controllers. Multi-axis servo drives are used in many applications such as factory automation and robots. The cost per axis, performance and ease of use are always high concerns for such systems. FSI is a cost-optimized and reliable high speed communication interface with low jitter that can daisy-chain multiple C2000 microcontrollers.

Copyright © 2026 Texas Instruments Incorporated

10-kW, bidirectional three-phase three-level (T-type) inverter and PFC reference design

This verified reference design provides an overview on how to implement a three-level three-phase SiC based DC:AC T-type inverter stage. Higher switching frequency of 50KHz reduces the size of magnetics for the filter design and enables higher power density. The use of SiC MOSFETs with switching loss ensures higher DC bus voltages of up to 1000V and lower switching losses with a peak efficiency of 99 percent. This design is configurable to work as a two-level or three-level inverter.

Bi-directional, dual active bridge reference design for level 3 electric vehicle charging stations

This reference design provides an overview on the implementation of a single-phase dual active bridge (DAB) DC/DC converter. DAB topology offers advantages like soft-switching commutations, a decreased number of devices and high efficiency. The design is beneficial where power density, cost, weight, galvanic isolation, high voltage conversion ratio and reliability are critical factors, making it ideal for EV charging stations and energy storage applications. Modularity and symmetrical structure in DAB allow for stacking converters to achieve high power throughput and facilitate a bidirectional mode of operation to support battery charging and discharging applications.

1.6kW, bidirectional micro inverter based on GaN reference design

This reference design shows a four-input bidirectional 1.6kW GaN-based microinverter with energy storage capability.

Copyright © 2026 Texas Instruments Incorporated

10 Device and Documentation Support

TI offers an extensive line of development tools. Tools and software to evaluate the performance of the device, generate code, and develop solutions are listed below.

10.1 Device Nomenclature

To designate the stages in the product development cycle, TI assigns prefixes to the part numbers of all MCU devices and support tools. Each TMS320 ™ MCU commercial family member has one of three prefixes: TMX, TMP, or TMS (for example, **TMS**320F28P559SJ-Q1). Texas Instruments recommends two of three possible prefix designators for its support tools: TMDX and TMDS. These prefixes represent evolutionary stages of product development from engineering prototypes (TMX and TMDX) through fully qualified production devices and tools (TMS and TMDS).

Device development evolutionary flow:

TMX Experimental device that is not necessarily representative of the final device's electrical specifications and may not use production assembly flow.

TMP Prototype device that is not necessarily the final silicon die and may not necessarily meet final electrical specifications.

TMS Production version of the silicon die that is fully qualified.

Support tool development evolutionary flow:

TMDX Development-support product that has not yet completed Texas Instruments internal qualification testing.

TMDS Fully-qualified development-support product.

TMX and TMP devices and TMDX development-support tools are shipped against the following disclaimer:

"Developmental product is intended for internal evaluation purposes."

Production devices and TMDS development-support tools have been characterized fully, and the quality and reliability of the device have been demonstrated fully. TI's standard warranty applies.

Predictions show that prototype devices (X or P) have a greater failure rate than the standard production devices. Texas Instruments recommends that these devices not be used in any production system because their expected end-use failure rate still is undefined. Only qualified production devices are to be used.

TI device nomenclature also includes a suffix with the device family name. This suffix indicates the package type (for example, PZ).

For device part numbers and further ordering information, see the TI website (www.ti.com) or contact your TI sales representative.

Copyright © 2026 Texas Instruments Incorporated

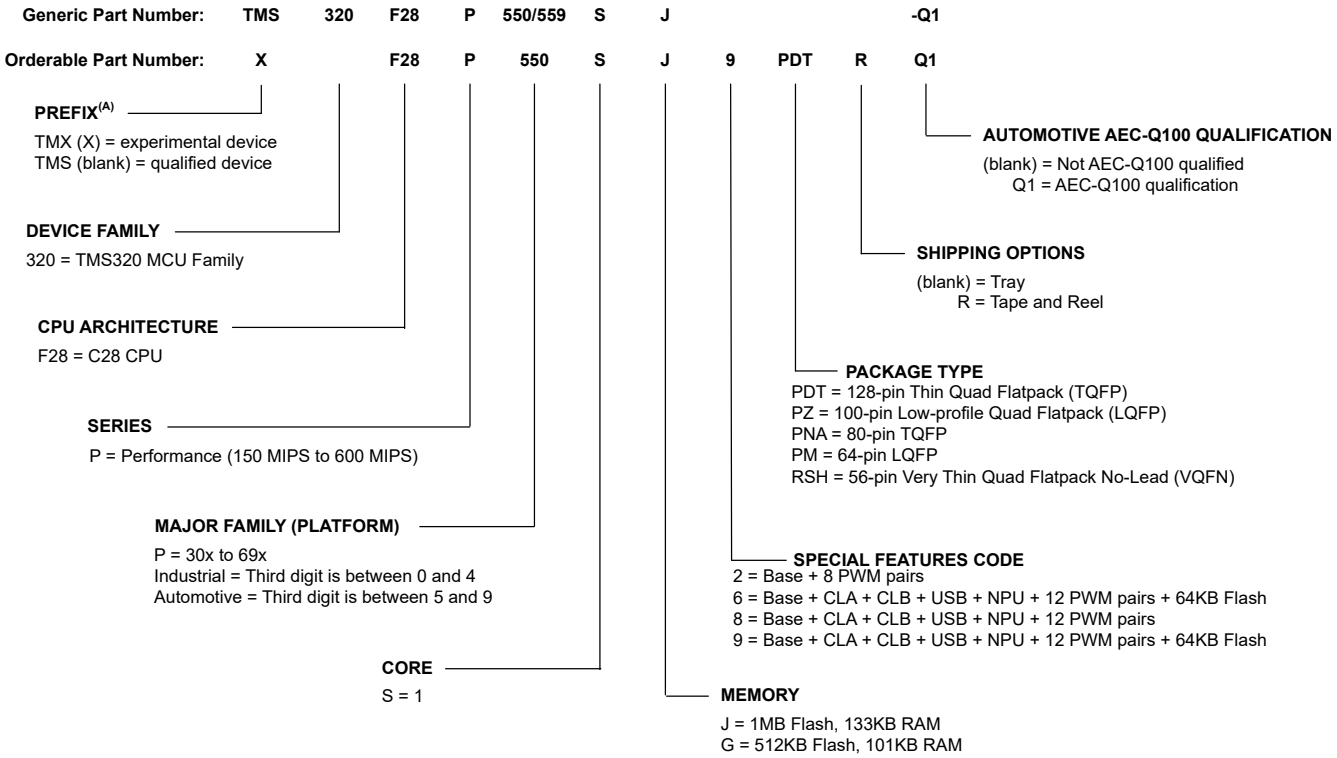

A. Prefix X is used in orderable part numbers.

Figure 10-1. Device Nomenclature

10.2 Markings

Figure 10-2, Figure 10-3, Figure 10-4, Figure 10-5, Figure 10-6, Figure 10-7, Figure 10-8, and Figure 10-9 show the package symbolization. Table 10-1 lists the silicon revision codes.

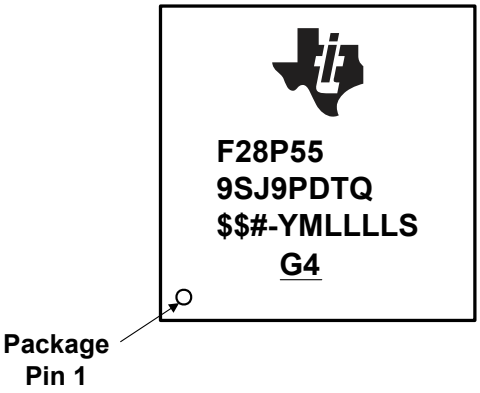

YMLLLLS = Lot Trace Code

YM = 2-digit Year/Month Code
LLLL = Assembly Lot Code
S = Assembly Site Code
$$ = Wafer Fab Code (one or two characters) as applicable
 # = Silicon Revision Code

G4 = Green (Low Halogen and RoHS-compliant)

Figure 10-2. Package Symbolization for PDT Package – Automotive

Copyright © 2026 Texas Instruments Incorporated

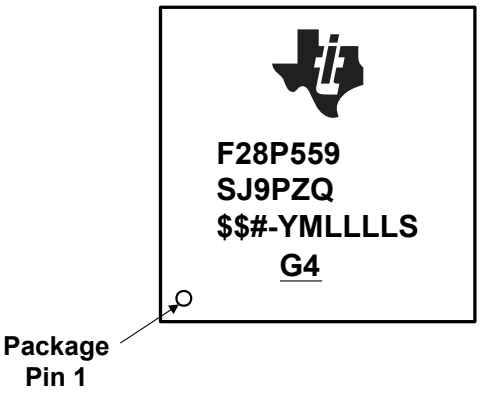

YMLLLLS = Lot Trace Code

YM = 2-digit Year/Month Code
LLLL = Assembly Lot Code
S = Assembly Site Code
$$ = Wafer Fab Code (one or two characters) as applicable
= Silicon Revision Code

G4 = Green (Low Halogen and RoHS-compliant)

Figure 10-3. Package Symbolization for PZ Package – Automotive

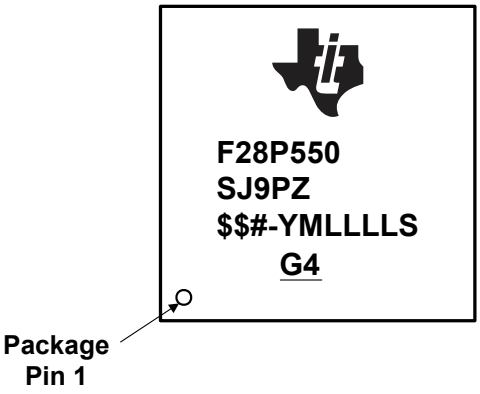

YMLLLLS = Lot Trace Code

YM = 2-digit Year/Month Code
LLLL = Assembly Lot Code
S = Assembly Site Code
$$ = Wafer Fab Code (one or two characters) as applicable
= Silicon Revision Code

G4 = Green (Low Halogen and RoHS-compliant)

Figure 10-4. Package Symbolization for PZ Package – Non-Automotive

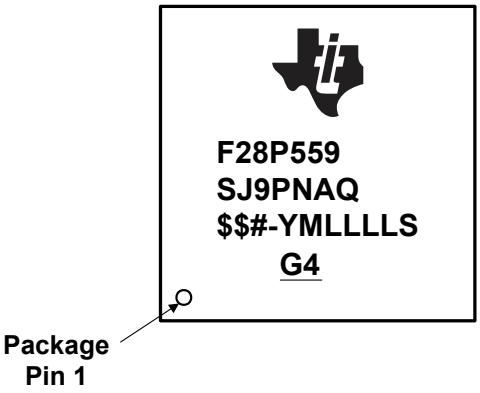

YMLLLLS = Lot Trace Code

YM = 2-digit Year/Month Code
LLLL = Assembly Lot Code
S = Assembly Site Code
$$ = Wafer Fab Code (one or two characters) as applicable
= Silicon Revision Code

G4 = Green (Low Halogen and RoHS-compliant)

Figure 10-5. Package Symbolization for PNA Package – Automotive

Copyright © 2026 Texas Instruments Incorporated

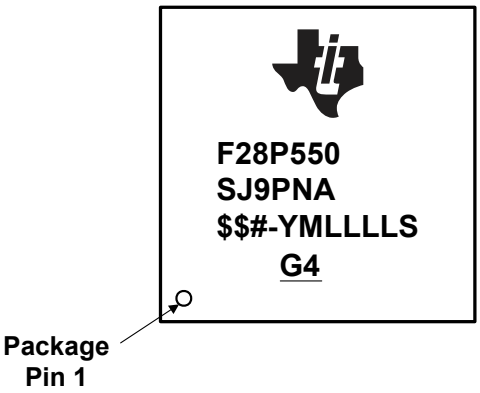

YMLLLLS = Lot Trace Code

YM = 2-digit Year/Month Code
LLLL = Assembly Lot Code
S = Assembly Site Code
$$ = Wafer Fab Code (one or two characters) as applicable
= Silicon Revision Code

G4 = Green (Low Halogen and RoHS-compliant)

Figure 10-6. Package Symbolization for PNA Package – Non-Automotive

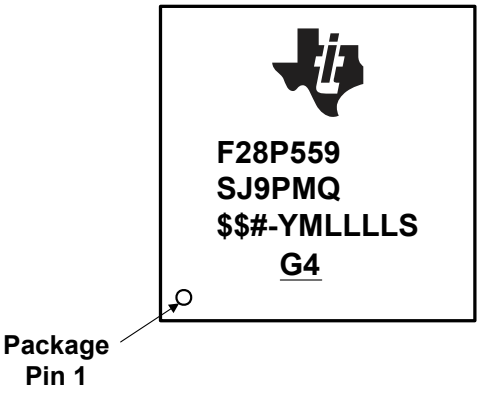

YMLLLLS = Lot Trace Code

YM = 2-digit Year/Month Code
LLLL = Assembly Lot Code
S = Assembly Site Code
$$ = Wafer Fab Code (one or two characters) as applicable
= Silicon Revision Code

G4 = Green (Low Halogen and RoHS-compliant)

Figure 10-7. Package Symbolization for PM Package – Automotive

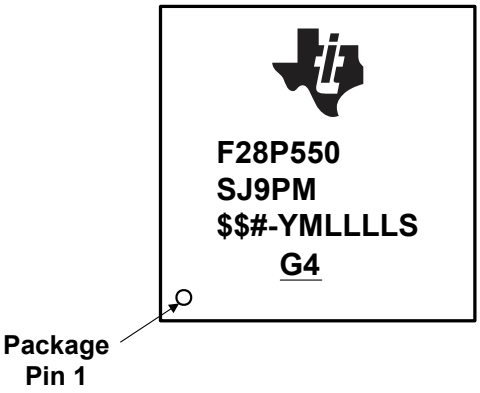

YMLLLLS = Lot Trace Code

YM = 2-digit Year/Month Code
LLLL = Assembly Lot Code
S = Assembly Site Code
$$ = Wafer Fab Code (one or two characters) as applicable
= Silicon Revision Code

G4 = Green (Low Halogen and RoHS-compliant)

Figure 10-8. Package Symbolization for PM Package – Non-Automotive

Copyright © 2026 Texas Instruments Incorporated

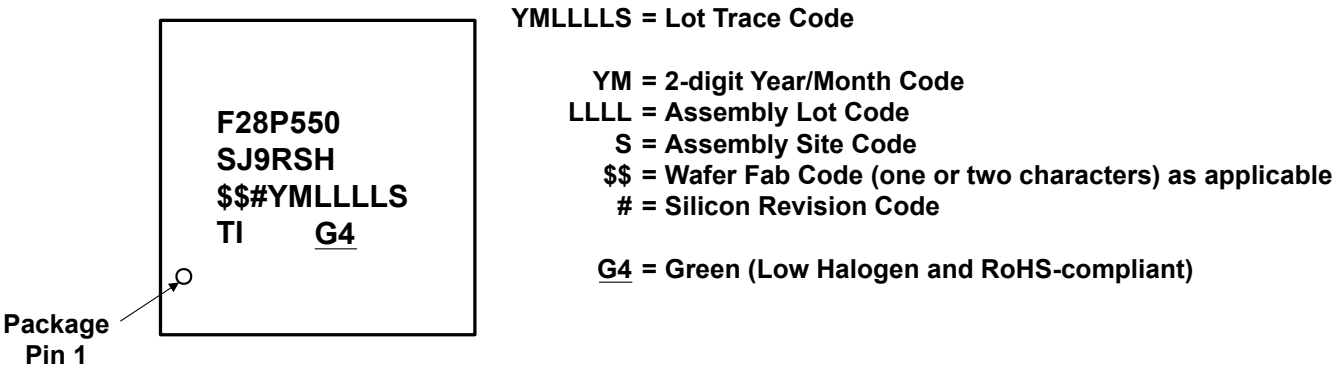

Figure 10-9. Package Symbolization for RSH Package – Non-Automotive

Table 10-1. Revision Identification

SILICON REVISION CODE	SILICON REVISION	REVID(1) ADDRESS: 0x5D00C	COMMENTS
Blank	0	0x0000 0001	This silicon revision is available as TMX.
A	A	0x0000 0002	This silicon revision is available as TMS.

(1) Silicon Revision ID

10.3 Tools and Software

TI offers an extensive line of development tools. Some of the tools and software to evaluate the performance of the device, generate code, and develop solutions follow. To view all available tools and software for C2000™ real-time control MCUs, visit the C2000 real-time control MCUs – Design & development page.

Development Tools

TI Resource Explorer
To enhance your experience, be sure to check out the TI Resource Explorer to browse examples, libraries, and documentation for your applications.

Software Tools

C2000Ware for C2000 MCUs
C2000Ware for C2000™ MCUs is a cohesive set of software and documentation created to minimize development time. It includes device-specific drivers, libraries, and peripheral examples.

DigitalPower SDK
DigitalPower SDK is a cohesive set of software infrastructure, tools, and documentation designed to minimize C2000 MCU-based digital power system development time targeted for various AC-DC, DC-DC and DC-AC power supply applications. The software includes firmware that runs on C2000 digital power evaluation modules (EVMs) and TI designs (TIDs), which are targeted for solar, telecom, server, electric vehicle chargers and industrial power delivery applications. DigitalPower SDK provides all the needed resources at every stage of development and evaluation in a digital power applications.

MotorControl SDK
MotorControl SDK is a cohesive set of software infrastructure, tools, and documentation designed to minimize C2000 MCU-based motor control system development time targeted for various three-phase motor control applications. The software includes firmware that runs on C2000 motor control evaluation modules (EVMs) and TI designs (TIDs), which are targeted for industrial drive and other motor control, MotorControl SDK provides all the needed resources at every stage of development and evaluation for high-performance motor control applications.

Code Composer Studio™ integrated development environment (IDE)
Code Composer Studio is an integrated development environment (IDE) for TI's microcontrollers and processors. It comprises a suite of tools used to develop and debug embedded applications. Code Composer

Copyright © 2026 Texas Instruments Incorporated

Studio is available for download across Windows®, Linux® and macOS® desktops. It can also be used in the cloud by visiting https://dev.ti.com. Code Composer Studio includes an optimizing C/C++ compiler, source code editor, project build environment, debugger, profiler and many other features. The intuitive IDE takes you through each step of the application development flow. Familiar tools and interfaces make getting started faster than ever before. The desktop version of Code Composer Studio combines the advantages of the Eclipse software framework with advanced capabilities from TI resulting in a compelling feature-rich environment. The cloud-based Code Composer Studio leverages the Theia application framework enabling development in the cloud without needing to download and install large amounts of software.

SysConfig System configuration tool
SysConfig is a comprehensive collection of graphical utilities for configuring pins, peripherals, radios, subsystems, and other components. SysConfig helps you manage, expose and resolve conflicts visually so that you have more time to create differentiated applications. The tool's output includes C header and code files that can be used with software development kit (SDK) examples or used to configure custom software. The SysConfig tool automatically selects the pinmux settings that satisfy the entered requirements. The SysConfig tool is delivered integrated in CCS, as a standalone installer, or can be used via the dev.ti.com cloud tools portal. For more information about the SysConfig system configuration tool, visit the System configuration tool page.

C2000 Third-party search tool
TI has partnered with multiple companies to offer a wide range of solutions and services for TI C2000 devices. These companies can accelerate your path to production using C2000 devices. Download this search tool to quickly browse third-party details and find the right third-party to meet your needs.

UniFlash Standalone Flash Tool
UniFlash is a standalone tool used to program on-chip flash memory through a GUI, command line, or scripting interface.

Models

Various models are available for download from the product Design & development pages. These models include I/O Buffer Information Specification (IBIS) Models and Boundary-Scan Description Language (BSDL) Models. To view all available models, visit the *Design tools & simulation* section of the *Design & development* page for each device.

Training

To help assist design engineers in taking full advantage of the C2000 microcontroller features and performance, TI has developed a variety of training resources. Utilizing the online training materials and downloadable hands-on workshops provides an easy means for gaining a complete working knowledge of the C2000 microcontroller family. These training resources have been designed to decrease the learning curve, while reducing development time, and accelerating product time to market. For more information on the various training resources, visit the C2000™ real-time control MCUs – Support & training site.

10.4 Documentation Support

To receive notification of documentation updates, navigate to the device product folder on ti.com. Click on *Notifications* to register and receive a weekly digest of any product information that has changed. For change details, review the revision history included in any revised document.

The current documentation that describes the processor, related peripherals, and other technical collateral follows.

Note

TI is transitioning to use more inclusive terminology. Some language may be different than what you would expect to see for certain technology areas.

Copyright © 2026 Texas Instruments Incorporated

Errata

TMS320F28P55x Real-Time MCUs Silicon Errata describes known advisories on silicon and provides workarounds.

Technical Reference Manual

TMS320F28P55x Real-Time Microcontrollers Technical Reference Manual details the integration, the environment, the functional description, and the programming models for each peripheral and subsystem in the F28P55x real-time microcontrollers.

CPU User's Guides

TMS320C28x CPU and Instruction Set Reference Guide describes the central processing unit (CPU) and the assembly language instructions of the TMS320C28x fixed-point digital signal processors (DSPs). This Reference Guide also describes emulation features available on these DSPs.

TMS320C28x Extended Instruction Sets Technical Reference Manual describes the architecture, pipeline, and instruction set of the TMU, VCU-II, and FPU accelerators.

Peripheral Guides

C2000 Real-Time Microcontrollers Peripherals Reference Guide describes all the peripherals available for TMS320x28x and F29x devices. This reference guide shows the peripherals used by each device and provides descriptions of the peripherals.

Tools Guides

TMS320C28x Assembly Language Tools v22.6.0.LTS User's Guide describes the assembly language tools (assembler and other tools used to develop assembly language code), assembler directives, macros, common object file format, and symbolic debugging directives for the TMS320C28x device.

TMS320C28x Optimizing C/C++ Compiler v22.6.0.LTS User's Guide describes the TMS320C28x C/C++ compiler. This compiler accepts ANSI standard C/C++ source code and produces TMS320 DSP assembly language source code for the TMS320C28x device.

Functional Safety Manual

Functional Safety Manual for TMS320F28P55x Real-Time Microcontrollers is the Functional Safety Manual for the TMS320F28P55x MCU series from Texas Instruments which is part of the high performance C2000™ real-time microcontroller product line. The C2000 product line utilizes a common safety architecture that is implemented for multiple products in automotive and industrial applications. This Functional Safety Manual is part of the Functional Safety-Compliant design package to aid customers who are designing systems in compliance with ISO26262 or IEC61508 functional safety standards.

Application Notes

The SMT & packaging application notes website lists documentation on TI's surface mount technology (SMT) and application notes on a variety of packaging-related topics.

Semiconductor Packing Methodology describes the packing methodologies employed to prepare semiconductor devices for shipment to end users.

Calculating Useful Lifetimes of Embedded Processors provides a methodology for calculating the useful lifetime of TI embedded processors (EPs) under power when used in electronic systems. It is aimed at general engineers who wish to determine if the reliability of the TI EP meets the end system reliability requirement.

An Introduction to IBIS (I/O Buffer Information Specification) Modeling discusses various aspects of IBIS including its history, advantages, compatibility, model generation flow, data requirements in modeling the input/output structures, and future trends.

Serial Flash Programming of C2000™ Microcontrollers discusses using a flash kernel and ROM loaders for serial programming a device.

Copyright © 2026 Texas Instruments Incorporated

The Essential Guide for Developing With C2000™ Real-Time Microcontrollers provides a deeper look into the components that differentiate the C2000 Microcontroller Unit (MCU) as it pertains to Real-Time Control Systems.

Migrating Software From 8-Bit (Byte) Addressable CPUs to C28x CPU discusses common scenarios of migrating software from 8-bit (byte) addressable CPUs to C28x CPU, and provides a guide on how to develop application irrespective of the addressability.

The *Hardware Design Guide for F2800x C2000™ Real-Time MCU Series Application Note* is an essential guide for hardware developers using C2000 devices, and helps to streamline the design process while mitigating the potential for faulty designs. Key topics discussed include: power requirements; general-purpose input/output (GPIO) connections; analog inputs and ADC; clocking generation and requirements; and JTAG debugging among many others.

10.5 Support Resources

TI E2E™ support forums are an engineer's go-to source for fast, verified answers and design help — straight from the experts. Search existing answers or ask your own question to get the quick design help you need.

Linked content is provided "AS IS" by the respective contributors. They do not constitute TI specifications and do not necessarily reflect TI's views; see TI's Terms of Use.

10.6 Trademarks

C2000™, TMS320C2000™, Code Composer Studio™, and TI E2E™ are trademarks of Texas Instruments.
Windows® is a registered trademark of Microsoft Corporation.
Linux® is a registered trademark of Linus Torvalds.
macOS® is a registered trademark of Apple Inc.
All trademarks are the property of their respective owners.

10.7 Electrostatic Discharge Caution



This integrated circuit can be damaged by ESD. Texas Instruments recommends that all integrated circuits be handled with appropriate precautions. Failure to observe proper handling and installation procedures can cause damage.

ESD damage can range from subtle performance degradation to complete device failure. Precision integrated circuits may be more susceptible to damage because very small parametric changes could cause the device not to meet its published specifications.

10.8 Glossary

TI Glossary	This glossary lists and explains terms, acronyms, and definitions.

Copyright © 2026 Texas Instruments Incorporated

11 Revision History

Changes from June 26, 2025 to February 28, 2026	Page
• Changing NPU to TinyEngine NPU	1
• Changed NPU to TinyEngine NPU	3
• Added separate rows for the 3 unique voltage ranges of leakage current. Added Typical values and revised the max numbers to match the new rows	79
• Corrected CMPSS Mux Selection Table Moved B0/C11 from mux HP/LP3 to HP/LP4 for CMPSS2	126
• Corrected CMPSS for B0/C11 on 100-pin package. Was assigned to CMPSS HP/LP3, moved to HP/LP4	131
• Added InternalTest Signal to the internal connections table	131
• In ADC timing description removed row and reference to TDAEN	151
• Revised Full Scale Step Response upward based on characterization data. G>64 should be larger than other gains	166
• Revised settling time upward based on characterization data. G<64 will be smaller settling time vs G=64	166
• *eCAP Block Diagram*: Updated diagram to remove HRCAP	176
• Changed NPU to TinyEngineNPU	210
• *Functional Safety* section: Added section.	245

Copyright © 2026 Texas Instruments Incorporated

12 Mechanical, Packaging, and Orderable Information

The following pages include mechanical, packaging, and orderable information. This information is the most current data available for the designated devices. This data is subject to change without notice and revision of this document. For browser-based versions of this data sheet, refer to the left-hand navigation.

Copyright © 2026 Texas Instruments Incorporated

PACKAGE OUTLINE

RSH0056G

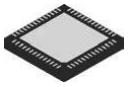

VQFN - 1 mm max height

PLASTIC QUAD FLATPACK - NO LEAD

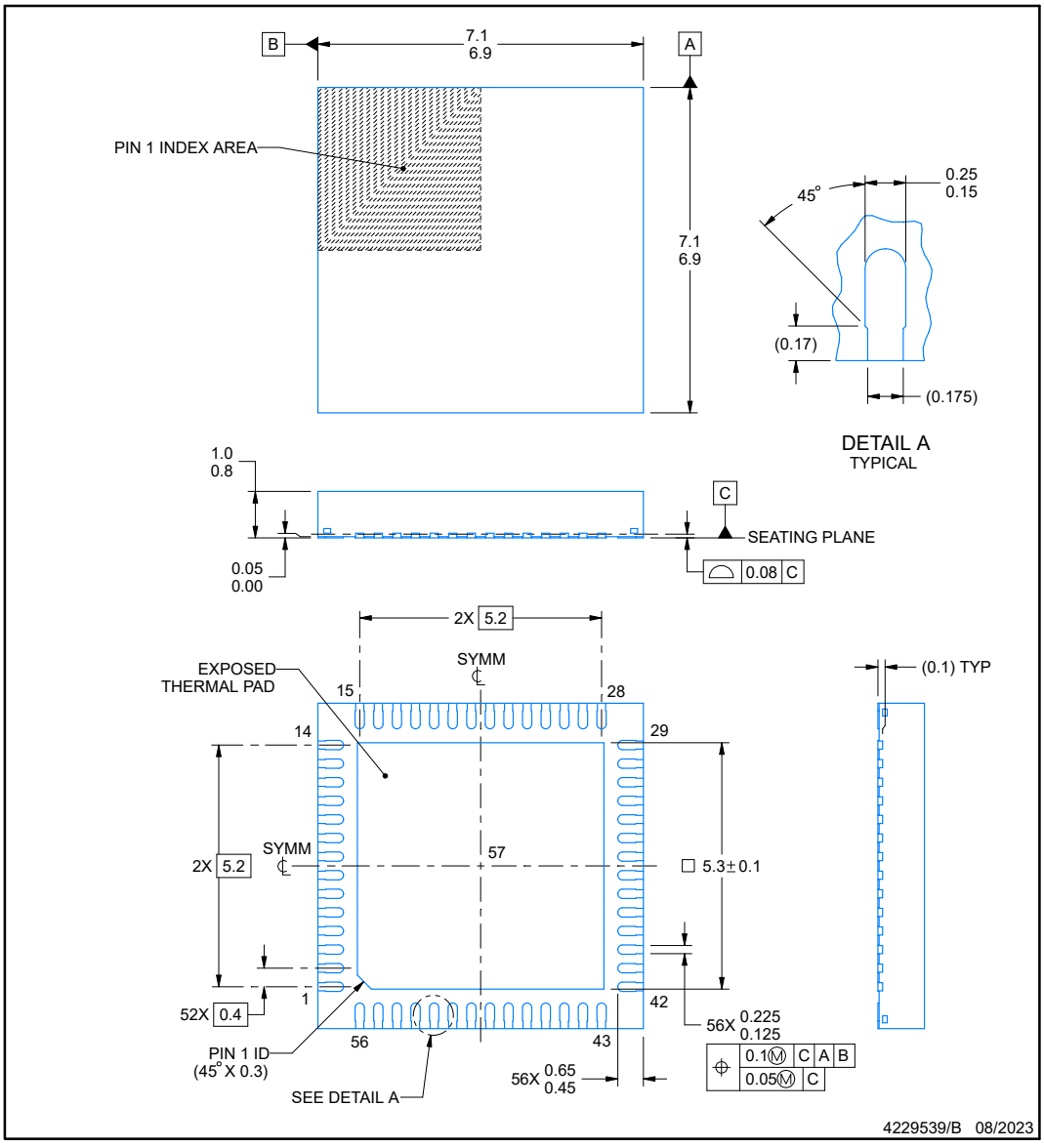

NOTES:

1. All linear dimensions are in millimeters. Any dimensions in parenthesis are for reference only. Dimensioning and tolerancing per ASME Y14.5M.
2. This drawing is subject to change without notice.
3. The package thermal pad must be soldered to the printed circuit board for thermal and mechanical performance.

Copyright © 2026 Texas Instruments Incorporated

EXAMPLE BOARD LAYOUT

RSH0056G — **VQFN - 1 mm max height**

PLASTIC QUAD FLATPACK - NO LEAD

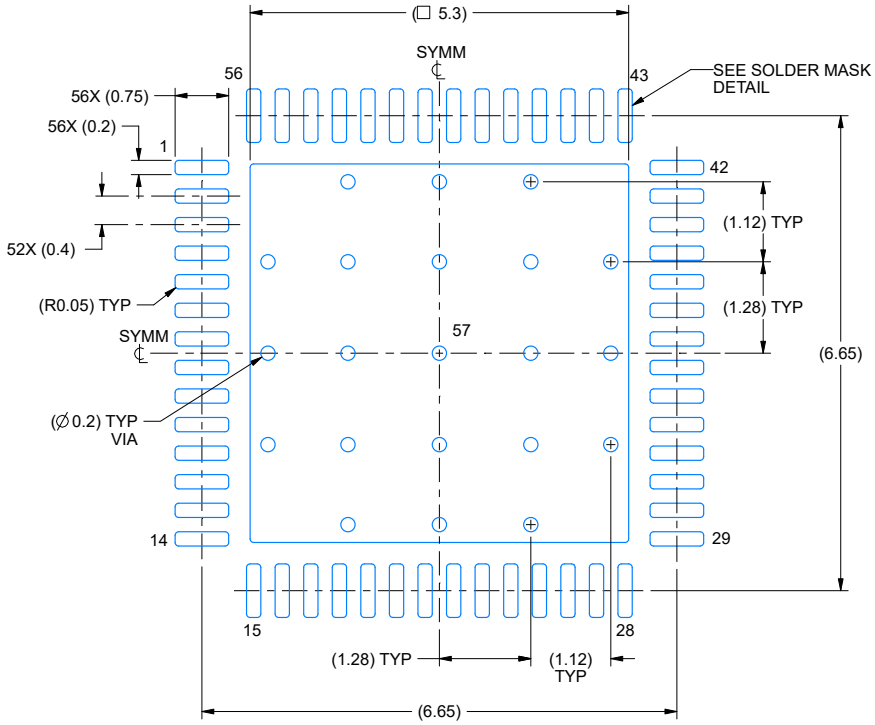

LAND PATTERN EXAMPLE
EXPOSED METAL SHOWN
SCALE: 12X

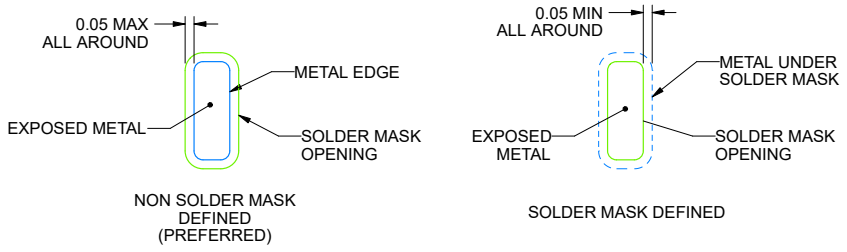

SOLDER MASK DETAILS

4229539/B 08/2023

NOTES: (continued)

4. This package is designed to be soldered to a thermal pad on the board. For more information, see Texas Instruments literature number SLUA271 (www.ti.com/lit/slua271).
5. Vias are optional depending on application, refer to device data sheet. If any vias are implemented, refer to their locations shown on this view. It is recommended that vias under paste be filled, plugged or tented.

Copyright © 2026 Texas Instruments Incorporated

EXAMPLE STENCIL DESIGN

RSH0056G — **VQFN - 1 mm max height**

PLASTIC QUAD FLATPACK - NO LEAD

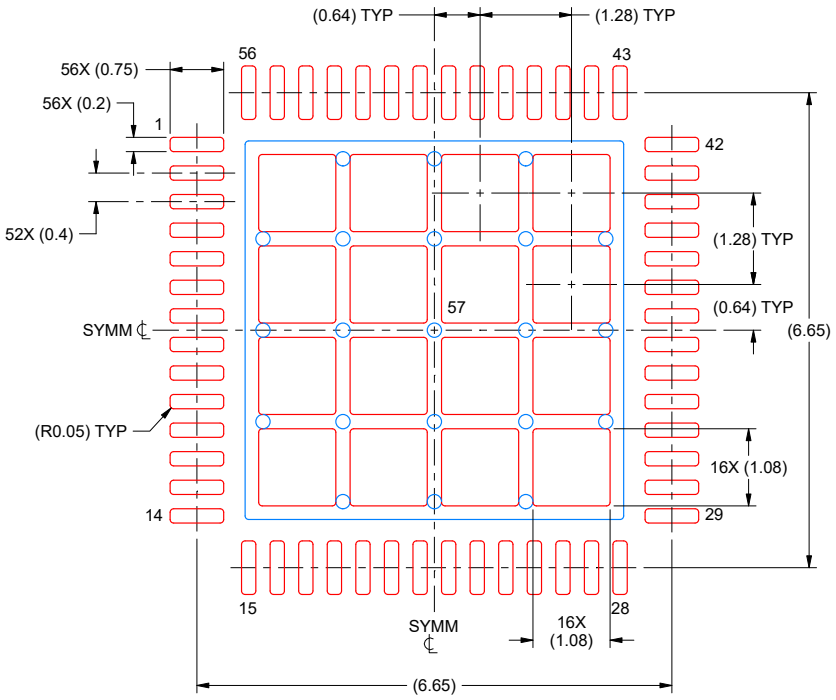

SOLDER PASTE EXAMPLE
BASED ON 0.100 MM THICK STENCIL
SCALE: 12X

EXPOSED PAD 57
66% PRINTED SOLDER COVERAGE BY AREA UNDER PACKAGE

4229539/B 08/2023

NOTES: (continued)

6. Laser cutting apertures with trapezoidal walls and rounded corners may offer better paste release. IPC-7525 may have alternate design recommendations.

Copyright © 2026 Texas Instruments Incorporated

PACKAGE OUTLINE

YAF0049-C02

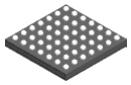

DSBGA - 0.55 mm max height

DIE SIZE BALL GRID ARRAY

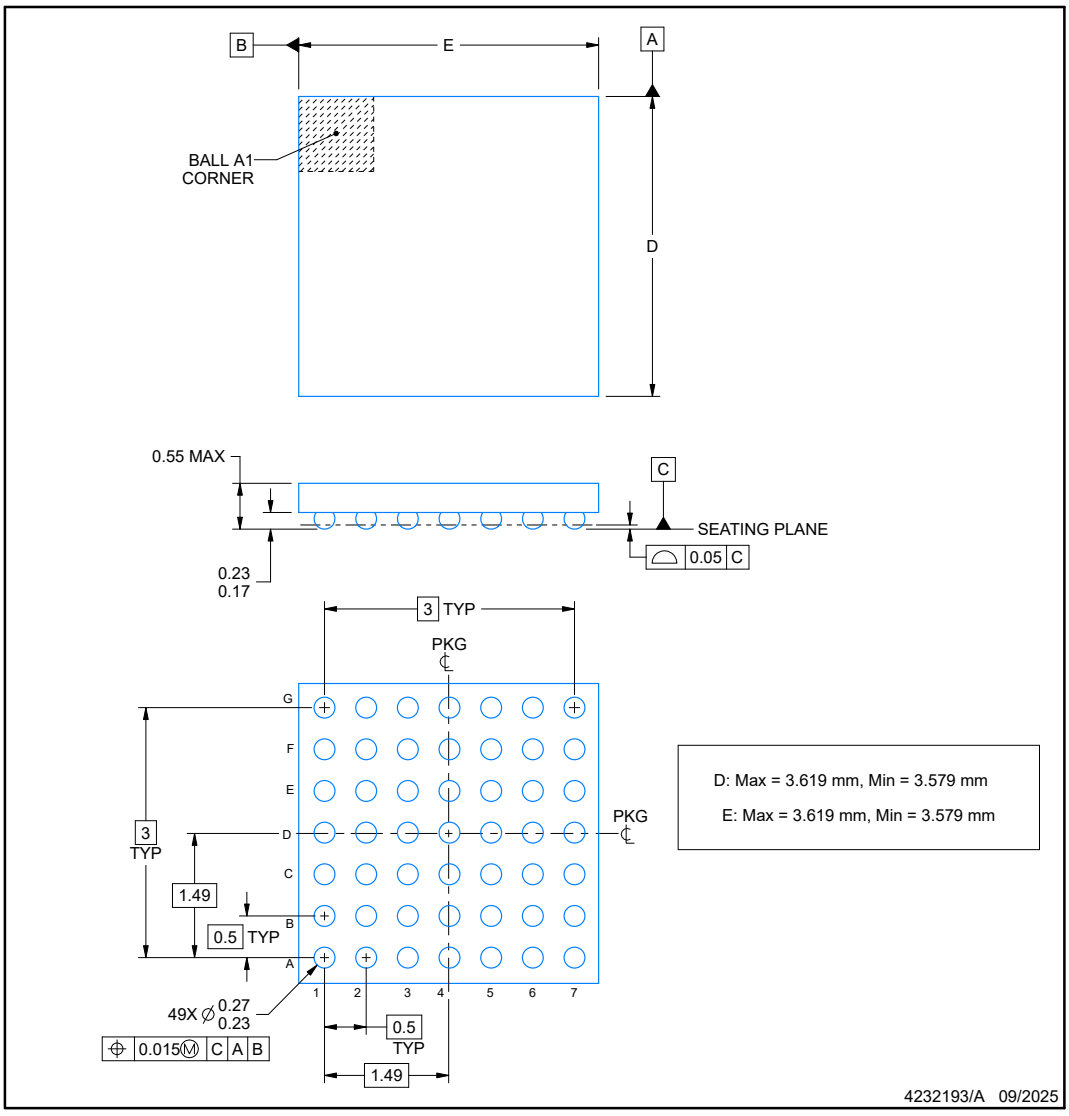

NOTES:

1. All linear dimensions are in millimeters. Any dimensions in parenthesis are for reference only. Dimensioning and tolerancing per ASME Y14.5M.
2. This drawing is subject to change without notice.

Copyright © 2026 Texas Instruments Incorporated

EXAMPLE BOARD LAYOUT

YAF0049-C02

DSBGA - 0.55 mm max height

DIE SIZE BALL GRID ARRAY

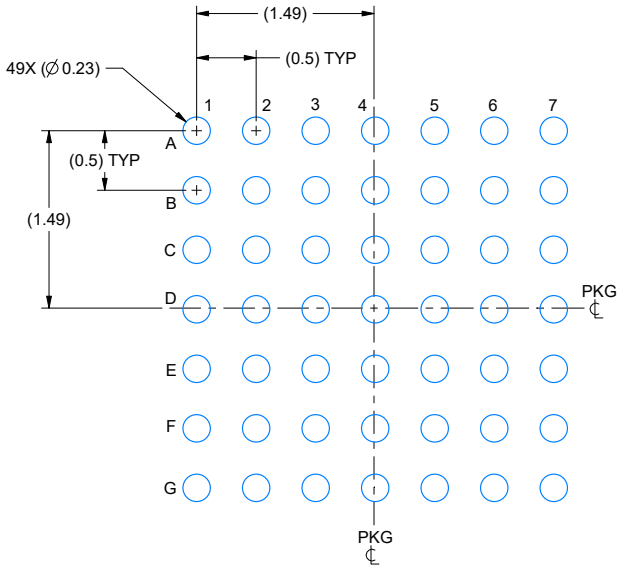

LAND PATTERN EXAMPLE
EXPOSED METAL SHOWN
SCALE: 20X

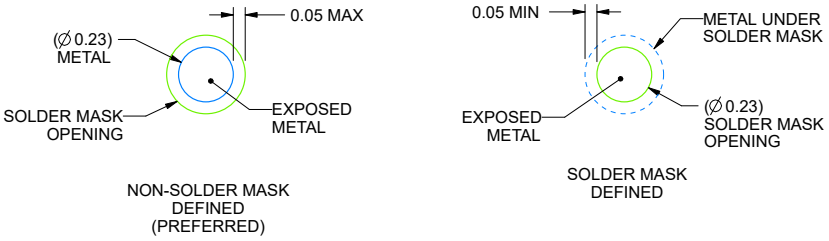

SOLDER MASK DETAILS
NOT TO SCALE

4232193/A 09/2025

NOTES: (continued)

3. Final dimensions may vary due to manufacturing tolerance considerations and also routing constraints.
   See Texas Instruments Literature No. SNVA009 (www.ti.com/lit/snva009).

Copyright © 2026 Texas Instruments Incorporated

EXAMPLE STENCIL DESIGN

YAF0049-C02 — **DSBGA - 0.55 mm max height**

DIE SIZE BALL GRID ARRAY

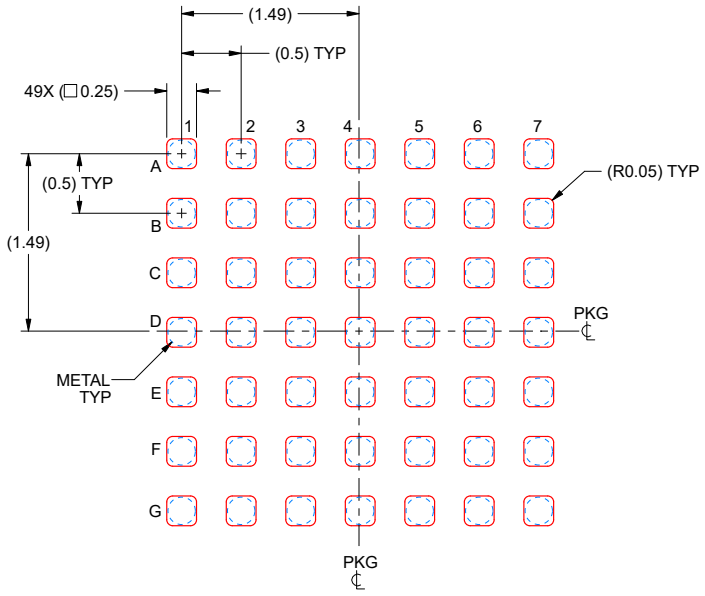

SOLDER PASTE EXAMPLE
BASED ON 0.1 mm THICK STENCIL
SCALE: 20X

4232193/A 09/2025

NOTES: (continued)

4. Laser cutting apertures with trapezoidal walls and rounded corners may offer better paste release.

Copyright © 2026 Texas Instruments Incorporated

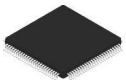

PACKAGE OUTLINE

PZ0100A

LQFP - 1.6 mm max height

PLASTIC QUAD FLATPACK

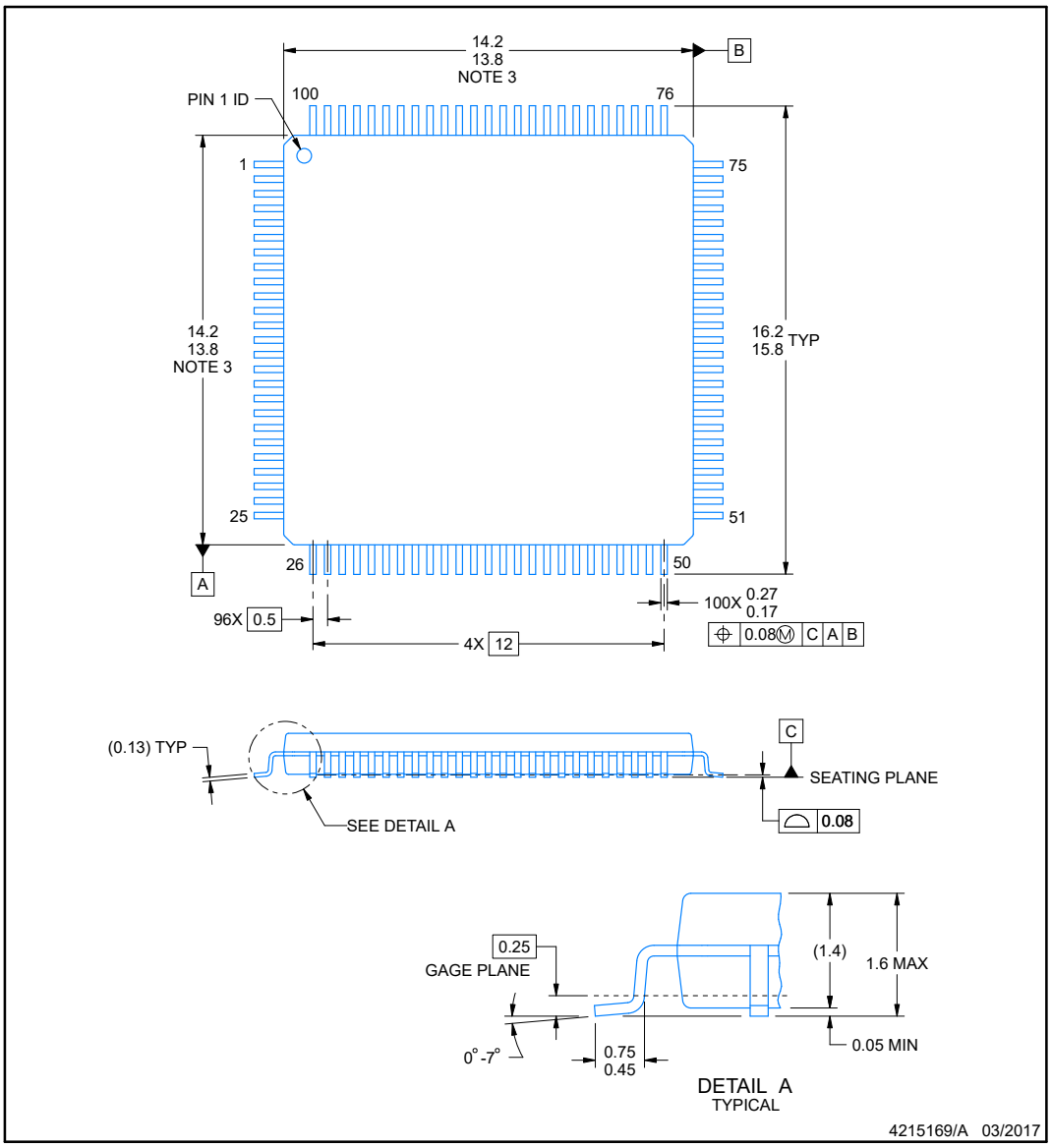

NOTES:

1. All linear dimensions are in millimeters. Any dimensions in parenthesis are for reference only. Dimensioning and tolerancing per ASME Y14.5M.
2. This drawing is subject to change without notice.
3. This dimension does not include mold flash, protrusions, or gate burrs. Mold flash, protrusions, or gate burrs shall not exceed 0.15 mm per side.
4. Reference JEDEC registration MS-026.

Copyright © 2026 Texas Instruments Incorporated

EXAMPLE BOARD LAYOUT

PZ0100A

LQFP - 1.6 mm max height

PLASTIC QUAD FLATPACK

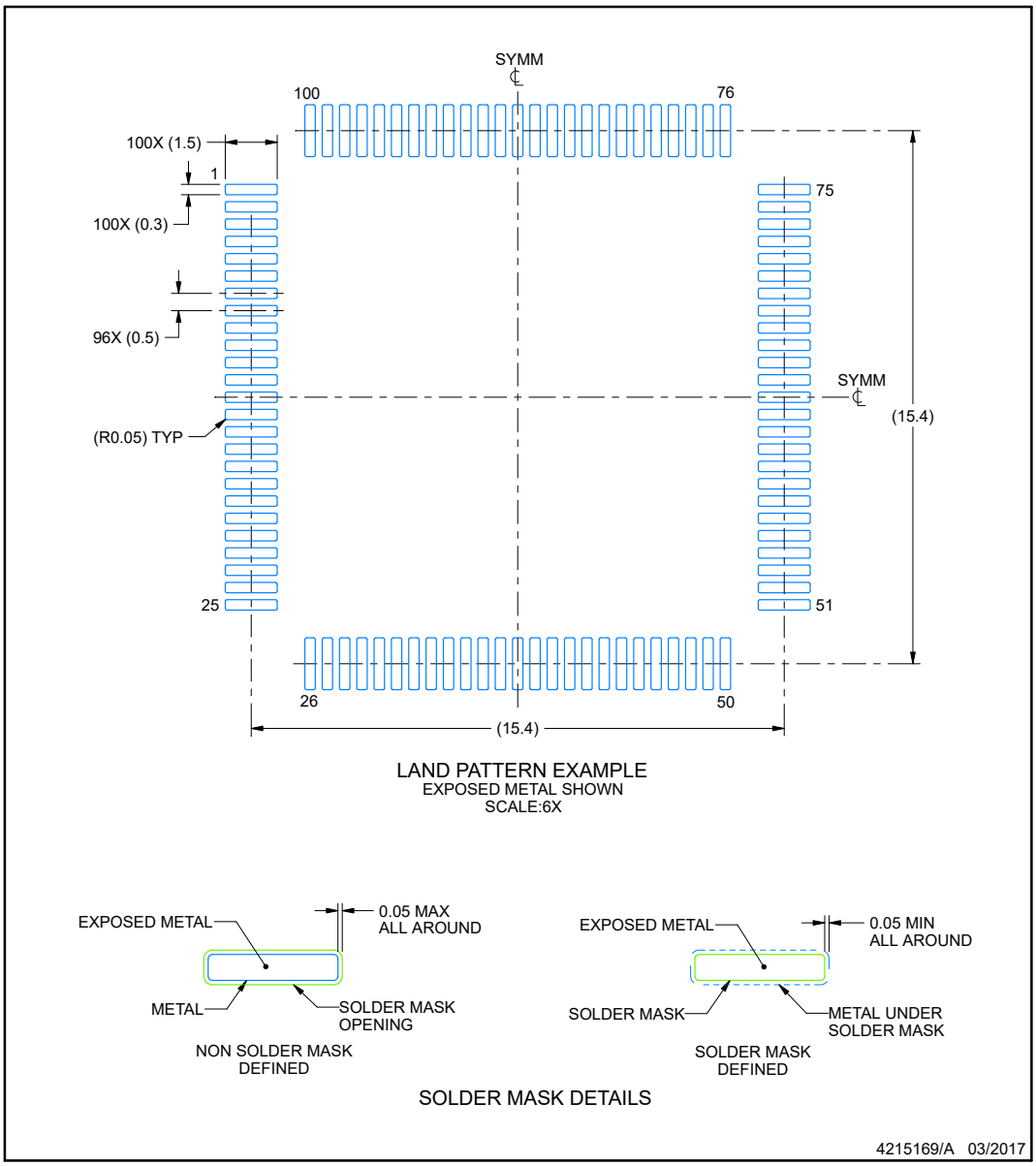

NOTES: (continued)

5. Publication IPC-7351 may have alternate designs.
6. Solder mask tolerances between and around signal pads can vary based on board fabrication site.
7. For more information, see Texas Instruments literature number SLMA004 (www.ti.com/lit/slma004).

Copyright © 2026 Texas Instruments Incorporated

EXAMPLE STENCIL DESIGN

PZ0100A — **LQFP - 1.6 mm max height**

PLASTIC QUAD FLATPACK

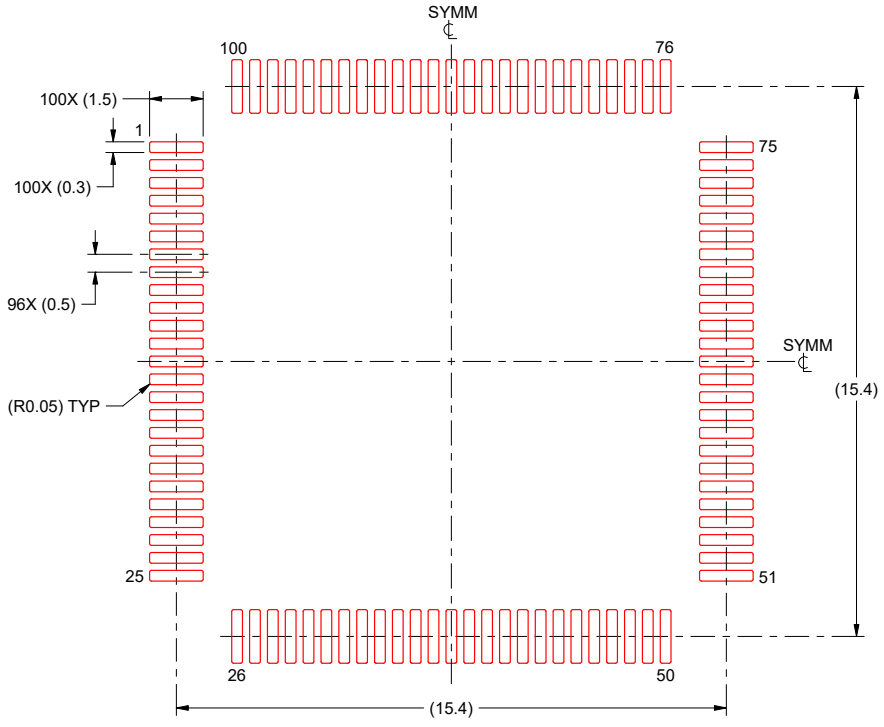

SOLDER PASTE EXAMPLE
BASED ON 0.125 mm THICK STENCIL
SCALE:6X

4215169/A 03/2017

NOTES: (continued)

8. Laser cutting apertures with trapezoidal walls and rounded corners may offer better paste release. IPC-7525 may have alternate design recommendations.
9. Board assembly site may have different recommendations for stencil design.

Copyright © 2026 Texas Instruments Incorporated

PACKAGING INFORMATION

Orderable part number	Status (1)	Material type (2)	Package | Pins	Package qty | Carrier	RoHS (3)	Lead finish/ Ball material (4)	MSL rating/ Peak reflow (5)	Op temp (°C)	Part marking (6)
F28P550SG8PMR	Active	Production	LQFP (PM) | 64	1000 | LARGE T&R	Yes	NIPDAU	Level-3-260C-168 HR	-40 to 150	SG8PM F28P550
F28P550SG8PMR.A	Active	Production	LQFP (PM) | 64	1000 | LARGE T&R	Yes	NIPDAU	Level-3-260C-168 HR	-40 to 150	SG8PM F28P550
F28P550SG8PNAR	Active	Production	TQFP (PNA) | 80	1000 | LARGE T&R	Yes	NIPDAU	Level-3-260C-168 HR	-40 to 150	SG8PNA F28P550
F28P550SG8PNAR.A	Active	Production	TQFP (PNA) | 80	1000 | LARGE T&R	Yes	NIPDAU	Level-3-260C-168 HR	-40 to 150	SG8PNA F28P550
F28P550SG8PZR	Active	Production	LQFP (PZ) | 100	1000 | LARGE T&R	Yes	NIPDAU	Level-3-260C-168 HR	-40 to 150	F28P550 SG8PZ
F28P550SG8PZR.A	Active	Production	LQFP (PZ) | 100	1000 | LARGE T&R	Yes	NIPDAU	Level-3-260C-168 HR	-40 to 150	F28P550 SG8PZ
F28P550SG8RSHR	Active	Production	VQFN (RSH) | 56	4000 | LARGE T&R	Yes	NIPDAU	Level-3-260C-168 HR	-40 to 150	F28P550 SG8RSH
F28P550SG8RSHR.A	Active	Production	VQFN (RSH) | 56	4000 | LARGE T&R	Yes	NIPDAU	Level-3-260C-168 HR	-40 to 150	F28P550 SG8RSH
F28P550SG9PDTR	Active	Production	TQFP (PDT) | 128	1000 | LARGE T&R	Yes	NIPDAU	Level-3-260C-168 HR	-40 to 150	F28P550 SG9PDT
F28P550SG9PDTR.A	Active	Production	TQFP (PDT) | 128	1000 | LARGE T&R	Yes	NIPDAU	Level-3-260C-168 HR	-40 to 150	F28P550 SG9PDT
F28P550SG9PMR	Active	Production	LQFP (PM) | 64	1000 | LARGE T&R	Yes	NIPDAU	Level-3-260C-168 HR	-40 to 150	SG9PM F28P550
F28P550SG9PMR.A	Active	Production	LQFP (PM) | 64	1000 | LARGE T&R	Yes	NIPDAU	Level-3-260C-168 HR	-40 to 150	SG9PM F28P550
F28P550SG9PNAR	Active	Production	TQFP (PNA) | 80	1000 | LARGE T&R	Yes	NIPDAU	Level-3-260C-168 HR	-40 to 150	SG9PNA F28P550
F28P550SG9PNAR.A	Active	Production	TQFP (PNA) | 80	1000 | LARGE T&R	Yes	NIPDAU	Level-3-260C-168 HR	-40 to 150	SG9PNA F28P550
F28P550SG9PZR	Active	Production	LQFP (PZ) | 100	1000 | LARGE T&R	Yes	NIPDAU	Level-3-260C-168 HR	-40 to 150	F28P550 SG9PZ
F28P550SG9PZR.A	Active	Production	LQFP (PZ) | 100	1000 | LARGE T&R	Yes	NIPDAU	Level-3-260C-168 HR	-40 to 150	F28P550 SG9PZ

Orderable part number	Status (1)	Material type (2)	Package | Pins	Package qty | Carrier	RoHS (3)	Lead finish/ Ball material (4)	MSL rating/ Peak reflow (5)	Op temp (°C)	Part marking (6)
F28P550SG9RSHR	Active	Production	VQFN (RSH) | 56	4000 | LARGE T&R	Yes	NIPDAU	Level-3-260C-168 HR	-40 to 150	F28P550 SG9RSH
F28P550SG9RSHR.A	Active	Production	VQFN (RSH) | 56	4000 | LARGE T&R	Yes	NIPDAU	Level-3-260C-168 HR	-40 to 150	F28P550 SG9RSH
F28P550SJ6PDTR	Active	Production	TQFP (PDT) | 128	1000 | LARGE T&R	Yes	NIPDAU	Level-3-260C-168 HR	-40 to 150	F28P550 SJ6PDT
F28P550SJ6PDTR.A	Active	Production	TQFP (PDT) | 128	1000 | LARGE T&R	Yes	NIPDAU	Level-3-260C-168 HR	-40 to 150	F28P550 SJ6PDT
F28P550SJ6PMR	Active	Production	LQFP (PM) | 64	1000 | LARGE T&R	Yes	NIPDAU	Level-3-260C-168 HR	-40 to 150	SJ6PM F28P550
F28P550SJ6PMR.A	Active	Production	LQFP (PM) | 64	1000 | LARGE T&R	Yes	NIPDAU	Level-3-260C-168 HR	-40 to 150	SJ6PM F28P550
F28P550SJ6PNAR	Active	Production	TQFP (PNA) | 80	1000 | LARGE T&R	Yes	NIPDAU	Level-3-260C-168 HR	-40 to 150	SJ6PNA F28P550
F28P550SJ6PNAR.A	Active	Production	TQFP (PNA) | 80	1000 | LARGE T&R	Yes	NIPDAU	Level-3-260C-168 HR	-40 to 150	SJ6PNA F28P550
F28P550SJ6PZR	Active	Production	LQFP (PZ) | 100	1000 | LARGE T&R	Yes	NIPDAU	Level-3-260C-168 HR	-40 to 150	F28P550 SJ6PZ
F28P550SJ6PZR.A	Active	Production	LQFP (PZ) | 100	1000 | LARGE T&R	Yes	NIPDAU	Level-3-260C-168 HR	-40 to 150	F28P550 SJ6PZ
F28P550SJ6RSHR	Active	Production	VQFN (RSH) | 56	4000 | LARGE T&R	Yes	NIPDAU	Level-3-260C-168 HR	-40 to 150	F28P550 SJ6RSH
F28P550SJ6RSHR.A	Active	Production	VQFN (RSH) | 56	4000 | LARGE T&R	Yes	NIPDAU	Level-3-260C-168 HR	-40 to 150	F28P550 SJ6RSH
F28P550SJ9PDT	Active	Production	TQFP (PDT) | 128	90 | JEDEC TRAY (10+1)	Yes	NIPDAU	Level-3-260C-168 HR	-40 to 150	F28P550 SJ9PDT
F28P550SJ9PDT.A	Active	Production	TQFP (PDT) | 128	90 | JEDEC TRAY (10+1)	Yes	NIPDAU	Level-3-260C-168 HR	-40 to 150	F28P550 SJ9PDT
F28P550SJ9PDTR	Active	Production	TQFP (PDT) | 128	1000 | LARGE T&R	Yes	NIPDAU	Level-3-260C-168 HR	-40 to 150	F28P550 SJ9PDT
F28P550SJ9PDTR.A	Active	Production	TQFP (PDT) | 128	1000 | LARGE T&R	Yes	NIPDAU	Level-3-260C-168 HR	-40 to 150	F28P550 SJ9PDT
F28P550SJ9PM	Active	Production	LQFP (PM) | 64	160 | JEDEC TRAY (10+1)	Yes	NIPDAU	Level-3-260C-168 HR	-40 to 150	SJ9PM F28P550

Orderable part number	Status (1)	Material type (2)	Package | Pins	Package qty | Carrier	RoHS (3)	Lead finish/ Ball material (4)	MSL rating/ Peak reflow (5)	Op temp (°C)	Part marking (6)
F28P550SJ9PM.A	Active	Production	LQFP (PM) | 64	160 | JEDEC TRAY (10+1)	Yes	NIPDAU	Level-3-260C-168 HR	-40 to 150	SJ9PM F28P550
F28P550SJ9PMR	Active	Production	LQFP (PM) | 64	1000 | LARGE T&R	Yes	NIPDAU	Level-3-260C-168 HR	-40 to 150	SJ9PM F28P550
F28P550SJ9PMR.A	Active	Production	LQFP (PM) | 64	1000 | LARGE T&R	Yes	NIPDAU	Level-3-260C-168 HR	-40 to 150	SJ9PM F28P550
F28P550SJ9PNA	Active	Production	TQFP (PNA) | 80	160 | JEDEC TRAY (10+1)	Yes	NIPDAU	Level-3-260C-168 HR	-40 to 150	SJ9PNA F28P550
F28P550SJ9PNA.A	Active	Production	TQFP (PNA) | 80	160 | JEDEC TRAY (10+1)	Yes	NIPDAU	Level-3-260C-168 HR	-40 to 150	SJ9PNA F28P550
F28P550SJ9PNAR	Active	Production	TQFP (PNA) | 80	1000 | LARGE T&R	Yes	NIPDAU	Level-3-260C-168 HR	-40 to 150	SJ9PNA F28P550
F28P550SJ9PNAR.A	Active	Production	TQFP (PNA) | 80	1000 | LARGE T&R	Yes	NIPDAU	Level-3-260C-168 HR	-40 to 150	SJ9PNA F28P550
F28P550SJ9PZ	Active	Production	LQFP (PZ) | 100	90 | JEDEC TRAY (10+1)	Yes	NIPDAU	Level-3-260C-168 HR	-40 to 150	F28P550 SJ9PZ
F28P550SJ9PZ.A	Active	Production	LQFP (PZ) | 100	90 | JEDEC TRAY (10+1)	Yes	NIPDAU	Level-3-260C-168 HR	-40 to 150	F28P550 SJ9PZ
F28P550SJ9PZR	Active	Production	LQFP (PZ) | 100	1000 | LARGE T&R	Yes	NIPDAU	Level-3-260C-168 HR	-40 to 150	F28P550 SJ9PZ
F28P550SJ9PZR.A	Active	Production	LQFP (PZ) | 100	1000 | LARGE T&R	Yes	NIPDAU	Level-3-260C-168 HR	-40 to 150	F28P550 SJ9PZ
F28P550SJ9RSHR	Active	Production	VQFN (RSH) | 56	4000 | LARGE T&R	Yes	NIPDAU	Level-3-260C-168 HR	-40 to 150	F28P550 SJ9RSH
F28P550SJ9RSHR.A	Active	Production	VQFN (RSH) | 56	4000 | LARGE T&R	Yes	NIPDAU	Level-3-260C-168 HR	-40 to 150	F28P550 SJ9RSH
F28P559SG2PMRQ1	Active	Production	LQFP (PM) | 64	1000 | LARGE T&R	Yes	NIPDAU	Level-3-260C-168 HR	-40 to 125	SG2PMQ F28P559
F28P559SG2PNARQ1	Active	Production	TQFP (PNA) | 80	1000 | LARGE T&R	Yes	NIPDAU	Level-3-260C-168 HR	-40 to 125	SG2PNAQ F28P559
F28P559SG2PZRQ1	Active	Production	LQFP (PZ) | 100	1000 | LARGE T&R	Yes	NIPDAU	Level-3-260C-168 HR	-40 to 125	F28P559 SG2PZQ
F28P559SG8PMRQ1	Active	Production	LQFP (PM) | 64	1000 | LARGE T&R	Yes	NIPDAU	Level-3-260C-168 HR	-40 to 125	SG8PMQ F28P559

Orderable part number	Status (1)	Material type (2)	Package | Pins	Package qty | Carrier	RoHS (3)	Lead finish/ Ball material (4)	MSL rating/ Peak reflow (5)	Op temp (°C)	Part marking (6)
F28P559SG8PNARQ1	Active	Production	TQFP (PNA) | 80	1000 | LARGE T&R	Yes	NIPDAU	Level-3-260C-168 HR	-40 to 125	SG8PNAQ F28P559
F28P559SG8PZRQ1	Active	Production	LQFP (PZ) | 100	1000 | LARGE T&R	Yes	NIPDAU	Level-3-260C-168 HR	-40 to 125	F28P559 SG8PZQ
F28P559SG9PDTRQ1	Active	Production	TQFP (PDT) | 128	1000 | LARGE T&R	Yes	NIPDAU	Level-3-260C-168 HR	-40 to 125	F28P559 SG9PDTQ
F28P559SG9PMRQ1	Active	Production	LQFP (PM) | 64	1000 | LARGE T&R	Yes	NIPDAU	Level-3-260C-168 HR	-40 to 125	SG9PMQ F28P559
F28P559SG9PNARQ1	Active	Production	TQFP (PNA) | 80	1000 | LARGE T&R	Yes	NIPDAU	Level-3-260C-168 HR	-40 to 125	SG9PNAQ F28P559
F28P559SG9PZRQ1	Active	Production	LQFP (PZ) | 100	1000 | LARGE T&R	Yes	NIPDAU	Level-3-260C-168 HR	-40 to 125	F28P559 SG9PZQ
F28P559SJ2PDTRQ1	Active	Production	TQFP (PDT) | 128	1000 | LARGE T&R	Yes	NIPDAU	Level-3-260C-168 HR	-40 to 150	F28P559 SJ2PDTQ
F28P559SJ2PMRQ1	Active	Production	LQFP (PM) | 64	1000 | LARGE T&R	Yes	NIPDAU	Level-3-260C-168 HR	-40 to 150	SJ2PMQ F28P559
F28P559SJ2PMRQ1.A	Active	Production	LQFP (PM) | 64	1000 | LARGE T&R	Yes	NIPDAU	Level-3-260C-168 HR	-40 to 150	SJ2PMQ F28P559
F28P559SJ2PNARQ1	Active	Production	TQFP (PNA) | 80	1000 | LARGE T&R	Yes	NIPDAU	Level-3-260C-168 HR	-40 to 150	SJ2PNAQ F28P559
F28P559SJ2PZRQ1	Active	Production	LQFP (PZ) | 100	1000 | LARGE T&R	Yes	NIPDAU	Level-3-260C-168 HR	-40 to 150	F28P559 SJ2PZQ
F28P559SJ6PDTRQ1	Active	Production	TQFP (PDT) | 128	1000 | LARGE T&R	Yes	NIPDAU	Level-3-260C-168 HR	-40 to 150	F28P559 SJ6PDTQ
F28P559SJ6PMRQ1	Active	Production	LQFP (PM) | 64	1000 | LARGE T&R	Yes	NIPDAU	Level-3-260C-168 HR	-40 to 150	SJ6PMQ F28P559
F28P559SJ6PNARQ1	Active	Production	TQFP (PNA) | 80	1000 | LARGE T&R	Yes	NIPDAU	Level-3-260C-168 HR	-40 to 150	SJ6PNAQ F28P559
F28P559SJ6PZRQ1	Active	Production	LQFP (PZ) | 100	1000 | LARGE T&R	Yes	NIPDAU	Level-3-260C-168 HR	-40 to 150	F28P559 SJ6PZQ
F28P559SJ9PDTQ1	Active	Production	TQFP (PDT) | 128	90 | JEDEC TRAY (10+1)	Yes	NIPDAU	Level-3-260C-168 HR	-40 to 150	F28P559 SJ9PDTQ
F28P559SJ9PDTQ1.A	Active	Production	TQFP (PDT) | 128	90 | JEDEC TRAY (10+1)	Yes	NIPDAU	Level-3-260C-168 HR	-40 to 150	F28P559 SJ9PDTQ

Orderable part number	Status (1)	Material type (2)	Package | Pins	Package qty | Carrier	RoHS (3)	Lead finish/ Ball material (4)	MSL rating/ Peak reflow (5)	Op temp (°C)	Part marking (6)
F28P559SJ9PDTRQ1	Active	Production	TQFP (PDT) | 128	1000 | LARGE T&R	Yes	NIPDAU	Level-3-260C-168 HR	-40 to 150	F28P559 SJ9PDTQ
F28P559SJ9PDTRQ1.A	Active	Production	TQFP (PDT) | 128	1000 | LARGE T&R	Yes	NIPDAU	Level-3-260C-168 HR	-40 to 150	F28P559 SJ9PDTQ
F28P559SJ9PMQ1	Active	Production	LQFP (PM) | 64	160 | JEDEC TRAY (10+1)	Yes	NIPDAU	Level-3-260C-168 HR	-40 to 150	SJ9PMQ F28P559
F28P559SJ9PMRQ1	Active	Production	LQFP (PM) | 64	1000 | LARGE T&R	Yes	NIPDAU	Level-3-260C-168 HR	-40 to 150	SJ9PMQ F28P559
F28P559SJ9PMRQ1.A	Active	Production	LQFP (PM) | 64	1000 | LARGE T&R	Yes	NIPDAU	Level-3-260C-168 HR	-40 to 150	SJ9PMQ F28P559
F28P559SJ9PNAQ1	Active	Production	TQFP (PNA) | 80	160 | LARGE T&R	Yes	NIPDAU	Level-3-260C-168 HR	-40 to 150	SJ9PNAQ F28P559
F28P559SJ9PNAQ1.A	Active	Production	TQFP (PNA) | 80	160 | LARGE T&R	Yes	NIPDAU	Level-3-260C-168 HR	-40 to 150	SJ9PNAQ F28P559
F28P559SJ9PNARQ1	Active	Production	TQFP (PNA) | 80	1000 | LARGE T&R	Yes	NIPDAU	Level-3-260C-168 HR	-40 to 150	SJ9PNAQ F28P559
F28P559SJ9PNARQ1.A	Active	Production	TQFP (PNA) | 80	1000 | LARGE T&R	Yes	NIPDAU	Level-3-260C-168 HR	-40 to 150	SJ9PNAQ F28P559
F28P559SJ9PZQ1	Active	Production	LQFP (PZ) | 100	90 | JEDEC TRAY (10+1)	Yes	NIPDAU	Level-3-260C-168 HR	-40 to 150	F28P559 SJ9PZQ
F28P559SJ9PZQ1.A	Active	Production	LQFP (PZ) | 100	90 | JEDEC TRAY (10+1)	Yes	NIPDAU	Level-3-260C-168 HR	-40 to 150	F28P559 SJ9PZQ
F28P559SJ9PZRQ1	Active	Production	LQFP (PZ) | 100	1000 | LARGE T&R	Yes	NIPDAU	Level-3-260C-168 HR	-40 to 150	F28P559 SJ9PZQ
F28P559SJ9PZRQ1.A	Active	Production	LQFP (PZ) | 100	1000 | LARGE T&R	Yes	NIPDAU	Level-3-260C-168 HR	-40 to 150	F28P559 SJ9PZQ
XF28P550SJ9PNA	Active	Preproduction	TQFP (PNA) | 80	160 | JEDEC TRAY (10+1)	-	Call TI	Call TI	-40 to 150	
XF28P559SJ9PDTQ1	Active	Preproduction	TQFP (PDT) | 128	90 | JEDEC TRAY (10+1)	-	Call TI	Call TI	-40 to 150	
XF28P559SJ9PDTQ1.A	Active	Preproduction	TQFP (PDT) | 128	90 | JEDEC TRAY (10+1)	-	Call TI	Call TI	-40 to 150	
XF28P559SJ9PMQ1	Active	Preproduction	TQFP (PTF) | 128	160 | JEDEC TRAY (10+1)	-	Call TI	Call TI	-40 to 150	

Orderable part number	Status (1)	Material type (2)	Package | Pins	Package qty | Carrier	RoHS (3)	Lead finish/ Ball material (4)	MSL rating/ Peak reflow (5)	Op temp (°C)	Part marking (6)
XF28P559SJ9PMQ1.A	Active	Preproduction	TQFP (PTF) | 128	160 | JEDEC TRAY (10+1)	-	Call TI	Call TI	-40 to 150	
XF28P559SJ9PNAQ1	Active	Preproduction	TQFP (PNA) | 80	160 | JEDEC TRAY (10+1)	-	Call TI	Call TI	-40 to 150	
XF28P559SJ9PNAQ1.A	Active	Preproduction	TQFP (PNA) | 80	160 | JEDEC TRAY (10+1)	-	Call TI	Call TI	-40 to 150	
XF28P559SJ9PZQ1	Active	Preproduction	LQFP (PZ) | 100	90 | JEDEC TRAY (10+1)	-	Call TI	Call TI	-40 to 150	
XF28P559SJ9PZQ1.A	Active	Preproduction	LQFP (PZ) | 100	90 | JEDEC TRAY (10+1)	-	Call TI	Call TI	-40 to 150	

(1) **Status:** For more details on status, see our product life cycle.

(2) **Material type:** When designated, preproduction parts are prototypes/experimental devices, and are not yet approved or released for full production. Testing and final process, including without limitation quality assurance, reliability performance testing, and/or process qualification, may not yet be complete, and this item is subject to further changes or possible discontinuation. If available for ordering, purchases will be subject to an additional waiver at checkout, and are intended for early internal evaluation purposes only. These items are sold without warranties of any kind.

(3) **RoHS values:** Yes, No, RoHS Exempt. See the TI RoHS Statement for additional information and value definition.

(4) **Lead finish/Ball material:** Parts may have multiple material finish options. Finish options are separated by a vertical ruled line. Lead finish/Ball material values may wrap to two lines if the finish value exceeds the maximum column width.

(5) **MSL rating/Peak reflow:** The moisture sensitivity level ratings and peak solder (reflow) temperatures. In the event that a part has multiple moisture sensitivity ratings, only the lowest level per JEDEC standards is shown. Refer to the shipping label for the actual reflow temperature that will be used to mount the part to the printed circuit board.

(6) **Part marking:** There may be an additional marking, which relates to the logo, the lot trace code information, or the environmental category of the part.

Multiple part markings will be inside parentheses. Only one part marking contained in parentheses and separated by a "~" will appear on a part. If a line is indented then it is a continuation of the previous line and the two combined represent the entire part marking for that device.

Important Information and Disclaimer: The information provided on this page represents TI's knowledge and belief as of the date that it is provided. TI bases its knowledge and belief on information provided by third parties, and makes no representation or warranty as to the accuracy of such information. Efforts are underway to better integrate information from third parties. TI has taken and continues to take reasonable steps to provide representative and accurate information but may not have conducted destructive testing or chemical analysis on incoming materials and chemicals. TI and TI suppliers consider certain information to be proprietary, and thus CAS numbers and other limited information may not be available for release.

In no event shall TI's liability arising out of such information exceed the total purchase price of the TI part(s) at issue in this document sold by TI to Customer on an annual basis.

TAPE AND REEL INFORMATION

REEL DIMENSIONS

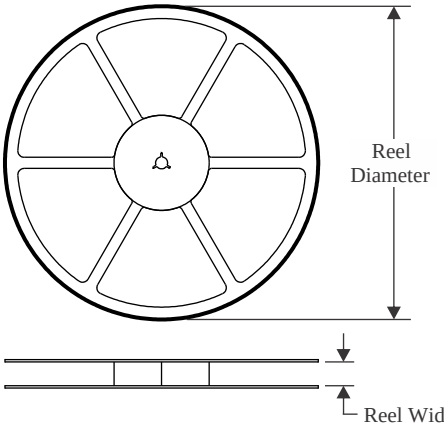

TAPE DIMENSIONS

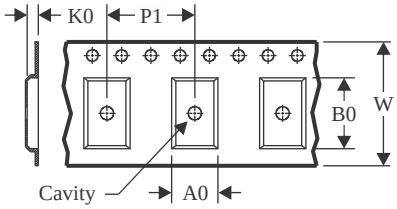

A0	Dimension designed to accommodate the component width
B0	Dimension designed to accommodate the component length
K0	Dimension designed to accommodate the component thickness
W	Overall width of the carrier tape
P1	Pitch between successive cavity centers

QUADRANT ASSIGNMENTS FOR PIN 1 ORIENTATION IN TAPE

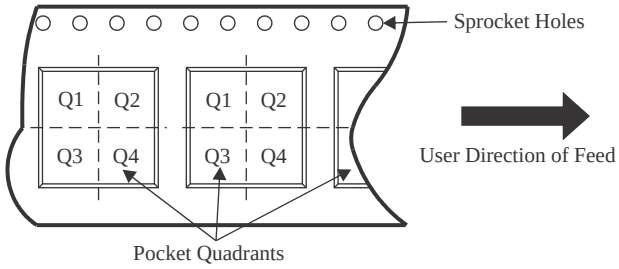

*All dimensions are nominal

Device	Package Type	Package Drawing	Pins	SPQ	Reel Diameter (mm)	Reel Width W1 (mm)	A0 (mm)	B0 (mm)	K0 (mm)	P1 (mm)	W (mm)	Pin1 Quadrant
F28P550SG8PMR	LQFP	PM	64	1000	330.0	24.4	12.5	12.5	2.2	16.0	24.0	Q2
F28P550SG8PNAR	TQFP	PNA	80	1000	330.0	24.4	13.0	13.0	1.5	16.0	24.0	Q2
F28P550SG8PZR	LQFP	PZ	100	1000	330.0	32.4	16.9	16.9	2.1	24.0	32.0	Q2
F28P550SG8RSHR	VQFN	RSH	56	4000	330.0	16.4	7.3	7.3	1.1	12.0	16.0	Q2
F28P550SG9PDTR	TQFP	PDT	128	1000	330.0	24.4	17.0	17.0	1.5	20.0	24.0	Q2
F28P550SG9PMR	LQFP	PM	64	1000	330.0	24.4	12.5	12.5	2.2	16.0	24.0	Q2
F28P550SG9PNAR	TQFP	PNA	80	1000	330.0	24.4	13.0	13.0	1.5	16.0	24.0	Q2
F28P550SG9PZR	LQFP	PZ	100	1000	330.0	32.4	16.9	16.9	2.1	24.0	32.0	Q2
F28P550SG9RSHR	VQFN	RSH	56	4000	330.0	16.4	7.3	7.3	1.1	12.0	16.0	Q2
F28P550SJ6PDTR	TQFP	PDT	128	1000	330.0	24.4	17.0	17.0	1.5	20.0	24.0	Q2
F28P550SJ6PMR	LQFP	PM	64	1000	330.0	24.4	12.5	12.5	2.2	16.0	24.0	Q2
F28P550SJ6PNAR	TQFP	PNA	80	1000	330.0	24.4	13.0	13.0	1.5	16.0	24.0	Q2
F28P550SJ6PZR	LQFP	PZ	100	1000	330.0	32.4	16.9	16.9	2.1	24.0	32.0	Q2
F28P550SJ6RSHR	VQFN	RSH	56	4000	330.0	16.4	7.3	7.3	1.1	12.0	16.0	Q2
F28P550SJ9PDTR	TQFP	PDT	128	1000	330.0	24.4	17.0	17.0	1.5	20.0	24.0	Q2
F28P550SJ9PMR	LQFP	PM	64	1000	330.0	24.4	12.5	12.5	2.2	16.0	24.0	Q2

Device	Package Type	Package Drawing	Pins	SPQ	Reel Diameter (mm)	Reel Width W1 (mm)	A0 (mm)	B0 (mm)	K0 (mm)	P1 (mm)	W (mm)	Pin1 Quadrant
F28P550SJ9PNAR	TQFP	PNA	80	1000	330.0	24.4	13.0	13.0	1.5	16.0	24.0	Q2
F28P550SJ9PZR	LQFP	PZ	100	1000	330.0	32.4	16.9	16.9	2.1	24.0	32.0	Q2
F28P550SJ9RSHR	VQFN	RSH	56	4000	330.0	16.4	7.3	7.3	1.1	12.0	16.0	Q2
F28P559SG2PMRQ1	LQFP	PM	64	1000	330.0	24.4	12.5	12.5	2.2	16.0	24.0	Q2
F28P559SG2PNARQ1	TQFP	PNA	80	1000	330.0	24.4	13.0	13.0	1.5	16.0	24.0	Q2
F28P559SG2PZRQ1	LQFP	PZ	100	1000	330.0	32.4	16.9	16.9	2.1	24.0	32.0	Q2
F28P559SG8PMRQ1	LQFP	PM	64	1000	330.0	24.4	12.5	12.5	2.2	16.0	24.0	Q2
F28P559SG8PNARQ1	TQFP	PNA	80	1000	330.0	24.4	13.0	13.0	1.5	16.0	24.0	Q2
F28P559SG8PZRQ1	LQFP	PZ	100	1000	330.0	32.4	16.9	16.9	2.1	24.0	32.0	Q2
F28P559SG9PDTRQ1	TQFP	PDT	128	1000	330.0	24.4	17.0	17.0	1.5	20.0	24.0	Q2
F28P559SG9PMRQ1	LQFP	PM	64	1000	330.0	24.4	12.5	12.5	2.2	16.0	24.0	Q2
F28P559SG9PNARQ1	TQFP	PNA	80	1000	330.0	24.4	13.0	13.0	1.5	16.0	24.0	Q2
F28P559SG9PZRQ1	LQFP	PZ	100	1000	330.0	32.4	16.9	16.9	2.1	24.0	32.0	Q2
F28P559SJ2PDTRQ1	TQFP	PDT	128	1000	330.0	24.4	17.0	17.0	1.5	20.0	24.0	Q2
F28P559SJ2PMRQ1	LQFP	PM	64	1000	330.0	24.4	12.5	12.5	2.2	16.0	24.0	Q2
F28P559SJ2PNARQ1	TQFP	PNA	80	1000	330.0	24.4	13.0	13.0	1.5	16.0	24.0	Q2
F28P559SJ2PZRQ1	LQFP	PZ	100	1000	330.0	32.4	16.9	16.9	2.1	24.0	32.0	Q2
F28P559SJ6PDTRQ1	TQFP	PDT	128	1000	330.0	24.4	17.0	17.0	1.5	20.0	24.0	Q2
F28P559SJ6PMRQ1	LQFP	PM	64	1000	330.0	24.4	12.5	12.5	2.2	16.0	24.0	Q2
F28P559SJ6PNARQ1	TQFP	PNA	80	1000	330.0	24.4	13.0	13.0	1.5	16.0	24.0	Q2
F28P559SJ6PZRQ1	LQFP	PZ	100	1000	330.0	32.4	16.9	16.9	2.1	24.0	32.0	Q2
F28P559SJ9PDTRQ1	TQFP	PDT	128	1000	330.0	24.4	17.0	17.0	1.5	20.0	24.0	Q2
F28P559SJ9PMRQ1	LQFP	PM	64	1000	330.0	24.4	12.5	12.5	2.2	16.0	24.0	Q2
F28P559SJ9PNARQ1	TQFP	PNA	80	1000	330.0	24.4	13.0	13.0	1.5	16.0	24.0	Q2
F28P559SJ9PZRQ1	LQFP	PZ	100	1000	330.0	32.4	16.9	16.9	2.1	24.0	32.0	Q2

TAPE AND REEL BOX DIMENSIONS

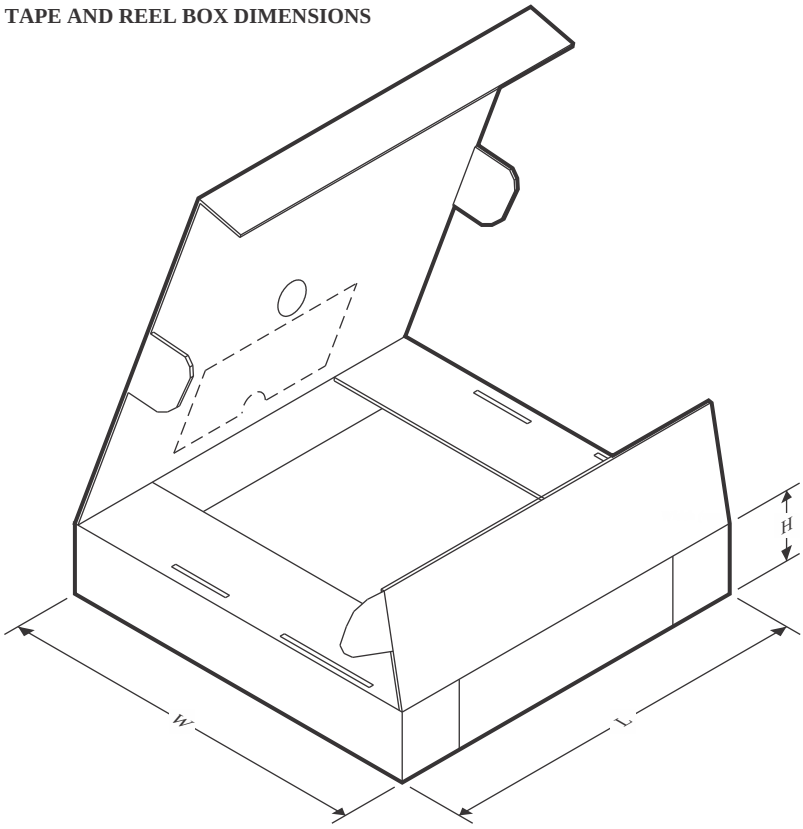

*All dimensions are nominal

Device	Package Type	Package Drawing	Pins	SPQ	Length (mm)	Width (mm)	Height (mm)
F28P550SG8PMR	LQFP	PM	64	1000	367.0	367.0	55.0
F28P550SG8PNAR	TQFP	PNA	80	1000	367.0	367.0	55.0
F28P550SG8PZR	LQFP	PZ	100	1000	367.0	367.0	55.0
F28P550SG8RSHR	VQFN	RSH	56	4000	360.0	360.0	36.0
F28P550SG9PDTR	TQFP	PDT	128	1000	367.0	367.0	55.0
F28P550SG9PMR	LQFP	PM	64	1000	367.0	367.0	55.0
F28P550SG9PNAR	TQFP	PNA	80	1000	367.0	367.0	55.0
F28P550SG9PZR	LQFP	PZ	100	1000	367.0	367.0	55.0
F28P550SG9RSHR	VQFN	RSH	56	4000	360.0	360.0	36.0
F28P550SJ6PDTR	TQFP	PDT	128	1000	367.0	367.0	55.0
F28P550SJ6PMR	LQFP	PM	64	1000	367.0	367.0	55.0
F28P550SJ6PNAR	TQFP	PNA	80	1000	367.0	367.0	55.0
F28P550SJ6PZR	LQFP	PZ	100	1000	367.0	367.0	55.0
F28P550SJ6RSHR	VQFN	RSH	56	4000	360.0	360.0	36.0
F28P550SJ9PDTR	TQFP	PDT	128	1000	367.0	367.0	55.0
F28P550SJ9PMR	LQFP	PM	64	1000	336.6	336.6	41.3
F28P550SJ9PNAR	TQFP	PNA	80	1000	367.0	367.0	55.0
F28P550SJ9PZR	LQFP	PZ	100	1000	367.0	367.0	55.0

Device	Package Type	Package Drawing	Pins	SPQ	Length (mm)	Width (mm)	Height (mm)
F28P550SJ9RSHR	VQFN	RSH	56	4000	360.0	360.0	36.0
F28P559SG2PMRQ1	LQFP	PM	64	1000	336.6	336.6	41.3
F28P559SG2PNARQ1	TQFP	PNA	80	1000	367.0	367.0	55.0
F28P559SG2PZRQ1	LQFP	PZ	100	1000	367.0	367.0	55.0
F28P559SG8PMRQ1	LQFP	PM	64	1000	336.6	336.6	41.3
F28P559SG8PNARQ1	TQFP	PNA	80	1000	367.0	367.0	55.0
F28P559SG8PZRQ1	LQFP	PZ	100	1000	367.0	367.0	55.0
F28P559SG9PDTRQ1	TQFP	PDT	128	1000	367.0	367.0	55.0
F28P559SG9PMRQ1	LQFP	PM	64	1000	336.6	336.6	41.3
F28P559SG9PNARQ1	TQFP	PNA	80	1000	367.0	367.0	55.0
F28P559SG9PZRQ1	LQFP	PZ	100	1000	367.0	367.0	55.0
F28P559SJ2PDTRQ1	TQFP	PDT	128	1000	367.0	367.0	55.0
F28P559SJ2PMRQ1	LQFP	PM	64	1000	367.0	367.0	55.0
F28P559SJ2PNARQ1	TQFP	PNA	80	1000	367.0	367.0	55.0
F28P559SJ2PZRQ1	LQFP	PZ	100	1000	367.0	367.0	55.0
F28P559SJ6PDTRQ1	TQFP	PDT	128	1000	367.0	367.0	55.0
F28P559SJ6PMRQ1	LQFP	PM	64	1000	336.6	336.6	41.3
F28P559SJ6PNARQ1	TQFP	PNA	80	1000	367.0	367.0	55.0
F28P559SJ6PZRQ1	LQFP	PZ	100	1000	367.0	367.0	55.0
F28P559SJ9PDTRQ1	TQFP	PDT	128	1000	367.0	367.0	55.0
F28P559SJ9PMRQ1	LQFP	PM	64	1000	367.0	367.0	55.0
F28P559SJ9PNARQ1	TQFP	PNA	80	1000	367.0	367.0	55.0
F28P559SJ9PZRQ1	LQFP	PZ	100	1000	367.0	367.0	55.0

TRAY

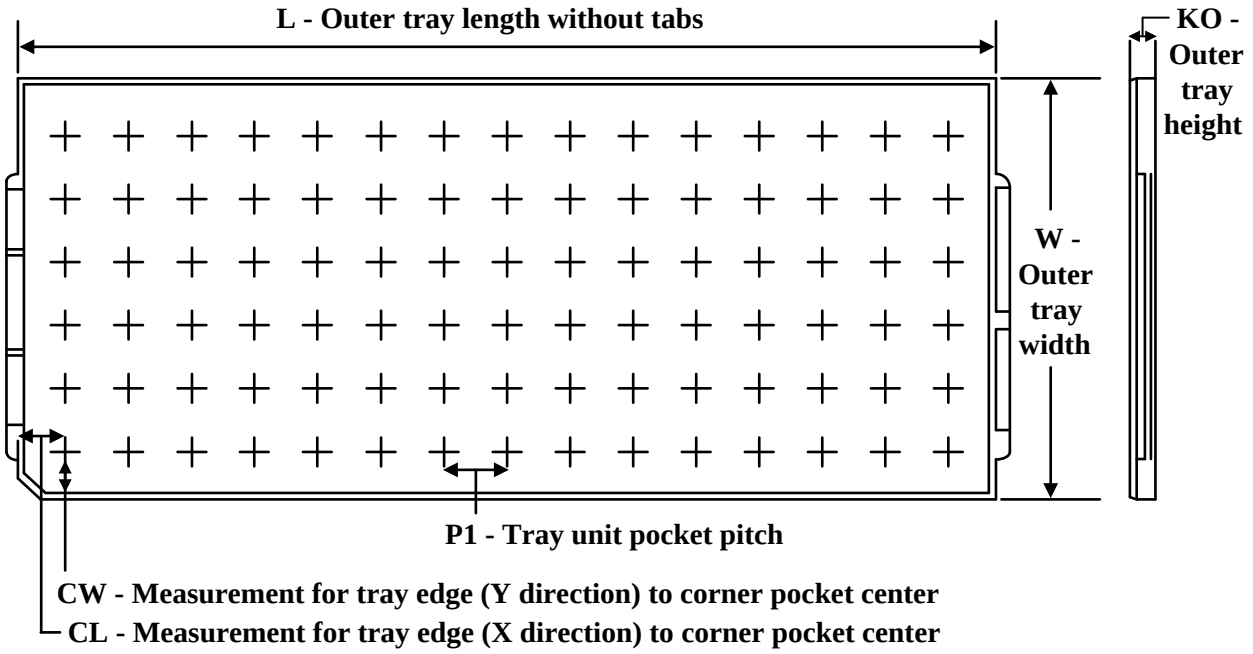

Chamfer on Tray corner indicates Pin 1 orientation of packed units.

*All dimensions are nominal

Device	Package Name	Package Type	Pins	SPQ	Unit array matrix	Max temperature (°C)	L (mm)	W (mm)	K0 (µm)	P1 (mm)	CL (mm)	CW (mm)
F28P550SJ9PDT	PDT	TQFP	128	90	6 X 15	150	315	135.9	7620	15.4	20.3	21
F28P550SJ9PDT.A	PDT	TQFP	128	90	6 X 15	150	315	135.9	7620	15.4	20.3	21
F28P550SJ9PM	PM	LQFP	64	160	8 X 20	150	315	135.9	7620	15.2	13.1	13
F28P550SJ9PM.A	PM	LQFP	64	160	8 X 20	150	315	135.9	7620	15.2	13.1	13
F28P550SJ9PNA	PNA	TQFP	80	160	8 X 20	150	322.6	135.9	7620	15.2	13.1	13
F28P550SJ9PNA.A	PNA	TQFP	80	160	8 X 20	150	322.6	135.9	7620	15.2	13.1	13
F28P550SJ9PZ	PZ	LQFP	100	90	6 x 15	150	315	135.9	7620	20.3	15.4	15.4
F28P550SJ9PZ.A	PZ	LQFP	100	90	6 x 15	150	315	135.9	7620	20.3	15.4	15.4
F28P559SJ9PDTQ1	PDT	TQFP	128	90	6 X 15	150	315	135.9	7620	15.4	20.3	21
F28P559SJ9PDTQ1.A	PDT	TQFP	128	90	6 X 15	150	315	135.9	7620	15.4	20.3	21
F28P559SJ9PMQ1	PM	LQFP	64	160	8 X 20	150	315	135.9	7620	15.2	13.1	13
F28P559SJ9PNAQ1	PNA	TQFP	80	160	8 X 20	150	322.6	135.9	7620	15.2	13.1	13
F28P559SJ9PNAQ1.A	PNA	TQFP	80	160	8 X 20	150	322.6	135.9	7620	15.2	13.1	13
F28P559SJ9PZQ1	PZ	LQFP	100	90	6 x 15	150	315	135.9	7620	20.3	15.4	15.4
F28P559SJ9PZQ1.A	PZ	LQFP	100	90	6 x 15	150	315	135.9	7620	20.3	15.4	15.4

PACKAGE OUTLINE

PNA0080A

TQFP - 1.2 mm max height

PLASTIC QUAD FLATPACK

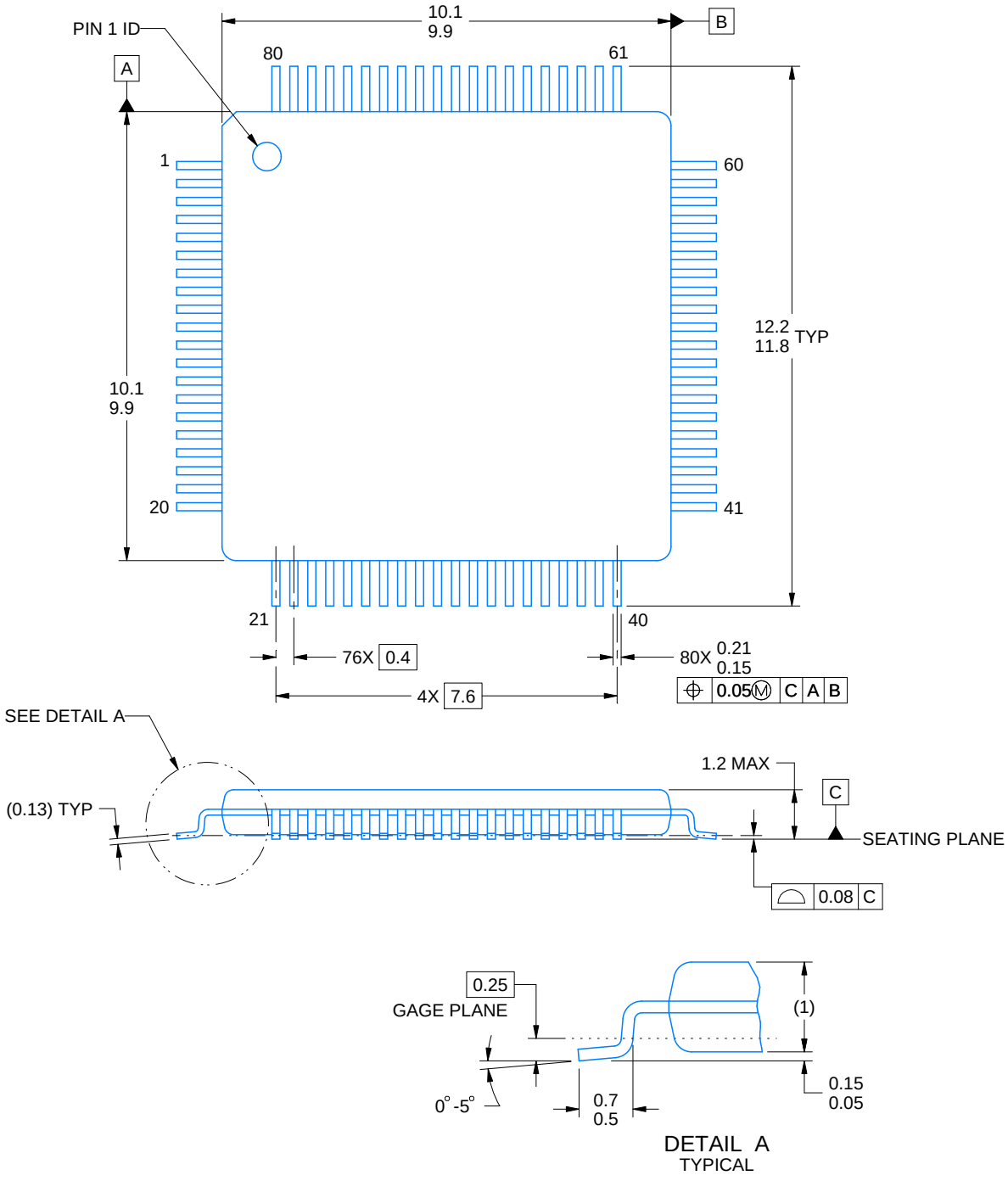

4229169/E 09/2024

NOTES:

1. All linear dimensions are in millimeters. Any dimensions in parenthesis are for reference only. Dimensioning and tolerancing per ASME Y14.5M.
2. This drawing is subject to change without notice.
3. Reference JEDEC registration MS-026.

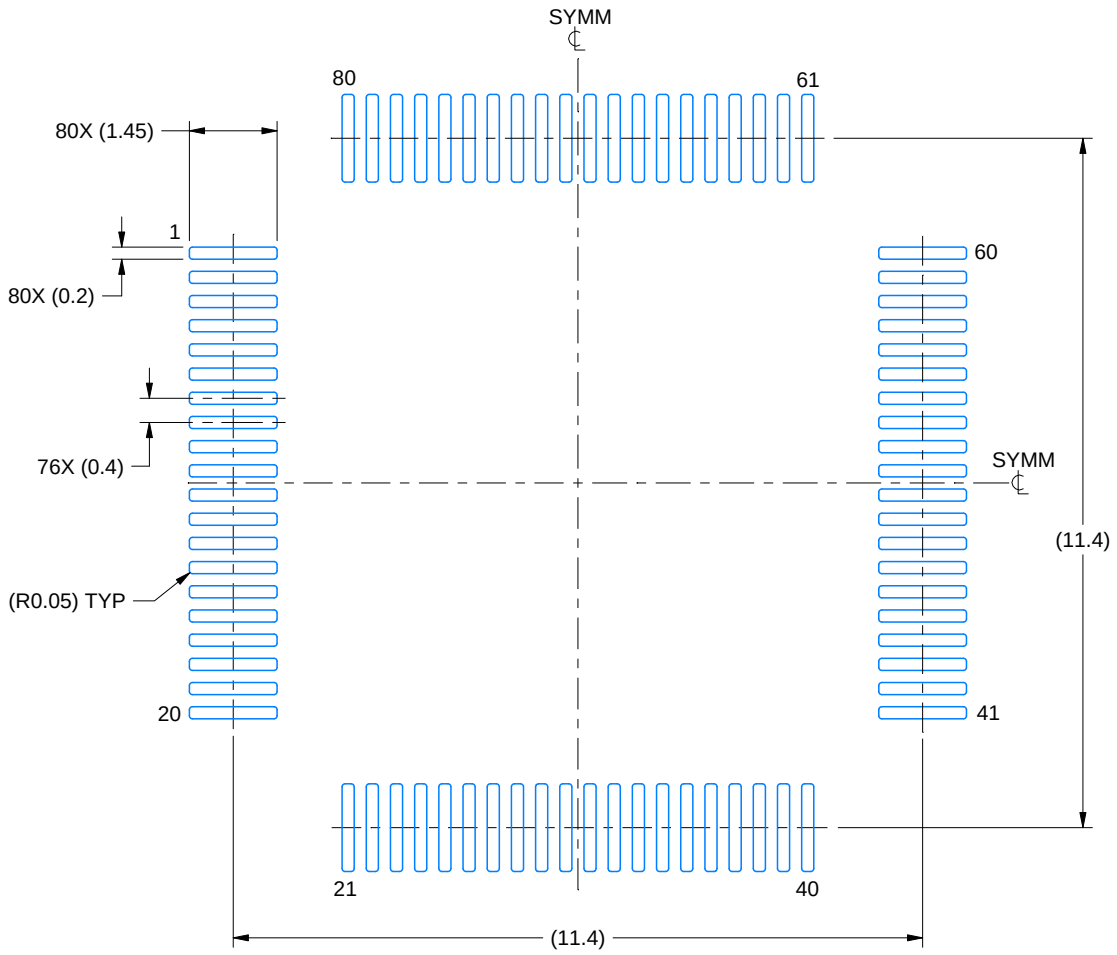

LAND PATTERN EXAMPLE
EXPOSED METAL SHOWN
SCALE:8X

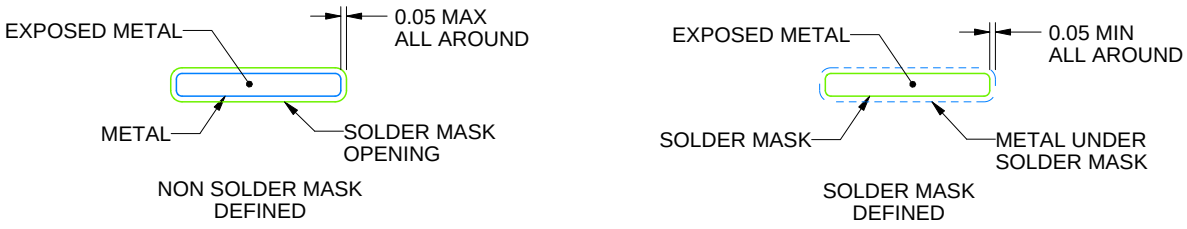

SOLDER MASK DETAILS

4229169/E 09/2024

NOTES: (continued)

4. Publication IPC-7351 may have alternate designs.
5. Solder mask tolerances between and around signal pads can vary based on board fabrication site.
6. For more information, see Texas Instruments literature number SLMA004 (www.ti.com/lit/slma004).

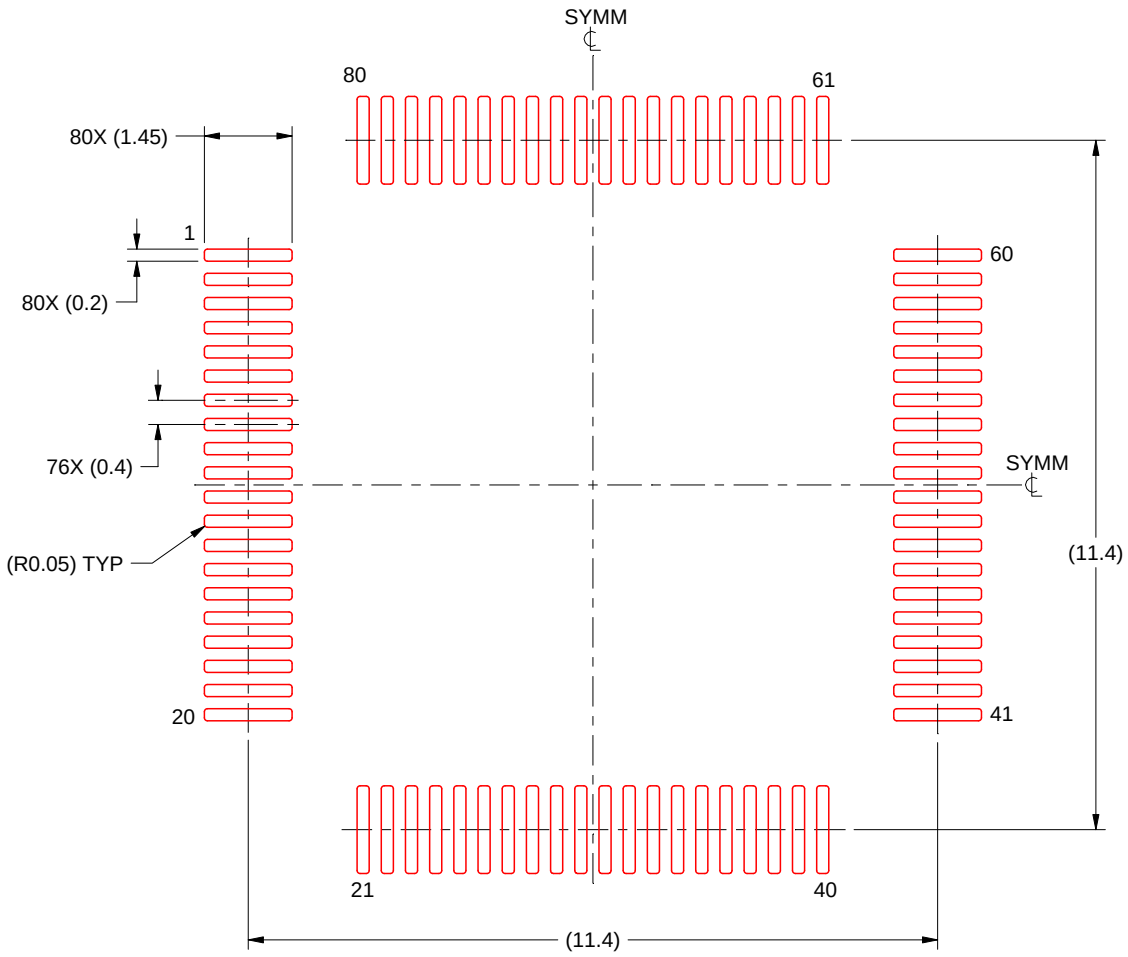

SOLDER PASTE EXAMPLE
BASED ON 0.1 mm THICK STENCIL
SCALE:8X

4229169/E 09/2024

NOTES: (continued)

7. Laser cutting apertures with trapezoidal walls and rounded corners may offer better paste release. IPC-7525 may have alternate design recommendations.
8. Board assembly site may have different recommendations for stencil design.

PACKAGE OUTLINE

PDT0128A

TQFP - 1.2 mm max height

PLASTIC QUAD FLATPACK

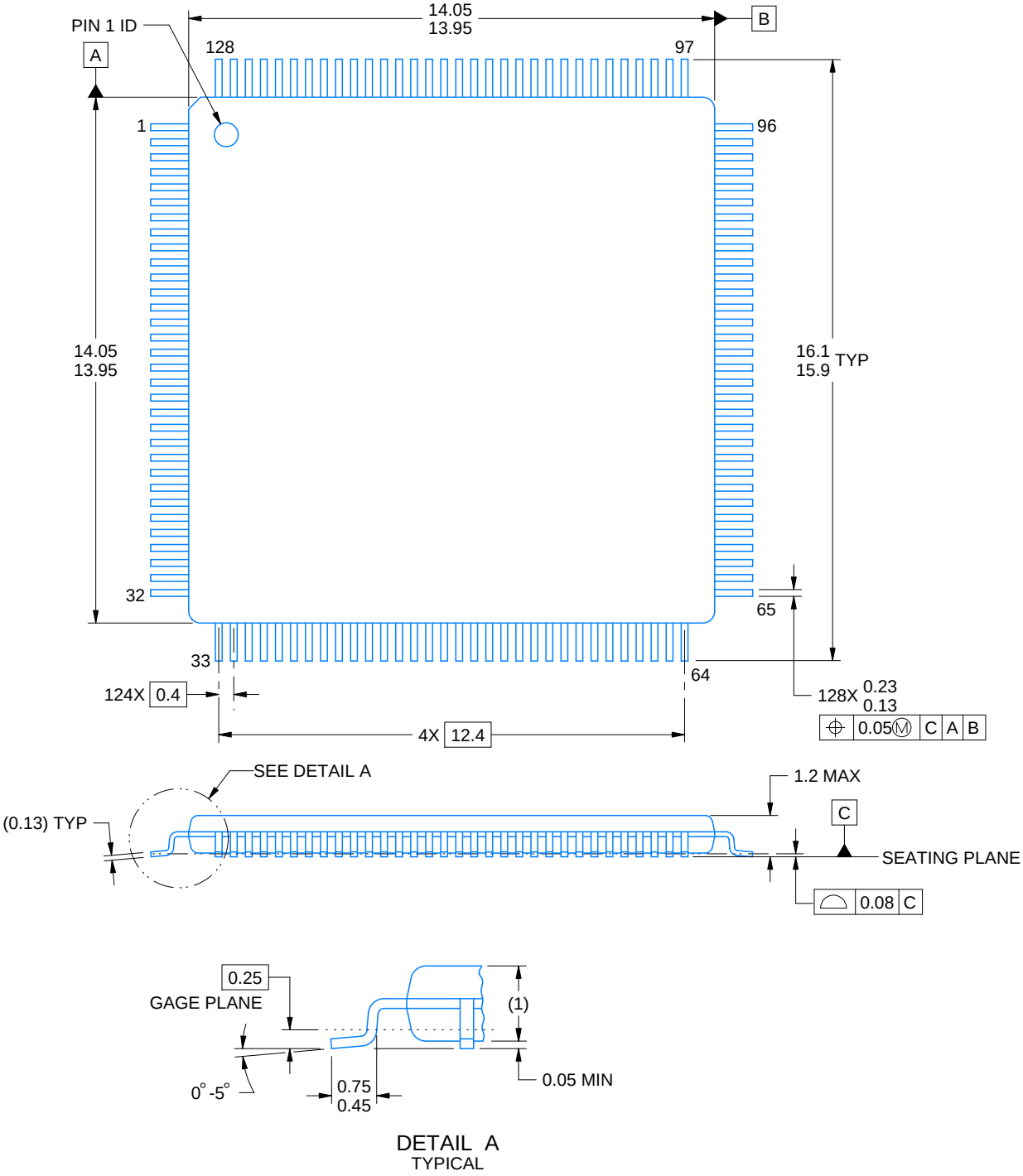

NOTES:

1. All linear dimensions are in millimeters. Any dimensions in parenthesis are for reference only. Dimensioning and tolerancing per ASME Y14.5M.
2. This drawing is subject to change without notice.

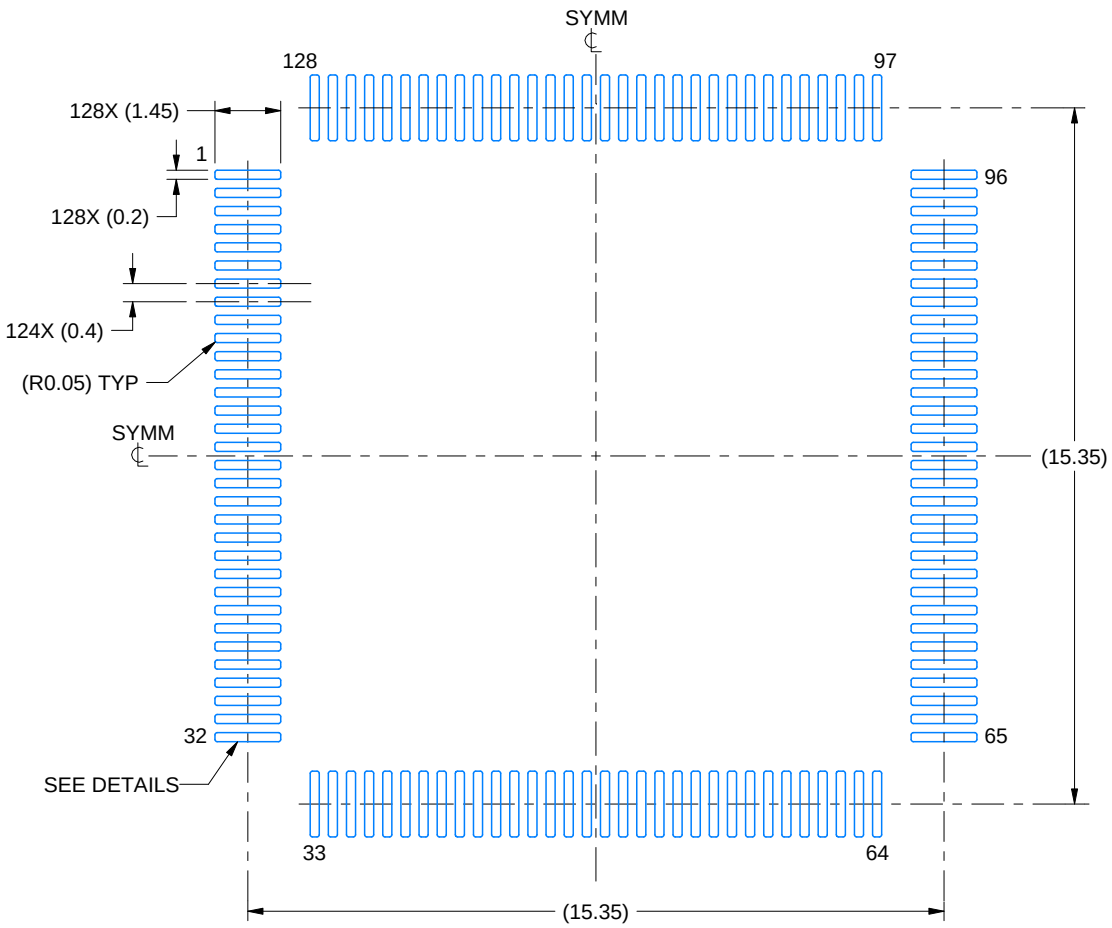

LAND PATTERN EXAMPLE
EXPOSED METAL SHOWN
SCALE:6X

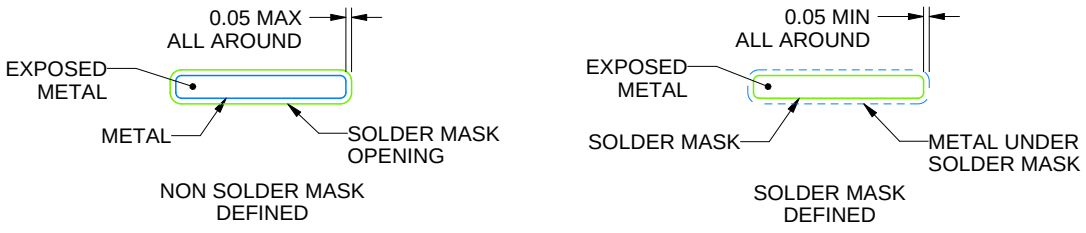

SOLDER MASK DETAILS

4215171/A 10/2023

NOTES: (continued)

3. Publication IPC-7351 may have alternate designs.
4. Solder mask tolerances between and around signal pads can vary based on board fabrication site.
5. For more information, see Texas Instruments literature numbers SLMA002 (www.ti.com/lit/slma002) and SLMA004 (www.ti.com/lit/slma004).

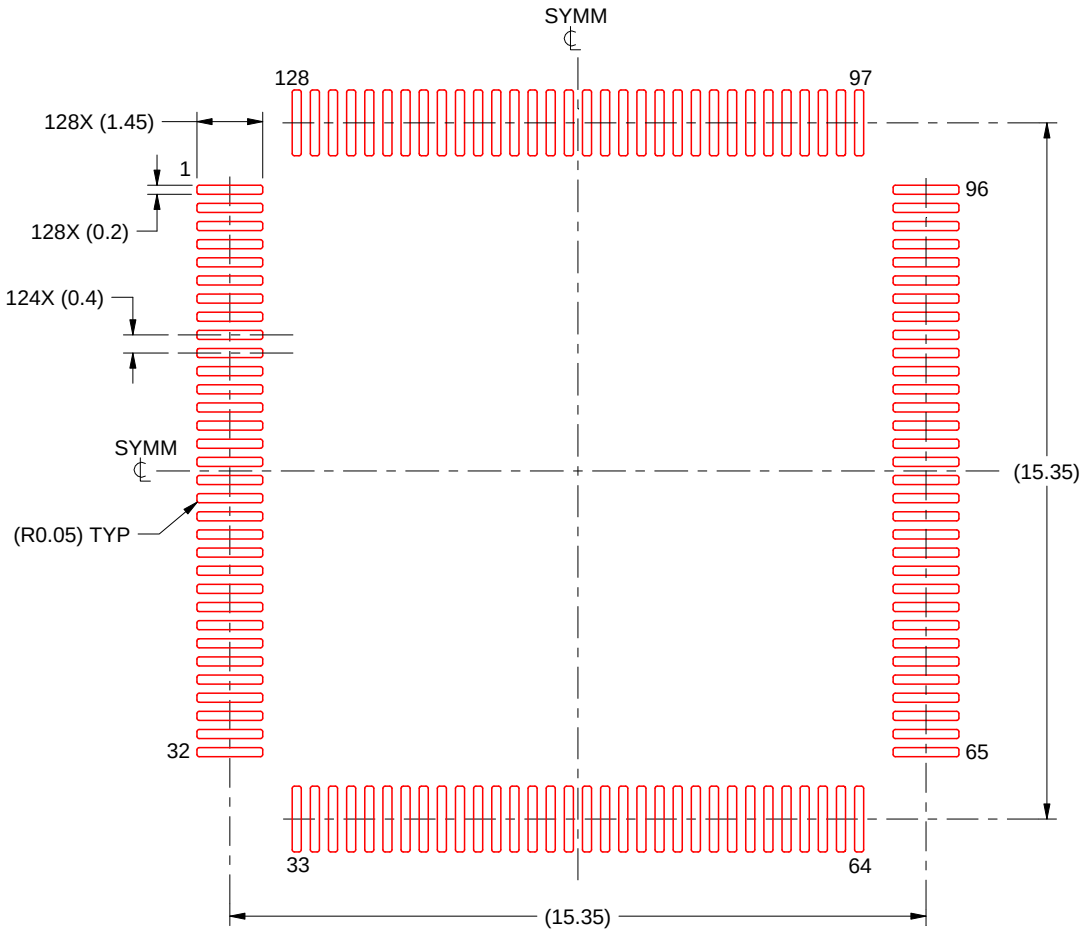

SOLDER PASTE EXAMPLE
BASED ON 0.1 mm THICK STENCIL
SCALE:6X

4215171/A 10/2023

NOTES: (continued)

6. Laser cutting apertures with trapezoidal walls and rounded corners may offer better paste release. IPC-7525 may have alternate design recommendations.
7. Board assembly site may have different recommendations for stencil design.

GENERIC PACKAGE VIEW

RSH 56

VQFN - 1 mm max height

PLASTIC QUAD FLATPACK - NO LEAD

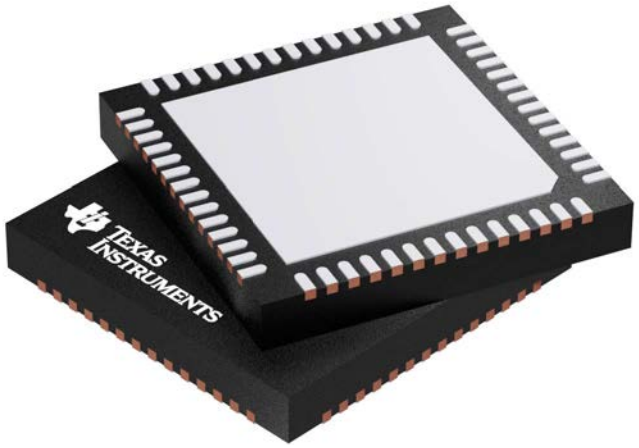

Images above are just a representation of the package family, actual package may vary.
Refer to the product data sheet for package details.

4207513/D

RSH0056G

PACKAGE OUTLINE

VQFN - 1 mm max height

PLASTIC QUAD FLATPACK - NO LEAD

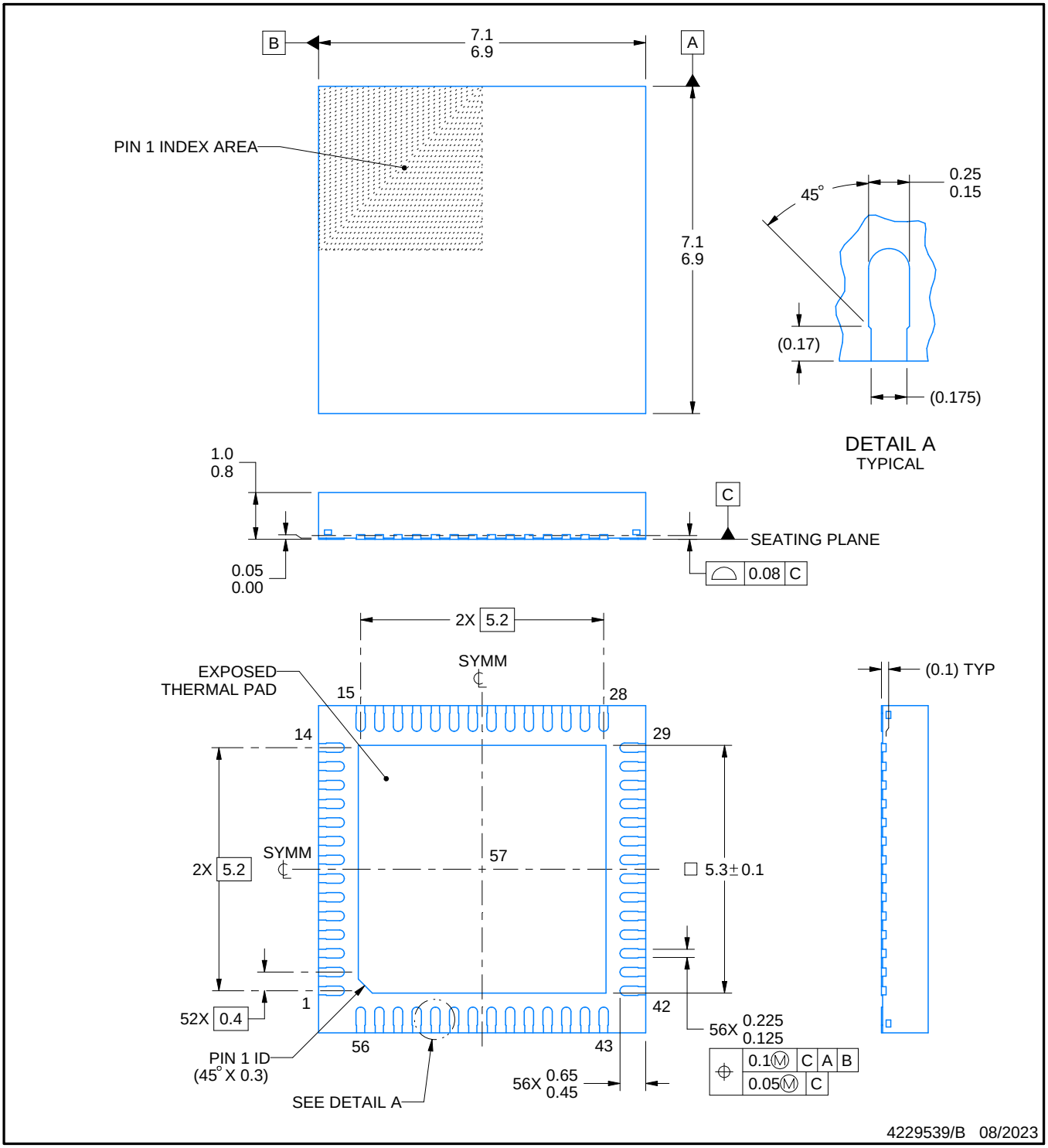

NOTES:

1. All linear dimensions are in millimeters. Any dimensions in parenthesis are for reference only. Dimensioning and tolerancing per ASME Y14.5M.
2. This drawing is subject to change without notice.
3. The package thermal pad must be soldered to the printed circuit board for thermal and mechanical performance.

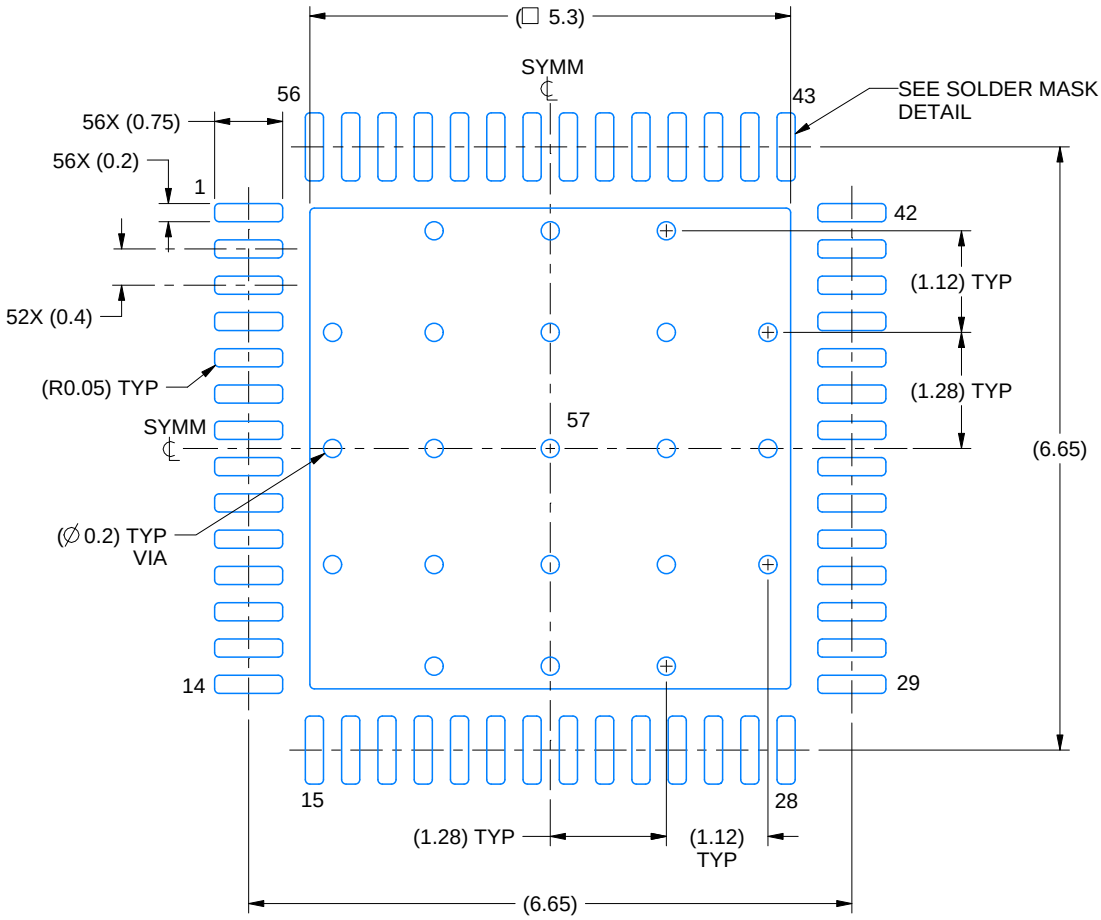

LAND PATTERN EXAMPLE
EXPOSED METAL SHOWN
SCALE: 12X

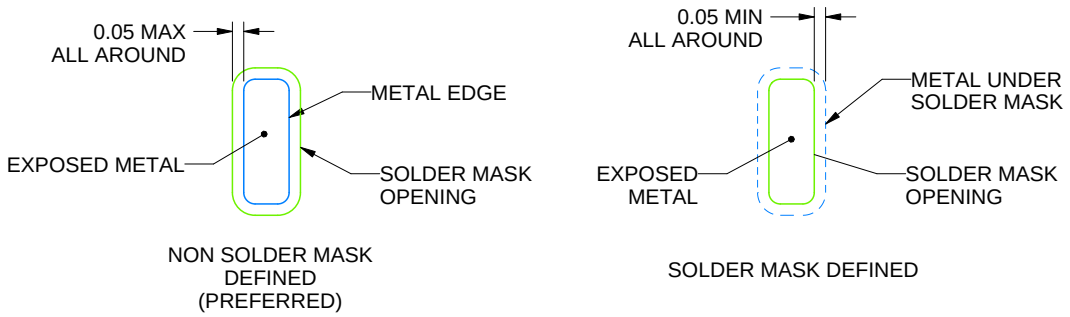

SOLDER MASK DETAILS

4229539/B 08/2023

NOTES: (continued)

4. This package is designed to be soldered to a thermal pad on the board. For more information, see Texas Instruments literature number SLUA271 (www.ti.com/lit/slua271).
5. Vias are optional depending on application, refer to device data sheet. If any vias are implemented, refer to their locations shown on this view. It is recommended that vias under paste be filled, plugged or tented.

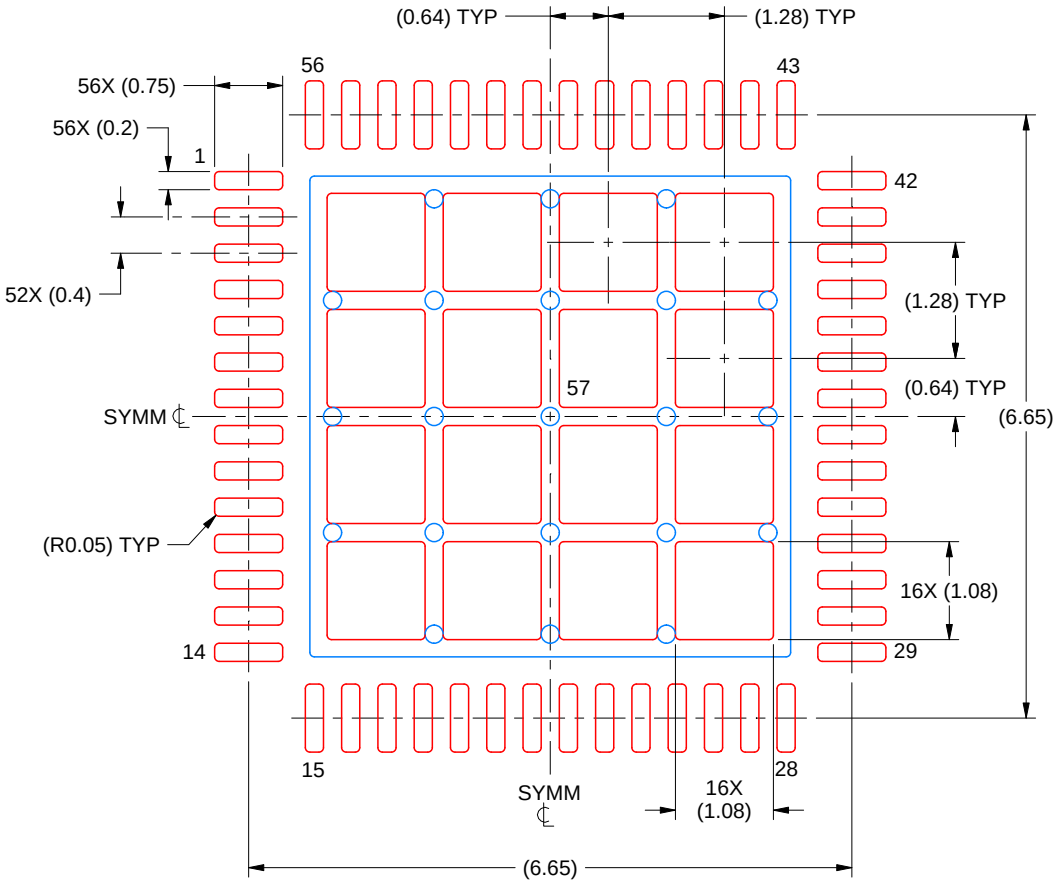

SOLDER PASTE EXAMPLE
BASED ON 0.100 MM THICK STENCIL
SCALE: 12X

EXPOSED PAD 57
66% PRINTED SOLDER COVERAGE BY AREA UNDER PACKAGE

4229539/B 08/2023

NOTES: (continued)

6. Laser cutting apertures with trapezoidal walls and rounded corners may offer better paste release. IPC-7525 may have alternate design recommendations.

PACKAGE OUTLINE

PZ0100A

LQFP - 1.6 mm max height

PLASTIC QUAD FLATPACK

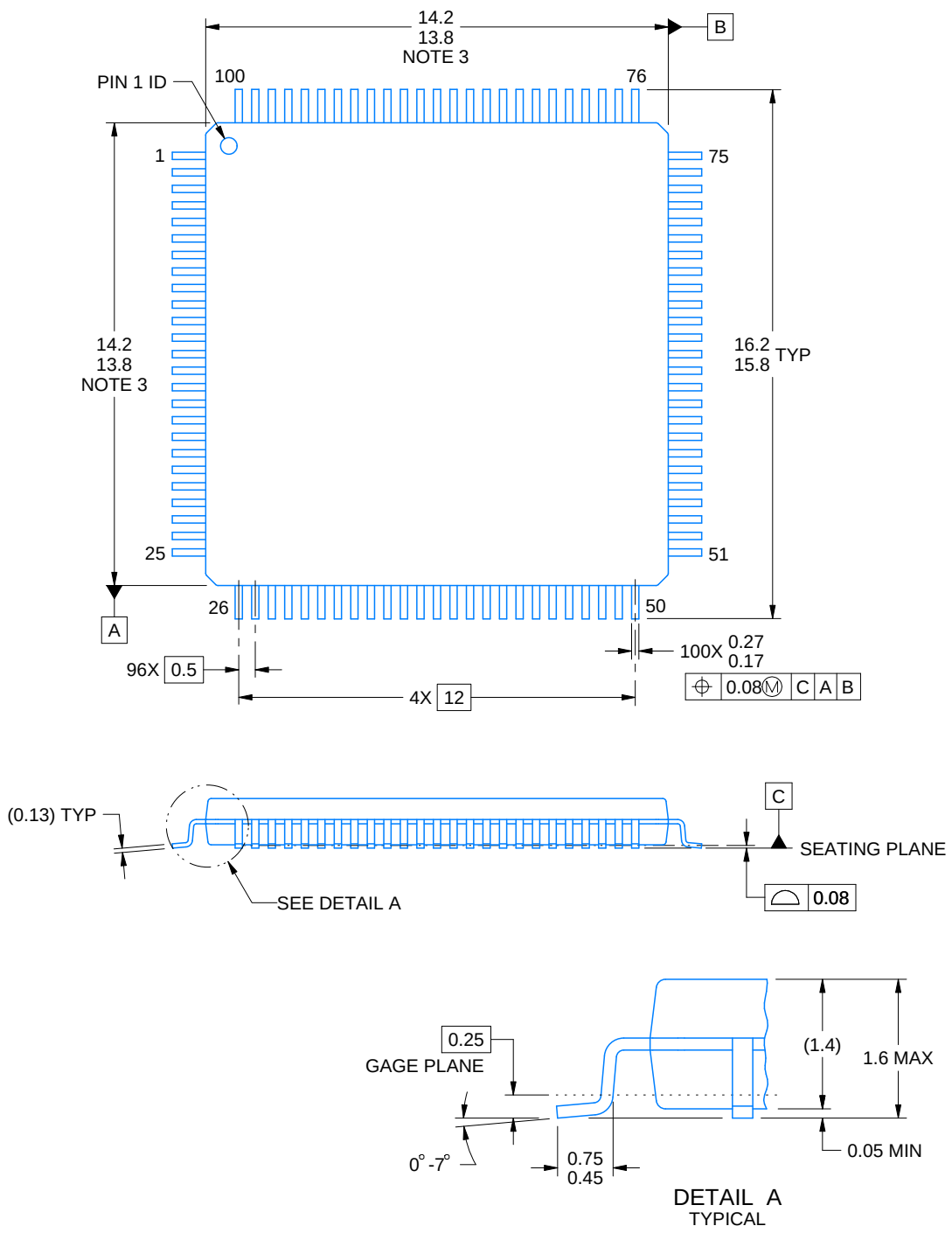

NOTES:

1. All linear dimensions are in millimeters. Any dimensions in parenthesis are for reference only. Dimensioning and tolerancing per ASME Y14.5M.
2. This drawing is subject to change without notice.
3. This dimension does not include mold flash, protrusions, or gate burrs. Mold flash, protrusions, or gate burrs shall not exceed 0.15 mm per side.
4. Reference JEDEC registration MS-026.

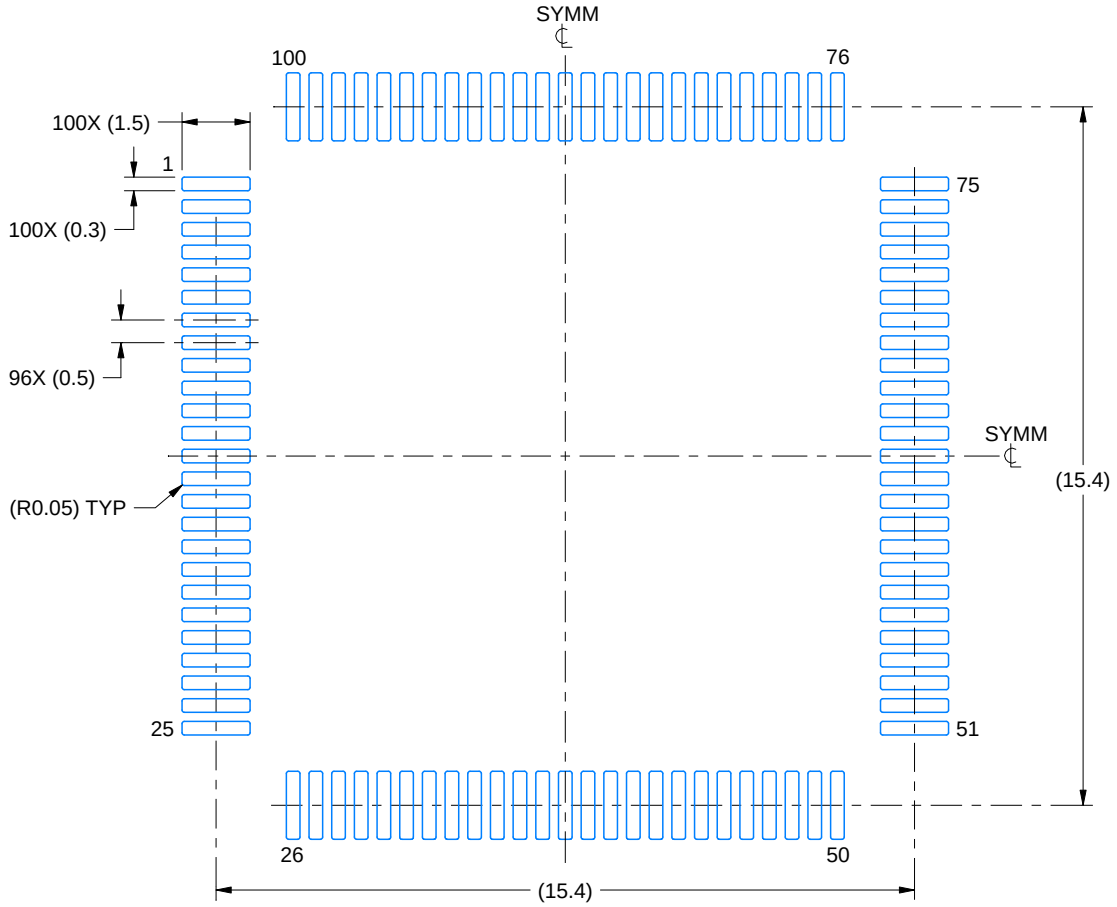

LAND PATTERN EXAMPLE
EXPOSED METAL SHOWN
SCALE:6X

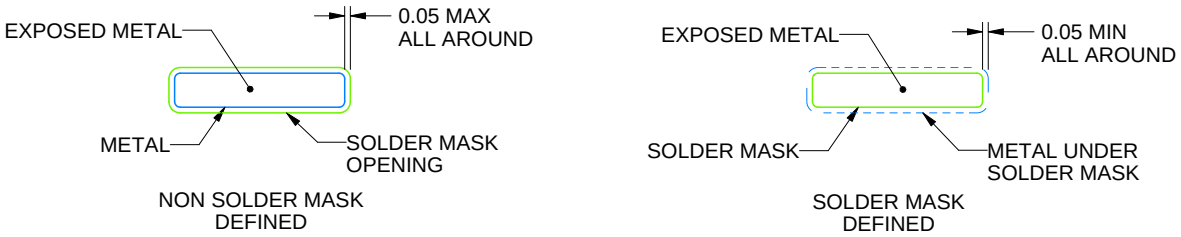

SOLDER MASK DETAILS

4215169/A 03/2017

NOTES: (continued)

5. Publication IPC-7351 may have alternate designs.
6. Solder mask tolerances between and around signal pads can vary based on board fabrication site.
7. For more information, see Texas Instruments literature number SLMA004 (www.ti.com/lit/slma004).

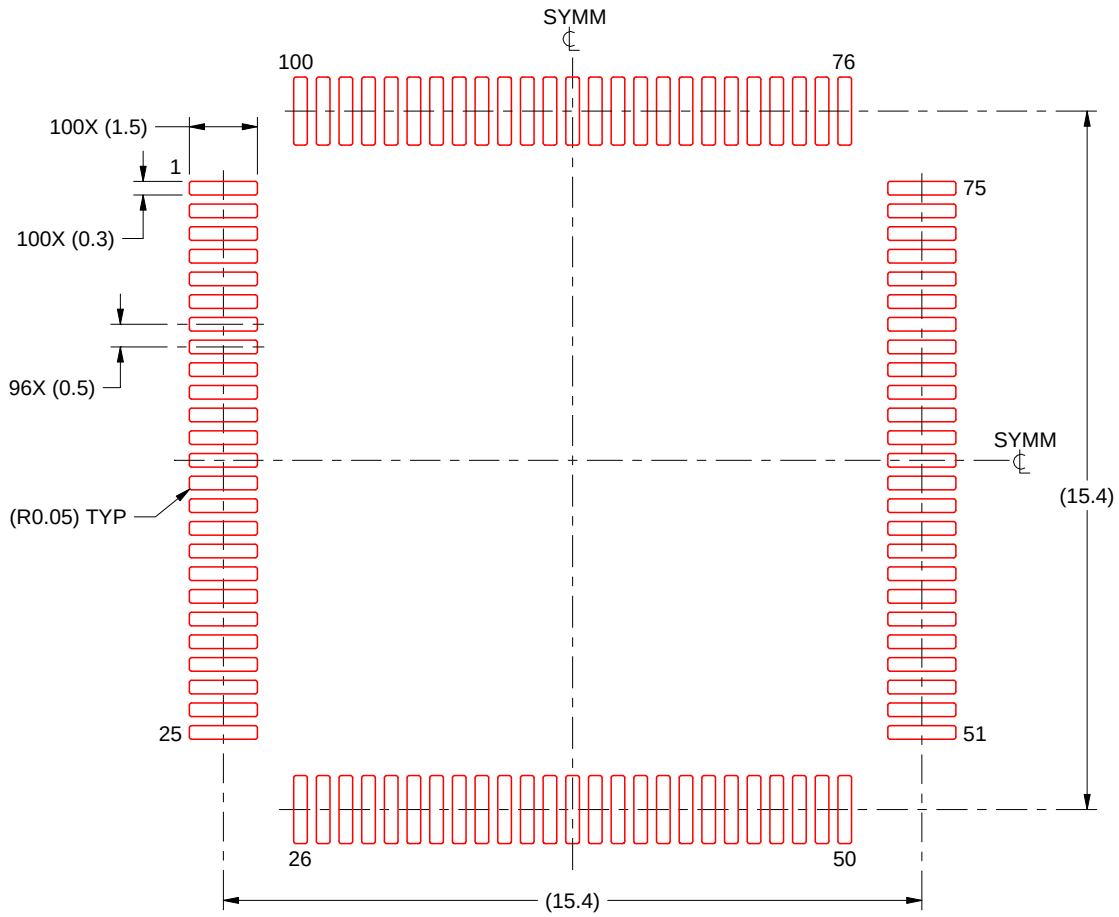

SOLDER PASTE EXAMPLE
BASED ON 0.125 mm THICK STENCIL
SCALE:6X

4215169/A 03/2017

NOTES: (continued)

8. Laser cutting apertures with trapezoidal walls and rounded corners may offer better paste release. IPC-7525 may have alternate design recommendations.
9. Board assembly site may have different recommendations for stencil design.

PACKAGE OUTLINE

PM0064A

LQFP - 1.6 mm max height

PLASTIC QUAD FLATPACK

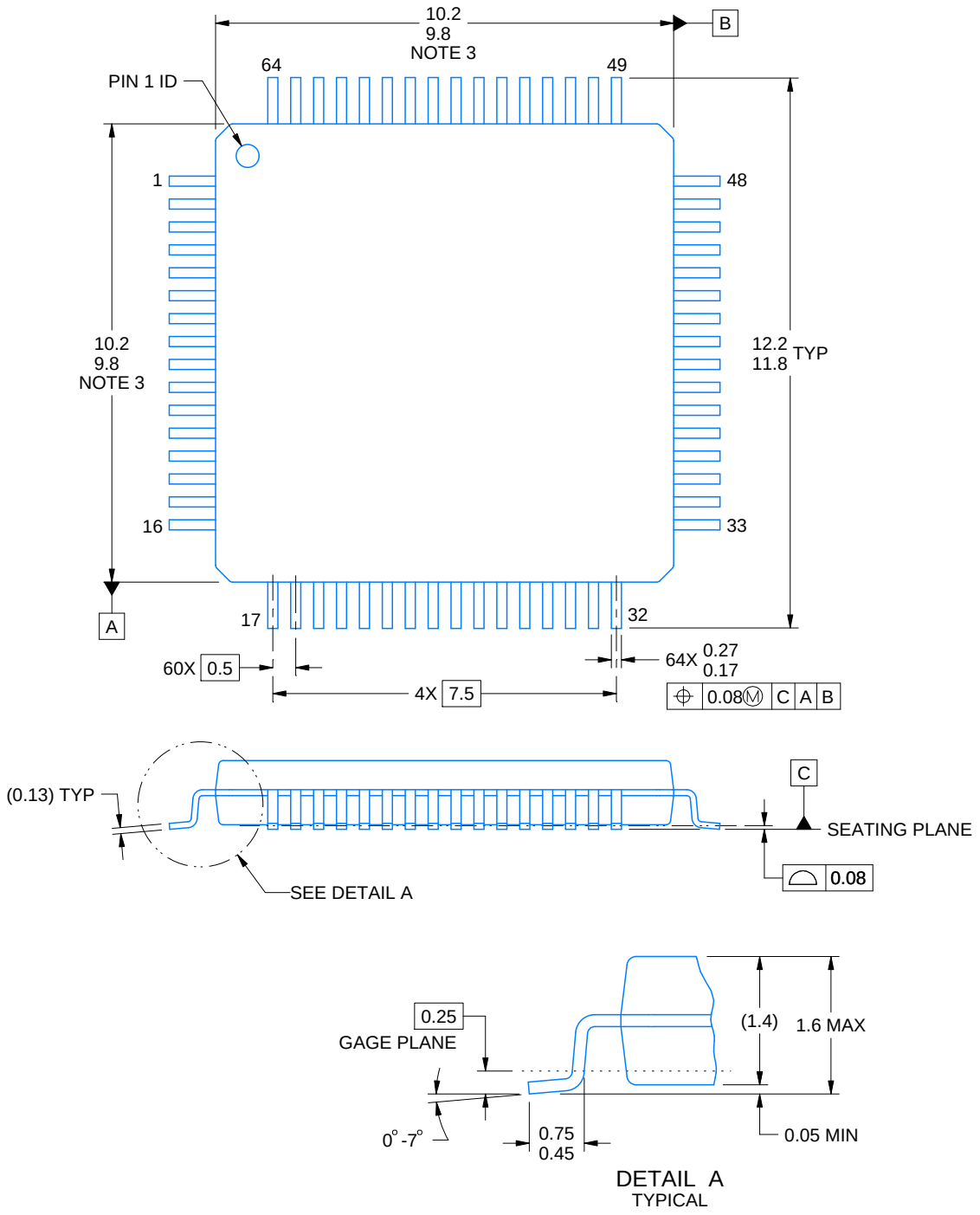

4215162/A 03/2017

NOTES:

1. All linear dimensions are in millimeters. Any dimensions in parenthesis are for reference only. Dimensioning and tolerancing per ASME Y14.5M.
2. This drawing is subject to change without notice.
3. This dimension does not include mold flash, protrusions, or gate burrs. Mold flash, protrusions, or gate burrs shall not exceed 0.15 mm per side.
4. Reference JEDEC registration MS-026.

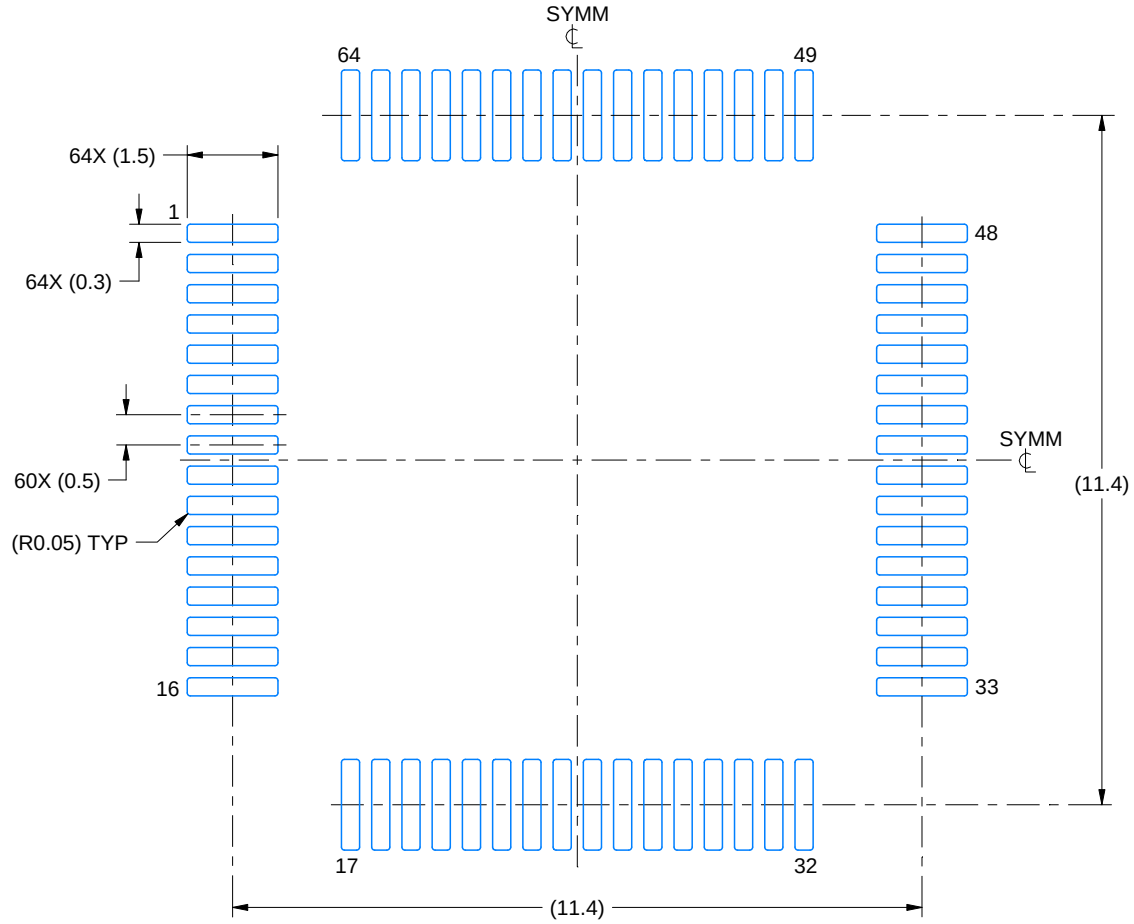

LAND PATTERN EXAMPLE
EXPOSED METAL SHOWN
SCALE:8X

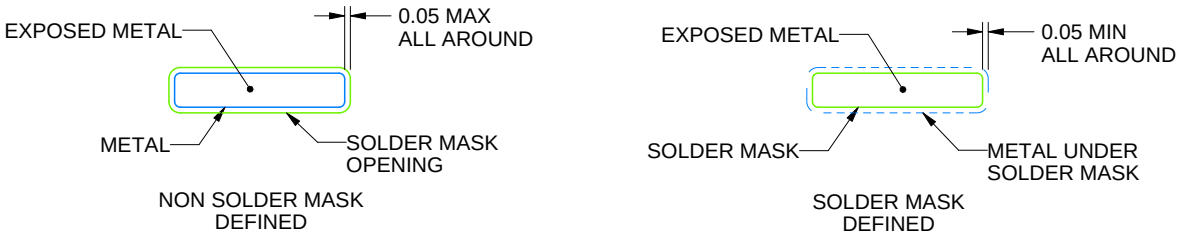

SOLDER MASK DETAILS

4215162/A 03/2017

NOTES: (continued)

5. Publication IPC-7351 may have alternate designs.
6. Solder mask tolerances between and around signal pads can vary based on board fabrication site.
7. For more information, see Texas Instruments literature number SLMA004 (www.ti.com/lit/slma004).

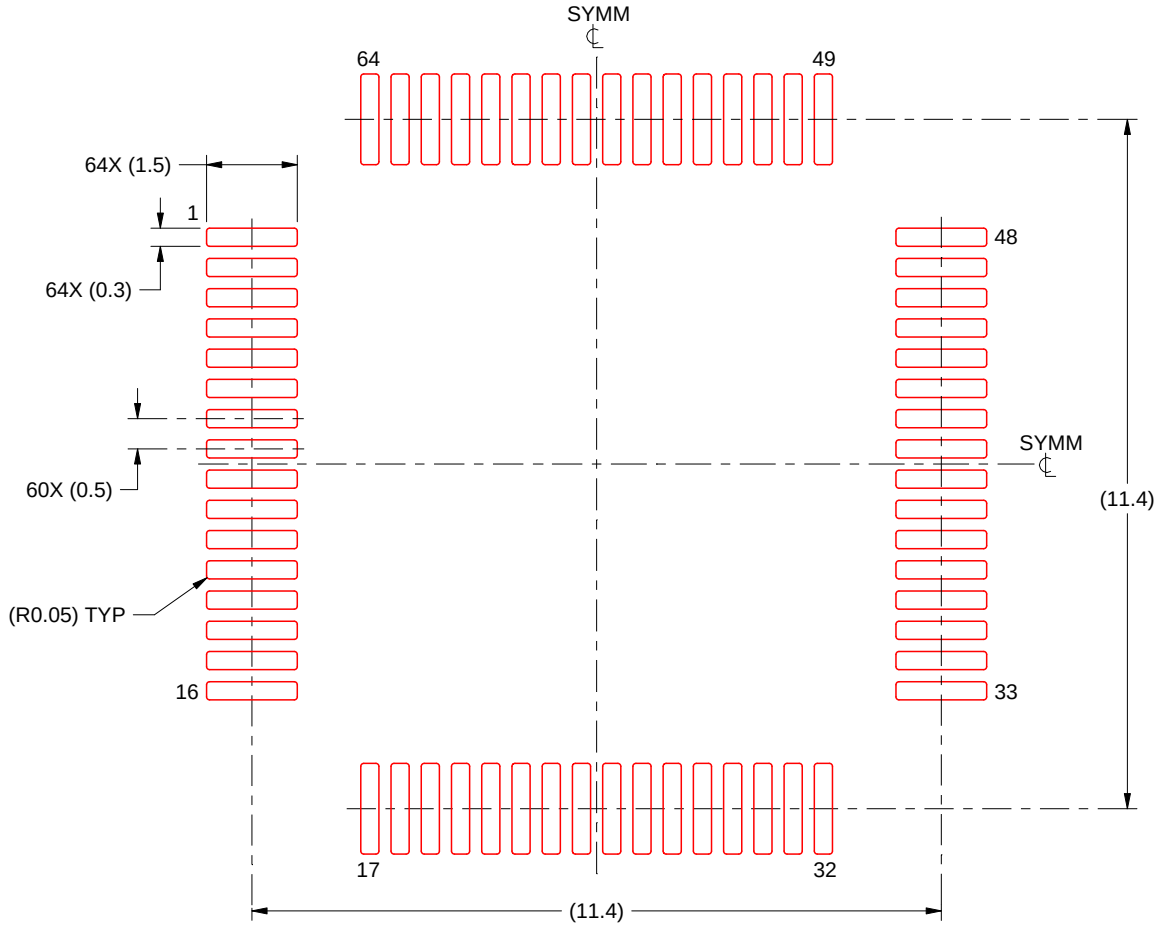

SOLDER PASTE EXAMPLE
BASED ON 0.125 mm THICK STENCIL
SCALE:8X

4215162/A 03/2017

NOTES: (continued)

8. Laser cutting apertures with trapezoidal walls and rounded corners may offer better paste release. IPC-7525 may have alternate design recommendations.
9. Board assembly site may have different recommendations for stencil design.

IMPORTANT NOTICE AND DISCLAIMER

TI PROVIDES TECHNICAL AND RELIABILITY DATA (INCLUDING DATASHEETS), DESIGN RESOURCES (INCLUDING REFERENCE DESIGNS), APPLICATION OR OTHER DESIGN ADVICE, WEB TOOLS, SAFETY INFORMATION, AND OTHER RESOURCES “AS IS” AND WITH ALL FAULTS, AND DISCLAIMS ALL WARRANTIES, EXPRESS AND IMPLIED, INCLUDING WITHOUT LIMITATION ANY IMPLIED WARRANTIES OF MERCHANTABILITY, FITNESS FOR A PARTICULAR PURPOSE OR NON-INFRINGEMENT OF THIRD PARTY INTELLECTUAL PROPERTY RIGHTS.

These resources are intended for skilled developers designing with TI products. You are solely responsible for (1) selecting the appropriate TI products for your application, (2) designing, validating and testing your application, and (3) ensuring your application meets applicable standards, and any other safety, security, regulatory or other requirements.

These resources are subject to change without notice. TI grants you permission to use these resources only for development of an application that uses the TI products described in the resource. Other reproduction and display of these resources is prohibited. No license is granted to any other TI intellectual property right or to any third party intellectual property right. TI disclaims responsibility for, and you fully indemnify TI and its representatives against any claims, damages, costs, losses, and liabilities arising out of your use of these resources.

TI’s products are provided subject to TI’s Terms of Sale, TI’s General Quality Guidelines, or other applicable terms available either on ti.com or provided in conjunction with such TI products. TI’s provision of these resources does not expand or otherwise alter TI’s applicable warranties or warranty disclaimers for TI products. Unless TI explicitly designates a product as custom or customer-specified, TI products are standard, catalog, general purpose devices.

TI objects to and rejects any additional or different terms you may propose.

Copyright © 2026, Texas Instruments Incorporated

Last updated 10/2025