# TMUX405x 24V, 8:1, 1-Channel, 4:1, 2-Channel and 2:1, 3-Channel Multiplexers with 1.8V Logic

## 1 Features

- Single supply range: 5V to 24V
- Dual supply range: up to ±12V
- Low capacitance: 3pF
- –55°C to +125°C operating temperature
- Bidirectional signal path
- Rail-to-rail operation
- 1.8V logic compatible
- Break-before-make switching
- ESD protection HBM: 2000V
- TMUX405x – pin compatible with:
  - Industry standard 4051, 4052, and 4053 muxes

## 2 Applications

- Analog multiplexing and demultiplexing
- Factory automation and control
- Appliances
- Battery test equipment
- Power delivery
- Medical
- Building automation
- Grid infrastructure

## 3 Description

The TMUX405x devices are general purpose complementary metal-oxide semiconductor (CMOS) multiplexers (MUX). The TMUX4051 is an 8:1, 1-channel multiplexer, the TMUX4052 is a 4:1, 2-channel multiplexer, and the TMUX4053 is 2:1, 3 channel switch. The devices work with a single supply (5V to 24V), dual supplies (up to ±12V), or asymmetric supplies (such as $V_{DD}$ = 12V, $V_{SS}$ = –5V). The wide supply voltage range allows the TMUX405x devices to be used in a broad array of applications from battery testers to appliances.

The TMUX405x devices support bidirectional analog signals on the source (Sx) and drain (Dx) pins ranging from $V_{SS}$ to $V_{DD}$. All logic inputs have 1.8V logic compatible thresholds, which is compatible for both TTL and CMOS logic when operating with a valid supply voltage.

**Table 3-1. Package Information**

| PART NUMBER (1) | CHANNEL COUNT | PACKAGE (2) |
|---|---|---|
| TMUX4051 | 1-Channel | PW (TSSOP, 16) |
| TMUX4052 | 2-Channel | DYY (SOT-23-THIN, 16) |
| TMUX4053 | 3-Channel | BQB (WQFN, 16) |

(1) See the Device Comparison Table
(2) For more information, see Section 12.

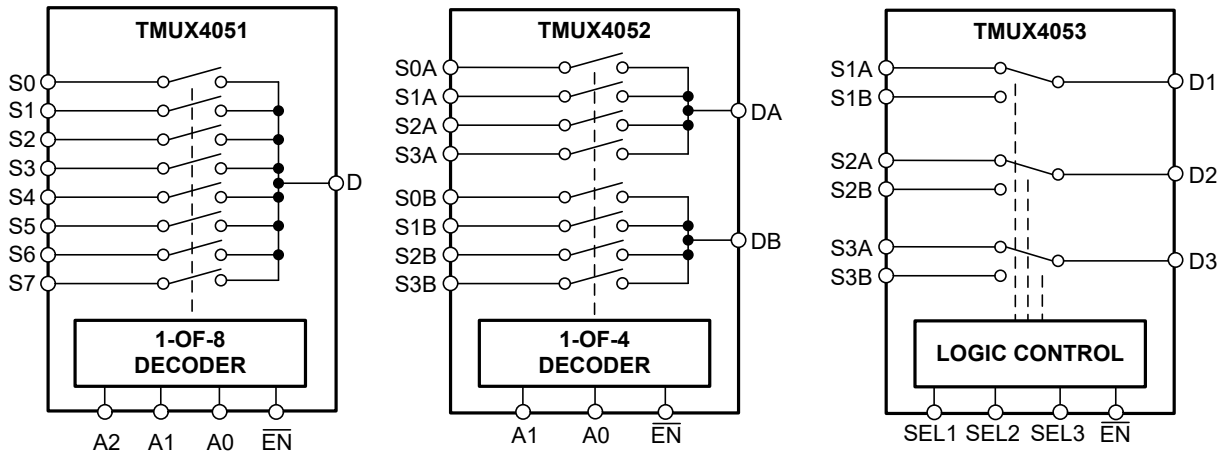


**TMUX4051, TMUX4052, and TMUX4053 Block Diagram**

An IMPORTANT NOTICE at the end of this data sheet addresses availability, warranty, changes, use in safety-critical applications, intellectual property matters and other important disclaimers. PRODUCTION DATA.

# Table of Contents

**1 Features**....1
**2 Applications**....1
**3 Description**....1
**4 Device Comparison Table**....3
**5 Pin Configuration and Functions**....4
**6 Specifications**....7
6.1 Absolute Maximum Ratings....7
6.2 ESD Ratings....7
6.3 Thermal Information: TMUX405x....8
6.4 Recommended Operating Conditions....8
6.5 Electrical Characteristics....9
6.6 AC Performance Characteristics....11
6.7 Timing Characteristics....12
6.8 Typical Characteristics....14
**7 Parameter Measurement Information**....16
7.1 On-Resistance....16
7.2 Off-Leakage Current....16
7.3 On-Leakage Current....17
7.4 Transition Time....17
7.5 Break-Before-Make....18
7.6 $t_{ON(EN)}$ and $t_{OFF(EN)}$....18
7.7 Propagation Delay....19
7.8 Charge Injection....19
7.9 Off Isolation....20
7.10 Crosstalk....20
7.11 Bandwidth....21
**8 Detailed Description**....22
8.1 Overview....22
8.2 Functional Block Diagram....22
8.3 Feature Description....22
**9 Application and Implementation**....24
9.1 Application Information....24
9.2 Typical Application....24
9.3 Design Requirements....25
9.4 Detailed Design Procedure....25
9.5 Application Curves....25
9.6 Power Supply Recommendations....25
9.7 Layout....26
**10 Device and Documentation Support**....27
10.1 Documentation Support....27
10.2 Receiving Notification of Documentation Updates....27
10.3 Support Resources....27
10.4 Trademarks....27
10.5 Electrostatic Discharge Caution....27
10.6 Glossary....27
**11 Revision History**....28
**12 Mechanical, Packaging, and Orderable Information**....28


Copyright © 2024 Texas Instruments Incorporated

## 4 Device Comparison Table

| PRODUCT | DESCRIPTION |
|---|---|
| TMUX4051 | 8:1, 1-channel multiplexer |
| TMUX4052 | 4:1, 2-channel multiplexer |
| TMUX4053 | 2:1, 3-channel switch |

Copyright © 2024 Texas Instruments Incorporated

# 5 Pin Configuration and Functions

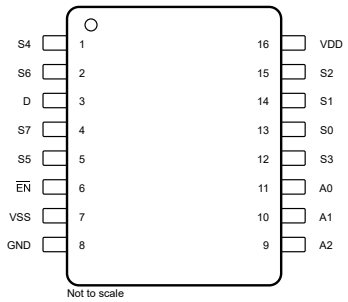


**Figure 5-1. TMUX4051 PW Package, 16-Pin TSSOP (Top View)**

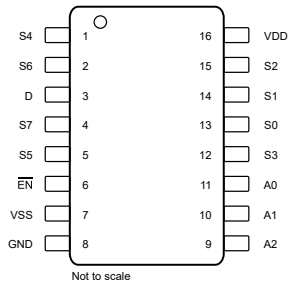


**Figure 5-2. TMUX4051 DYY Package, 16-Pin SOT-23-THIN (Top View)**

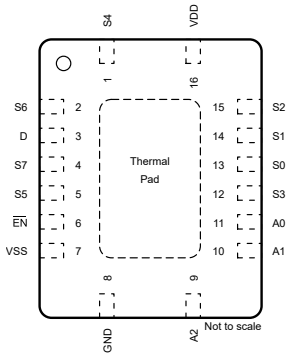


**Figure 5-3. TMUX4051 BQB Package, 16-Pin WQFN (Top View)**

**Table 5-1. Pin Functions TMUX4051**

| PIN | | TYPE[1] | DESCRIPTION[2] |
|---|---|---|---|
| NAME | NO. | | |
| S4 | 1 | I/O | Source pin 4. Signal path can be an input or output. |
| S6 | 2 | I/O | Source pin 6. Signal path can be an input or output. |
| D | 3 | I/O | Drain pin (common). Signal path can be an input or output. |
| S7 | 4 | I/O | Source pin 7. Signal path can be an input or output. |
| S5 | 5 | I/O | Source pin 5. Signal path can be an input or output. |
| $\overline{EN}$ | 6 | I | Active low logic enable. When this pin is high, all switches are turned off. Table 8-1 lists how the A[2:0] address inputs determine which switch is turned on when this pin is low. |
| $V_{SS}$ | 7 | P | Negative power supply. This pin is the most negative power-supply potential. For reliable operation, connect a decoupling capacitor ranging from 0.1µF to 10µF between $V_{SS}$ and GND. |
| GND | 8 | P | Ground (0V) reference |
| A2 | 9 | I | Address line 2. Table 8-1 provides information about how A2 controls the switch configuration. |
| A1 | 10 | I | Address line 1. Table 8-1 provides information about how A1 controls the switch configuration. |
| A0 | 11 | I | Address line 0. Table 8-1 provides information about how A0 controls the switch configuration. |
| S3 | 12 | I/O | Source pin 3. Signal path can be an input or output. |
| S0 | 13 | I/O | Source pin 0. Signal path can be an input or output. |
| S1 | 14 | I/O | Source pin 1. Signal path can be an input or output. |
| S2 | 15 | I/O | Source pin 2. Signal path can be an input or output. |
| $V_{DD}$ | 16 | P | Positive power supply. This pin is the most positive power-supply potential. For reliable operation, connect a decoupling capacitor ranging from 0.1µF to 10µF between $V_{DD}$ and GND. |
| Thermal pad | | — | The thermal pad is not connected internally. It is recommended that the pad be left floating or tied to GND. |

(1) I = input, O = output, I/O = input and output, P = power.
(2) For what to do with unused pins, refer to Section 8.3.4.


Copyright © 2024 Texas Instruments Incorporated

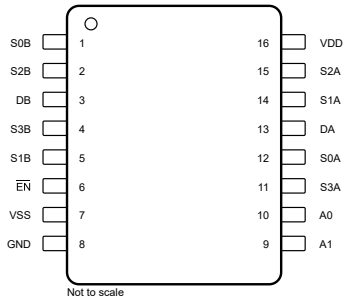


**Figure 5-4. TMUX4052 PW Package, 16-Pin TSSOP (Top View)**

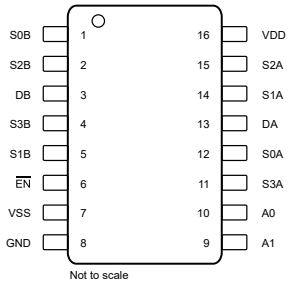


**Figure 5-5. TMUX4052 DYY Package, 16-Pin SOT-23-THIN (Top View)**

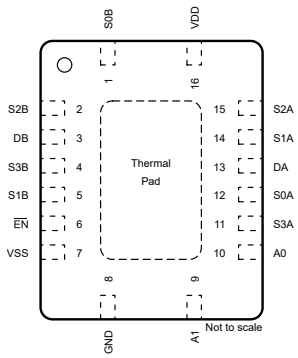


**Figure 5-6. TMUX4052 BQB Package, 16-Pin WQFN (Top View)**

**Table 5-2. Pin Functions TMUX4052**

| PIN | | TYPE[1] | DESCRIPTION[2] |
|---|---|---|---|
| NAME | NO. | | |
| S0B | 1 | I/O | Source pin 0 of mux B. Can be an input or output. |
| S2B | 2 | I/O | Source pin 2 of mux B. Can be an input or output. |
| DB | 3 | I/O | Drain pin (common) of mux B. Can be an input or output. |
| S3B | 4 | I/O | Source pin 3 of mux B. Can be an input or output. |
| S1B | 5 | I/O | Source pin 1 of mux B. Can be an input or output. |
| $\overline{EN}$ | 6 | I | Active low logic enable. When this pin is high, all switches are turned off. When this pin is low, the A[1:0] address inputs determine which switch is turned on. |
| $V_{SS}$ | 7 | P | Negative power supply. This pin is the most negative power-supply potential. For reliable operation, connect a decoupling capacitor ranging from 0.1µF to 10µF between $V_{SS}$ and GND. |
| GND | 8 | P | Ground (0V) reference |
| A1 | 9 | I | Address line 1. Table 8-2 provides information about how A1 controls the switch configuration. |
| A0 | 10 | I | Address line 0. Table 8-2 provides information about how A0 controls the switch configuration. |
| S3A | 11 | I/O | Source pin 3 of mux A. Can be an input or output. |
| S0A | 12 | I/O | Source pin 0 of mux A. Can be an input or output. |
| DA | 13 | I/O | Drain pin (common) of mux A. Can be an input or output. |
| S1A | 14 | I/O | Source pin 1 of mux A. Can be an input or output. |
| S2A | 15 | I/O | Source pin 2 of mux A. Can be an input or output. |
| $V_{DD}$ | 16 | P | Positive power supply. This pin is the most positive power-supply potential. For reliable operation, connect a decoupling capacitor ranging from 0.1µF to 10µF between $V_{DD}$ and GND. |
| Thermal pad | | — | The thermal pad is not connected internally. It is recommended that the pad be left floating or tied to GND. |

(1) I = input, O = output, I/O = input and output, P = power.
(2) For what to do with unused pins, refer to Section 8.3.4 .

Copyright © 2024 Texas Instruments Incorporated

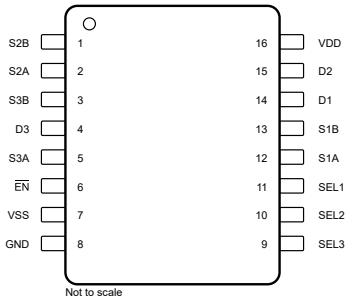


**Figure 5-7. TMUX4053 PW Package, 16-Pin TSSOP (Top View)**

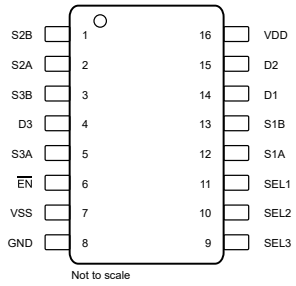


**Figure 5-8. TMUX4053 DYY Package, 16-Pin SOT-23-THIN (Top View)**

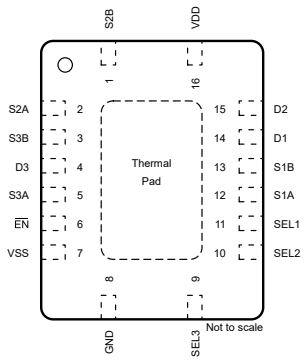


**Figure 5-9. TMUX4053 BQB Package, 16-Pin WQFN (Top View)**

**Table 5-3. Pin Functions TMUX4053**

| PIN | | TYPE[1] | DESCRIPTION[2] |
|---|---|---|---|
| NAME | NO. | | |
| S2B | 1 | I/O | Source pin B of switch 2. Can be an input or output. |
| S2A | 2 | I/O | Source pin A of switch 2. Can be an input or output. |
| S3B | 3 | I/O | Source pin B of switch 3. Can be an input or output. |
| D3 | 4 | I/O | Drain pin (common) of switch 3. Can be an input or output. |
| S3A | 5 | I/O | Source pin A of switch 3. Can be an input or output. |
| $\overline{EN}$ | 6 | I | Active low logic enable. When this pin is high, all switches are turned off. When this pin is low, the SEL[x] logic control inputs determine which switch is turned on. |
| $V_{SS}$ | 7 | P | Negative power supply. This pin is the most negative power-supply potential. For reliable operation, connect a decoupling capacitor ranging from 0.1µF to 10µF between $V_{SS}$ and GND. |
| GND | 8 | P | Ground (0V) reference |
| SEL3 | 9 | I | Logic control select pin 3. Table 8-2 provides controls switch 3 configuration. |
| SEL2 | 10 | I | Logic control select pin 2. Table 8-2 provides controls switch 2 configuration. |
| SEL1 | 11 | I | Logic control select pin 1. Table 8-2 provides controls switch 1 configuration. |
| S1A | 12 | I/O | Source pin A of switch 1. Can be an input or output. |
| S1B | 13 | I/O | Source pin B of switch 1. Can be an input or output. |
| D1 | 14 | I/O | Drain pin (common) of switch 1. Can be an input or output. |
| D2 | 15 | I/O | Drain pin (common) of switch 2. Can be an input or output. |
| $V_{DD}$ | 16 | P | Positive power supply. This pin is the most positive power-supply potential. For reliable operation, connect a decoupling capacitor ranging from 0.1µF to 10µF between $V_{DD}$ and GND. |
| Thermal pad | | — | The thermal pad is not connected internally. It is recommended that the pad be left floating or tied to GND. |

(1) I = input, O = output, I/O = input and output, P = power.
(2) For what to do with unused pins, refer to Section 8.3.4.


Copyright © 2024 Texas Instruments Incorporated

# 6 Specifications

## 6.1 Absolute Maximum Ratings

over operating free-air temperature range (unless otherwise noted)(1) (3)

| | | MIN | MAX | UNIT |
|---|---|---|---|---|
| $V_{DD} - V_{SS}$ | Supply voltage | | 28 | V |
| $V_{DD}$ | | –0.5 | 28 | V |
| $V_{SS}$ | | –28 | 0.5 | V |
| $V_{SEL}$ or $V_{EN}$ | Logic control input pin voltage ($\overline{EN}$, Ax, SELx) | –0.5 | 28 | V |
| $I_{SEL}$ or $I_{EN}$ | Logic control input pin current ($\overline{EN}$, Ax, SELx) | –0.5 | 28 | mA |
| $V_S$ or $V_D$ | Source or drain voltage (Sx, D) | $V_{SS}$–0.5 | $V_{DD}$+0.5 | V |
| $I_{IK}$ | Diode clamp current(2) | –30 | 30 | mA |
| $I_S$ or $I_{D\ (CONT)}$ | Source or drain continuous current (Sx, D) | –10 | 10 | mA |
| $T_J$ | Junction temperature | | 150 | °C |
| $T_{stg}$ | Storage temperature | –65 | 150 | °C |

(1) Operation outside the *Absolute Maximum Ratings* may cause permanent device damage. Absolute maximum ratings do not imply functional operation of the device at these or any other conditions beyond those listed under *Recommended Operating Conditions*. If briefly operating outside the *Recommended Operating Conditions* but within the *Absolute Maximum Ratings*, the device may not sustain damage, but it may not be fully functional. Operating the device in this manner may affect device reliability, functionality, performance, and shorten the device lifetime.
(2) Pins are diode-clamped to the power-supply rails. Over voltage signals must be voltage and current limited to maximum ratings.
(3) To avoid drawing excess current from $V_{DD}$, or into $V_{SS}$, the voltage drop across the bidirectional switch path ($\Delta V_{switch}$) must not exceed 1.2V (600mV for high temperature).

## 6.2 ESD Ratings

| | | | VALUE | UNIT |
|---|---|---|---|---|
| $V_{(ESD)}$ | Electrostatic discharge | Human body model (HBM), per ANSI/ESDA/JEDEC JS-001, all pins(1) | ±2000 | V |
| | | Charged device model (CDM), per ANSI/ESDA/JEDEC JS-002, all pins(2) | ±500 | |

(1) JEDEC document JEP155 states that 500V HBM allows safe manufacturing with a standard ESD control process.
(2) JEDEC document JEP157 states that 250V CDM allows safe manufacturing with a standard ESD control process.

Copyright © 2024 Texas Instruments Incorporated

## 6.3 Thermal Information: TMUX405x

| THERMAL METRIC[1] | | TMUX4051 / TMUX4052 / TMUX4053 | | | UNIT |
|---|---|---|---|---|---|
| | | PW (TSSOP) | DYY (SOT) | BQB (WQFN) | |
| | | 16 PINS | 16 PINS | 16 PINS | |
| $R_{\theta JA}$ | Junction-to-ambient thermal resistance | 116.5 | 138.9 | 70.5 | °C/W |
| $R_{\theta JC(top)}$ | Junction-to-case (top) thermal resistance | 47.2 | 70.3 | 67.8 | °C/W |
| $R_{\theta JB}$ | Junction-to-board thermal resistance | 63.0 | 69.1 | 40.2 | °C/W |
| $\Psi_{JT}$ | Junction-to-top characterization parameter | 6.4 | 5.1 | 3.9 | °C/W |
| $\Psi_{JB}$ | Junction-to-board characterization parameter | 62.1 | 69.0 | 40.2 | °C/W |
| $R_{\theta JC(bot)}$ | Junction-to-case (bottom) thermal resistance | N/A | N/A | 18.7 | °C/W |

(1) For more information about traditional and new thermal metrics, see the Semiconductor and IC Package Thermal Metrics application report.

## 6.4 Recommended Operating Conditions

over operating free-air temperature range (unless otherwise noted)

| | | MIN | NOM | MAX | UNIT |
|---|---|---|---|---|---|
| $V_{DD} – V_{SS}$ [1] | Power supply voltage differential | 5 | | 24 | V |
| $V_{DD}$ | Positive power supply voltage | 5 | | 24 | V |
| $V_{SS}$ | Negative power supply voltage | –15 | | 0 | V |
| $V_S$ or $V_D$ | Signal path input/output voltage (source or drain pin) (Sx, D) | $V_{SS}$ | | $V_{DD}$ | V |
| $V_{Ax}$ or $V_{EN}$ | Address or enable pin voltage | 0 | | $V_{DD}$ | V |
| $I_S$ or $I_{D\ (CONT)}$ | Source or drain continuous current (Sx, D) | –10 | | 10 | mA |
| $T_A$ | Ambient temperature | –55 | | 125 | °C |

(1) $V_{DD}$ and $V_{SS}$ can be any value as long as $5V \le (V_{DD} – V_{SS}) \le 24V$, and the minimum $V_{DD}$ and $V_{SS}$ are met.


Copyright © 2024 Texas Instruments Incorporated

## 6.5 Electrical Characteristics

Over operating free-air temperature range,
Typical at $T_A$ = 25°C (unless otherwise noted)

| PARAMETER | TEST CONDITIONS | $V_{DD}$ | $V_{SS}$ | $T_A$ | MIN | TYP | MAX | UNIT |
|---|---|---|---|---|---|---|---|---|
| **POWER SUPPLY** | | | | | | | | |
| Supply current $I_{DD}$ | Address inputs = 0V, 5V, or $V_{DD}$ $\overline{EN}$ = 0V | 5V | 0V | –55°C | | | 60 | µA |
| | | | | 25°C | | 17 | 60 | |
| | | | | 85°C | | | 80 | |
| | | | | 125°C | | | 80 | |
| | Address inputs = 0V, 5V, or $V_{DD}$ $\overline{EN}$ = 0V | 10V | 0V | –55°C | | | 60 | |
| | | | | 25°C | | 18 | 60 | |
| | | | | 85°C | | | 80 | |
| | | | | 125°C | | | 80 | |
| | Address inputs = 0V, 5V, or $V_{DD}$ $\overline{EN}$ = 0V | 24V | 0V | –55°C | | | 60 | |
| | | | | 25°C | | 21 | 60 | |
| | | | | 85°C | | | 80 | |
| | | | | 125°C | | | 80 | |
| | Address inputs = 0V, 5V, or $V_{DD}$ $\overline{EN}$ = 0V | 5V | –5V | –55°C | | | 60 | |
| | | | | 25°C | | 18 | 60 | |
| | | | | 85°C | | | 80 | |
| | | | | 125°C | | | 80 | |
| | Address inputs = 0V, 5V, or $V_{DD}$ $\overline{EN}$ = 0V | 12V | –12V | –55°C | | | 60 | |
| | | | | 25°C | | 20 | 60 | |
| | | | | 85°C | | | 80 | |
| | | | | 125°C | | | 80 | |
| Negative supply current $I_{SS}$ | Address inputs = 0V, 5V, or $V_{DD}$ $\overline{EN}$ = 0V | 5V | –5V | –55°C | | | 20 | µA |
| | | | | 25°C | | 6 | 20 | |
| | | | | 85°C | | | 25 | |
| | | | | 125°C | | | 25 | |
| | Address inputs = 0V, 5V, or $V_{DD}$ $\overline{EN}$ = 0V | 12V | –12V | –55°C | | | 22 | |
| | | | | 25°C | | 7 | 22 | |
| | | | | 85°C | | | 26 | |
| | | | | 125°C | | | 26 | |
| $I_{DD}$ disable | $\overline{EN}$ = 5V or $V_{DD}$ | All | | 25°C | | 8 | | µA |
| | | | | –55°C to 125°C | | | 20 | |

Copyright © 2024 Texas Instruments Incorporated

## 6.5 Electrical Characteristics (continued)

Over operating free-air temperature range,
Typical at $T_A$ = 25°C (unless otherwise noted)

| PARAMETER | TEST CONDITIONS | $V_{DD}$ | $V_{SS}$ | $T_A$ | MIN | TYP | MAX | UNIT |
|---|---|---|---|---|---|---|---|---|
| **ANALOG SWITCH** | | | | | | | | |
| $R_{ON}$ Source to Drain ON-Resistance | $V_S$ = $V_{SS}$ to $V_{DD}$, $I_D$ = –1mA | 5V | 0V | –55°C | | | 800 | Ω |
| | | | | 25°C | | 75 | 1050 | |
| | | | | 85°C | | | 1200 | |
| | | | | 125°C | | | 1300 | |
| | $V_S$ = $V_{SS}$ to $V_{DD}$, $I_D$ = –1mA | 10V | 0V | –55°C | | | 310 | |
| | | | | 25°C | | 60 | 400 | |
| | | | | 85°C | | | 520 | |
| | | | | 125°C | | | 550 | |
| | $V_S$ = $V_{SS}$ to $V_{DD}$, $I_D$ = –1mA | 24V | 0V | –55°C | | | 200 | |
| | | | | 25°C | | 60 | 240 | |
| | | | | 85°C | | | 300 | |
| | | | | 125°C | | | 300 | |
| | $V_S$ = $V_{SS}$ to $V_{DD}$, $I_D$ = –1mA | 5V | –5V | –55°C | | | 310 | |
| | | | | 25°C | | 60 | 400 | |
| | | | | 85°C | | | 520 | |
| | | | | 125°C | | | 550 | |
| | $V_S$ = $V_{SS}$ to $V_{DD}$, $I_D$ = –1mA | 12V | –12V | –55°C | | | 200 | |
| | | | | 25°C | | 60 | 240 | |
| | | | | 85°C | | | 300 | |
| | | | | 125°C | | | 300 | |
| $\Delta R_{ON}$ | $V_S$ = $V_{SS}$ to $V_{DD}$, $I_D$ = –1mA | All | | 25°C | | 2 | | Ω |
| $R_{ON\ FLAT}$ | $V_S$ = $V_{SS}$ to $V_{DD}$, $I_D$ = –1mA | All | | 25°C | | 60 | | Ω |
| | | | | –55°C to 85°C | | | 150 | |
| | | | | –55°C to 125°C | | | 150 | |
| $I_{S(OFF)}$ $I_{D(OFF)}$ | Switch State is off $V_S$ = $V_{SS}$ / $V_{DD}$ $V_D$ = $V_{DD}$ / $V_{SS}$ | 24V | 0V | 25°C | | ±0.3 | ±100 | nA |
| | | | | –55°C to 85°C | | | ±200 | |
| | | | | –55°C to 125°C | | | ±1000 | |
| $I_{ON}$ | Switch State is on $V_S$ = $V_D$ = $V_{SS}$ or $V_{DD}$ | 24V | 0V | 25°C | | ±0.3 | ±100 | nA |
| | | | | –55°C to 85°C | | | ±200 | |
| | | | | –55°C to 125°C | | | ±1000 | |
| **LOGIC INPUTS (ADDRESS / ENABLE pins)** | | | | | | | | |
| $V_{IH}$ | Input High Voltage | All | | –55°C to 125°C | 1.35 | | $V_{DD}$ | V |
| $V_{IL}$ | Input Low Voltage | All | | –55°C to 125°C | 0 | | 0.8 | V |
| $I_{IH}$ $I_{IL}$ Logic Input Current | $V_{LOGIC}$ = 0V, 5V, or $V_{DD}$ | All | | 25°C | | ±0.6 | | µA |
| | | | | –55°C to 125°C | –1 | | 1 | |
| $C_{IN}$ | | All | | 25°C | | 2 | | pF |


Copyright © 2024 Texas Instruments Incorporated

## 6.6 AC Performance Characteristics

Typical at $T_A$ = 25°C (unless otherwise noted)

| PARAMETER | TEST CONDITIONS | | | | $T_A$ = –55°C to 125°C | | | UNIT |
|---|---|---|---|---|---|---|---|---|
| | CONDITION | $V_{DD}$ | $V_{SS}$ | GPN | MIN | TYP | MAX | |
| **CAPACITANCE** | | | | | | | | |
| $C_{S(OFF)}$ | $V_S$ = ($V_{DD}$ + $V_{SS}$) / 2V<br>f = 1MHz | 5V | –5V | All | | 3 | | pF |
| | | 24V | 0V | | | 3 | | |
| $C_{D(OFF)}$ | $V_S$ = ($V_{DD}$ + $V_{SS}$) / 2V<br>f = 1MHz | 5V | –5V | TMUX4051 | | 11 | | pF |
| | | 24V | 0V | | | 9 | | |
| | | 5V | –5V | TMUX4052 | | 6 | | |
| | | 24V | 0V | | | 5 | | |
| | | 5V | –5V | TMUX4053 | | 4 | | |
| | | 24V | 0V | | | 3 | | |
| $C_{S(ON)}$<br>$C_{D(ON)}$ | $V_S$ = ($V_{DD}$ + $V_{SS}$) / 2V<br>f = 1MHz | 5V | –5V | TMUX4051 | | 13 | | pF |
| | | 24V | 0V | | | 11 | | |
| | | 5V | –5V | TMUX4052 | | 8 | | |
| | | 24V | 0V | | | 7 | | |
| | | 5V | –5V | TMUX4053 | | 10 | | |
| | | 24V | 0V | | | 5 | | |
| **DYNAMIC CHARACTERISTICS** | | | | | | | | |
| Bandwidth (BW)<br>(Sine Wave Input) | $V_{BIAS}$ = ($V_{DD}$ + $V_{SS}$) / 2 (1)<br>$V_S$ = 200mVpp<br>$R_L$ = 50Ω, $C_L$ = 5pF | +5V | –5V | TMUX4051 | | 280 | | MHz |
| | | 24V | 0V | | | 430 | | |
| | | +5V | –5V | TMUX4052 | | 600 | | |
| | | 24V | 0V | | | 700 | | |
| | | +5V | –5V | TMUX4053 | | 750 | | |
| | | 24V | 0V | | | 850 | | |
| Off Isolation<br>Channel OFF<br>(Sine Wave Input) | $V_{BIAS}$ = ($V_{DD}$ + $V_{SS}$) / 2 (1)<br>$V_S$ = 200mVpp<br>$R_L$ = 50Ω, $C_L$ = 5pF<br>f = 1MHz | +5V | –5V | All | | –95 | | dB |
| | | 24V | 0V | | | –95 | | |
| Crosstalk<br>(Sine Wave Input) | $V_{BIAS}$ = ($V_{DD}$ + $V_{SS}$) / 2 (1)<br>$V_S$ = 200mVpp<br>$R_L$ = 50Ω, $C_L$ = 5pF<br>f = 1MHz | +5V | –5V | All | | –90 | | dB |
| | | 24V | 0V | | | –90 | | |
| Charge Injection | $V_S$ = ($V_{DD}$ + $V_{SS}$) / 2<br>$R_S$ = 0Ω, $C_L$ = 100pF | +5V | –5V | TMUX4051 | | 6 | | pC |
| | | 24V | 0V | | | 2 | | |

(1) Peak-to-Peak voltage symmetrical about ($V_{DD}$ + $V_{SS}$) / 2.

Copyright © 2024 Texas Instruments Incorporated

## 6.7 Timing Characteristics

Over operating free-air temperature range,
Typical at $T_A$ = 25°C (unless otherwise noted)

| PARAMETER | | TEST CONDITIONS | | | | MIN | TYP | MAX | UNIT |
|---|---|---|---|---|---|---|---|---|---|
| | | CONDITION | $V_{DD}$ | $V_{SS}$ | $T_A$ | | | | |
| Prop Delay | Signal Input to Signal Output | $V_S$ = $V_{SS}$ to $V_{DD}$ | 5V | 0V | 25°C | | 4 | 20 | ns |
| | | | 10V | 0V | 25°C | | 4 | 20 | |
| | | | 24V | 0V | 25°C | | 3 | 20 | |
| | | | 5V | –5V | 25°C | | 4 | 20 | |
| | | | 12V | –12V | 25°C | | 3 | 20 | |
| $t_{TRAN}$ | Address-to-Signal OUT Transition time between inputs | $t_r$ , $t_f$ = 20ns, $C_L$ = 50pF, $R_L$ = 10kΩ | 5V | 0V | 25°C | | 105 | | ns |
| | | | | | –55°C to +125°C | | | 190 | |
| | | | 10V | 0V | 25°C | | 100 | | |
| | | | | | –55°C to +125°C | | | 190 | |
| | | | 24V | 0V | 25°C | | 110 | | |
| | | | | | –55°C to +125°C | | | 230 | |
| | | | 5V | –5V | 25°C | | 100 | | |
| | | | | | –55°C to +125°C | | | 190 | |
| | | | 12V | –12V | 25°C | | 100 | | |
| | | | | | –55°C to +125°C | | | 190 | |
| $t_{ON (EN)}$ | Enable-to-Signal OUT Channel turning ON | $t_r$ , $t_f$ = 20ns, $C_L$ = 50pF, $R_L$ = 10kΩ | 5V | 0V | 25°C | | 100 | | ns |
| | | | | | –55°C to +125°C | | | 190 | |
| | | | 10V | 0V | 25°C | | 95 | | |
| | | | | | –55°C to +125°C | | | 190 | |
| | | | 24V | 0V | 25°C | | 110 | | |
| | | | | | –55°C to +125°C | | | 230 | |
| | | | 5V | –5V | 25°C | | 100 | | |
| | | | | | –55°C to +125°C | | | 190 | |
| | | | 12V | –12V | 25°C | | 100 | | |
| | | | | | –55°C to +125°C | | | 190 | |
| $t_{OFF (EN)}$ | Enable-to-Signal OUT Channel turning OFF | $t_r$ , $t_f$ = 20ns, $C_L$ = 50pF, $R_L$ = 10kΩ | 5V | 0V | 25°C | | 90 | | ns |
| | | | | | –55°C to +125°C | | | 140 | |
| | | | 10V | 0V | 25°C | | 90 | | |
| | | | | | –55°C to +125°C | | | 140 | |
| | | | 24V | 0V | 25°C | | 85 | | |
| | | | | | –55°C to +125°C | | | 140 | |
| | | | 5V | –5V | 25°C | | 100 | | |
| | | | | | –55°C to +125°C | | | 160 | |
| | | | 12V | –12V | 25°C | | 90 | | |
| | | | | | –55°C to +125°C | | | 140 | |


Copyright © 2024 Texas Instruments Incorporated

## 6.7 Timing Characteristics (continued)

Over operating free-air temperature range,
Typical at $T_A$ = 25°C (unless otherwise noted)

| PARAMETER | | TEST CONDITIONS | | | | MIN | TYP | MAX | UNIT |
|---|---|---|---|---|---|---|---|---|---|
| | | CONDITION | $V_{DD}$ | $V_{SS}$ | $T_A$ | | | | |
| $t_{BBM}$ | | $C_L$ = 15pF, $R_L$ = 10kΩ | 5V | 0V | 25°C | | 60 | | ns |
| | | | | | –55°C to +125°C | 1 | | | |
| | | | 10V | 0V | 25°C | | 45 | | |
| | | | | | –55°C to +125°C | 1 | | | |
| | | | 5V | –5V | 25°C | | 45 | | |
| | | | | | –55°C to +125°C | 1 | | | |
| | | | 12V | –12V | 25°C | | 55 | | |
| | | | | | –55°C to +125°C | 1 | | | |
| | | | 24V | 0V | 25°C | | 75 | | |
| | | | | | –55°C to +125°C | 1 | | | |

Copyright © 2024 Texas Instruments Incorporated

## 6.8 Typical Characteristics

at $T_A$ = 25°C, $V_{DD}$ = 5V (unless otherwise noted)

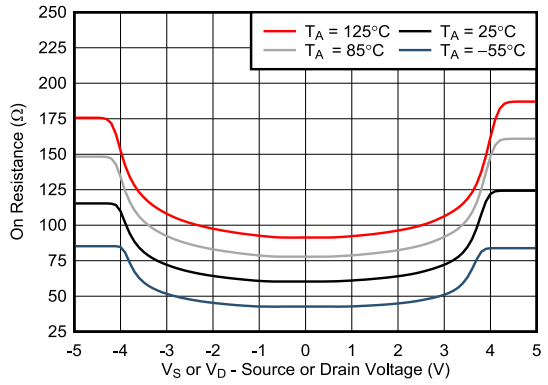


$V_{DD}$ = 5V, $V_{SS}$ = -5V

**Figure 6-1. On-Resistance vs Temperature**

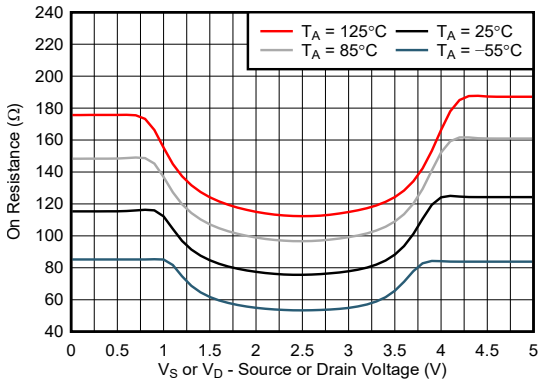


$V_{DD}$ = 5V

**Figure 6-2. On-Resistance vs Temperature**

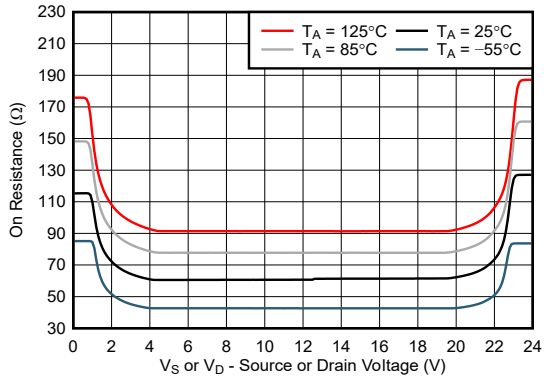


$V_{DD}$ = 24V

**Figure 6-3. On-Resistance vs Temperature**

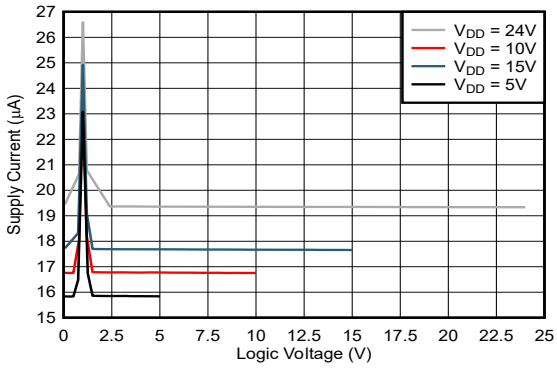


**Figure 6-4. Supply Current vs Logic Voltage**

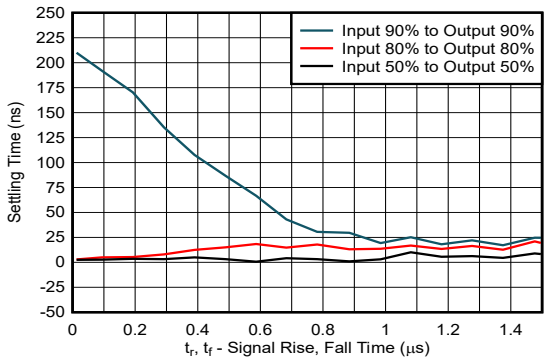


$V_{DD}$ = 5V, $V_{signal}$ = 5V

$R_L$ = 200kΩ, $C_L$ = 15pF

**Figure 6-5. System Settling Time**

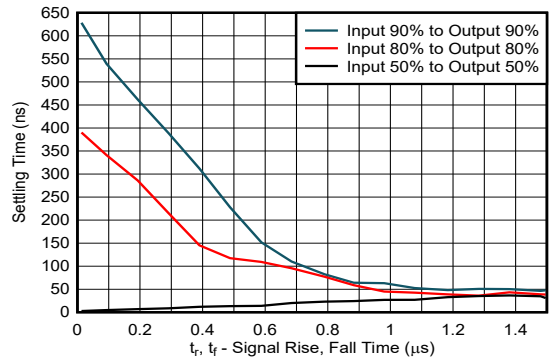


$V_{DD}$ = 5V, $V_{signal}$ = 5V

$R_L$ = 10kΩ, $C_L$ = 15pF

**Figure 6-6. System Settling Time**


Copyright © 2024 Texas Instruments Incorporated

## 6.8 Typical Characteristics (continued)

at $T_A$ = 25°C, $V_{DD}$ = 5V (unless otherwise noted)

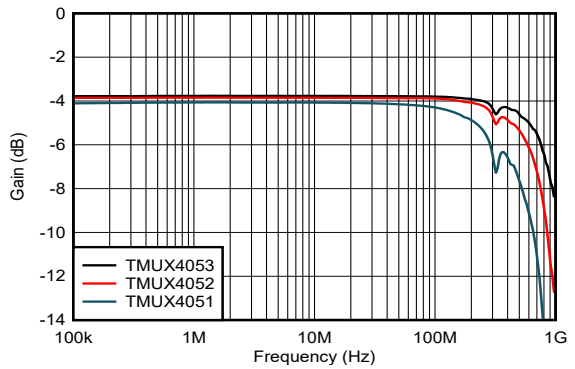


$V_{DD}$ = 12V, $V_{SS}$ = -12V

**Figure 6-7. On Response vs Frequency**

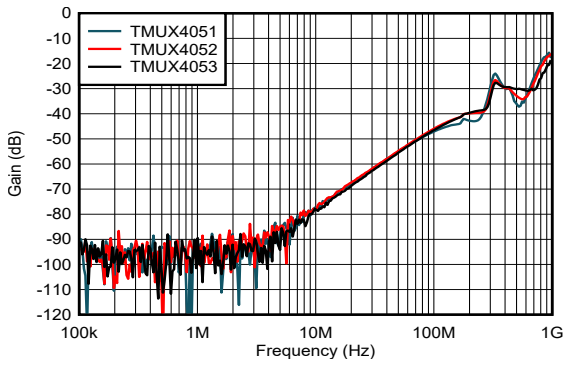


$V_{DD}$ = 12V, $V_{SS}$ = -12V

**Figure 6-8. Off-Isolation vs Frequency**

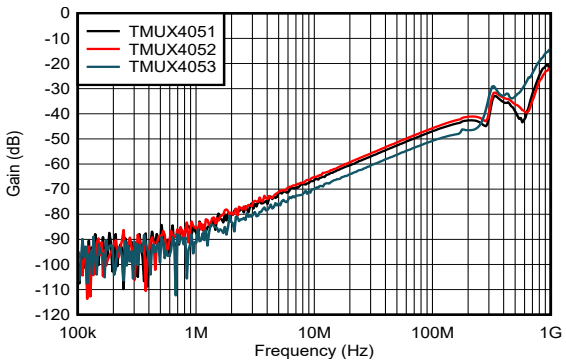


$V_{DD}$ = 12V, $V_{SS}$ = -12V

**Figure 6-9. Xtalk vs Frequency**

# 7 Parameter Measurement Information

## 7.1 On-Resistance

The on-resistance of a device is the ohmic resistance between the source (Sx) and drain (D) pins of the device. The on-resistance varies with input voltage and supply voltage. The symbol $R_{ON}$ is used to denote on-resistance. The measurement setup used to measure $R_{ON}$ is shown in the following figure. Figure 7-1 shows how the $R_{ON}$ is computed with $R_{ON}$ = V / $I_{SD}$, and the voltage (V) and current ($I_{SD}$) are measured using this setup.

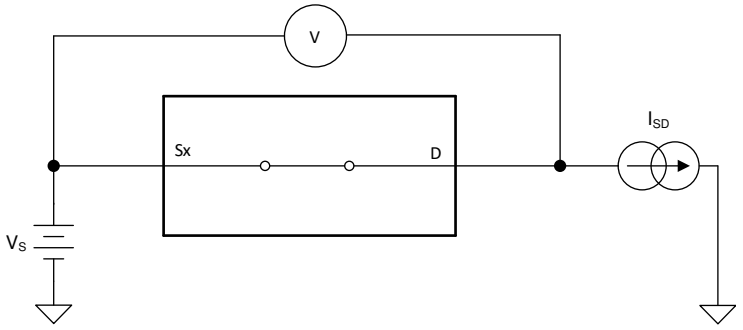


**Figure 7-1. On-Resistance Measurement Setup**

## 7.2 Off-Leakage Current

There are two types of leakage currents associated with a switch during the off state:

1. Source off-leakage current.
2. Drain off-leakage current.

Source leakage current is defined as the leakage current flowing into or out of the source pin when the switch is off. This current is denoted by the symbol $I_{S(OFF)}$.

Drain leakage current is defined as the leakage current flowing into or out of the drain pin when the switch is off. This current is denoted by the symbol $I_{D(OFF)}$.

Figure 7-2 shows the setup used to measure both off-leakage currents.

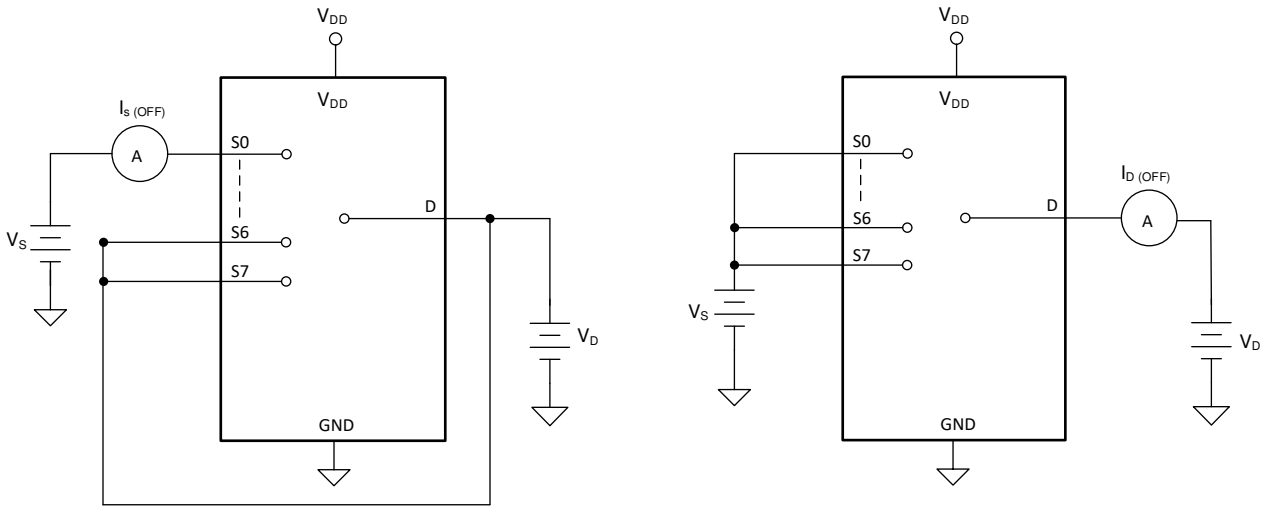


**Figure 7-2. Off-Leakage Measurement Setup**


Copyright © 2024 Texas Instruments Incorporated

## 7.3 On-Leakage Current

Source on-leakage current is defined as the leakage current flowing into or out of the source pin when the switch is on. This current is denoted by the symbol $I_{S(ON)}$.

Drain on-leakage current is defined as the leakage current flowing into or out of the drain pin when the switch is on. This current is denoted by the symbol $I_{D(ON)}$.

Either the source pin or drain pin is left floating during the measurement. Figure 7-3 shows the circuit used for measuring the on-leakage current, denoted by $I_{S(ON)}$ or $I_{D(ON)}$.

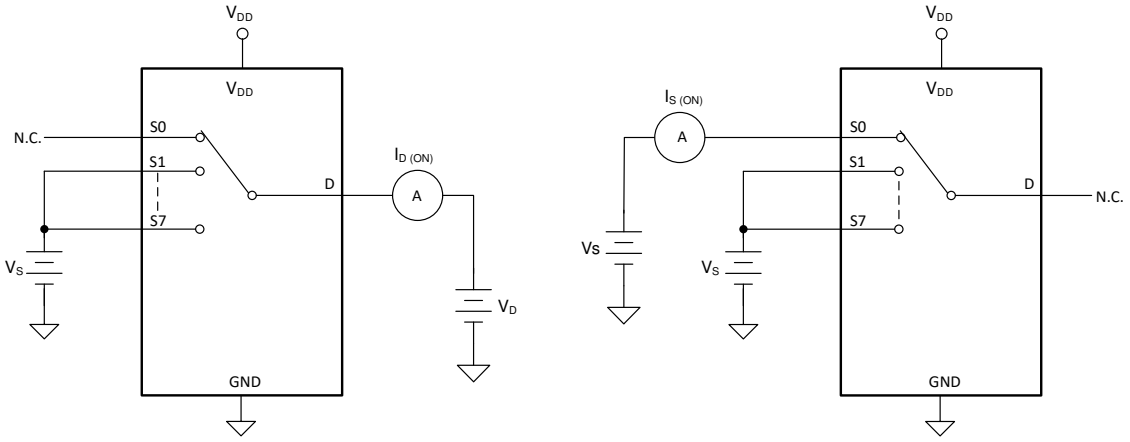


**Figure 7-3. On-Leakage Measurement Setup**

## 7.4 Transition Time

Transition time is defined as the time taken by the output of the device to rise or fall 10% after the address signal has risen or fallen past the 50% threshold. Figure 7-4 shows the setup used to measure transition time, denoted by the symbol $t_{TRANSITION}$.

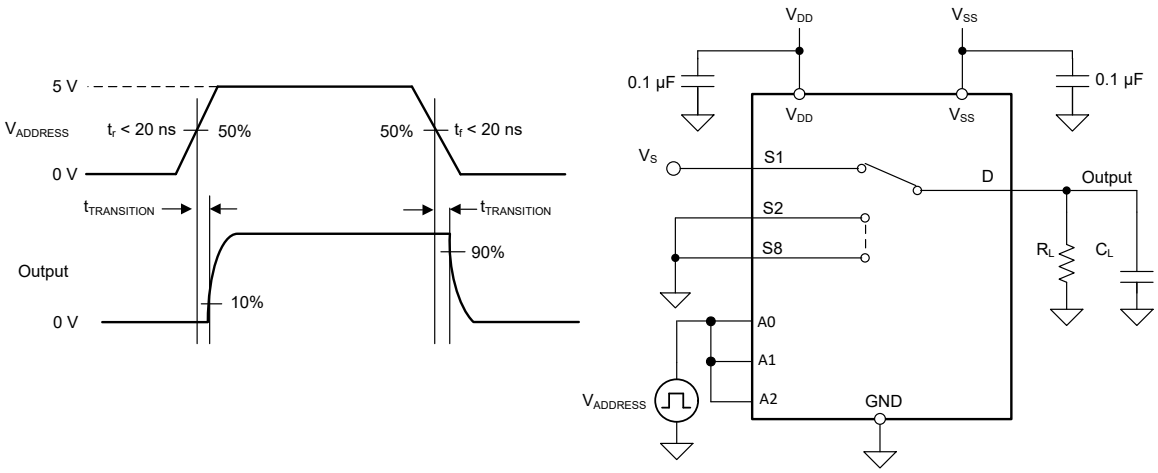


**Figure 7-4. Transition-Time Measurement Setup**

## 7.5 Break-Before-Make

Break-before-make delay is a safety feature that prevents two inputs from connecting when the device is switching. The output first breaks from the on-state switch before making the connection with the next on-state switch. The time delay between the *break* and the *make* is known as break-before-make delay. Figure 7-5 shows the setup used to measure break-before-make delay, denoted by the symbol $t_{OPEN(BBM)}$.

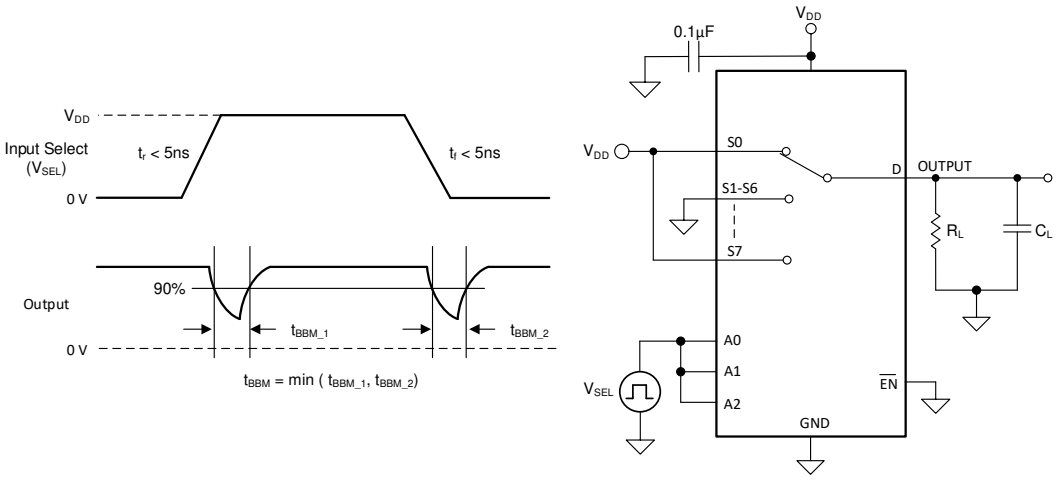


**Figure 7-5. Break-Before-Make Delay Measurement Setup**

## 7.6 $t_{ON(EN)}$ and $t_{OFF(EN)}$

Turn-on time is defined as the time taken by the output of the device to rise to 10% after the enable has risen past the 50% threshold. The 10% measurement is utilized to provide the timing of the device, system level timing can then account for the time constant added from the load resistance and load capacitance. Figure 7-6 shows the setup used to measure transition time, denoted by the symbol $t_{ON(EN)}$.

Turn-off time is defined as the time taken by the output of the device to fall to 90% after the enable has fallen past the 50% threshold. The 90% measurement is utilized to provide the timing of the device, system level timing can then account for the time constant added from the load resistance and load capacitance. Figure 7-6 shows the setup used to measure transition time, denoted by the symbol $t_{OFF(EN)}$.

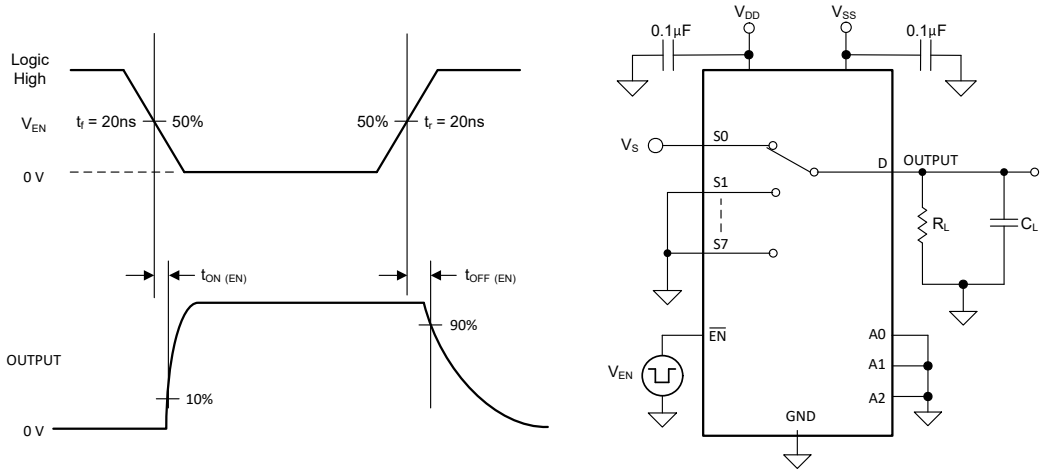


**Figure 7-6. Turn-On and Turn-Off Time Measurement Setup**


Copyright © 2024 Texas Instruments Incorporated

## 7.7 Propagation Delay

Propagation delay is defined as the time taken by the output of the device to rise or fall 50% after the input signal has risen or fallen past the 50% threshold. Figure 7-7 shows the setup used to measure propagation delay, denoted by the symbol $t_{PD}$.

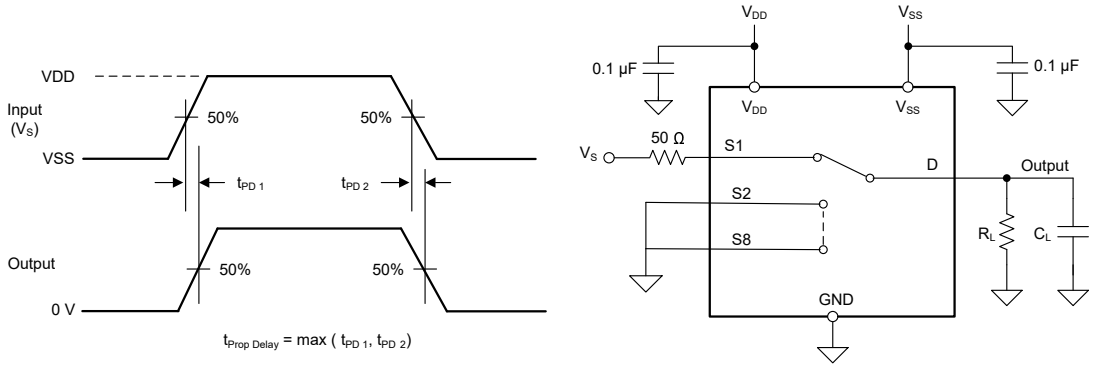


**Figure 7-7. Propagation Delay Measurement Setup**

## 7.8 Charge Injection

Any mismatch in capacitance between the NMOS and PMOS transistors results in a charge injected into the drain or source during the falling or rising edge of the gate signal. The amount of charge injected into the source or drain of the device is known as charge injection, and is denoted by the symbol $Q_C$. Figure 7-8 shows the setup used to measure charge injection from source (Sx) to drain (D).

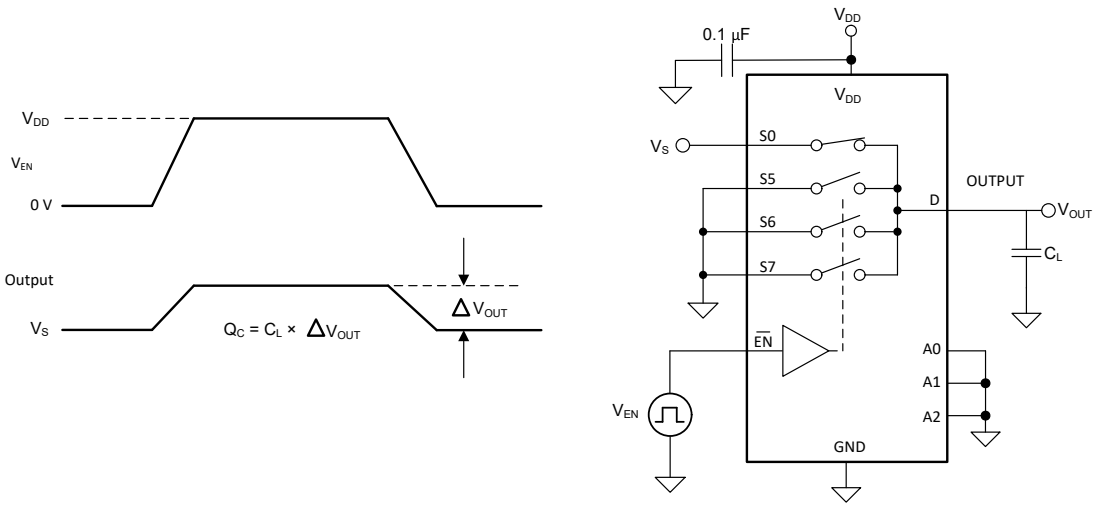


**Figure 7-8. Charge-Injection Measurement Setup**

## 7.9 Off Isolation

Off isolation is defined as the ratio of the signal at the drain pin (D) of the device when a signal is applied to the source pin (Sx) of an off-channel. Figure 7-9 shows the setup used to measure, and the equation to compute off isolation.

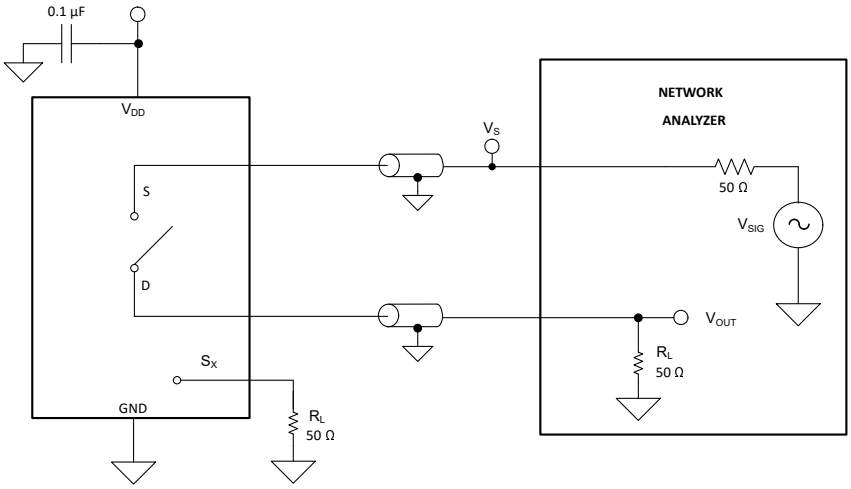


**Figure 7-9. Off Isolation Measurement Setup**

$$Off\ Isolation\ =\ 20\ \times\ Log\left(\frac{V_{OUT}}{V_S}\right) \quad (1)$$

## 7.10 Crosstalk

Crosstalk is defined as the ratio of the signal at the drain pin (D) of a different channel, when a signal is applied at the source pin (Sx) of an on-channel. Figure 7-10 shows the setup used to measure, and the equation used to compute crosstalk.

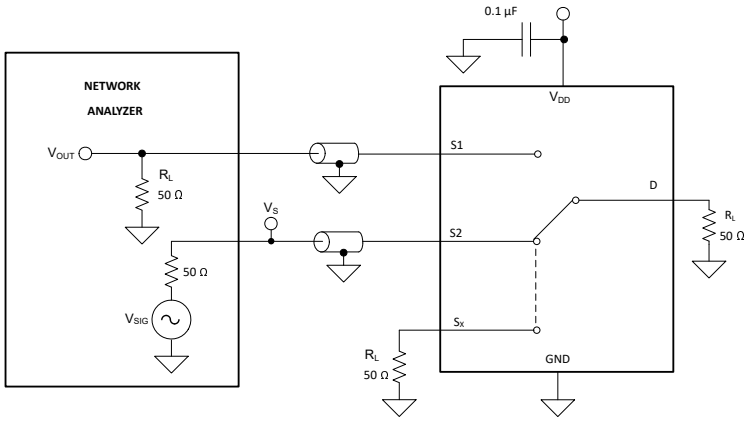


**Figure 7-10. Channel-to-Channel Crosstalk Measurement Setup**

$$Channel-to-Channel\ Crosstalk\ =\ 20\ \times\ Log\left(\frac{V_{OUT}}{V_S}\right) \quad (2)$$


Copyright © 2024 Texas Instruments Incorporated

## 7.11 Bandwidth

Bandwidth is defined as the range of frequencies that are attenuated by less than 3 dB when the input is applied to the source pin (Sx) of an on-channel, and the output is measured at the drain pin (D) of the device. Figure 7-11 shows the setup used to measure bandwidth.

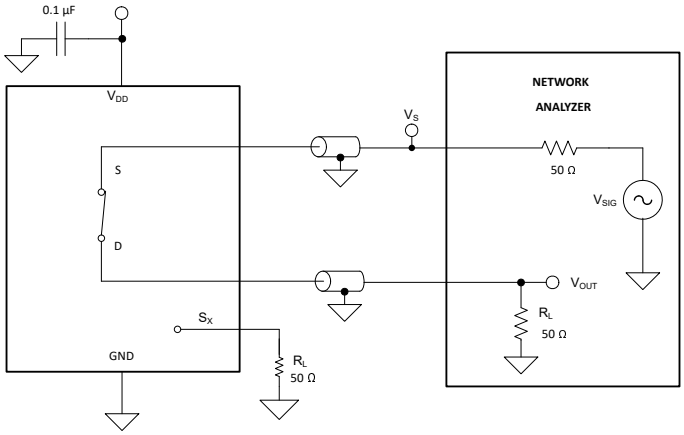


**Figure 7-11. Bandwidth Measurement Setup**

$$Attenuation = 20 \times Log\left(\frac{V_2}{V_1}\right) \quad (3)$$

# 8 Detailed Description

## 8.1 Overview

The TMUX4051 is an 8:1, single-ended (1-channel) mux, the TMUX4052 is a 4:1, differential (2-channel) multiplexer, and the TMUX4053 is 2:1, 3 channel switch. Each channel is turned on or turned off based on the state of the address lines and enable pin.

## 8.2 Functional Block Diagram

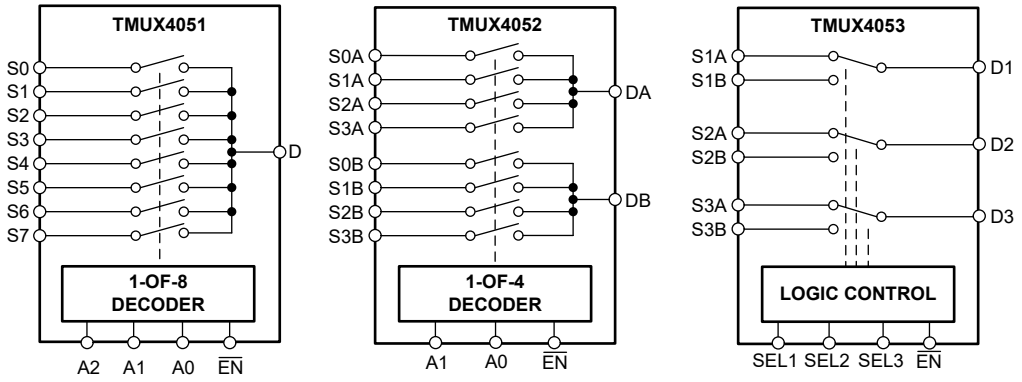


## 8.3 Feature Description

### *8.3.1 Bidirectional Operation*

The TMUX4051, TMUX4052, and TMUX4053 devices conduct equally well from source (Sx) to drain (Dx) or from drain (Dx) to source (Sx). Each signal path has very similar characteristics in both directions so they can be used as both multiplexers and demultiplexer to support analog signals.

### *8.3.2 Rail-to-Rail Operation*

The valid signal path input and output voltage for the TMUX4051, TMUX4052, and TMUX4053 ranges from $V_{SS}$ to $V_{DD}$.

### *8.3.3 1.8V Logic Compatible Inputs*

The TMUX4051, TMUX4052, and TMUX4053 support 1.8V logic compatible control for all logic control inputs. 1.8V logic level inputs allows the multiplexers to interface with processors that have lower logic I/O rails and eliminates the need for an external voltage translator, which saves both space and BOM cost. For more information on 1.8V logic implementation, refer to Simplifying Design with 1.8V logic Muxes and Switches.

### *8.3.4 Device Functional Modes*

When the $\overline{EN}$ pin of the TMUX405x devices is pulled low, one of the switches is closed based on the state of the address or select pins. When the $\overline{EN}$ pin is pulled high, all the switches are in an open state regardless of the state of the address or select pins.

Unused logic control pins must be tied to GND or $V_{DD}$ to be certain that the device does not consume additional current as highlighted in Implications of Slow or Floating CMOS Inputs. Unused signal path inputs (Sx and Dx) should be connected to GND.


Copyright © 2024 Texas Instruments Incorporated

### 8.3.5 Truth Tables

Table 8-1, Table 8-2, and Table 8-3 provides the truth tables for the TMUX4051 respectively.

**Table 8-1. TMUX4051 Truth Table**

| $\overline{EN}$ | A2 | A1 | A0 | Selected Signal Path Connected To Drain (D) Pin |
|---|---|---|---|---|
| 0 | 0 | 0 | 0 | S0 |
| 0 | 0 | 0 | 1 | S1 |
| 0 | 0 | 1 | 0 | S2 |
| 0 | 0 | 1 | 1 | S3 |
| 0 | 1 | 0 | 0 | S4 |
| 0 | 1 | 0 | 1 | S5 |
| 0 | 1 | 1 | 0 | S6 |
| 0 | 1 | 1 | 1 | S7 |
| 1 | X(1) | X(1) | X(1) | All inputs are unselected (HI-Z) |

(1) X denotes *do not care*.

**Table 8-2. TMUX4052 Truth Table**

| $\overline{EN}$ | A1 | A0 | Selected Signal Path Connected To Drain (DA and DB) Pins |
|---|---|---|---|
| 0 | 0 | 0 | S0A to DA<br>S0B to DB |
| 0 | 0 | 1 | S1A to DA<br>S1B to DB |
| 0 | 1 | 0 | S2A to DA<br>S2B to DB |
| 0 | 1 | 1 | S3A to DA<br>S3B to DB |
| 1 | X(1) | X(1) | All inputs are unselected (HI-Z) |

(1) X denotes *do not care*.

**Table 8-3. TMUX4053 Truth Table**

| $\overline{EN}$ | SEL1 | SEL2 | SEL3 | Selected Signal Path Connected To Drain Pins |
|---|---|---|---|---|
| 0 | 0 | X | X | S1A to D1 |
| 0 | 1 | X | X | S1B to D1 |
| 0 | X | 0 | X | S2A to D2 |
| 0 | X | 1 | X | S2B to D2 |
| 0 | X | X | 0 | S3A to D3 |
| 0 | X | X | 1 | S3B to D3 |
| 1 | X(1) | X(1) | X(1) | All inputs are unselected (HI-Z) |

(1) X denotes *do not care*.

The Enable pin, $\overline{EN}$, of the TMUX405x devices have a weak internal pull-up resistor to put the devices into a disabled state upon power up. The SELx / Address pins (Ax) have weak internal pull-down resistors to put the switch into a defined logic state.

Copyright © 2024 Texas Instruments Incorporated

# 9 Application and Implementation

**Note**

Information in the following applications sections is not part of the TI component specification, and TI does not warrant its accuracy or completeness. TI's customers are responsible for determining suitability of components for their purposes. Customers should validate and test their design implementation to confirm system functionality.

## 9.1 Application Information

The TMUX405x devices offer good system performance across a wide operating supply (5V to 24V). These devices include 1.8V logic compatible control input pins that enable operation in systems with 1.8V I/O rails. These features make the TMUX405x a family of general purpose multiplexers and switches that can reduce system complexity, board size, and overall system cost.

## 9.2 Typical Application

One useful application to take advantage of the TMUX405x features is multiplexing various signals into an ADC that is integrated into an MCU. Utilizing an integrated ADC in an MCU allows a system to minimize cost with a potential tradeoff of system performance when compared to an external ADC. The multiplexer allows for multiple inputs or sensors to be monitored with a single ADC pin of the device, which is critical in systems with limited I/O. The TMUX4052 is suitable for a similar design example using differential signals, or as two 4:1 multiplexers.

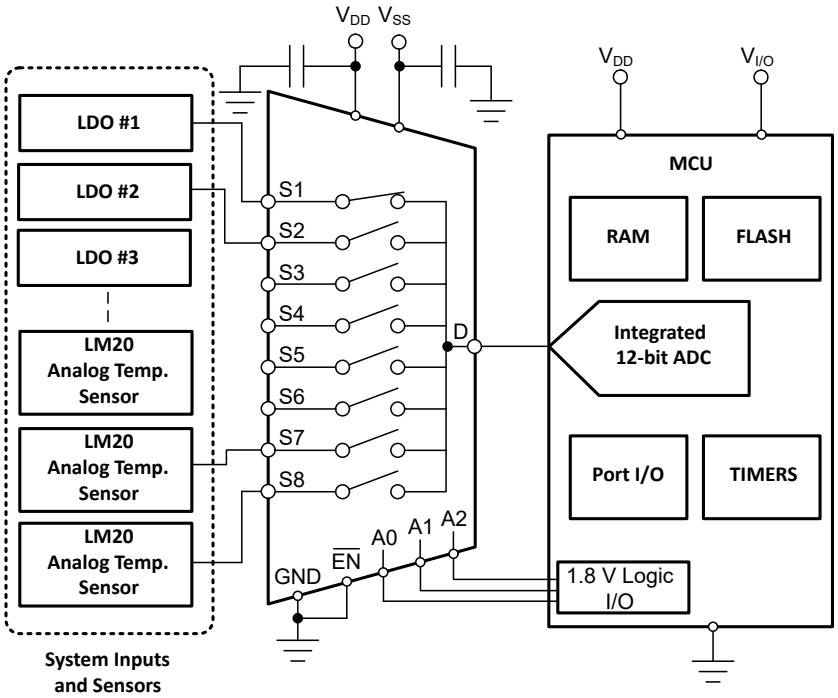


**Figure 9-1. Multiplexing Signals to an Integrated ADC with TMUX4051**


Copyright © 2024 Texas Instruments Incorporated

## 9.3 Design Requirements

Table 9-1 lists the parameters that must be used for this design example.

**Table 9-1. Design Parameters**

| PARAMETERS | VALUES |
|---|---|
| Supply ($V_{DD}$) | 12V |
| I/O signal range | 0V to $V_{DD}$ (rail-to-rail) |
| Control logic thresholds | 1.8V compatible |

## 9.4 Detailed Design Procedure

The TMUX4051, TMUX4052, and TMUX4053 can operate without any external components except for the supply decoupling capacitors. The MCU can control the enable and address pins through GPIOs to toggle between various inputs of the multiplexer. The enable pin should be connected to ground if the functionality is not required in the system. All inputs being muxed to the ADC of the MCU must fall within the *Recommended Operating Conditions*, including signal range and continuous current. For this design with a supply of 12V, the signal range can be 0V to 12V.

## 9.5 Application Curves

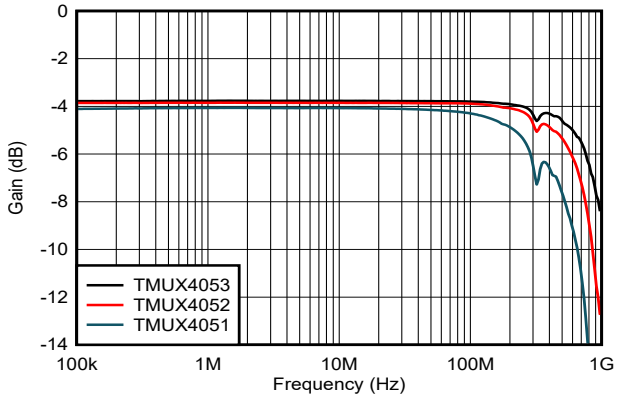


**Figure 9-2. Bandwidth**

## 9.6 Power Supply Recommendations

The TMUX4051, TMUX4052, and TMUX4053 devices operate across a wide supply range of 5V to 24V.

Power-supply bypassing improves noise margin and prevents switching noise propagation from the supply pins to other components. Good power-supply decoupling is important to achieve optimum performance. For improved supply noise immunity, use a supply decoupling capacitor ranging from 0.1µF to 10µF from $V_{DD}$ to ground and $V_{SS}$ to ground. Place the bypass capacitors as close to the power supply pins of the device as possible using low-impedance connections. TI recommends using multi-layer ceramic chip capacitors (MLCCs) that offer low equivalent series resistance (ESR) and inductance (ESL) characteristics for power-supply decoupling purposes. For very sensitive systems or systems in harsh noise environments, avoiding the use of vias for connecting the capacitors to the device pins may offer superior noise immunity. The use of multiple vias in parallel lowers the overall inductance and is beneficial for connections to ground planes.

Copyright © 2024 Texas Instruments Incorporated

## 9.7 Layout

### 9.7.1 Layout Guidelines

Route high-speed signals using minimal vias and corners, which reduces signal reflections and impedance changes. When a via must be used, increase the clearance size around it to minimize its capacitance. Each via introduces discontinuities in the signal's transmission line and increases the chance of picking up interference from the other layers of the board. Be careful when designing test points, through-hole pins are not recommended at high frequencies.

Figure 9-3 shows an example of a PCB layout with the TMUX4051, TMUX4052, and TMUX4053. Some key considerations are as follows:

- Decouple the $V_{DD}$ and $V_{SS}$ pins with a 0.1µF capacitor, placed as close to the pin as possible. Ensure that the capacitor voltage rating is sufficient.
- Keep the input lines as short as possible.
- Use a solid ground plane to help reduce electromagnetic interference (EMI) noise pickup.
- Do not run sensitive analog traces in parallel with digital traces. Avoid crossing digital and analog traces if possible, and only make perpendicular crossings when necessary.

### 9.7.2 Layout Example

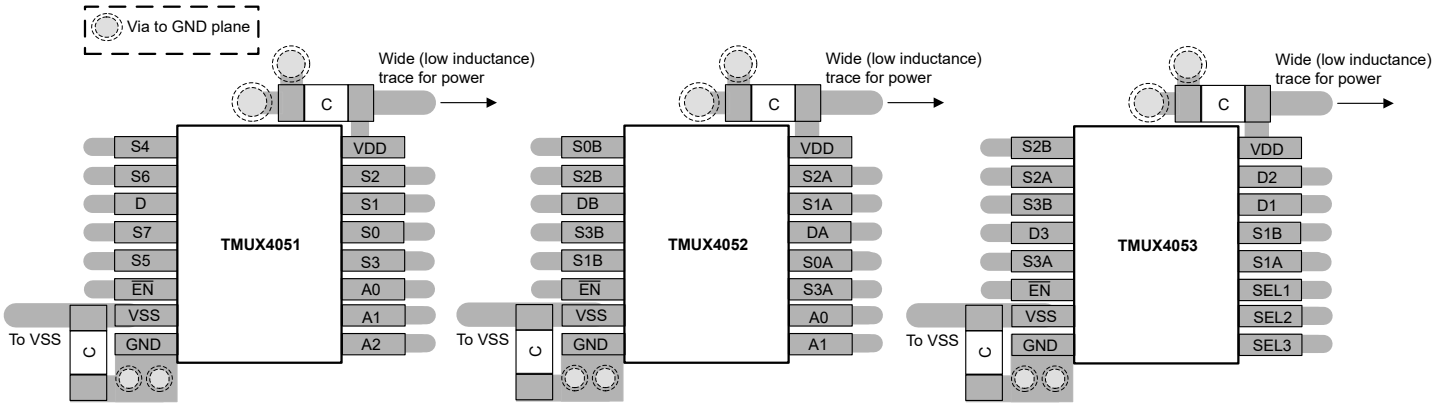


**Figure 9-3. TMUX4051, TMUX4052, and TMUX4053 Layout Example**


Copyright © 2024 Texas Instruments Incorporated

# 10 Device and Documentation Support

## 10.1 Documentation Support

### *10.1.1 Related Documentation*

For related documentation, see the following:

- Texas Instruments, *Simplifying Design with 1.8V logic Muxes and Switches* application brief
- Texas Instruments, *QFN/SON PCB Attachment* application report
- Texas Instruments, *Quad Flatpack No-Lead Logic Packages* application report

## 10.2 Receiving Notification of Documentation Updates

To receive notification of documentation updates, navigate to the device product folder on ti.com. Click on *Notifications* to register and receive a weekly digest of any product information that has changed. For change details, review the revision history included in any revised document.

## 10.3 Support Resources

TI E2E™ support forums are an engineer's go-to source for fast, verified answers and design help — straight from the experts. Search existing answers or ask your own question to get the quick design help you need.

Linked content is provided "AS IS" by the respective contributors. They do not constitute TI specifications and do not necessarily reflect TI's views; see TI's Terms of Use.

## 10.4 Trademarks

TI E2E™ is a trademark of Texas Instruments.
All trademarks are the property of their respective owners.

## 10.5 Electrostatic Discharge Caution



This integrated circuit can be damaged by ESD. Texas Instruments recommends that all integrated circuits be handled with appropriate precautions. Failure to observe proper handling and installation procedures can cause damage.

ESD damage can range from subtle performance degradation to complete device failure. Precision integrated circuits may be more susceptible to damage because very small parametric changes could cause the device not to meet its published specifications.

## 10.6 Glossary

| | |
|---|---|
| TI Glossary | This glossary lists and explains terms, acronyms, and definitions. |

Copyright © 2024 Texas Instruments Incorporated

## 11 Revision History

NOTE: Page numbers for previous revisions may differ from page numbers in the current version.

| Changes from Revision D (July 2024) to Revision E (September 2024) | Page |
|---|---|
| • Added TMUX4052 and TMUX4053 pin drawings | 4 |

| Changes from Revision C (July 2024) to Revision D (July 2024) | Page |
|---|---|
| • Added back Figure 6-7, Figure 6-8, Figure 6-9 | 14 |
| • Added back Figure 9-2 | 25 |

| Changes from Revision B (March 2023) to Revision C (July 2024) | Page |
|---|---|
| • Updated the numbering format for tables, figures, and cross-references throughout the document | 1 |
| • Updated Is(off) or Id(off) values | 9 |
| • Updated Ion values | 9 |
| • Added the Typical Characteristics | 14 |

| Changes from Revision A (September 2022) to Revision B (March 2023) | Page |
|---|---|
| • Changed the status DYY and BQB packages from: *preview* to: *active* | 1 |

## 12 Mechanical, Packaging, and Orderable Information

The following pages include mechanical, packaging, and orderable information. This information is the most current data available for the designated devices. This data is subject to change without notice and revision of this document. For browser-based versions of this data sheet, refer to the left-hand navigation.


Copyright © 2024 Texas Instruments Incorporated

## PACKAGING INFORMATION

| Orderable part number | Status (1) | Material type (2) | Package \| Pins | Package qty \| Carrier | RoHS (3) | Lead finish/ Ball material (4) | MSL rating/ Peak reflow (5) | Op temp (°C) | Part marking (6) |
|---|---|---|---|---|---|---|---|---|---|
| TMUX4051BQBR | Active | Production | WQFN (BQB) \| 16 | 3000 \| LARGE T&R | Yes | SN | Level-1-260C-UNLIM | -55 to 125 | T4051 |
| TMUX4051BQBR.A | Active | Production | WQFN (BQB) \| 16 | 3000 \| LARGE T&R | Yes | SN | Level-1-260C-UNLIM | -55 to 125 | T4051 |
| TMUX4051DYYR | Active | Production | SOT-23-THIN (DYY) \| 16 | 3000 \| LARGE T&R | Yes | NIPDAU | Level-1-260C-UNLIM | -55 to 125 | T4051 |
| TMUX4051DYYR.A | Active | Production | SOT-23-THIN (DYY) \| 16 | 3000 \| LARGE T&R | Yes | NIPDAU | Level-1-260C-UNLIM | -55 to 125 | T4051 |
| TMUX4051PWR | Active | Production | TSSOP (PW) \| 16 | 2000 \| LARGE T&R | Yes | NIPDAU | Level-1-260C-UNLIM | -55 to 125 | T4051 |
| TMUX4051PWR.A | Active | Production | TSSOP (PW) \| 16 | 2000 \| LARGE T&R | Yes | NIPDAU | Level-1-260C-UNLIM | -55 to 125 | T4051 |
| TMUX4052BQBR | Active | Production | WQFN (BQB) \| 16 | 3000 \| LARGE T&R | Yes | SN | Level-1-260C-UNLIM | -55 to 125 | T4052 |
| TMUX4052BQBR.A | Active | Production | WQFN (BQB) \| 16 | 3000 \| LARGE T&R | Yes | SN | Level-1-260C-UNLIM | -55 to 125 | T4052 |
| TMUX4052DYYR | Active | Production | SOT-23-THIN (DYY) \| 16 | 3000 \| LARGE T&R | Yes | NIPDAU | Level-1-260C-UNLIM | -55 to 125 | T4052 |
| TMUX4052DYYR.A | Active | Production | SOT-23-THIN (DYY) \| 16 | 3000 \| LARGE T&R | Yes | NIPDAU | Level-1-260C-UNLIM | -55 to 125 | T4052 |
| TMUX4052PWR | Active | Production | TSSOP (PW) \| 16 | 2000 \| LARGE T&R | Yes | NIPDAU | Level-1-260C-UNLIM | -55 to 125 | T4052 |
| TMUX4052PWR.A | Active | Production | TSSOP (PW) \| 16 | 2000 \| LARGE T&R | Yes | NIPDAU | Level-1-260C-UNLIM | -55 to 125 | T4052 |
| TMUX4053BQBR | Active | Production | WQFN (BQB) \| 16 | 3000 \| LARGE T&R | Yes | SN | Level-1-260C-UNLIM | -55 to 125 | T4053 |
| TMUX4053BQBR.A | Active | Production | WQFN (BQB) \| 16 | 3000 \| LARGE T&R | Yes | SN | Level-1-260C-UNLIM | -55 to 125 | T4053 |
| TMUX4053DYYR | Active | Production | SOT-23-THIN (DYY) \| 16 | 3000 \| LARGE T&R | Yes | NIPDAU | Level-1-260C-UNLIM | -55 to 125 | T4053 |
| TMUX4053DYYR.A | Active | Production | SOT-23-THIN (DYY) \| 16 | 3000 \| LARGE T&R | Yes | NIPDAU | Level-1-260C-UNLIM | -55 to 125 | T4053 |
| TMUX4053PWR | Active | Production | TSSOP (PW) \| 16 | 2000 \| LARGE T&R | Yes | NIPDAU | Level-1-260C-UNLIM | -55 to 125 | T4053 |
| TMUX4053PWR.A | Active | Production | TSSOP (PW) \| 16 | 2000 \| LARGE T&R | Yes | NIPDAU | Level-1-260C-UNLIM | -55 to 125 | T4053 |

(1) **Status:** For more details on status, see our product life cycle.

(2) **Material type:** When designated, preproduction parts are prototypes/experimental devices, and are not yet approved or released for full production. Testing and final process, including without limitation quality assurance, reliability performance testing, and/or process qualification, may not yet be complete, and this item is subject to further changes or possible discontinuation. If available for ordering, purchases will be subject to an additional waiver at checkout, and are intended for early internal evaluation purposes only. These items are sold without warranties of any kind.

(3) **RoHS values:** Yes, No, RoHS Exempt. See the TI RoHS Statement for additional information and value definition.

**(4) Lead finish/Ball material:** Parts may have multiple material finish options. Finish options are separated by a vertical ruled line. Lead finish/Ball material values may wrap to two lines if the finish value exceeds the maximum column width.

**(5) MSL rating/Peak reflow:** The moisture sensitivity level ratings and peak solder (reflow) temperatures. In the event that a part has multiple moisture sensitivity ratings, only the lowest level per JEDEC standards is shown. Refer to the shipping label for the actual reflow temperature that will be used to mount the part to the printed circuit board.

**(6) Part marking:** There may be an additional marking, which relates to the logo, the lot trace code information, or the environmental category of the part.

Multiple part markings will be inside parentheses. Only one part marking contained in parentheses and separated by a "~" will appear on a part. If a line is indented then it is a continuation of the previous line and the two combined represent the entire part marking for that device.

**Important Information and Disclaimer:**The information provided on this page represents TI's knowledge and belief as of the date that it is provided. TI bases its knowledge and belief on information provided by third parties, and makes no representation or warranty as to the accuracy of such information. Efforts are underway to better integrate information from third parties. TI has taken and continues to take reasonable steps to provide representative and accurate information but may not have conducted destructive testing or chemical analysis on incoming materials and chemicals. TI and TI suppliers consider certain information to be proprietary, and thus CAS numbers and other limited information may not be available for release.

In no event shall TI's liability arising out of such information exceed the total purchase price of the TI part(s) at issue in this document sold by TI to Customer on an annual basis.

**OTHER QUALIFIED VERSIONS OF TMUX4051, TMUX4052 :**

- Automotive : TMUX4051-Q1, TMUX4052-Q1

NOTE: Qualified Version Definitions:

- Automotive - Q100 devices qualified for high-reliability automotive applications targeting zero defects

# GENERIC PACKAGE VIEW

## BQB 16

## WQFN - 0.8 mm max height

**2.5 x 3.5, 0.5 mm pitch**

PLASTIC QUAD FLATPACK - NO LEAD

This image is a representation of the package family, actual package may vary.
Refer to the product data sheet for package details.

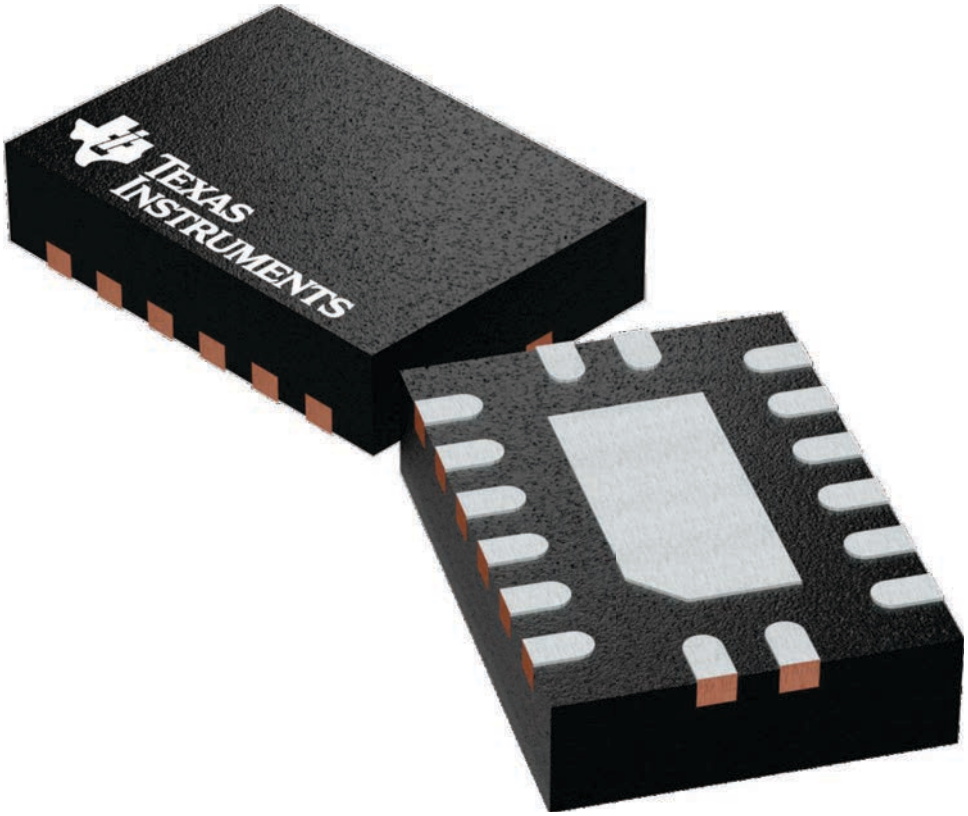


4226161/A

# PACKAGE OUTLINE

## BQB0016A

## WQFN - 0.8 mm max height

PLASTIC QUAD FLAT PACK-NO LEAD

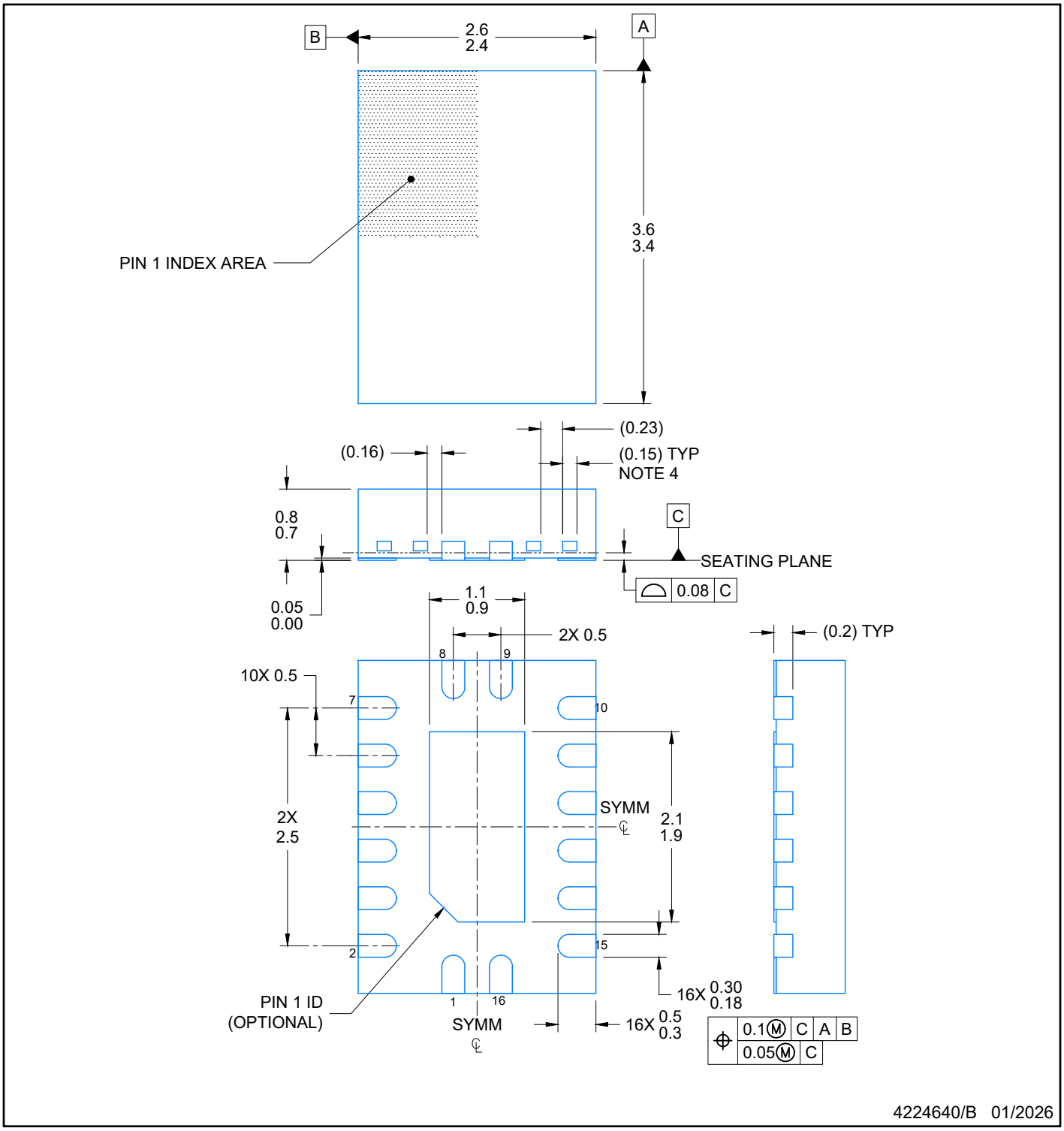


NOTES:

1. All linear dimensions are in millimeters. Any dimensions in parenthesis are for reference only. Dimensioning and tolerancing per ASME Y14.5M.
2. This drawing is subject to change without notice.
3. The package thermal pad must be soldered to the printed circuit board for optimal thermal and mechanical performance.
4. Features may differ or may not be present

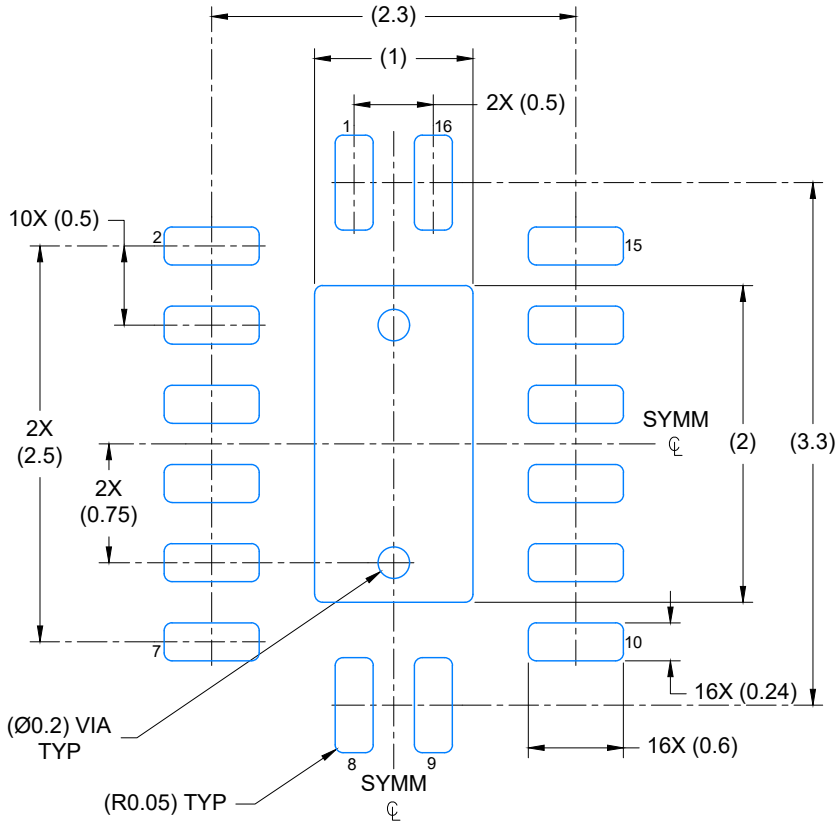


LAND PATTERN EXAMPLE
EXPOSED METAL SHOWN
SCALE: 20X

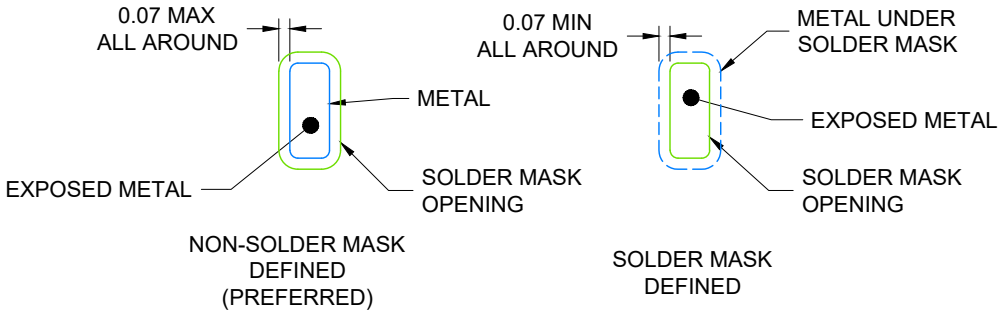


4224640/B 01/2026

1. NOTES: (continued)

5. This package is designed to be soldered to a thermal pad on the board. For more information, see Texas Instruments literature number SLUA271 (www.ti.com/lit/slua271).

6. Vias are optional depending on application, refer to device data sheet. If any vias are implemented, refer to their locations shown on this view. It is recommended that vias under paste be filled, plugged or tented.

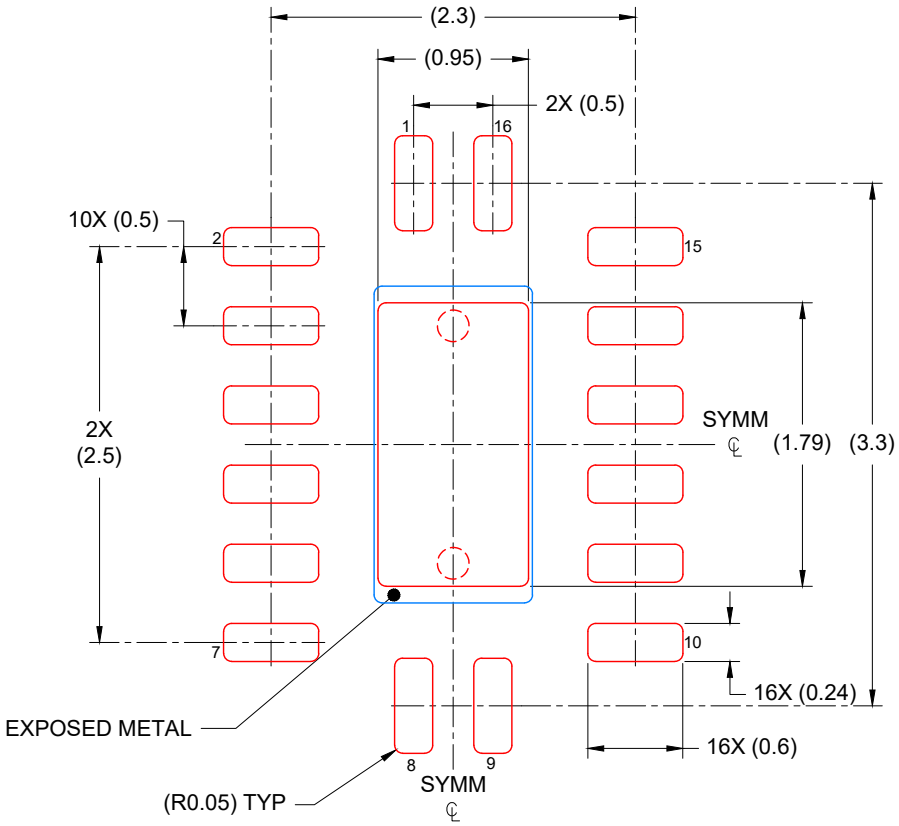


SOLDER PASTE EXAMPLE
BASED ON 0.125 mm THICK STENCIL

EXPOSED PAD
85% PRINTED COVERAGE BY AREA
SCALE: 20X

4224640/B 01/2026

NOTES: (continued)

7. Laser cutting apertures with trapezoidal walls and rounded corners may offer better paste release. IPC-7525 may have alternate design recommendations.

# PACKAGE OUTLINE

## DYY0016A

## SOT-23-THIN - 1.1 mm max height

PLASTIC SMALL OUTLINE

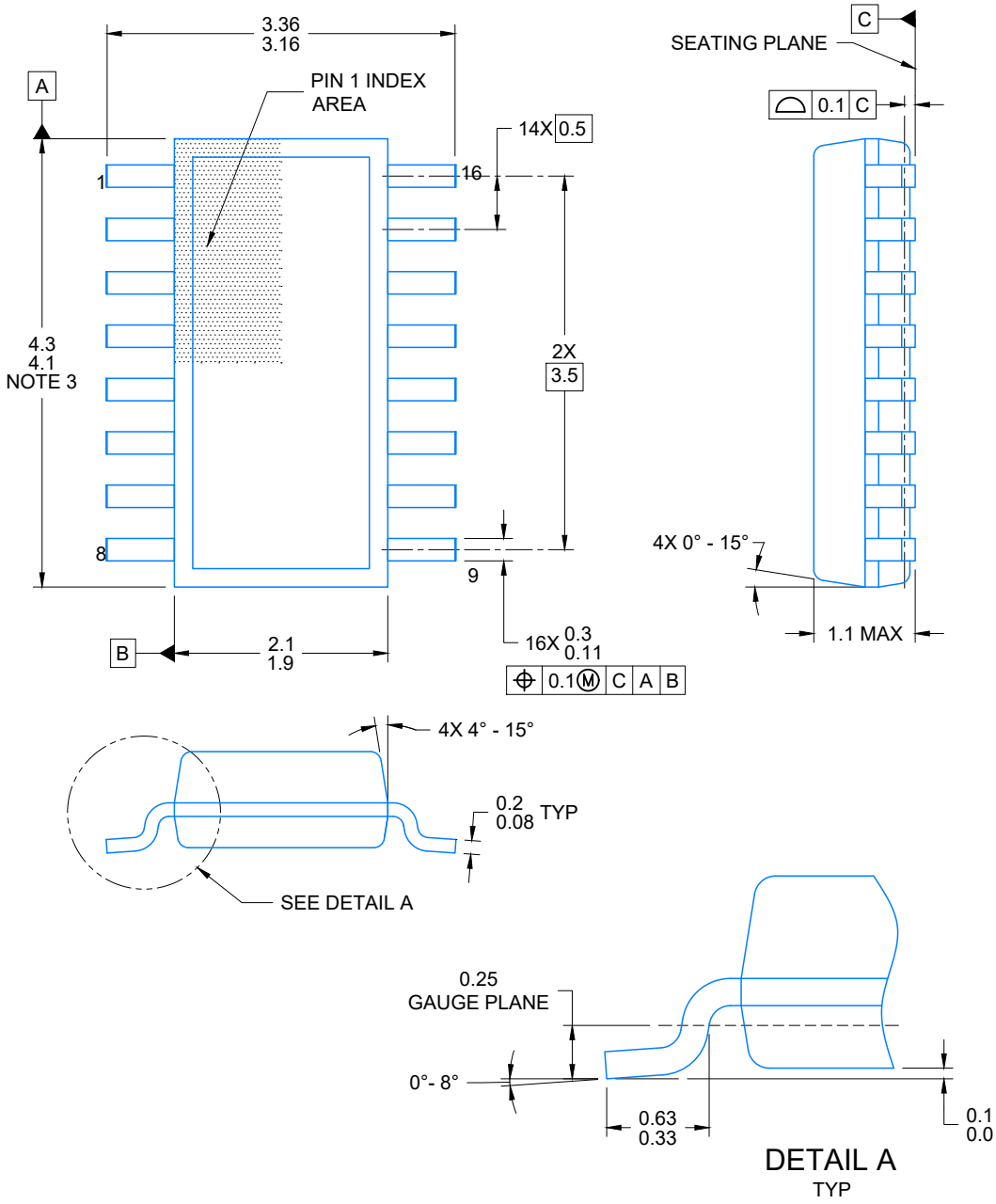


NOTES:

1. All linear dimensions are in millimeters. Any dimensions in parenthesis are for reference only. Dimensioning and tolerancing per ASME Y14.5M.
2. This drawing is subject to change without notice.
3. This dimension does not include mold flash, protrusions, or gate burrs. Mold flash, protrusions, or gate burrs shall not exceed 0.15 per side.
4. This dimension does not include interlead flash. Interlead flash shall not exceed 0.50 per side.
5. Reference JEDEC Registration MO-345, Variation AA

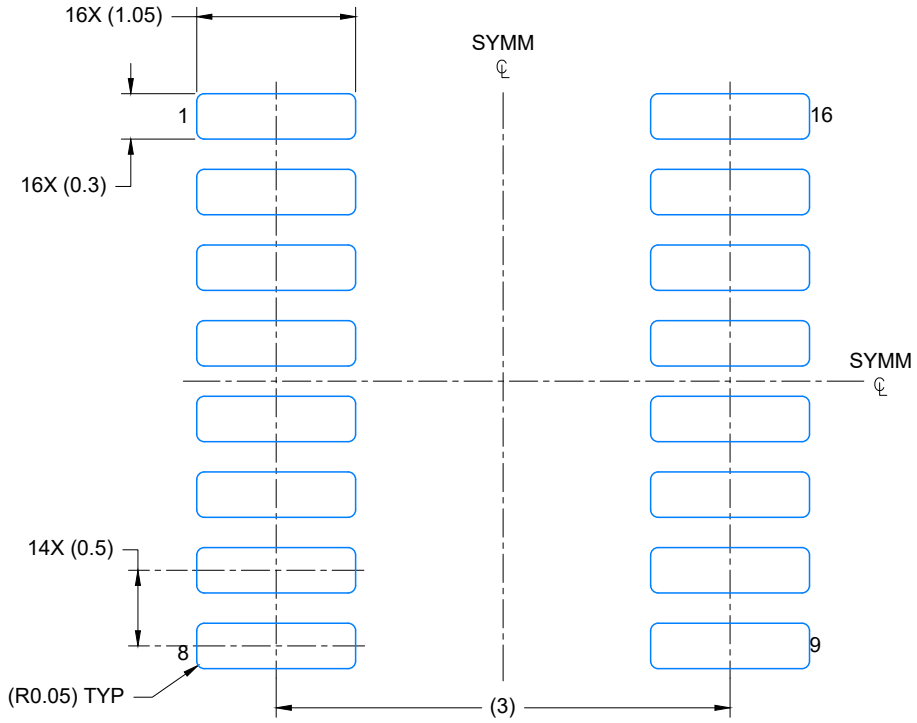


LAND PATTERN EXAMPLE
EXPOSED METAL SHOWN
SCALE: 20X

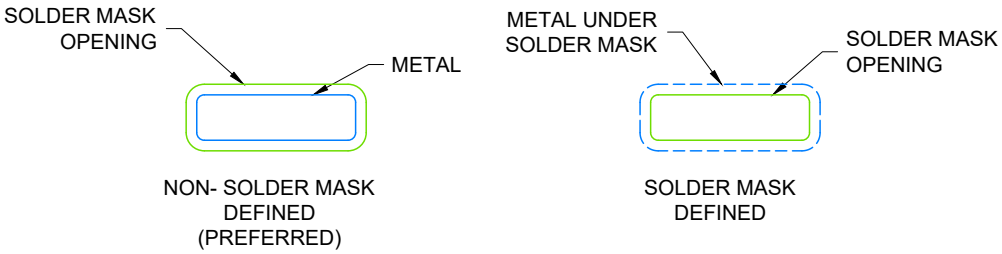


SOLDER MASK DETAILS

4224642/D 07/2024

NOTES: (continued)

6. Publication IPC-7351 may have alternate designs.
7. Solder mask tolerances between and around signal pads can vary based on board fabrication site.

# EXAMPLE STENCIL DESIGN

## SOT-23-THIN - 1.1 mm max height

PLASTIC SMALL OUTLINE

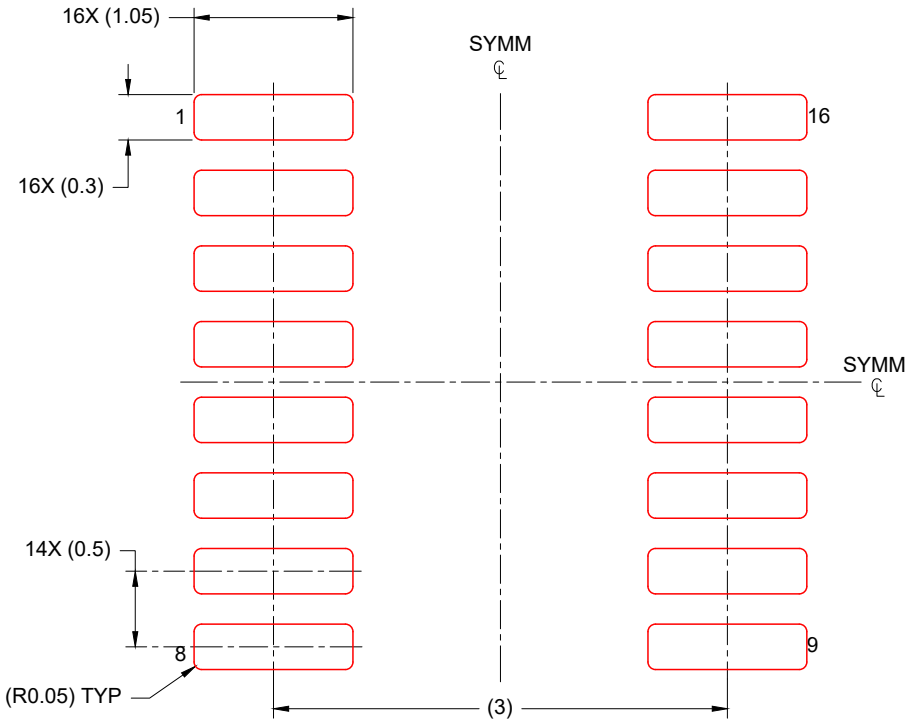


SOLDER PASTE EXAMPLE
BASED ON 0.125 mm THICK STENCIL
SCALE: 20X

4224642/D 07/2024

NOTES: (continued)

8. Laser cutting apertures with trapezoidal walls and rounded corners may offer better paste release. IPC-7525 may have alternate design recommendations.
9. Board assembly site may have different recommendations for stencil design.

# PACKAGE OUTLINE

## PW0016A

## TSSOP - 1.2 mm max height

SMALL OUTLINE PACKAGE

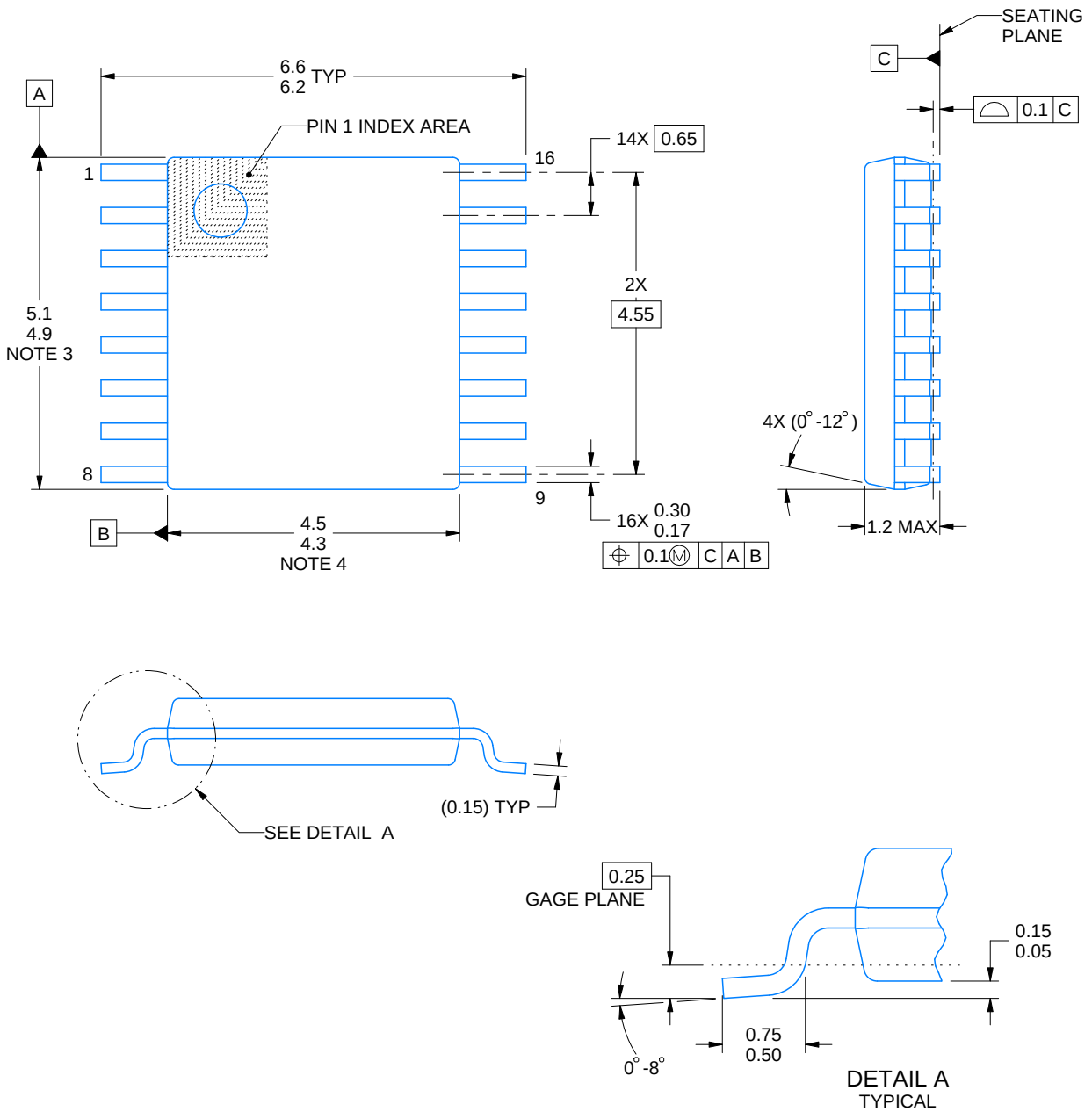


NOTES:

1. All linear dimensions are in millimeters. Any dimensions in parenthesis are for reference only. Dimensioning and tolerancing per ASME Y14.5M.
2. This drawing is subject to change without notice.
3. This dimension does not include mold flash, protrusions, or gate burrs. Mold flash, protrusions, or gate burrs shall not exceed 0.15 mm per side.
4. This dimension does not include interlead flash. Interlead flash shall not exceed 0.25 mm per side.
5. Reference JEDEC registration MO-153.

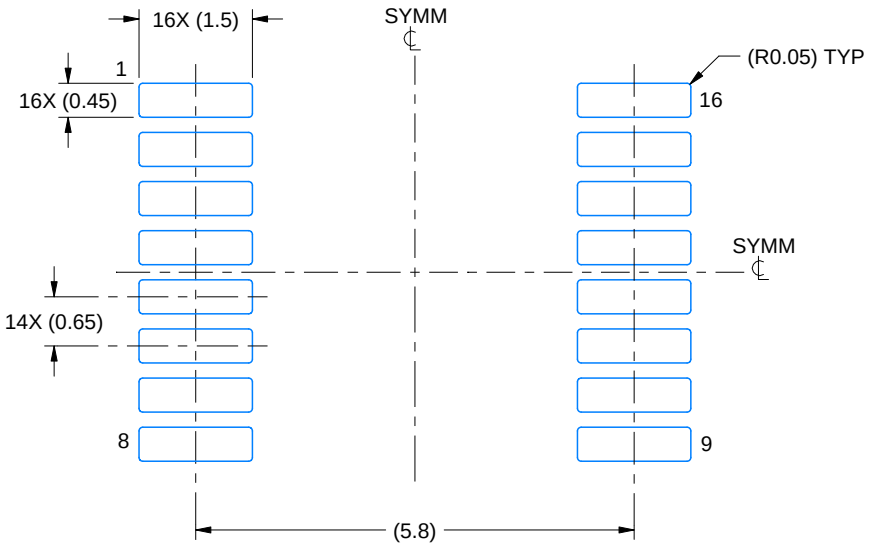


LAND PATTERN EXAMPLE
EXPOSED METAL SHOWN
SCALE: 10X




SOLDER MASK DETAILS

4220204/B 12/2023

NOTES: (continued)

6. Publication IPC-7351 may have alternate designs.
7. Solder mask tolerances between and around signal pads can vary based on board fabrication site.

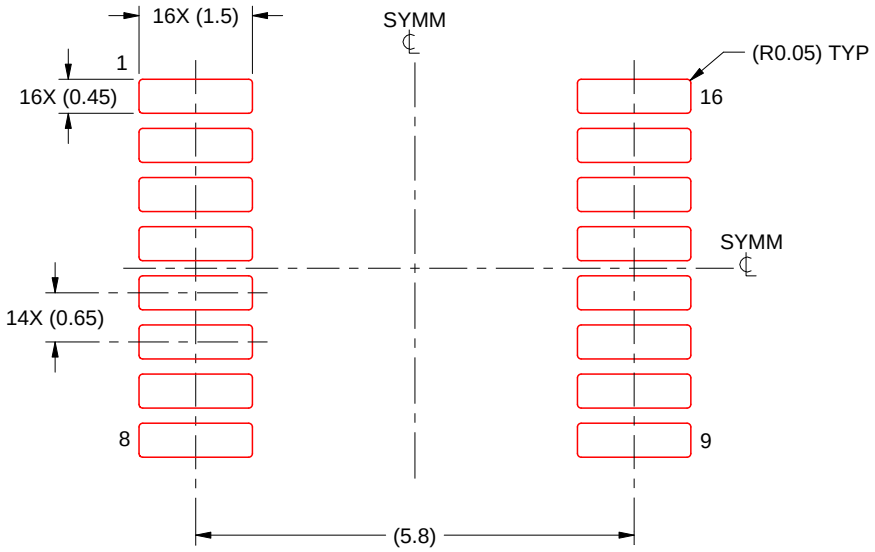


SOLDER PASTE EXAMPLE
BASED ON 0.125 mm THICK STENCIL
SCALE: 10X

4220204/B 12/2023

NOTES: (continued)

8. Laser cutting apertures with trapezoidal walls and rounded corners may offer better paste release. IPC-7525 may have alternate design recommendations.
9. Board assembly site may have different recommendations for stencil design.

# IMPORTANT NOTICE AND DISCLAIMER

TI PROVIDES TECHNICAL AND RELIABILITY DATA (INCLUDING DATASHEETS), DESIGN RESOURCES (INCLUDING REFERENCE DESIGNS), APPLICATION OR OTHER DESIGN ADVICE, WEB TOOLS, SAFETY INFORMATION, AND OTHER RESOURCES “AS IS” AND WITH ALL FAULTS, AND DISCLAIMS ALL WARRANTIES, EXPRESS AND IMPLIED, INCLUDING WITHOUT LIMITATION ANY IMPLIED WARRANTIES OF MERCHANTABILITY, FITNESS FOR A PARTICULAR PURPOSE OR NON-INFRINGEMENT OF THIRD PARTY INTELLECTUAL PROPERTY RIGHTS.

These resources are intended for skilled developers designing with TI products. You are solely responsible for (1) selecting the appropriate TI products for your application, (2) designing, validating and testing your application, and (3) ensuring your application meets applicable standards, and any other safety, security, regulatory or other requirements.

These resources are subject to change without notice. TI grants you permission to use these resources only for development of an application that uses the TI products described in the resource. Other reproduction and display of these resources is prohibited. No license is granted to any other TI intellectual property right or to any third party intellectual property right. TI disclaims responsibility for, and you fully indemnify TI and its representatives against any claims, damages, costs, losses, and liabilities arising out of your use of these resources.

TI’s products are provided subject to TI’s Terms of Sale, TI’s General Quality Guidelines, or other applicable terms available either on ti.com or provided in conjunction with such TI products. TI’s provision of these resources does not expand or otherwise alter TI’s applicable warranties or warranty disclaimers for TI products. Unless TI explicitly designates a product as custom or customer-specified, TI products are standard, catalog, general purpose devices.

TI objects to and rejects any additional or different terms you may propose.

Copyright © 2026, Texas Instruments Incorporated

Last updated 10/2025