TPS20xxB Current-Limited, Power-Distribution Switches

1 Features

- High-side MOSFET: 70mΩ
- 500mA continuous current
- Thermal and short-circuit protection
- Accurate current limit (0.75A minimum, 1.25A maximum)
- Operating range: 2.7V to 5.5V
- Typical rise time: 0.6ms
- Undervoltage lockout
- Deglitched fault report ($\overline{OC}$)
- No $\overline{OC}$ glitch during power up
- Maximum standby supply current: 1µA (single, dual) or 2µA (triple, quad)
- Ambient temperature range: –40°C to 85°C
- Safety-Related Certifications
  - UL Listed
    - File No. E169910
    - Complies with UL2367
    - IEC62368-1 CB Certified
  - MET Listed
    - File No. E115731
    - Complies with UL2367
    - IEC62368-1 CB Certified
- Additional UL recognition for TPS2042B and TPS2052B for ganged configuration

2 Applications

- Heavy capacitive loads
- Short-circuit protections

3 Description

The TPS20xxB power-distribution switches are intended for applications which encounter heavy capacitive loads and short circuits. These devices incorporates 70mΩ N-channel MOSFET power switches for power-distribution systems that require multiple power switches in one package. A logic enable input controls each switch. Gate drive is provided by an internal charge pump designed to control the power-switch rise times and fall times to minimize current surges during switching. The charge pump requires no external components and allows operation from supplies as low as 2.7V.

When the output load exceeds the current-limit threshold or a short is present, the device limits the output current to a safe level by switching into a constant-current mode, pulling the overcurrent ($\overline{OCx}$) logic output low. When continuous heavy overloads and short circuits increase the power dissipation in the switch, causing the junction temperature to rise, a thermal protection circuit shuts off the switch to prevent damage. Recovery from a thermal shutdown is automatic once the device has cooled sufficiently. Internal circuitry establishes that the switch remains off until valid input voltage is present. This power-distribution switch is designed to set current limit at 1A (typical).

Package Information

PART NUMBER	PACKAGE(1)	PACKAGE SIZE(2)
TPS20xxB	D (SOIC, 8)	4.90mm × 3.91mm
	D (SOIC, 16)	9.90mm × 3.91mm
	DBV (SOT-23, 5)	2.90mm × 1.60mm
	DGN (HVSSOP, 8)	3.00mm × 3.00mm
	DRB (SON, 8)	3.00mm × 3.00mm

(1) For all available packages, see the orderable addendum at the end of the datasheet.
(2) The package size (length × width) is a nominal value and includes pins, where applicable.

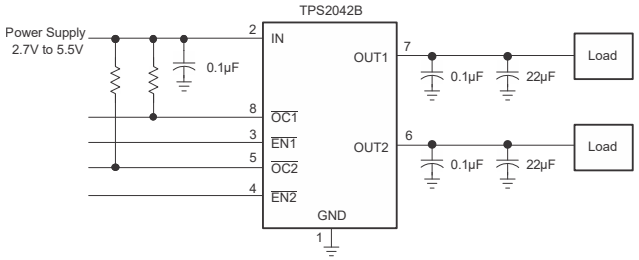

Typical Application Schematic

An IMPORTANT NOTICE at the end of this data sheet addresses availability, warranty, changes, use in safety-critical applications, intellectual property matters and other important disclaimers. PRODUCTION DATA.

Table of Contents

1 Features....1
2 Applications....1
3 Description....1
4 General Switch Catalog....3
5 Pin Configuration and Functions....4
6 Specifications....7
6.1 Absolute Maximum Ratings....7
6.2 ESD Ratings....7
6.3 Recommended Operating Conditions....7
6.4 Thermal Information....7
6.5 Electrical Characteristics....8
6.6 Typical Characteristics (All Devices Excluding TPS2051BDBV and TPS2052BD)....10
6.7 Typical Characteristics (TPS2051BDBV and TPS2052BD)....14
7 Parameter Measurement Information....17
8 Detailed Description....18
8.1 Overview....18
8.2 Functional Block Diagrams....18
8.3 Feature Description....21
8.4 Device Functional Modes....23
9 Application and Implementation....24
9.1 Application Information....24
9.2 Typical Application....24
9.3 Power Supply Recommendations....36
9.4 Layout....37
10 Device and Documentation Support....39
10.1 Receiving Notification of Documentation Updates....39
10.2 Support Resources....39
10.3 Trademarks....39
10.4 Electrostatic Discharge Caution....39
10.5 Glossary....39
11 Revision History....39
12 Mechanical, Packaging, and Orderable Information....39

Copyright © 2026 Texas Instruments Incorporated

4 General Switch Catalog

GENERAL SWITCH CATALOG

33 mΩ, Single	80 mΩ, Single	80 mΩ, Dual	80 mΩ, Dual	80 mΩ, Triple	80 mΩ, Quad	80 mΩ, Quad
			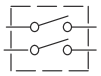	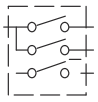	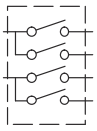	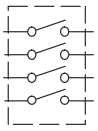
TPS201xA 0.2 A to 2 A TPS202x 0.2 A to 2 A TPS203x 0.2 A to 2 A	TPS2014 600 mA TPS2015 1 A TPS2041B 500 mA TPS2051B 500 mA TPS2045A 250 mA TPS2049 100 mA TPS2055A 250 mA TPS2061 1 A TPS2065 1 A TPS2068 1.5 A TPS2069 1.5 A	TPS2042B 500 mA TPS2052B 500 mA TPS2046B 250 mA TPS2056 250 mA TPS2062 1 A TPS2066 1 A TPS2060 1.5 A TPS2064 1.5 A	TPS2080 500 mA TPS2081 500 mA TPS2082 500 mA TPS2090 250 mA TPS2091 250 mA TPS2092 250 mA	TPS2043B 500 mA TPS2053B 500 mA TPS2047B 250 mA TPS2057A 250 mA TPS2063 1 A TPS2067 1 A	TPS2044B 500 mA TPS2054B 500 mA TPS2048A 250 mA TPS2058 250 mA	TPS2085 500 mA TPS2086 500 mA TPS2087 500 mA TPS2095 250 mA TPS2096 250 mA TPS2097 250 mA

Copyright © 2026 Texas Instruments Incorporated

5 Pin Configuration and Functions

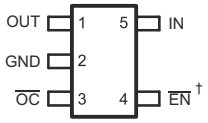

† All enable outputs are active high for the TPS205xB series.

Figure 5-1. TPS2041B and TPS2051B: DBV Package5-Pin SOT-23Top View

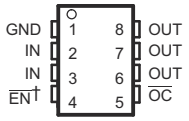

† All enable outputs are active high for the TPS205xB series.

Figure 5-2. TPS2041B and TPS2051B: D and DGN Packages8-Pin SOIC and HVSSOPTop View

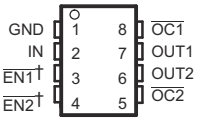

† All enable outputs are active high for the TPS205xB series.

Figure 5-3. TPS2042B and TPS2052B: D and DGN Packages8-Pin SOIC and HVSSOPTop View

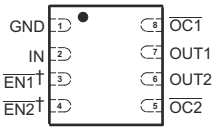

† All enable outputs are active high for the TPS205xB series.

Figure 5-4. TPS2042B and TPS2052B: DRB Package8-Pin SONTop View

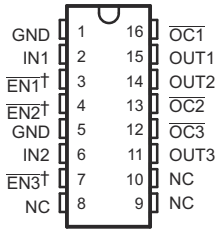

† All enable outputs are active high for the TPS205xB series.

Figure 5-5. TPS2043B and TPS2053B: D Package16-Pin SOICTop View

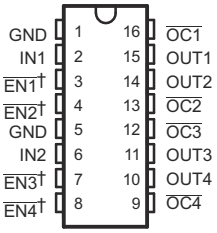

† All enable outputs are active high for the TPS205xB series.

Figure 5-6. TPS2044B and TPS2054B: D Package16-Pin SOICTop View

Table 5-1. Pin Functions (TPS2041B and TPS2051B)

NAME	PIN				TYPE (1)	DESCRIPTION
	TPS2041B	TPS2051B	TPS2041B	TPS2051B		
	SOIC AND DGN		SOT-23			
$\overline{EN}$	4	—	4	—	I	Enable input, logic low turns on power switch
EN	—	4	—	4	I	Enable input, logic high turns on power switch
GND	1	1	2	2	—	Ground
IN	2, 3	2, 3	5	5	I	Input voltage
$\overline{OC}$	5	5	3	3	O	Overcurrent open-drain output, active-low
OUT	6, 7, 8	6, 7, 8	1	1	O	Power-switch output

(1) I = input, O = output

Table 5-2. Pin Functions (TPS2042B and TPS2052B)

NAME	PIN		TYPE(1)	DESCRIPTION
	TPS2042B	TPS2052B		
	SOIC, HVSSOP, SON			
$\overline{EN1}$	3	—	I	Enable input, logic low turns on power switch IN-OUT1
$\overline{EN2}$	4	—	I	Enable input, logic low turns on power switch IN-OUT2
EN1	—	3	I	Enable input, logic high turns on power switch IN-OUT1
EN2	—	4	I	Enable input, logic high turns on power switch IN-OUT2

Copyright © 2026 Texas Instruments Incorporated

Table 5-2. Pin Functions (TPS2042B and TPS2052B) (continued)

PIN			TYPE(1)	DESCRIPTION
NAME	TPS2042B	TPS2052B		
	SOIC, HVSSOP, SON			
GND	1	1	—	Ground
IN	2	2	I	Input voltage
$\overline{OC1}$	8	8	O	Overcurrent, open-drain output, active low, IN-OUT1
$\overline{OC2}$	5	5	O	Overcurrent, open-drain output, active low, IN-OUT2
OUT1	7	7	O	Power-switch output, IN-OUT1
OUT2	6	6	O	Power-switch output, IN-OUT2
PowerPAD™	—	—	—	Internally connected to GND; used to heat-sink the part to the circuit board traces. Must be connected to GND pin.

(1) I = input, O = output

Table 5-3. Pin Functions (TPS2043B and TPS2053B)

PIN			TYPE(1)	DESCRIPTION
NAME	TPS2043B	TPS2053B		
	SOIC	SOIC		
$\overline{EN1}$	3	—	I	Enable input, logic low turns on power switch IN1-OUT1
$\overline{EN2}$	4	—	I	Enable input, logic low turns on power switch IN1-OUT2
$\overline{EN3}$	7	—	I	Enable input, logic low turns on power switch IN2-OUT3
EN1	—	3	I	Enable input, logic high turns on power switch IN1-OUT1
EN2	—	4	I	Enable input, logic high turns on power switch IN1-OUT2
EN3	—	7	I	Enable input, logic high turns on power switch IN2-OUT3
GND	1, 5	1, 5	—	Ground
IN1	2	2	I	Input voltage for OUT1 and OUT2
IN2	6	6	I	Input voltage for OUT3
NC	8, 9, 10	8, 9, 10	—	No connection
$\overline{OC1}$	16	16	O	Overcurrent, open-drain output, active low, IN1-OUT1
$\overline{OC2}$	13	13	O	Overcurrent, open-drain output, active low, IN1-OUT2
$\overline{OC3}$	12	12	O	Overcurrent, open-drain output, active low, IN2-OUT3
OUT1	15	15	O	Power-switch output, IN1-OUT1
OUT2	14	14	O	Power-switch output, IN1-OUT2
OUT3	11	11	O	Power-switch output, IN2-OUT3

(1) I = input, O = output

Table 5-4. Pin Functions (TPS2044B and TPS2054B)

PIN			TYPE(1)	DESCRIPTION
NAME	TPS2044B	TPS2054B		
	SOIC	SOIC		
$\overline{EN1}$	3	—	I	Enable input, logic low turns on power switch IN1-OUT1
$\overline{EN2}$	4	—	I	Enable input, logic low turns on power switch IN1-OUT2
$\overline{EN3}$	7	—	I	Enable input, logic low turns on power switch IN2-OUT3
$\overline{EN4}$	8	—	I	Enable input, logic low turns on power switch IN2-OUT4
EN1	—	3	I	Enable input, logic high turns on power switch IN1-OUT1
EN2	—	4	I	Enable input, logic high turns on power switch IN1-OUT2
EN3	—	7	I	Enable input, logic high turns on power switch IN2-OUT3
EN4	—	8	I	Enable input, logic high turns on power switch IN2-OUT4

Copyright © 2026 Texas Instruments Incorporated

Table 5-4. Pin Functions (TPS2044B and TPS2054B) (continued)

PIN			TYPE(1)	DESCRIPTION
NAME	TPS2044B	TPS2054B		
	SOIC	SOIC		
GND	1, 5	1, 5	—	Ground
IN1	2	2	I	Input voltage for OUT1 and OUT2
IN2	6	6	I	Input voltage for OUT3 and OUT4
$\overline{OC1}$	16	16	O	Overcurrent, open-drain output, active low, IN1-OUT1
$\overline{OC2}$	13	13	O	Overcurrent, open-drain output, active low, IN1-OUT2
$\overline{OC3}$	12	12	O	Overcurrent, open-drain output, active low, IN2-OUT3
$\overline{OC4}$	9	9	O	Overcurrent, open-drain output, active low, IN2-OUT4
OUT1	15	15	O	Power-switch output, IN1-OUT1
OUT2	14	14	O	Power-switch output, IN1-OUT2
OUT3	11	11	O	Power-switch output, IN2-OUT3
OUT4	10	10	O	Power-switch output, IN2-OUT4

(1) I = input, O = output

Copyright © 2026 Texas Instruments Incorporated

6 Specifications

6.1 Absolute Maximum Ratings

over operating free-air temperature range (unless otherwise noted) (1)

		MIN	MAX	UNIT
$V_{I(IN)}$, $V_{I(INx)}$	Input voltage (2)	–0.3	6	V
$V_{O(OUT)}$, $V_{O(OUTx)}$ (2)	Output voltage	–0.3	6	V
$V_{I(\overline{EN})}$, $V_{I(\overline{ENx})}$, $V_{I(EN)}$, $V_{I(ENx)}$	Input voltage	–0.3	6	V
$V_{I(/OC)}$, $V_{I(\overline{OCx})}$	Voltage range	–0.3	6	V
$I_{O(OUT)}$, $I_{O(OUTx)}$	Continuous output current	Internally limited		
T_J	Operating virtual junction temperature	–40	125	°C
T_{stg}	Storage temperature	–65	150	°C

(1) Operation outside the *Absolute Maximum Ratings* may cause permanent device damage. *Absolute Maximum Ratings* do not imply functional operation of the device at these or any other conditions beyond those listed under *Recommended Operating Conditions*. If used outside the *Recommended Operating Conditions* but within the *Absolute Maximum Ratings*, the device may not be fully functional, and this may affect device reliability, functionality, performance, and shorten the device lifetime.
(2) All voltages are with respect to GND.

6.2 ESD Ratings

			VALUE	UNIT
$V_{(ESD)}$	Electrostatic discharge	Human body model (HBM), per ANSI/ESDA/JEDEC JS-001, all pins (1)	±2000	V
		Charged device model (CDM), per JEDEC specification JESD22-C101, all pins (2)	±500	

(1) JEDEC document JEP155 states that 500V HBM allows safe manufacturing with a standard ESD control process.
(2) JEDEC document JEP157 states that 250V CDM allows safe manufacturing with a standard ESD control process.

6.3 Recommended Operating Conditions

over operating free-air temperature range (unless otherwise noted)

		MIN	NOM	MAX	UNIT
$V_{I(IN)}$, $V_{I(INx)}$	Input voltage	2.7		5.5	V
$V_{I(\overline{EN})}$, $V_{I(\overline{ENx})}$, $V_{I(EN)}$, $V_{I(ENx)}$	Input voltage	0		5.5	V
$I_{O(OUT)}$, $I_{O(OUTx)}$	Continuous output current	0		500	mA
T_J	Operating virtual junction temperature	–40		125	°C

6.4 Thermal Information

THERMAL METRIC (1)		D (SOIC)		DBV (SOT-23)	DGN (HVSSOP)	DRB (SON)	UNIT
		8 PINS	16 PINS	5 PINS	8 PINS	8 PINS	
$R_{\theta JA}$	Junction-to-ambient thermal resistance	119.3	81.6	208.6	53.6	47.5	°C/W
$R_{\theta JC(top)}$	Junction-to-case (top) thermal resistance	67.6	42.7	122.9	58.7	53	°C/W
$R_{\theta JB}$	Junction-to-board thermal resistance	59.6	39.1	37.8	35.5	14.2	°C/W
ψ_{JT}	Junction-to-top characterization parameter	20.3	10.4	14.6	2.7	1.2	°C/W
ψ_{JB}	Junction-to-board characterization parameter	59.1	38.8	36.9	35.3	14.2	°C/W
$R_{\theta JC(bot)}$	Junction-to-case (bottom) thermal resistance	N/A	N/A	N/A	6.7	7.3	°C/W

(1) For more information about traditional and new thermal metrics, see the *Semiconductor and IC Package Thermal Metrics* application note.

Copyright © 2026 Texas Instruments Incorporated

6.5 Electrical Characteristics

over recommended operating junction temperature range, $V_{I(IN)}$ = 5.5V, I_O = 0.5A, $V_{I(/ENx)}$ = 0V (unless otherwise noted)

PARAMETER		TEST CONDITIONS[1]			MIN	TYP	MAX	UNIT
POWER SWITCH								
$r_{DS(on)}$	Static drain-source on-state resistance, 5V operation and 3.3V operation	$V_{I(IN)}$ = 5V or 3.3V, I_O = 0.5A, -40°C ≤ T_J ≤ 125°C		D and DGN packages		70	135	mΩ
				DBV package only		95	140	
	Static drain-source on-state resistance, 2.7V operation	$V_{I(IN)}$ = 2.7V, I_O = 0.5A, –40°C ≤ T_J ≤ 125°C		D and DGN packages		75	150	mΩ
	Static drain-source on-state resistance, 5V operation	$V_{I(IN)}$ = 5V, I_O = 1A, OUT1 and OUT2 connected, 0°C ≤ T_J ≤ 70°C		DGN package, TPS2042B/52B			49	mΩ
t_r	Rise time, output	$V_{I(IN)}$ = 5.5V	C_L = 1µF, R_L = 10Ω	T_J = 25°C		0.6	1.5	ms
		$V_{I(IN)}$ = 2.7V				0.4	1	
t_f	Fall time, output	$V_{I(IN)}$ = 5.5V			0.05		0.5	
		$V_{I(IN)}$ = 2.7V			0.05		0.5	
ENABLE INPUT $\overline{EN}$ AND $\overline{ENx}$								
V_{IH}	High-level input voltage	2.7V ≤ $V_{I(IN)}$ ≤ 5.5V			2			V
V_{IL}	Low-level input voltage	2.7V ≤ $V_{I(IN)}$ ≤ 5.5V					0.8	
I_I	Input current	$V_{I(\overline{ENx})}$ = 0V or 5.5V			–0.5		0.5	µA
t_{on}	Turnon time	C_L = 100µF, R_L = 10Ω					3	ms
t_{off}	Turnoff time	C_L = 100µF, R_L = 10Ω					10	
CURRENT LIMIT								
I_{OS}	Short-circuit output current	$V_{I(IN)}$ = 5V, OUT connected to GND, device enabled into short-circuit		T_J = 25°C	0.75	1	1.25	A
				–40°C ≤ T_J ≤ 125°C	0.7	1	1.3	
		$V_{I(IN)}$ = 5V, OUT1 and OUT2 connected to GND, device enabled into short-circuit, measure at IN		0°C ≤ T_J ≤ 70°C TPS2042B/52B	1.5			
I_{OC}[2]	Overcurrent trip threshold	V_{IN} = 5V, 100A/s	TPS2042B TPS2052B (DRB package only)		I_{OS}	1.55	2	A
SUPPLY CURRENT (TPS2041B, TPS2051B)								
Supply current, low-level output		No load on OUT, $V_{I(\overline{ENx})}$ = 5.5V, or $V_{I(ENx)}$ = 0V		T_J = 25°C		0.5	1	µA
				-40°°C ≤ T_J ≤ 125°C		0.5	5	
Supply current, high-level output		No load on OUT, $V_{I(\overline{ENx})}$ = 0V, or $V_{I(ENx)}$ = 5.5V		T_J = 25°C		75	95	µA
				–40°C ≤ T_J ≤ 125°C		75	95	
Leakage current		OUT connected to ground, $V_{I(\overline{ENx})}$ = 5.5V, or $V_{I(ENx)}$ = 0V		–40°C ≤ T_J ≤ 125°C		1		µA
Reverse leakage current		$V_{I(OUTx)}$ = 5.5V, IN = ground		T_J = 25°C		0		µA
SUPPLY CURRENT (TPS2042B, TPS2052B)								
Supply current, low-level output		No load on OUT, $V_{I(\overline{ENx})}$ = 5.5V		T_J = 25°C		0.5	1	µA
				–40°C ≤ T_J ≤ 125°C		0.5	5	
Supply current, high-level output		No load on OUT, $V_{I(\overline{ENx})}$ = 0V	TPS20x2B (DRB package only)	T_J = 25°C		50	70	µA
				–40°C ≤ T_J ≤ 125°C		50	90	
			TPS20x2B (D and DGN packages)	T_J = 25°C		95	120	uA
				–40°C ≤ T_J ≤ 125°C		95	120	
Leakage current		OUT connected to ground, $V_{I(\overline{ENx})}$ = 5.5V		–40°C ≤ T_J ≤ 125°C		1		µA
Reverse leakage current		$V_{I(OUTx)}$ = 5.5V, IN = ground		T_J = 25°C		0.2		µA

Copyright © 2026 Texas Instruments Incorporated

6.5 Electrical Characteristics (continued)

over recommended operating junction temperature range, $V_{I(IN)}$ = 5.5V, I_O = 0.5A, $V_{I(/ENx)}$ = 0V (unless otherwise noted)

PARAMETER	TEST CONDITIONS[1]		MIN	TYP	MAX	UNIT
SUPPLY CURRENT (TPS2043B, TPS2053B)						
Supply current, low-level output	No load on OUT, $V_{I(ENx)}$ = 0V	T_J = 25°C		0.5	2	µA
		–40°C ≤ T_J ≤ 125°C		0.5	10	
Supply current, high-level output	No load on OUT, $V_{I(ENx)}$ = 5.5V	T_J = 25°C		65	90	µA
		–40°C ≤ T_J ≤ 125°C		65	110	
Leakage current	OUT connected to ground, $V_{I(ENx)}$ = 0V	–40°C≤ T_J ≤ 125°C		1		µA
Reverse leakage current	$V_{I(OUTx)}$ = 5.5V, INx = ground	T_J = 25°C		0.2		µA
SUPPLY CURRENT (TPS2044B, TPS2054B)						
Supply current, low-level output	No load on OUT, $V_{I(\overline{ENx})}$ = 5.5V, or $V_{I(ENx)}$ = 0V	T_J = 25°C		0.5	2	µA
		–40°C ≤ T_J ≤ 125°C		0.5	10	
Supply current, high-level output	No load on OUT, $V_{I(\overline{ENx})}$ = 0V, or $V_{I(ENx)}$ = 5.5V	T_J = 25°C		75	110	µA
		–40°C ≤ T_J ≤ 125°C		75	140	
Leakage current	OUT connected to ground, $V_{I(\overline{ENx})}$ = 5.5V, or $V_{I(ENx)}$ = 0V	–40°C≤ T_J ≤ 125°C		1		µA
Reverse leakage current	$V_{I(OUTx)}$ = 5.5V, INx = ground	T_J = 25°C		0.2		µA
UNDERVOLTAGE LOCKOUT (TPS20x3BD, TPS20x4BD, AND TPS20x2BDRB)						
Low-level input voltage, IN, INx			2		2.5	V
Hysteresis, IN, INx	T_J = 25°C			75		mV
UNDERVOLTAGE LOCKOUT (TPS20x1B AND TPS20x2B; D/DBV/DGN PACKAGES)						
Low-level input voltage, IN, INx			2		2.6	V
Hysteresis, IN, INx	T_J = 25°C			75		mV
OVERCURRENT $\overline{OC}$ AND $\overline{OCx}$						
Output low voltage, $V_{OL(/OCx)}$	$I_{O(\overline{OCx})}$ = 5mA				0.4	V
Off-state current	$V_{O(\overline{OCx})}$ = 5V or 3.3V				1	µA
$\overline{OC}$ deglitch	$\overline{OCx}$ assertion or deassertion		4	8	15	ms
THERMAL SHUTDOWN[3]						
Thermal shutdown threshold			135			°C
Recovery from thermal shutdown			125			°C
Hysteresis				10		°C

(1) Pulse-testing techniques maintain junction temperature close to ambient temperature; thermal effects must be taken into account separately.
(2) TPS20x1B and TPS20x2B devices in the D, DGN, and DBV packages do not have overcurrent trip thresholds. Current is limited to I_{OS} under different test condition. Check Section 8.3.7 for more details.
(3) The thermal shutdown only reacts under overcurrent conditions.

Copyright © 2026 Texas Instruments Incorporated

6.6 Typical Characteristics (All Devices Excluding TPS2051BDBV and TPS2052BD)

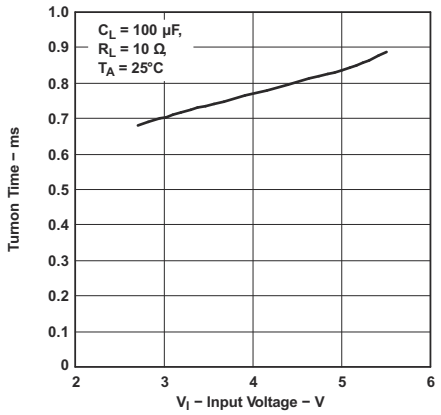

Figure 6-1. Turnon Time vs Input Voltage

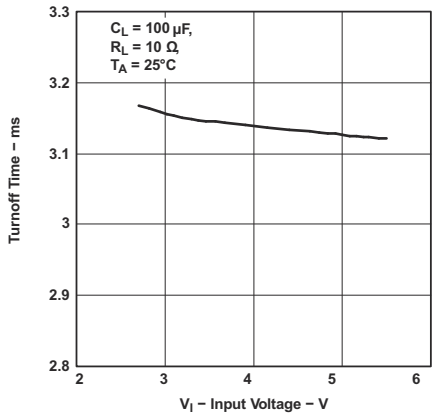

Figure 6-2. Turnoff Time vs Input Voltage

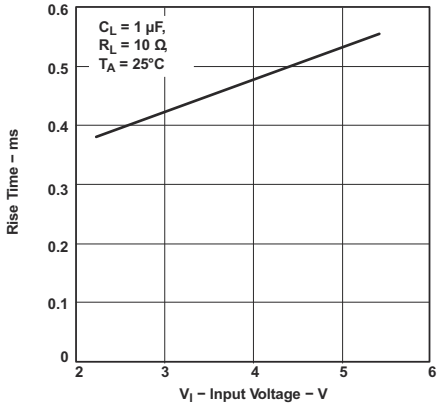

Figure 6-3. Rise Time vs Input Voltage

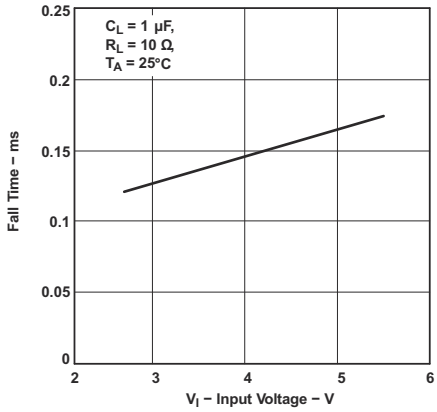

Figure 6-4. Fall Time vs Input Voltage

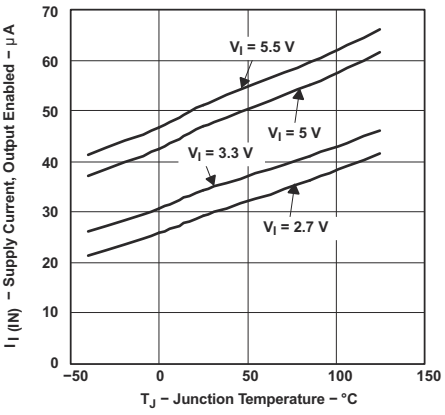

Figure 6-5. TPS20x2BDRB Supply Current, Output Enabled vs Junction Temperature

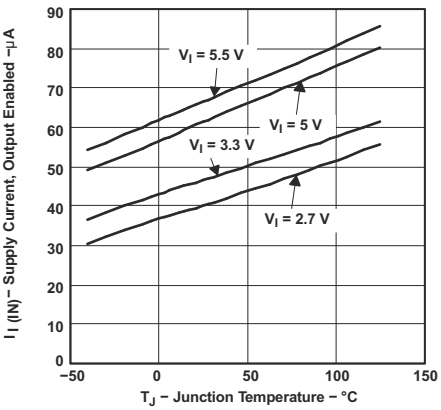

Figure 6-6. TPS2043B and TPS2053B Supply Current, Output Enabled vs Junction Temperature

Copyright © 2026 Texas Instruments Incorporated

6.6 Typical Characteristics (All Devices Excluding TPS2051BDBV and TPS2052BD) (continued)

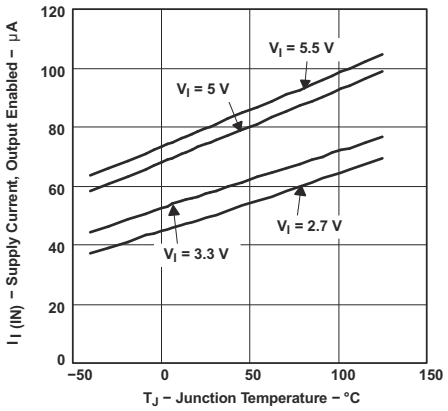

Figure 6-7. TPS2044B TPS2054B Supply Current, Output Enabled vs Junction Temperature

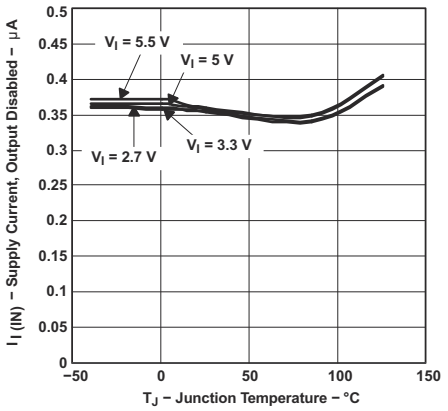

Figure 6-8. TPS20x2BDRB Supply Current, Output Disabled vs Junction Temperature

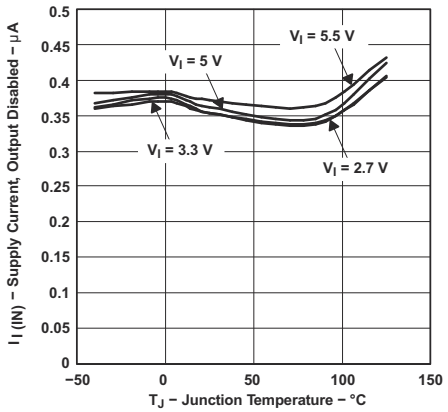

Figure 6-9. TPS2043B and TPS2053B Supply Current, Output Disabled vs Junction Temperature

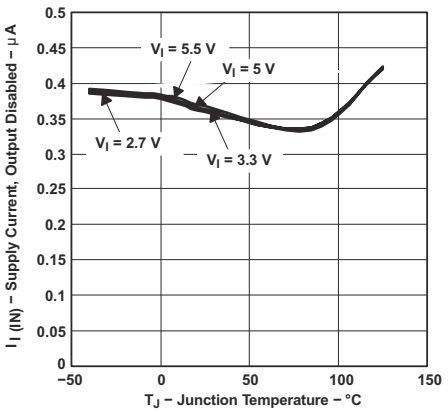

Figure 6-10. TPS2044B and TPS2054B Supply Current, Output Disabled vs Junction Temperature

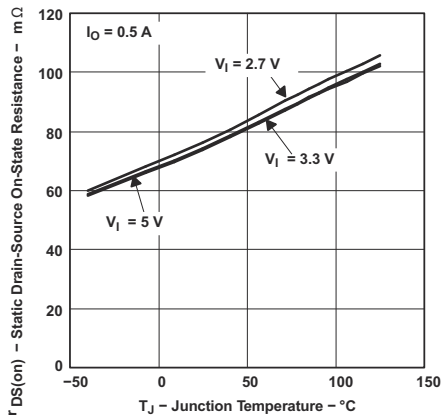

Figure 6-11. Static Drain-Source on-State Resistance vs Junction Temperature

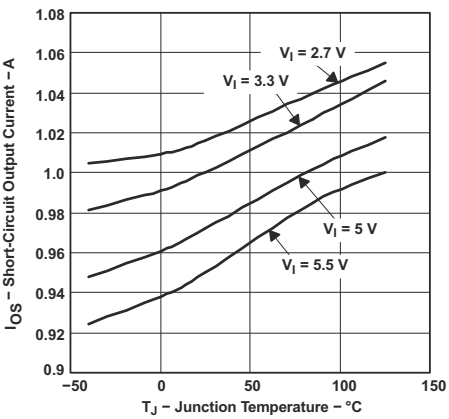

Figure 6-12. Short-Circuit Output Current vs Junction Temperature

Copyright © 2026 Texas Instruments Incorporated

6.6 Typical Characteristics (All Devices Excluding TPS2051BDBV and TPS2052BD) (continued)

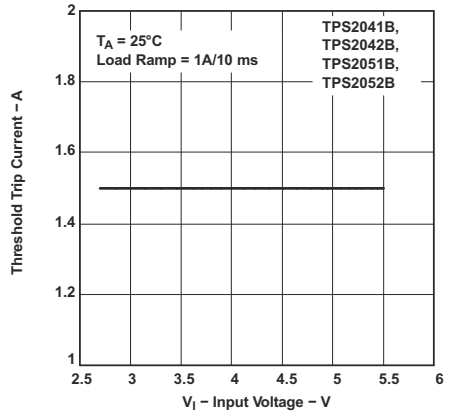

Figure 6-13. Threshold Trip Current vs Input Voltage

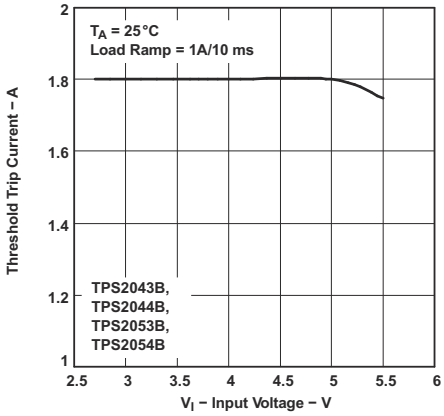

Figure 6-14. Threshold Trip Current vs Input Voltage

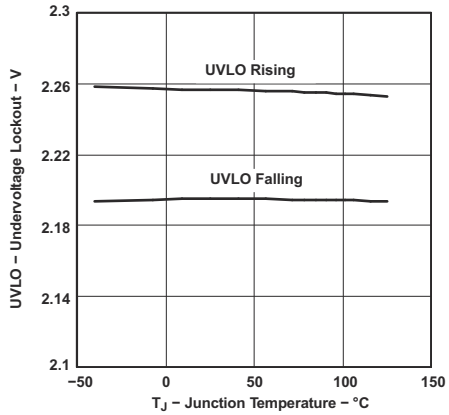

Figure 6-15. Undervoltage Lockout vs Junction Temperature

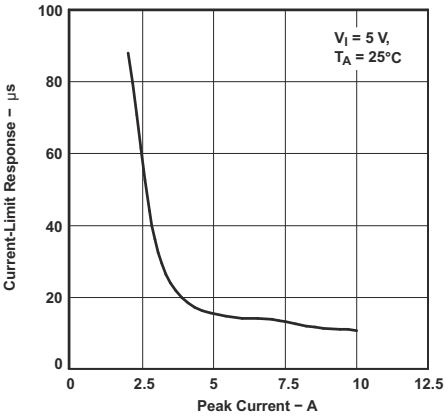

Figure 6-16. Current-Limit Response vs Peak Current

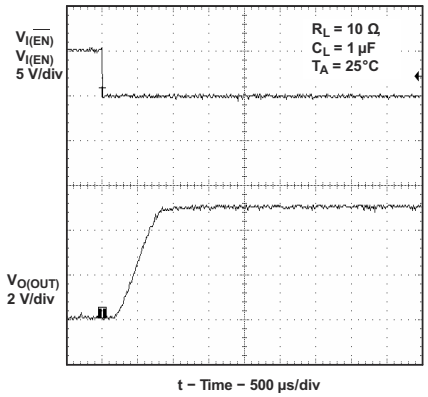

Figure 6-17. Turnon Delay and Rise Time With 1µF Load

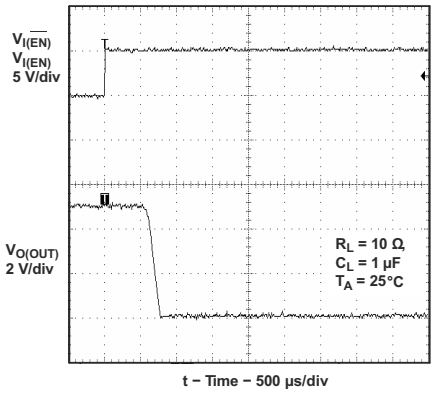

Figure 6-18. Turnoff Delay and Fall Time With 1µF Load

Copyright © 2026 Texas Instruments Incorporated

6.6 Typical Characteristics (All Devices Excluding TPS2051BDBV and TPS2052BD) (continued)

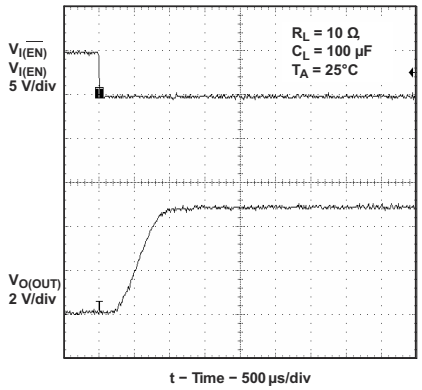

Figure 6-19. Turnon Delay and Rise Time With 100µF Load

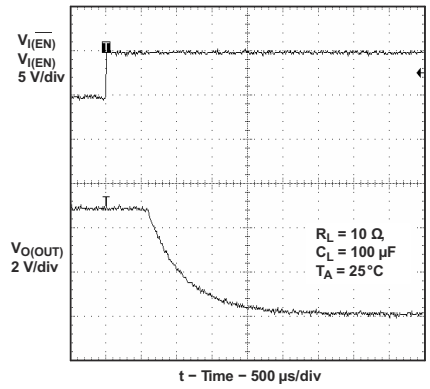

Figure 6-20. Turnoff Delay and Fall Time With 100µF Load

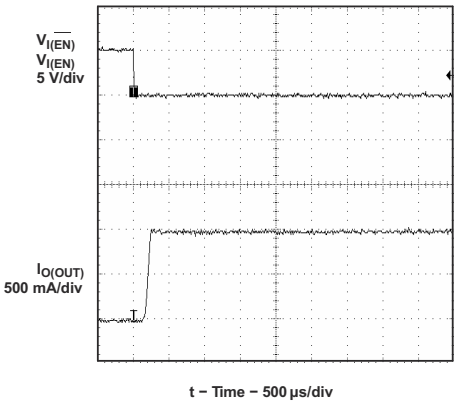

Figure 6-21. Short-Circuit Current, Device Enabled Into Short

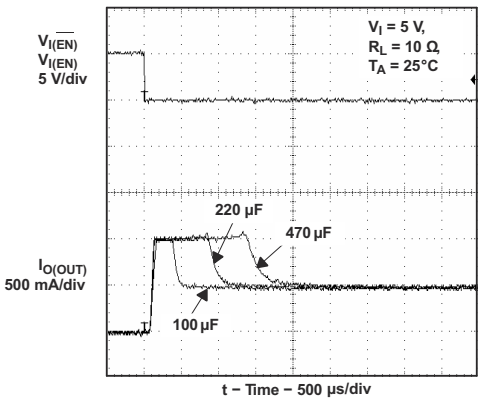

Figure 6-22. Inrush Current With Different Load Capacitance

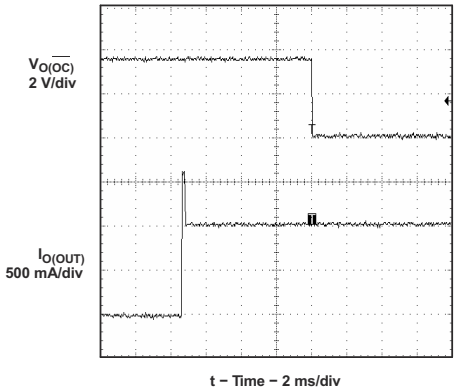

Figure 6-23. 3Ω Load Connected to Enabled Device

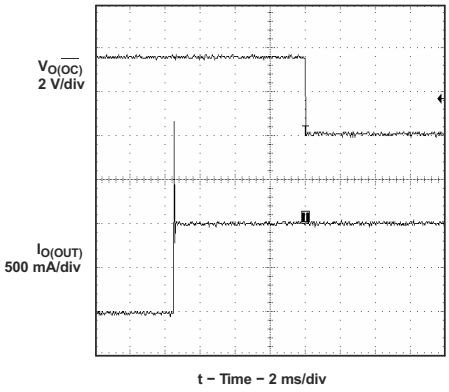

Figure 6-24. 2Ω Load Connected to Enabled Device

6.7 Typical Characteristics (TPS2051BDBV and TPS2052BD)

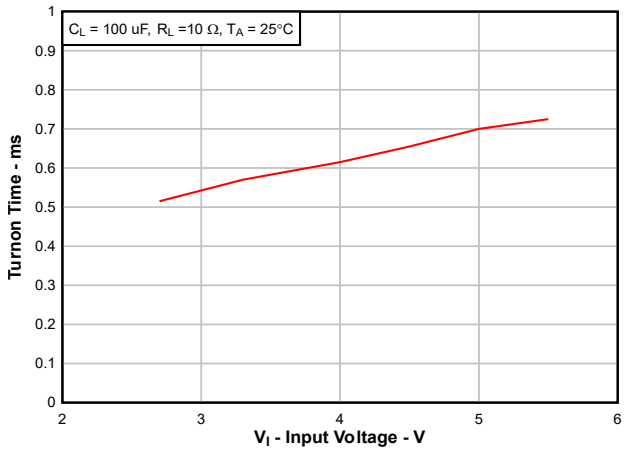

Figure 6-25. Turnon Time vs Input Voltage

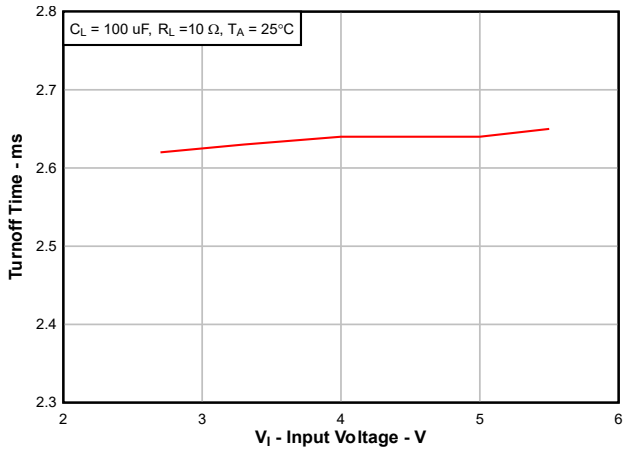

Figure 6-26. Turnoff Time vs Input Voltage

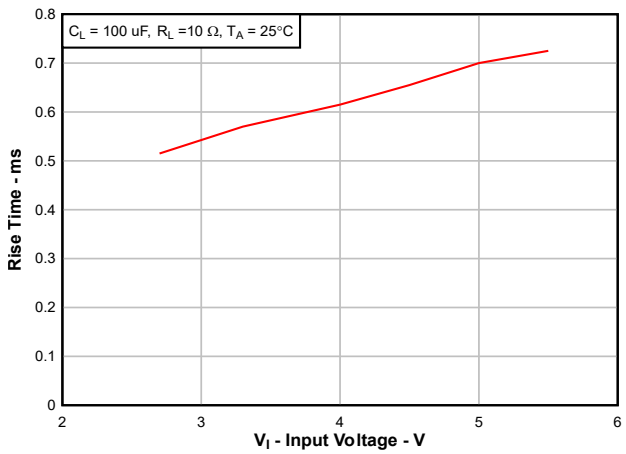

Figure 6-27. Rise Time vs Input Voltage

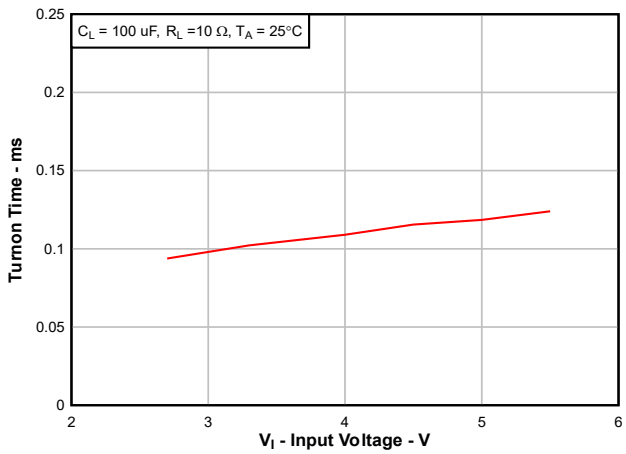

\

Figure 6-28. Fall Time vs Input Voltage

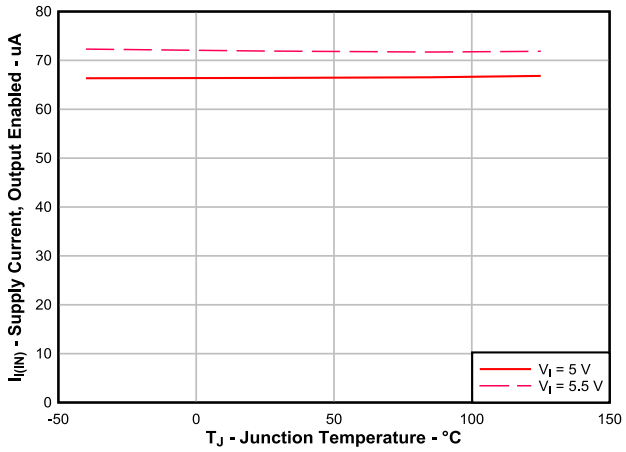

Figure 6-29. TPS2051BDBV Supply Current, Output Enabled vs Junction Temperature

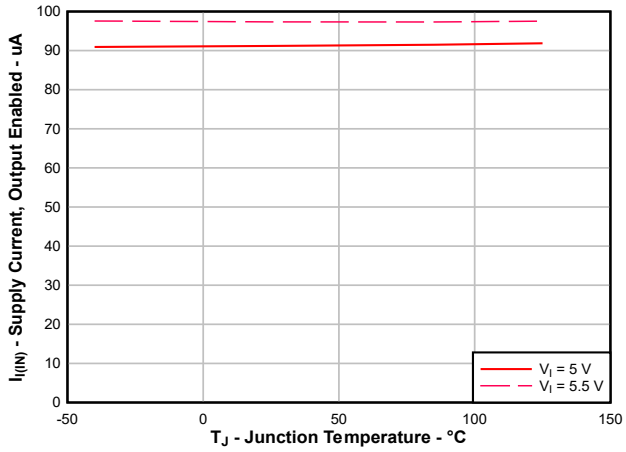

Figure 6-30. TPS2052BD Supply Current, Output Enabled vs Junction Temperature

Copyright © 2026 Texas Instruments Incorporated

6.7 Typical Characteristics (TPS2051BDBV and TPS2052BD) (continued)

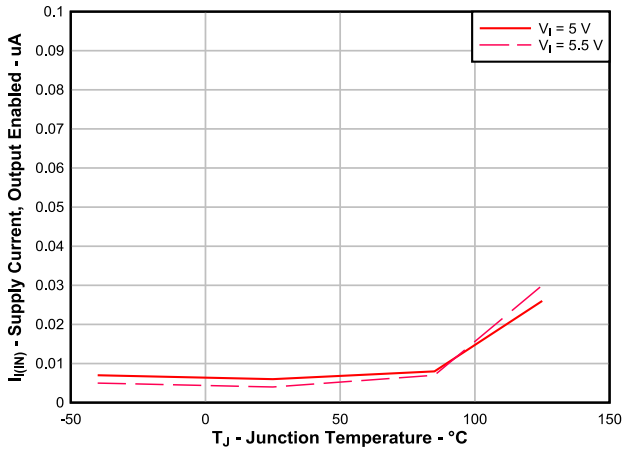

Figure 6-31. TPS2051BDBV Supply Current, Output Disabled vs Junction Temperature

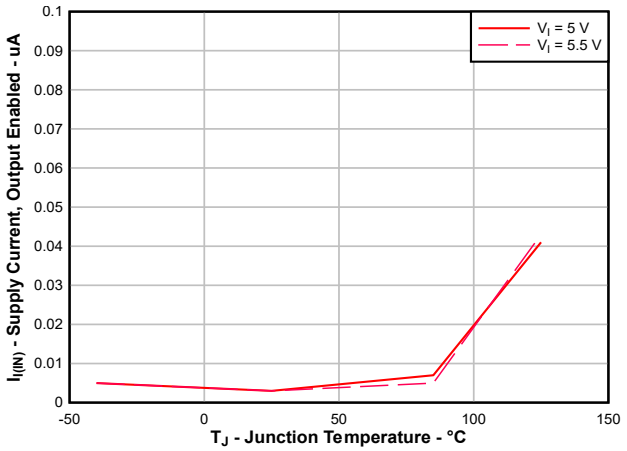

Figure 6-32. TPS2052BD Supply Current, Output Disabled vs Junction Temperature

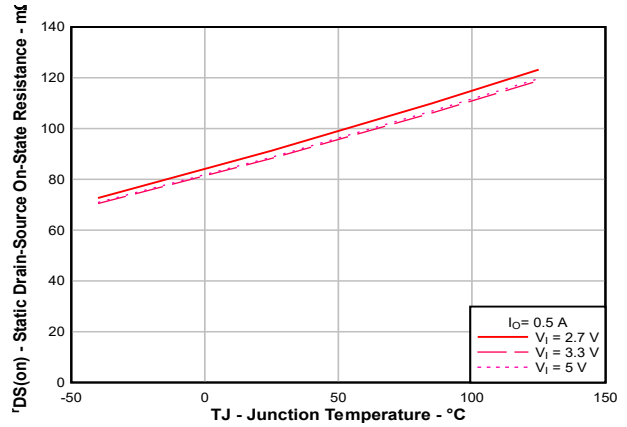

Figure 6-33. DBV Package Static Drain-Source on-State Resistance vs Junction Temperature

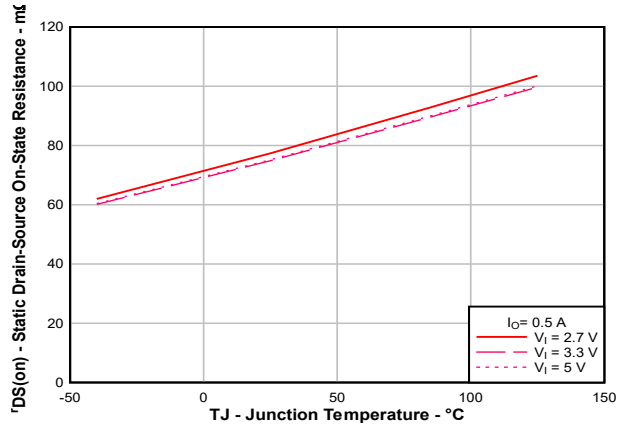

Figure 6-34. D Package Static Drain-Source on-State Resistance vs Junction Temperature

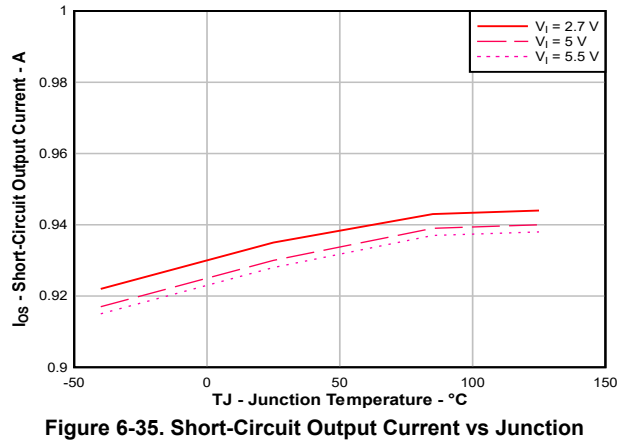

Figure 6-35. Short-Circuit Output Current vs Junction Temperature

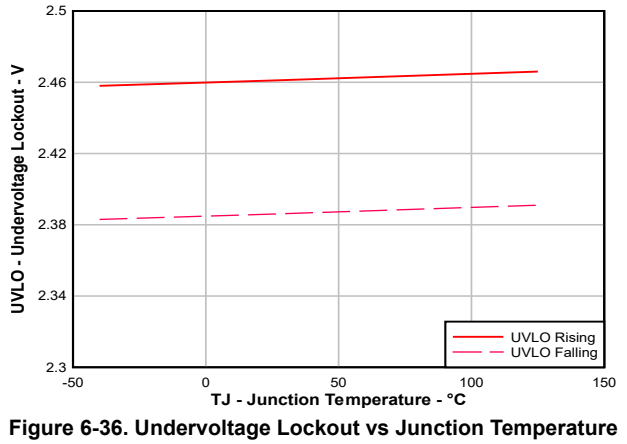

Figure 6-36. Undervoltage Lockout vs Junction Temperature

6.7 Typical Characteristics (TPS2051BDBV and TPS2052BD) (continued)

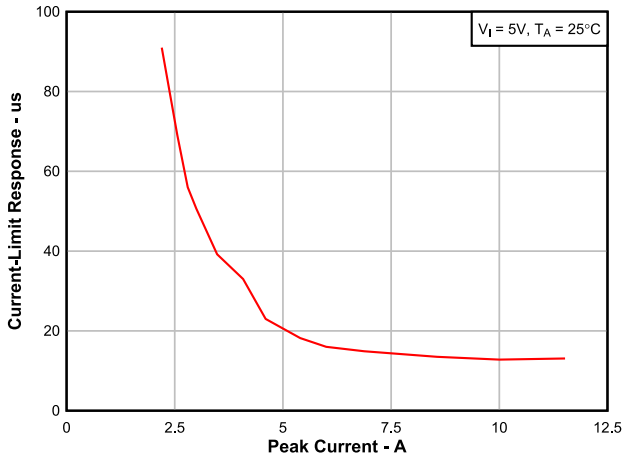

Figure 6-37. Current-Limit Response vs Peak Current

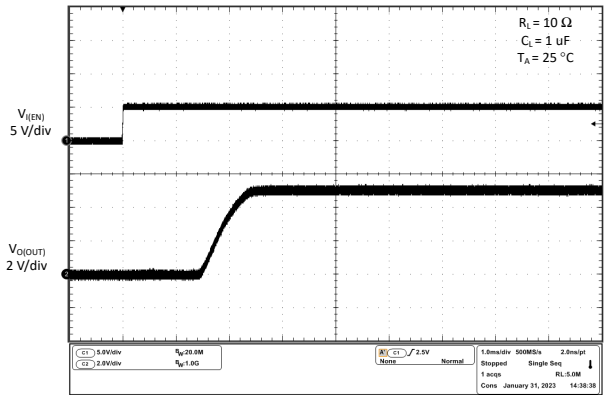

Figure 6-38. Turnon Delay and Rise Time With 1µF Load

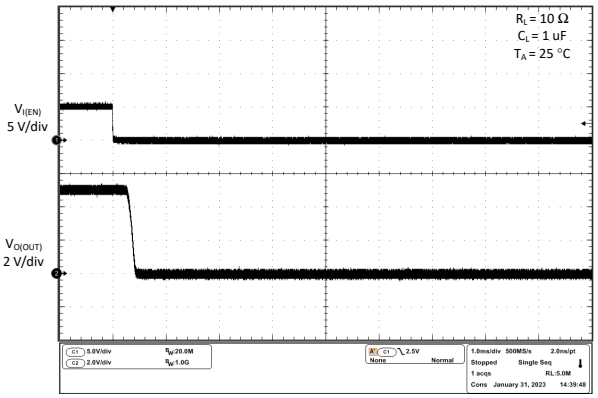

Figure 6-39. Turnoff Delay and Fall Time With 1µF Load

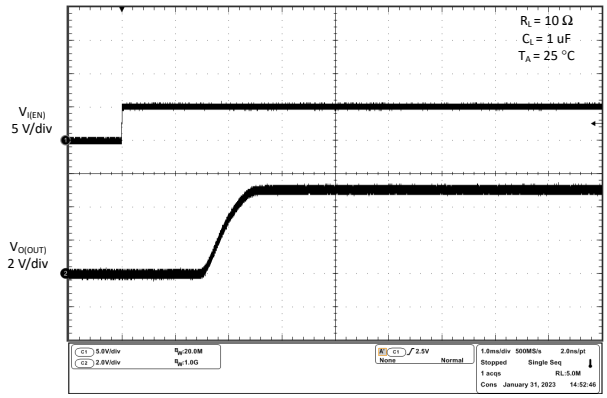

Figure 6-40. Turnon Delay and Rise Time With 100µF Load

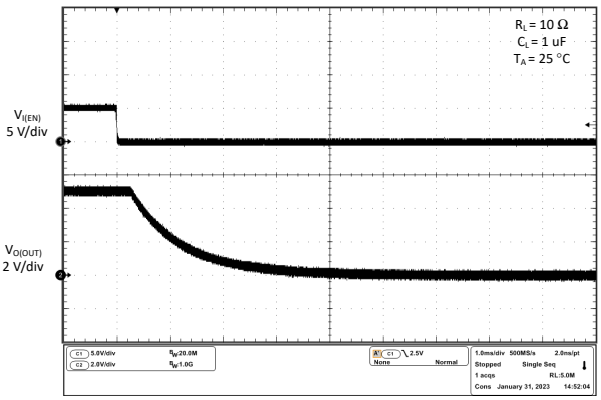

Figure 6-41. Turnoff Delay and Fall Time With 100µF Load

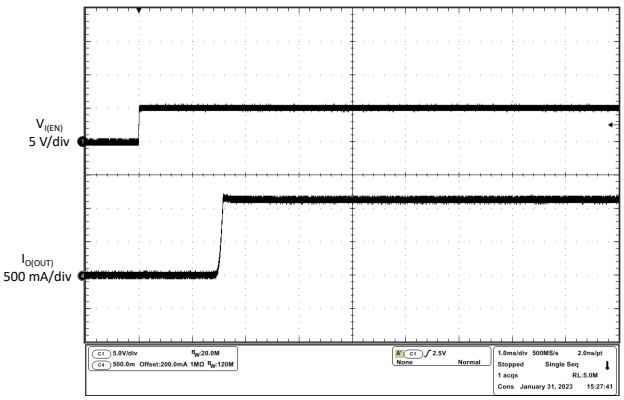

Figure 6-42. Short-Circuit Current, Device Enabled Into Short

Copyright © 2026 Texas Instruments Incorporated

6.7 Typical Characteristics (TPS2051BDBV and TPS2052BD) (continued)

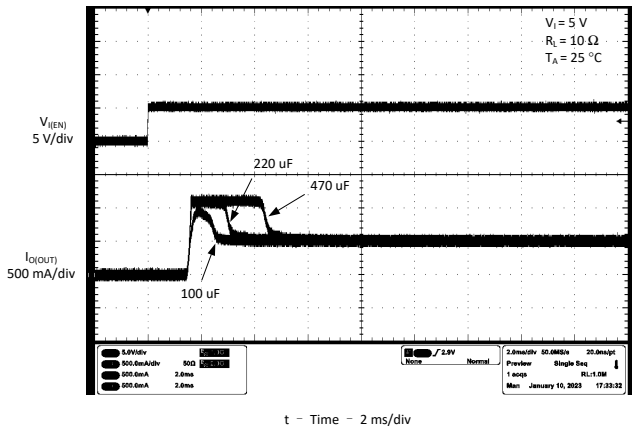

Figure 6-43. Inrush Current With Different Load Capacitance

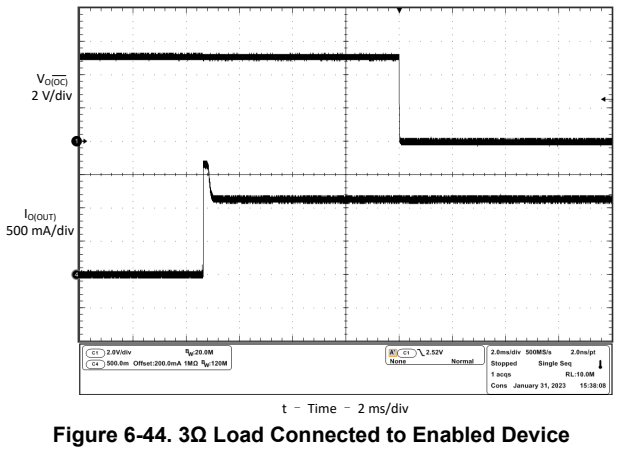

Figure 6-44. 3Ω Load Connected to Enabled Device

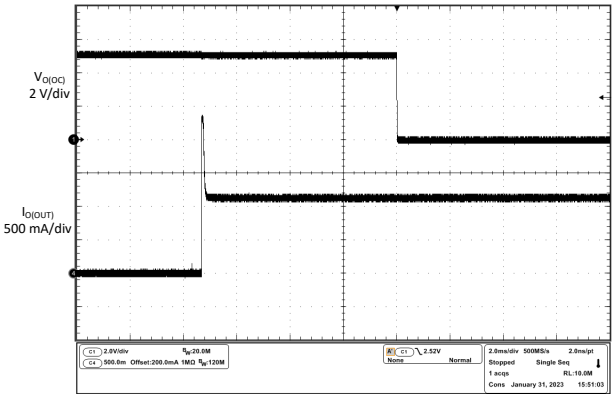

Figure 6-45. 2Ω Load Connected to Enabled Device

7 Parameter Measurement Information

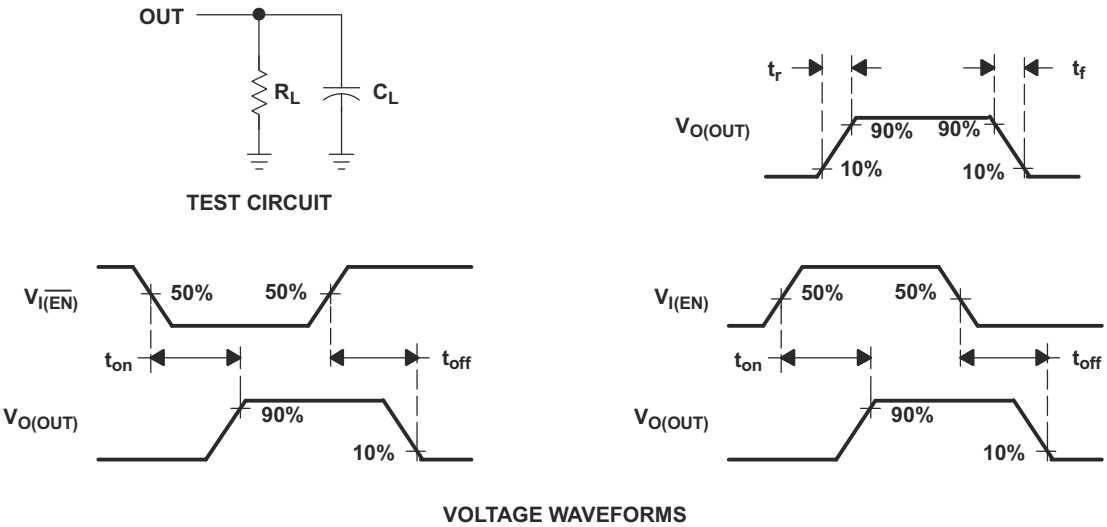

Figure 7-1. Test Circuit and Voltage Waveforms

8 Detailed Description

8.1 Overview

The TPS20xxB are current-limited, power-distribution switches providing 0.5A continuous load current. These devices incorporates 70mΩ N-channel MOSFET power switches for power-distribution systems that require multiple power switches in one package. Gate driver is provided by an internal charge pump designed to minimize current surges during switching. The charge pump requires no external components and allows operation supplies as low as 2.7V.

8.2 Functional Block Diagrams

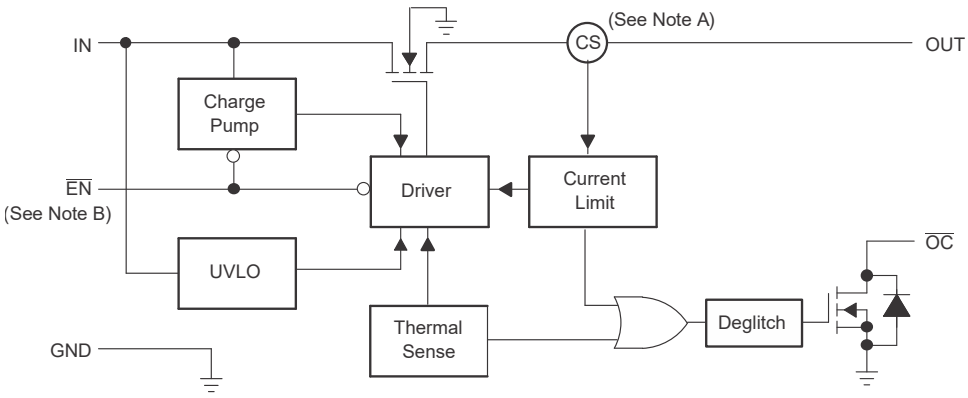

Note A: Current sense
Note B: Active low ($\overline{EN}$) for TPS2041B; Active high (EN) for TPS2051B

Figure 8-1. Functional Block Diagram (TPS2041B and TPS2051B)

Copyright © 2026 Texas Instruments Incorporated

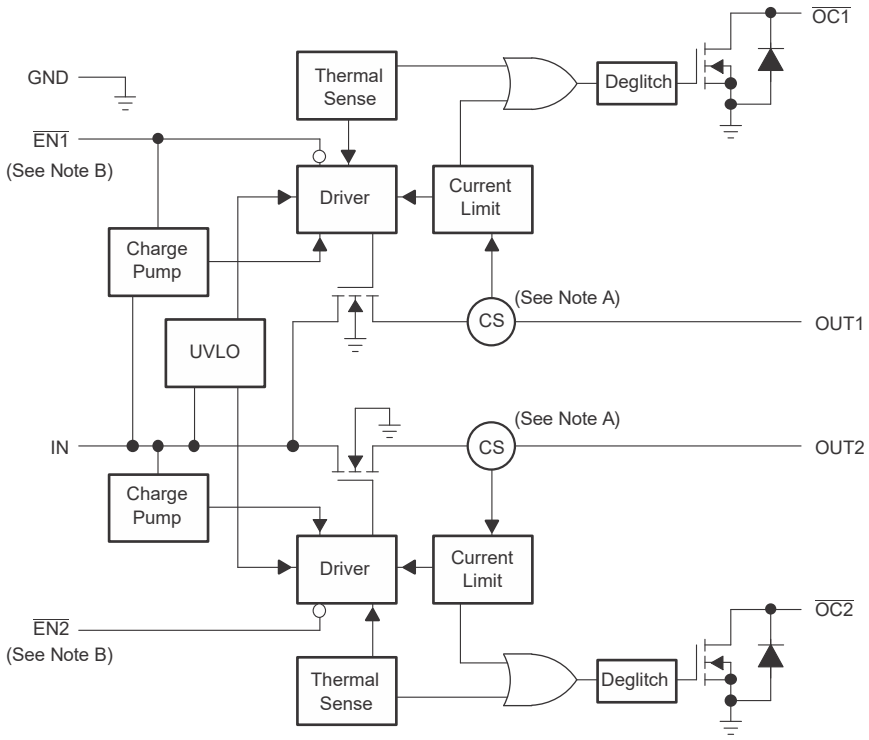

Note A: Current sense

Note B: Active low ($\overline{ENx}$) for TPS2042B; Active high (ENx) for TPS2052B

Figure 8-2. Functional Block Diagram (TPS2042B and TPS2052B)

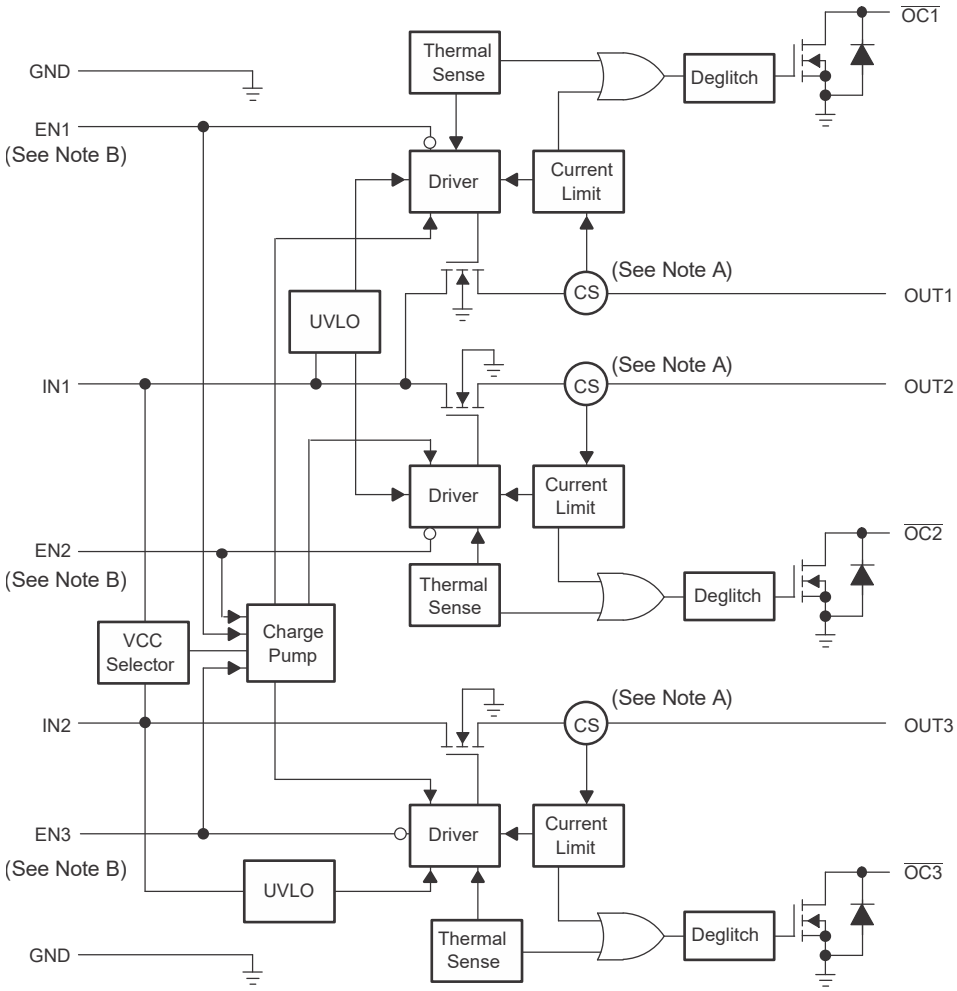

Note A: Current sense

Note B: Active low ($\overline{\text{ENx}}$) for TPS2043B; Active high (ENx) for TPS2053B

Figure 8-3. Functional Block Diagram (TPS2043B and TPS2053B)

Copyright © 2026 Texas Instruments Incorporated

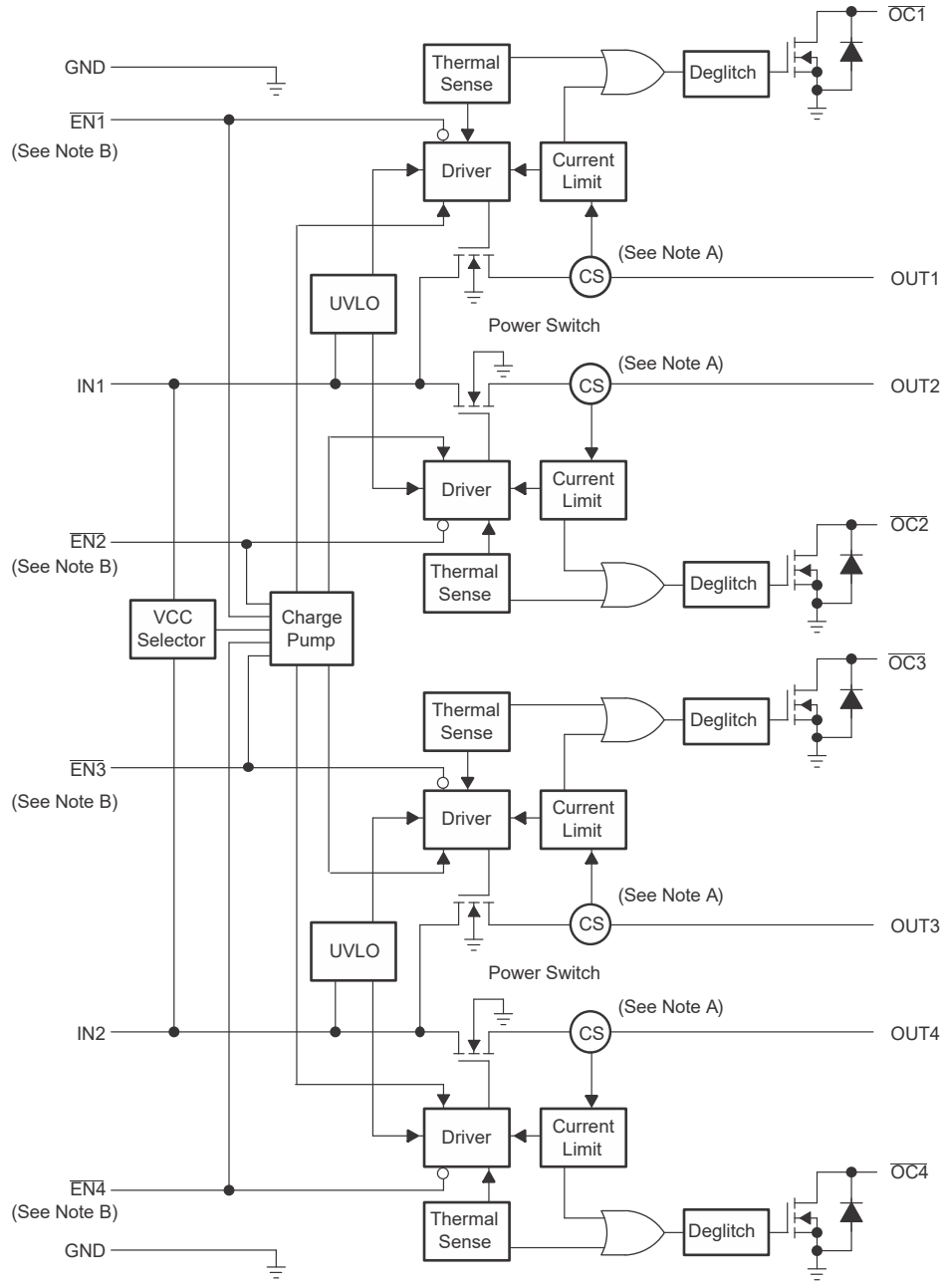

Note A: Current sense

Note B: Active low ($\overline{ENx}$) for TPS2044B; Active high (ENx) for TPS2054B

Figure 8-4. Functional Block Diagram (TPS2044B and TPS2054B)

8.3 Feature Description

8.3.1 Power Switch

The power switch is an N-channel MOSFET with a low on-state resistance. Configured as a high-side switch, the power switch prevents current flow from OUT to IN and IN to OUT when disabled. The power switch supplies a minimum current of 500mA.

8.3.2 Charge Pump

An internal charge pump supplies power to the driver circuit and provides the necessary voltage to pull the gate of the MOSFET above the source. The charge pump operates from input voltages as low as 2.7V and requires little supply current.

8.3.3 Driver

The driver controls the gate voltage of the power switch. To limit large current surges and reduce the associated electromagnetic interference (EMI) produced, the driver incorporates circuitry that controls the rise times and fall times of the output voltage.

8.3.4 Enable ($\overline{ENx}$)

The logic enable pin disables the power switch and the bias for the charge pump, driver, and other circuitry to reduce the supply current. The supply current reduces to less than 1µA or 2µA when a logic high is present on $\overline{EN}$. A logic zero input on $\overline{EN}$ restores bias to the drive and control circuits and turns the switch on. The enable input is compatible with both TTL and CMOS logic levels.

8.3.5 Enable (ENx)

The logic enable disables the power switch and the bias for the charge pump, driver, and other circuitry to reduce the supply current. The supply current is reduced to less than 1µA or 2µA when a logic low is present on ENx. A logic high input on ENx restores bias to the drive and control circuits and turns the switch on. The enable input is compatible with both TTL and CMOS logic levels.

8.3.6 Current Sense

A sense FET monitors the current supplied to the load. The sense FET measures current more efficiently than conventional resistance methods. When an overload or short circuit is encountered, the current-sense circuitry sends a control signal to the driver. The driver in turn reduces the gate voltage and drives the power FET into its saturation region, which switches the output into a constant-current mode and holds the current constant while varying the voltage on the load.

8.3.7 Overcurrent

A sense FET is employed to check for overcurrent conditions. Unlike current-sense resistors, sense FETs do not increase the series resistance of the current path. When an overcurrent condition is detected, the device maintains a constant output current and reduces the output voltage accordingly. Complete shutdown occurs only if the fault is present long enough to activate thermal limiting.

There are two kinds of current limit profiles for the TPS20xxB family of devices.

The TPS20x3BD, TPS20x4BD, and TPS20x2BDRB devices have an output I vs V characteristic similar to the plot labeled **Current Limit with Peaking** in Figure 8-5. This type of limiting can be characterized by two parameters, the overcurrent trip threshold (I_{OC}), and the short-circuit output current threshold (I_{OS}).

The TPS20x1B and TPS20x2B devices in the D, DGN, and DBV packages have an output I vs V characteristic similar to the plot labeled **Flat Current Limit** in Figure 8-5. This type of limiting is characterized by one parameter, the short-circuit current (I_{OS}).

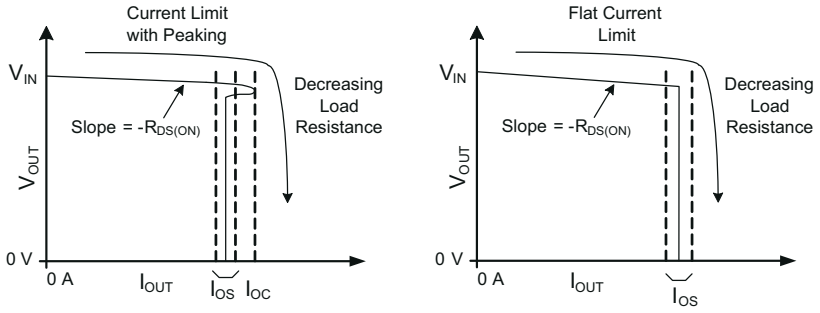

Figure 8-5. Current Limit Profiles

Copyright © 2026 Texas Instruments Incorporated

8.3.7.1 Overcurrent Conditions (TPS20x3BD, TPS20x4BD, and TPS20x2BDRB)

Three possible overload conditions can occur for TPS20x3BD, TPS20x4BD, and TPS20x2BDRB devices. In the first condition, the output shortens before the device is enabled or before $V_{I(IN)}$ is applied (see Figure 6-21 through Figure 6-24). The TPS20xxB senses the short and immediately switches into a constant-current output.

In the second condition, a short or an overload occurs while the device is enabled. At the instant the overload occurs, high currents can flow for a short period of time before the current-limit circuit can react. After the current-limit circuit has tripped (reached the overcurrent trip threshold (I_{OC})), the device switches into constant-current mode and current is limited at the short-circuit output current threshold (I_{OS}).

In the third condition, the load gradually increases beyond the recommended operating current. The current is permitted to rise until reaching the overcurrent trip threshold (I_{OC}) or until exceeding the thermal limit of the device. The TPS20x3BD, TPS20x4BD, and TPS20x2BDRB are capable of delivering current up to the current-limit threshold without damaging the device. Once the overcurrent trip threshold (I_{OC}) is reached, the device switches into its constant-current mode current is limited at the short-circuit output current threshold (I_{OS}).

8.3.7.2 Overcurrent Conditions (TPS20x1B and TPS20x2B in D, DGN, and DBV Packages)

Three possible overload conditions can occur for the TPS20x1B and TPS20x2B devices in the D, DGN, and DBV packages. In the first condition, the output shortens before the device is enabled or before $V_{I(IN)}$ is applied (see Figure 6-42 through Figure 6-45). The TPS20xxB senses the short and immediately switches into a constant-current output.

In the second condition, a short or an overload occurs while the device is enabled. At the instant the overload occurs, high currents can flow for a short period of time before the current-limit circuit can react. After the short-circuit output current threshold (I_{OS}) is reached, the device switches into constant-current mode.

In the third condition, the load gradually increases beyond the recommended operating current. After the short-circuit output current threshold (I_{OS}) is reached, the device switches into constant-current mode.

8.3.8 Overcurrent ($\overline{OCx}$)

The $\overline{OCx}$ open drain output is asserted (active low) when encountering an overcurrent or overtemperature condition. The output remains asserted until the removal of the overcurrent or overtemperature condition. A 10ms deglitch circuit prevents the $\overline{OCx}$ signal from oscillation or false triggering. If an overtemperature shutdown occurs, the $\overline{OCx}$ asserts instantaneously.

8.3.9 Thermal Sense

The TPS20xxB implements a thermal sensing to monitor the operating temperature of the power distribution switch. In an overcurrent or short-circuit condition, the junction temperature rises. When the die temperature rises to approximately 140°C due to overcurrent conditions, the internal thermal sense circuitry turns off the switch, thus preventing the device from damage. Hysteresis is built into the thermal sense, and after the device has cooled approximately 10 degrees, the switch turns back on. The switch continues to cycle off and on until the fault is removed. The open-drain false reporting output ($\overline{OCx}$) is asserted (active low) when an overtemperature shutdown or overcurrent occurs.

8.3.10 Undervoltage Lockout

A voltage sense circuit monitors the input voltage. When the input voltage is below approximately 2V, a control signal turns off the power switch.

8.4 Device Functional Modes

There are no other functional modes for TPS20xxB devices.

Copyright © 2026 Texas Instruments Incorporated

9 Application and Implementation

Note

Information in the following applications sections is not part of the TI component specification, and TI does not warrant its accuracy or completeness. TI's customers are responsible for determining suitability of components for their purposes, as well as validating and testing their design implementation to confirm system functionality.

9.1 Application Information

9.1.1 Universal Serial Bus (USB) Applications

The universal serial bus (USB) interface is a 12Mb/s, or 1.5Mb/s, multiplexed serial bus designed for low-to-medium bandwidth PC peripherals (for example, keyboards, printers, scanners, and mice). The four-wire USB interface is conceived for dynamic attach-detach (hot plug-unplug) of peripherals. Two lines are provided for differential data, and two lines are provided for 5V power distribution.

USB data is a 3.3V level signal, but power is distributed at 5V to allow for voltage drops in cases where power is distributed through more than one hub across long cables. Each function must provide its own regulated 3.3V from the 5V input or its own internal power supply.

The USB specification defines the following five classes of devices, each differentiated by power-consumption requirements:

- Hosts and self-powered hubs (SPH)
- Bus-powered hubs (BPH)
- Low-power, bus-powered functions
- High-power, bus-powered functions
- Self-powered functions

Self-powered and bus-powered hubs distribute data and power to downstream functions. The TPS20xxB can provide power-distribution solutions to many of these classes of devices.

9.2 Typical Application

9.2.1 Typical Application (TPS2042B)

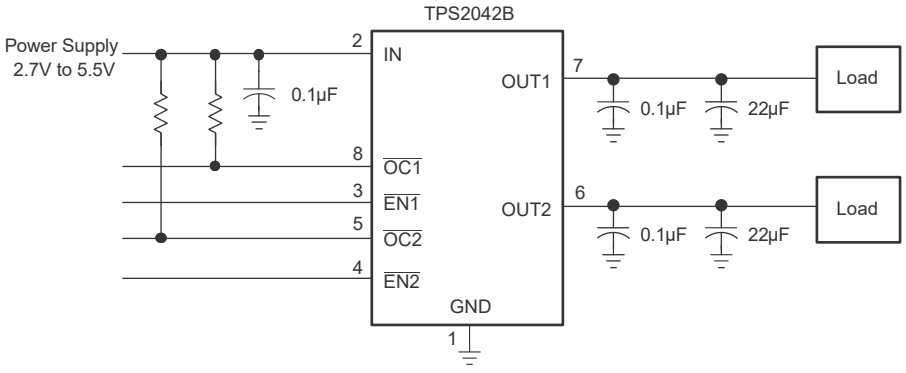

Figure 9-1. Typical Application (Example, TPS2042B)

Copyright © 2026 Texas Instruments Incorporated

9.2.1.1 Design Requirements

Table 9-1 shows the design parameters for this application.

Table 9-1. Design Parameters

DESIGN PARAMETER	VALUE
Input voltage	5V
Output1 voltage	5V
Output2 voltage	5V
Output1 current	0.5A
Output2 current	0.5A

9.2.1.2 Detailed Design Procedure

9.2.1.2.1 Power-Supply Considerations

TI recommends placing ceramic bypass capacitor from 0.01µF to 0.1µF between IN and GND, close to the device. When the output load is heavy, TI recommends placing a high-value electrolytic capacitor on the necessary output pins. This precaution reduces power-supply transients that can cause ringing on the input. Additionally, bypassing the output with a from 0.01µF to 0.1µF ceramic capacitor improves the immunity of the device to short-circuit transients.

9.2.1.2.2 $\overline{OC}$ Response

The $\overline{OCx}$ open-drain output is asserted (active low) when an overcurrent or overtemperature shutdown condition is encountered after a 10ms deglitch timeout. The output remains asserted until the overcurrent or overtemperature condition is removed. Connecting a heavy capacitive load to an enabled device can cause a momentary overcurrent condition; however, no false reporting on $\overline{OCx}$ occurs due to the 10ms deglitch circuit. The TPS20xxB is designed to eliminate false overcurrent reporting. The internal overcurrent deglitch eliminates the need for external components to remove unwanted pulses. $\overline{OCx}$ is not deglitched when the switch is turned off due to an overtemperature shutdown.

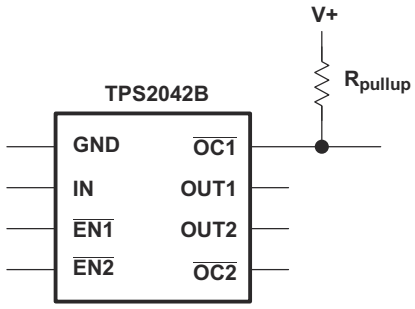

Figure 9-2. Typical Circuit for the $\overline{OC}$ Pin (Example, TPS2042B)

9.2.1.3 Application Curves

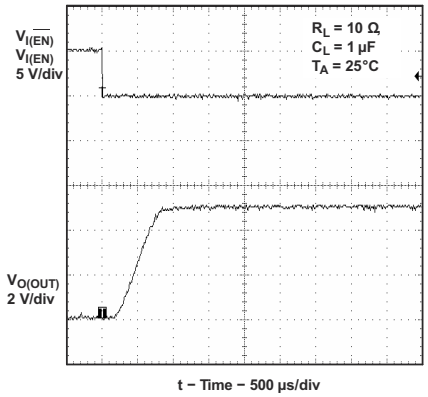

Figure 9-3. Turnon Delay and Rise Time With 1µF Load

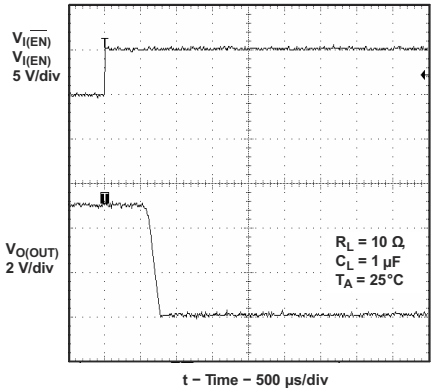

Figure 9-4. Turnoff Delay and Fall Time With 1µF Load

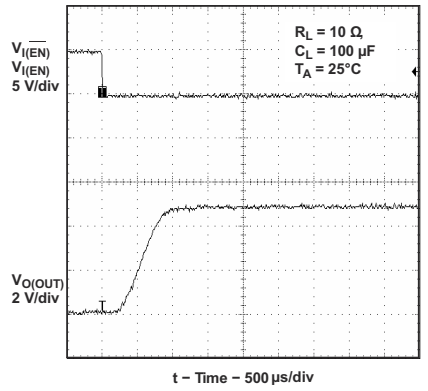

Figure 9-5. Turnon Delay and Rise Time With 100µF Load

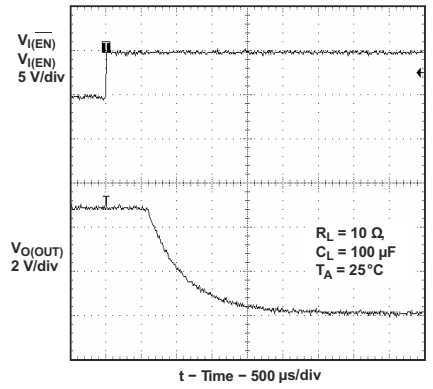

Figure 9-6. Turnoff Delay and Fall Time With 100µF Load

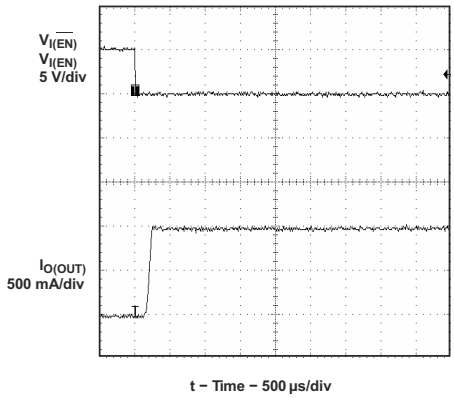

Figure 9-7. Short-Circuit Current, Device Enabled Into Short

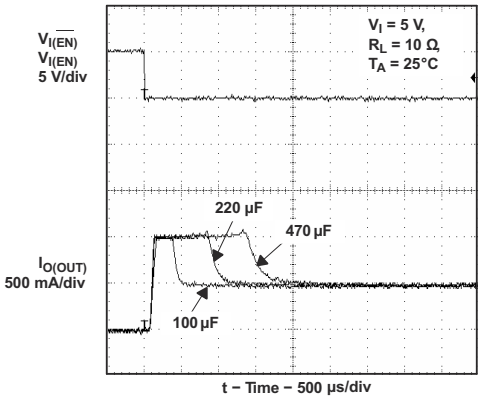

Figure 9-8. Inrush Current With Different Load Capacitance

Copyright © 2026 Texas Instruments Incorporated

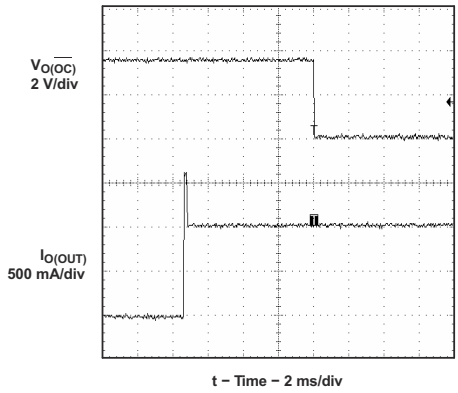

Figure 9-9. 3Ω Load Connected to Enabled Device

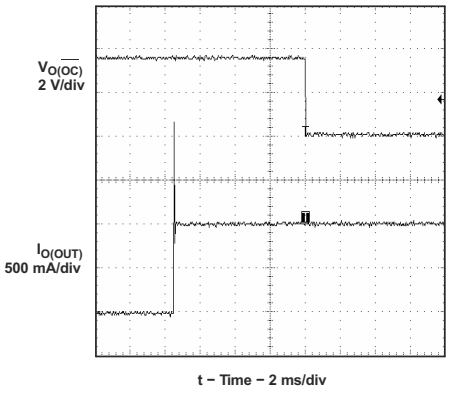

Figure 9-10. 2Ω Load Connected to Enabled Device

9.2.2 Host and Self-Powered and Bus-Powered Hubs

Hosts and self-powered hubs have a local power supply that powers the embedded functions and the downstream ports (see Figure 9-11 and Figure 9-12). This power supply must provide from 5.25V to 4.75V to the board side of the downstream connection under full-load and no-load conditions. Hosts and SPHs are required to have current-limit protection and must report overcurrent conditions to the USB controller. Typical SPHs are desktop PCs, monitors, printers, and stand-alone hubs.

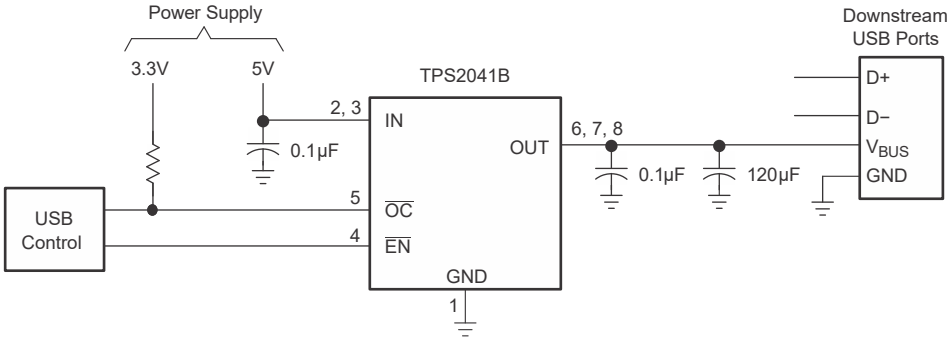

Figure 9-11. Typical One-Port USB Host and Self-Powered Hub

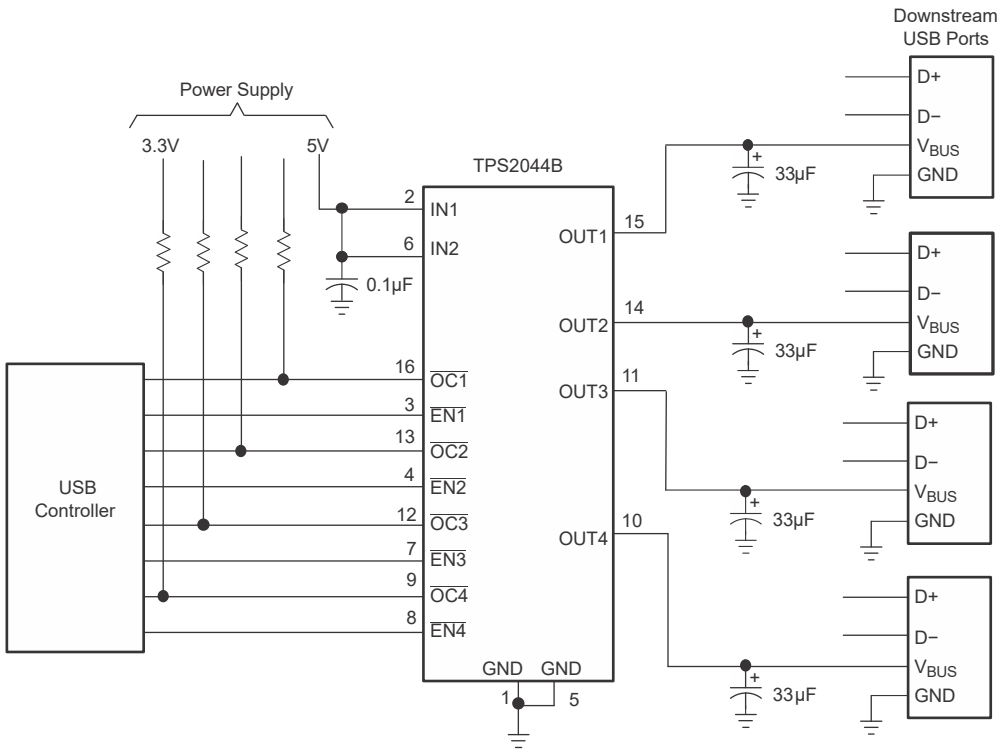

Figure 9-12. Typical Four-Port USB Host and Self-Powered Hub

9.2.2.1 Design Requirements

9.2.2.1.1 USB Power-Distribution Requirements

USB can be implemented in several ways, and, regardless of the type of USB device being developed, implement several power-distribution features.

- Hosts and self-powered hubs must:
  - Current-limit downstream ports
  - Report overcurrent conditions on USB V_{BUS}
- Bus-powered hubs must:
  - Enable/disable power to downstream ports
  - Power up at <100mA
  - Limit inrush current (<44Ω and 10µF)
- Functions must:
  - Limit inrush currents
  - Power up at <100mA

The feature set of the TPS20xxB allows TPS20xxB to meet each of these requirements. The integrated current-limiting and overcurrent reporting is required by hosts and self-powered hubs. The logic-level enable and controlled rise times meet the need of both input and output ports on bus-powered hubs, as well as the input ports for bus-powered functions (see Figure 9-13 through Figure 9-16).

Copyright © 2026 Texas Instruments Incorporated

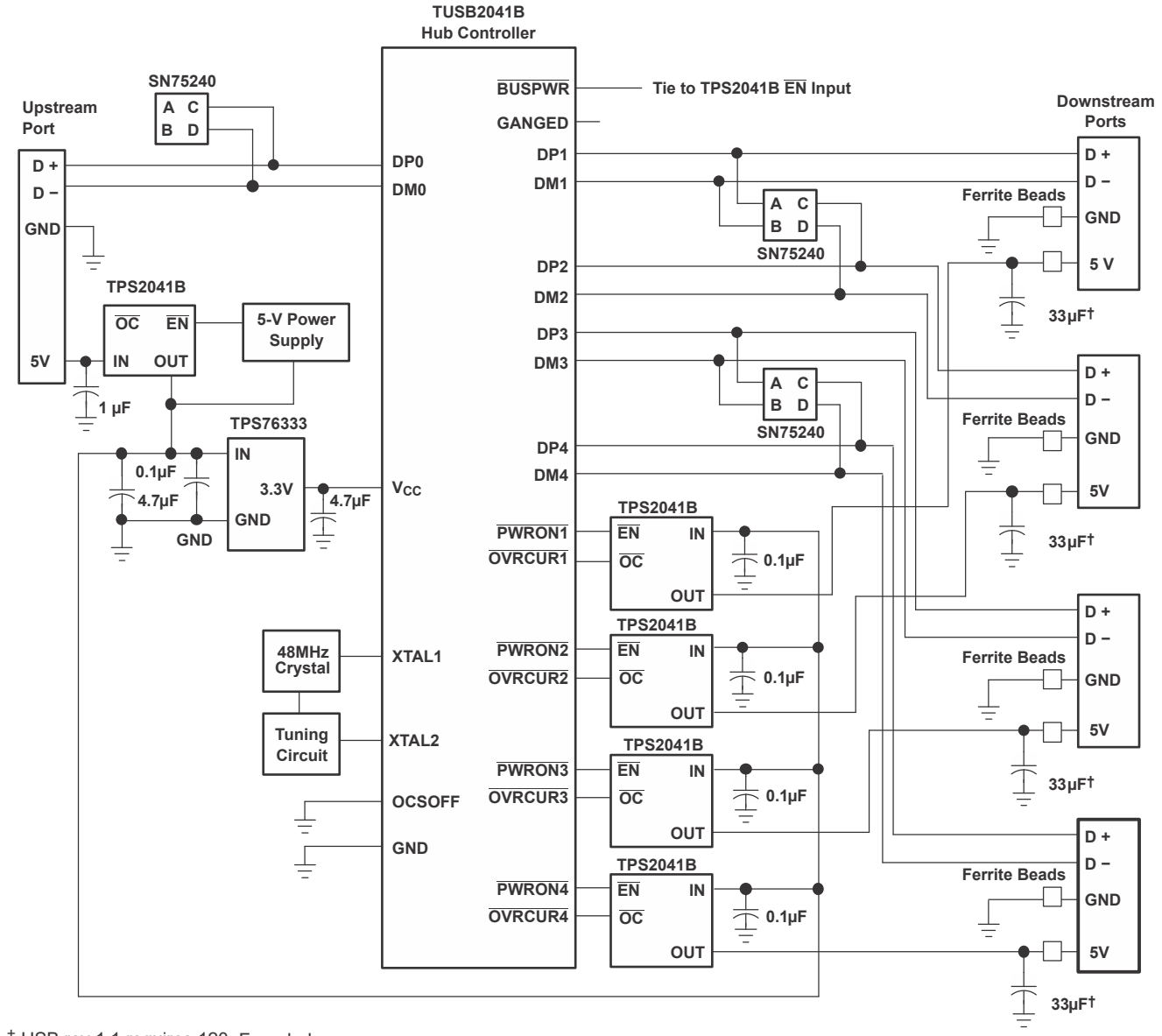

† USB rev 1.1 requires 120µF per hub.

Figure 9-13. Hybrid Self and Bus-Powered Hub Implementation, TPS2041B and TPS2051B

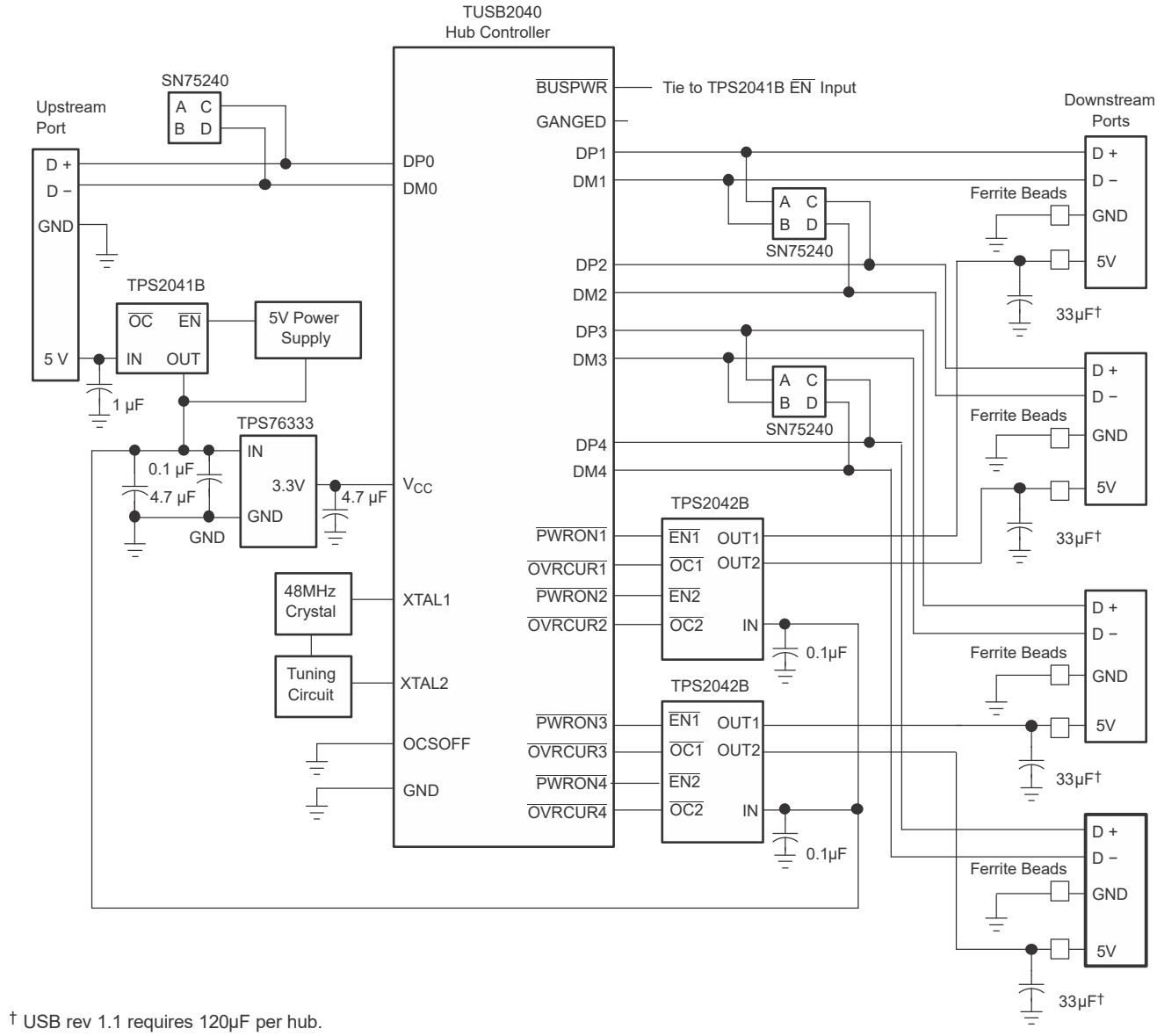

† USB rev 1.1 requires 120µF per hub.

Figure 9-14. Hybrid Self and Bus-Powered Hub Implementation, TPS2042B and TPS2052B

Copyright © 2026 Texas Instruments Incorporated

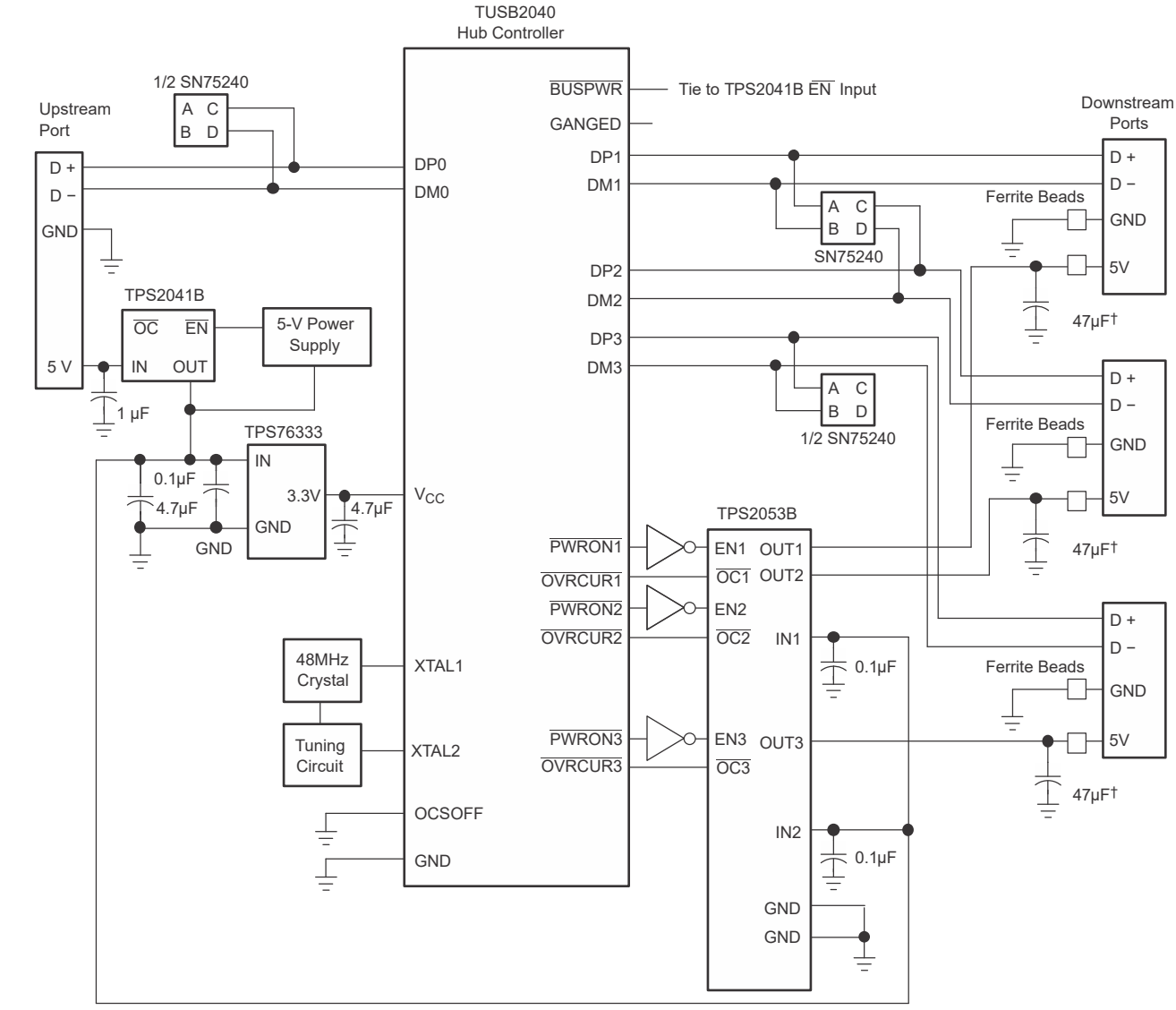

† USB rev 1.1 requires 120µF per hub.

Figure 9-15. Hybrid Self and Bus-Powered Hub Implementation, TPS2043B and TPS2053B

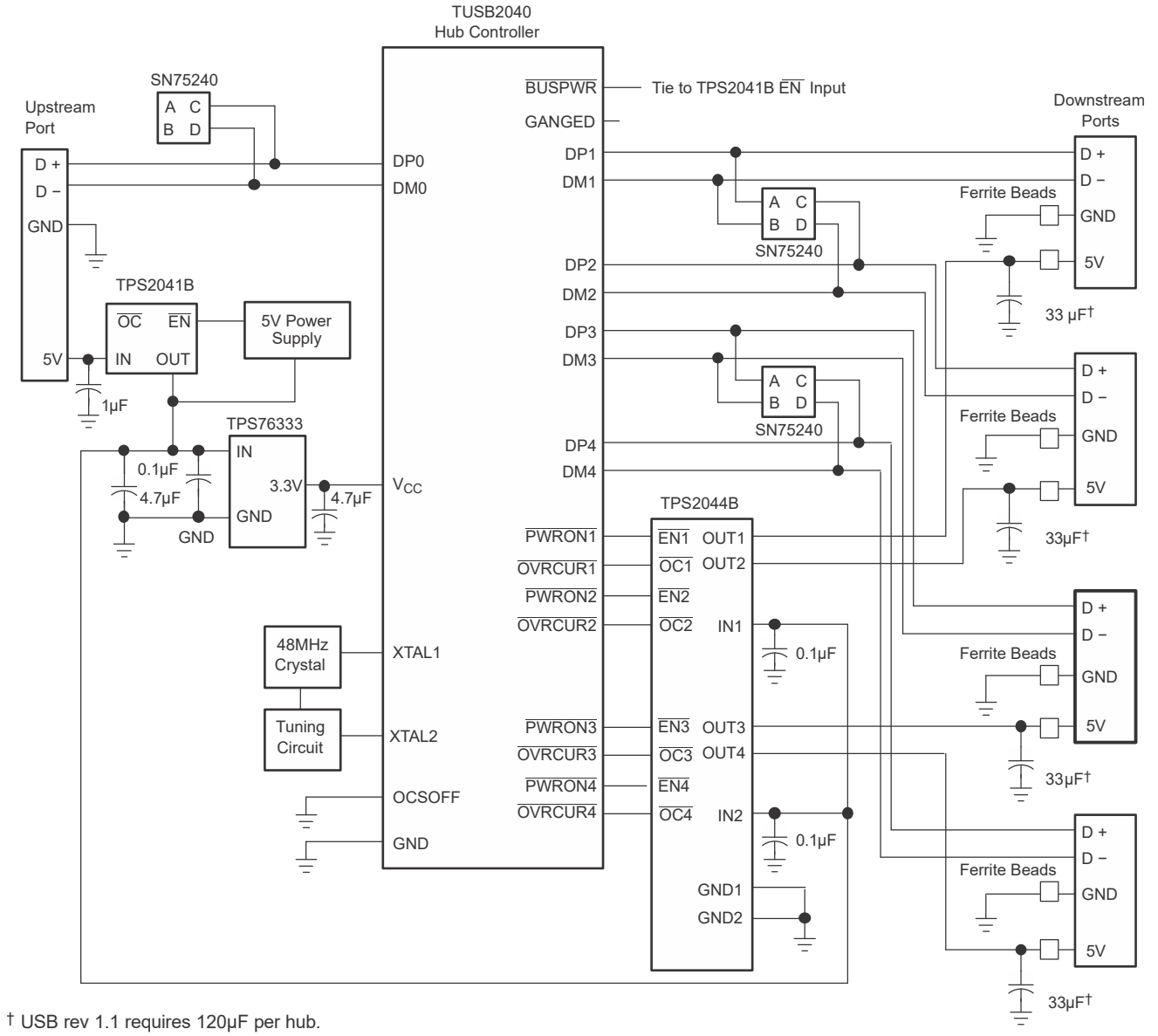

† USB rev 1.1 requires 120µF per hub.

Figure 9-16. Hybrid Self and Bus-Powered Hub Implementation, TPS2044B and TPS2054B

9.2.2.2 Detailed Design Procedure

Bus-powered hubs obtain all power from upstream ports and often contain an embedded function. The hubs are required to power up with less than one unit load. The BPH usually has one embedded function, and power is always available to the controller of the hub. If the embedded function and hub require more than 100mA on power up, the power to the embedded function may need to be kept off until enumeration is completed. This can be accomplished by removing power or by shutting off the clock to the embedded function. Power switching the embedded function is not necessary if the aggregate power draw for the function and controller is less than one unit load. The total current drawn by the bus-powered device is the sum of the current to the controller, the embedded function, and the downstream ports, and it is limited to 500mA from an upstream port.

9.2.2.2.1 Low-Power Bus-Powered and High-Power Bus-Powered Functions

Both low-power and high-power bus-powered functions obtain all power from upstream ports; low-power functions always draw less than 100mA; high-power functions must draw less than 100mA at power up and

Copyright © 2026 Texas Instruments Incorporated

can draw up to 500mA after enumeration. If the load of the function is more than the parallel combination of 44 Ω and 10µF at power up, the device must implement inrush current limiting (see Figure 9-17).

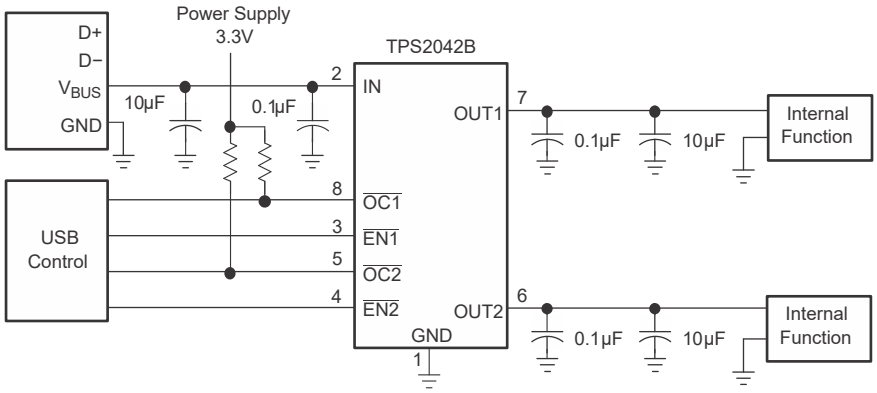

Figure 9-17. High-Power Bus-Powered Function (Example, TPS2042B)

9.2.2.3 Application Curves

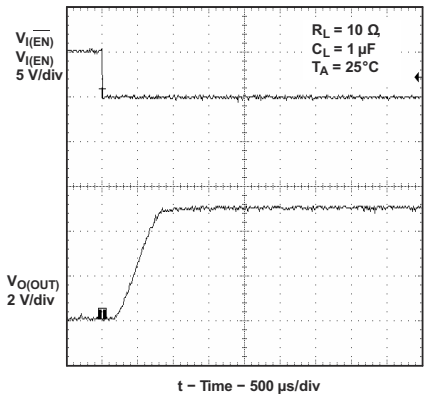

Figure 9-18. Turnon Delay and Rise Time With 1µF Load

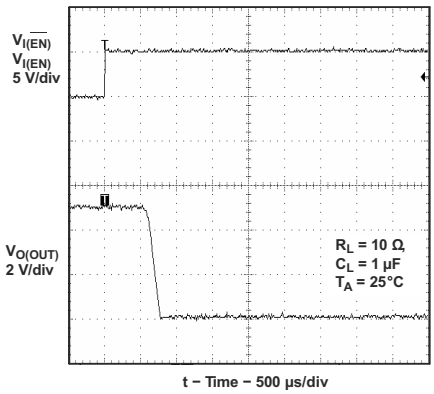

Figure 9-19. Turnoff Delay and Fall Time with 1µF Load

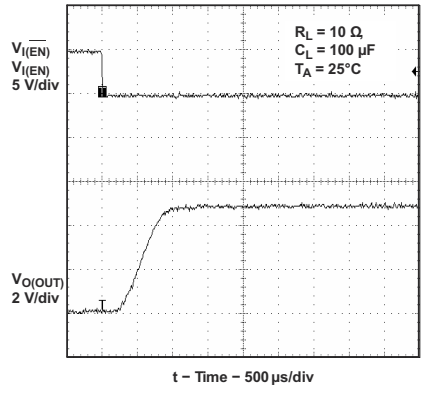

Figure 9-20. Turnon Delay and Rise Time With 100µF Load

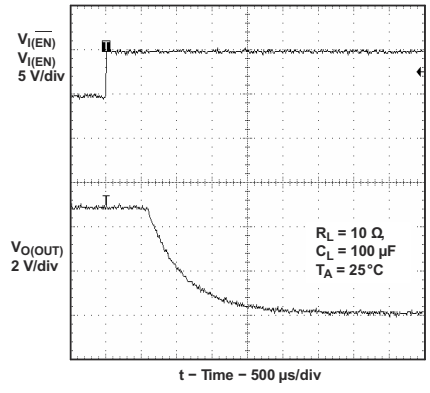

Figure 9-21. Turnoff Delay and Fall Time With 100µF Load

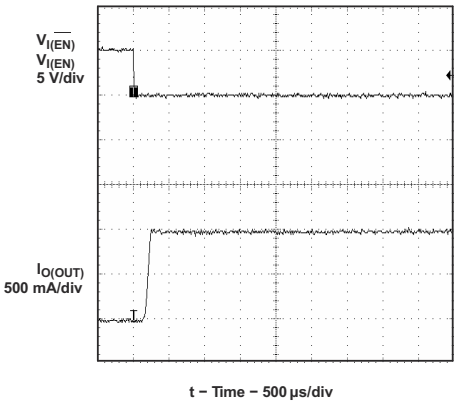

Figure 9-22. Short-Circuit Current, Device Enabled Into Short

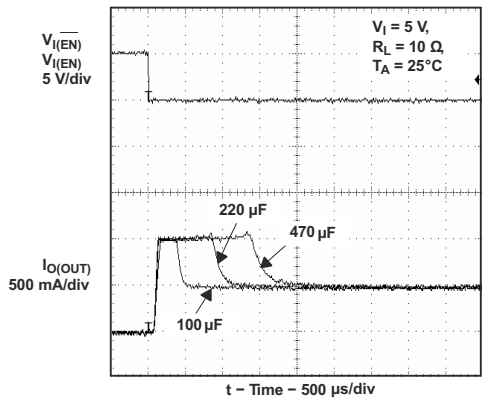

Figure 9-23. Inrush Current With Different Load Capacitance

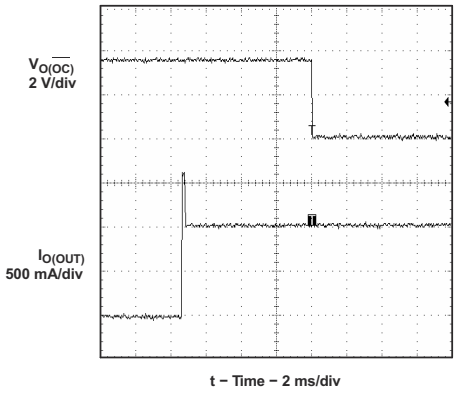

Figure 9-24. 3Ω Load Connected to Enabled Device

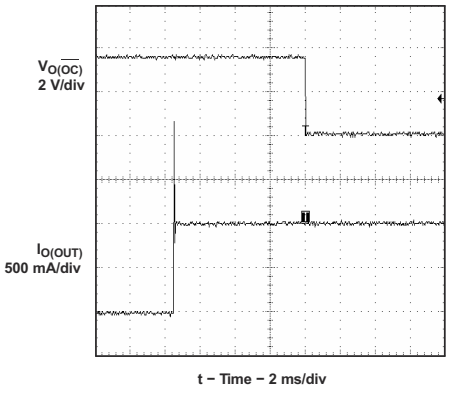

Figure 9-25. 2Ω Load Connected to Enabled Device

9.2.3 Generic Hot-Plug Applications

In many applications it can be necessary to remove modules or PC boards while the main unit is still operating. These are considered hot-plug applications. Such implementations require the control of current surges seen by the main power supply and the card being inserted. The most effective way to control these surges is to limit and slowly ramp the current and voltage being applied to the card, similar to the way in which a power supply normally turns on. Due to the controlled rise times and fall times of the TPS20xxB, these devices can be used to provide a softer start-up to devices being hot-plugged into a powered system. The UVLO feature of the TPS20xxB also ensures that the switch is off after the card has been removed, and that the switch is off during the next insertion. The UVLO feature insures a soft start with a controlled rise time for every insertion of the card or module.

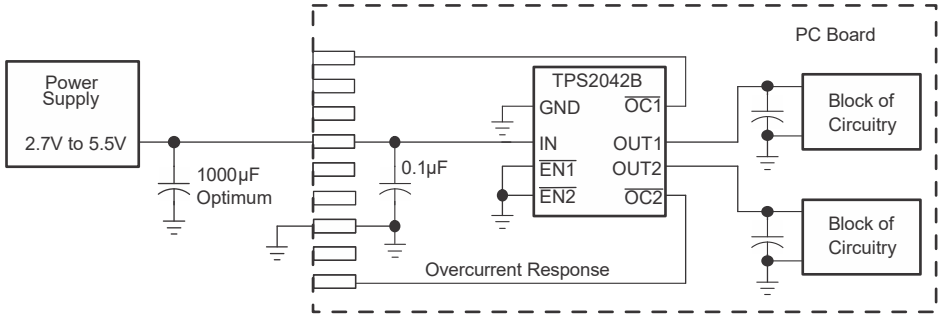

Figure 9-26. Typical Hot-Plug Implementation (Example, TPS2042B)

Copyright © 2026 Texas Instruments Incorporated

By placing the TPS20xxB between the V_{CC} input and the rest of the circuitry, the input power reaches these devices first after insertion. The typical rise time of the switch is approximately 1ms, providing a slow voltage ramp at the output of the device. This implementation controls system surge currents and provides a hot-plugging mechanism for any device.

9.2.3.1 Design Requirements

Table 9-2 shows the design parameters for this application.

Table 9-2. Design Parameters

DESIGN PARAMETER	VALUE
Input voltage	5V
Output1 voltage	5V
Output2 voltage	5V
Output1 current	0.5A
Output2 current	0.5A

9.2.3.2 Detailed Design Procedure

To begin the design process, know a few parameters. The designer must know the following:

- Normal input operation voltage
- Current limit

Input and output capacitance improves the performance of the device; the actual capacitance must be optimized for the particular application. For all applications, TI recommends a 0.1µF or greater ceramic bypass capacitor between IN and GND, as close to the device as possible for local noise decoupling. This precaution reduces ringing on the input due to power-supply transients. Additional input capacitance can be needed on the input to reduce voltage undershoot from exceeding the UVLO of other load share one power rail with TPS2042 device or overshoot from exceeding the absolute-maximum voltage of the device during heavy transient conditions. Preventing voltage undershoots and overshoots is especially important during bench testing when using long, inductive cables to connect the evaluation board to the bench power supply. Output capacitance is not required. TI recommends placing a high-value electrolytic capacitor on the output pin when large transient currents are expected on the output to reduce the undershoot, which is caused by the inductance of the output power bus just after a short has occurred and the TPS2042 device has abruptly reduced OUT current. Energy stored in the inductance drives the OUT voltage down and potentially negative as it discharges.

9.2.3.3 Application Curves

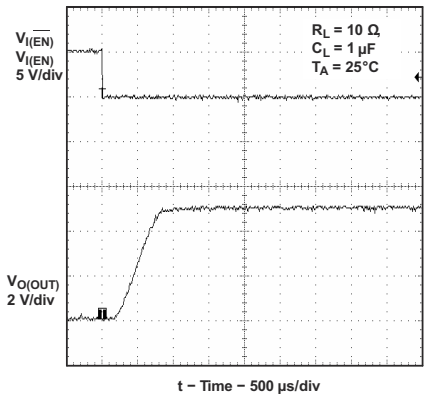

Figure 9-27. Turnon Delay and Rise Time With 1µF Load

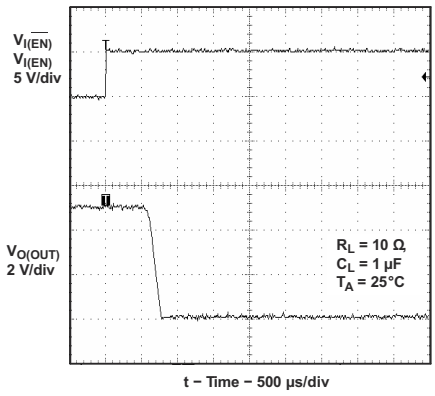

Figure 9-28. Turnoff Delay and Fall Time With 1µF Load

Copyright © 2026 Texas Instruments Incorporated

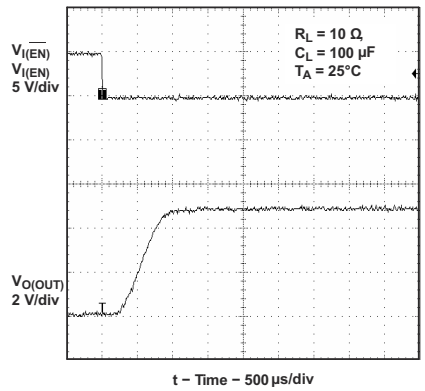

Figure 9-29. Turnon Delay and Rise Time With 100µF Load

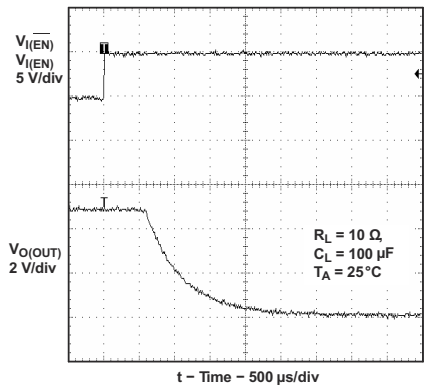

Figure 9-30. Turnoff Delay and Fall Time With 100µF Load

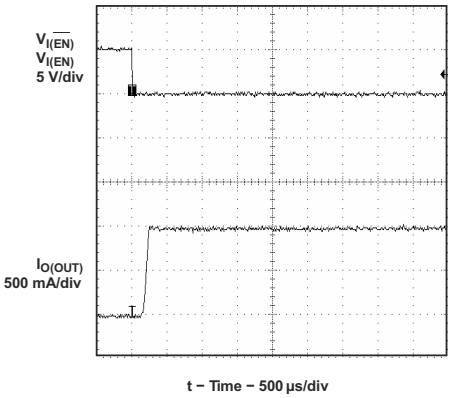

Figure 9-31. Short-Circuit Current, Device Enabled Into Short

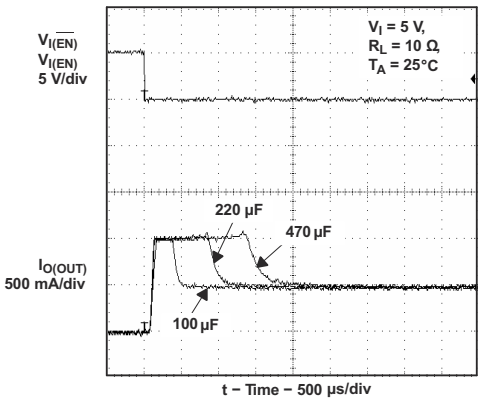

Figure 9-32. Inrush Current With Different Load Capacitance

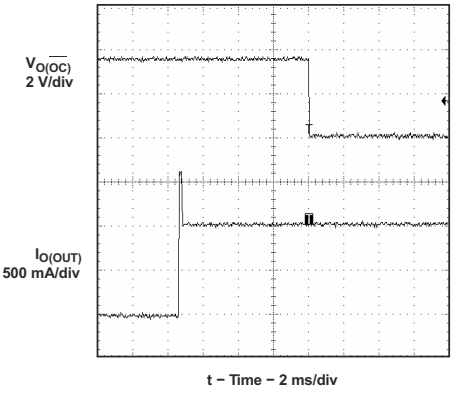

Figure 9-33. 3Ω Load Connected to Enabled Device

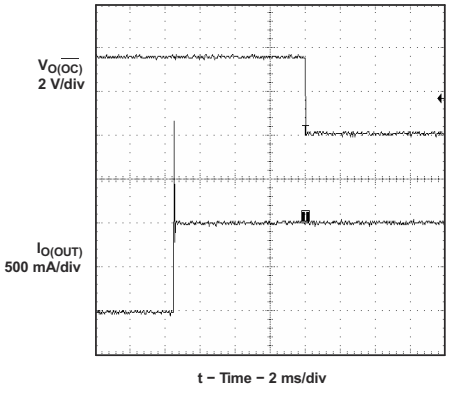

Figure 9-34. 2Ω Load Connected to Enabled Device

9.3 Power Supply Recommendations

9.3.1 Undervoltage Lockout (UVLO)

An undervoltage lockout establishes that the power switch is in the off state at power up. Whenever the input voltage falls below approximately 2V, the power switch is quickly turned off. The UVLO facilitates the design of hot-insertion systems where it is not possible to turn off the power switch before removing the input power. The UVLO also keeps the switch from turning on until the power supply has reached at least 2V, even if the switch is enabled. On reinsertion, the power switch turns on, with a controlled rise time to reduce EMI and voltage overshoots.

Copyright © 2026 Texas Instruments Incorporated

9.4 Layout

9.4.1 Layout Guidelines

- Place the 100nF bypass capacitor near the IN and GND pins, and make the connections using a low-inductance trace.
- Placing a high-value electrolytic capacitor and a 100nF bypass capacitor on the output pin is recommended when large transient currents are expected on the output.
- The PowerPAD must be directly connected to PCB ground plane using wide and short copper trace.

9.4.2 Layout Example

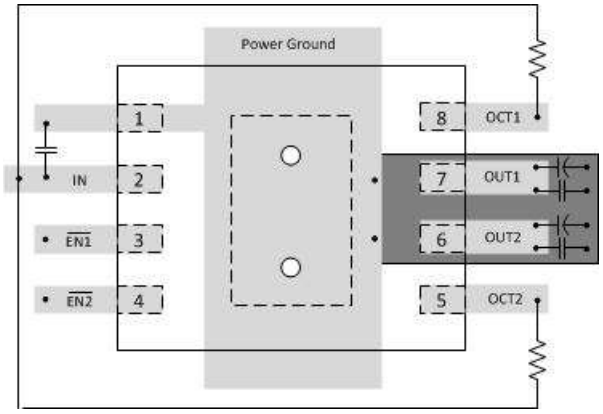

Figure 9-35. Layout Recommendation

9.4.3 Power Dissipation

The low on-resistance on the N-channel MOSFET allows the small surface-mount packages to pass large currents. The thermal resistances of these packages are high compared to those of power packages; it is good design practice to check power dissipation and junction temperature. Begin by determining the $r_{DS(on)}$ of the N-channel MOSFET relative to the input voltage and operating temperature. As an initial estimate, use the highest operating ambient temperature of interest and read $r_{DS(on)}$ from Figure 6-11. Using this value, calculate the power dissipation per switch using Equation:

$$D_P = r_{DS(on)} \times I^2$$

Multiply this number by the number of switches in use. This step renders the total power dissipation from the N-channel MOSFETs.

Finally, calculate the junction temperature with Equation:

$$T_J = P_D \times R_{\theta JA} + T_A$$

where

- T_A= Ambient temperature °C
- $R_{\theta JA}$ = Thermal resistance
- P_D = Total power dissipation based on number of switches in use

Compare the calculated junction temperature with the initial estimate. If the numbers are not within a few degrees, repeat the calculation, using the calculated value as the new estimate. Two or three iterations are generally sufficient to get a reasonable answer.

9.4.4 Thermal Protection

Thermal protection prevents damage to the IC when heavy-overload or short-circuit faults are present for extended periods of time. The TPS20xxB implements a thermal sensing to monitor the operating junction

Copyright © 2026 Texas Instruments Incorporated

temperature of the power distribution switch. In an overcurrent or short-circuit condition, the junction temperature rises due to excessive power dissipation. Once the die temperature rises to approximately 140°C due to overcurrent conditions, the internal thermal sense circuitry turns the power switch off, thus preventing the power switch from damage. Hysteresis is built into the thermal sense circuit, and after the device has cooled approximately 10°C, the switch turns back on. The switch continues to cycle in this manner until the load fault or input power is removed. The $\overline{\text{OC}}$x open-drain output is asserted (active low) when an overtemperature shutdown or overcurrent occurs.

Copyright © 2026 Texas Instruments Incorporated

10 Device and Documentation Support

10.1 Receiving Notification of Documentation Updates

To receive notification of documentation updates, navigate to the device product folder on ti.com. Click on *Notifications* to register and receive a weekly digest of any product information that has changed. For change details, review the revision history included in any revised document.

10.2 Support Resources

TI E2E™ support forums are an engineer's go-to source for fast, verified answers and design help — straight from the experts. Search existing answers or ask your own question to get the quick design help you need.

Linked content is provided "AS IS" by the respective contributors. They do not constitute TI specifications and do not necessarily reflect TI's views; see TI's Terms of Use.

10.3 Trademarks

PowerPAD™ and TI E2E™ are trademarks of Texas Instruments.
All trademarks are the property of their respective owners.

10.4 Electrostatic Discharge Caution



This integrated circuit can be damaged by ESD. Texas Instruments recommends that all integrated circuits be handled with appropriate precautions. Failure to observe proper handling and installation procedures can cause damage.

ESD damage can range from subtle performance degradation to complete device failure. Precision integrated circuits may be more susceptible to damage because very small parametric changes could cause the device not to meet its published specifications.

10.5 Glossary

TI Glossary	This glossary lists and explains terms, acronyms, and definitions.

11 Revision History

NOTE: Page numbers for previous revisions may differ from page numbers in the current version.

Changes from Revision P (August 2024) to Revision Q (October 2026)	Page
• Updated the numbering format for tables, figures, and cross-references throughout the document	1
• Added MET listed certifications	1
• Updated from UL recognized to UL listed file no. E169910	1
• Added compliance with UL2367	1
• Added IEC62368-1 CB certified	1

Changes from Revision O (June 2024) to Revision P (August 2024)	Page
• Removed revision history comment about adding TPS2051BDB to this section	22

12 Mechanical, Packaging, and Orderable Information

The following pages include mechanical, packaging, and orderable information. This information is the most current data available for the designated devices. This data is subject to change without notice and revision of this document. For browser-based versions of this data sheet, refer to the left-hand navigation.

Copyright © 2026 Texas Instruments Incorporated

TPS2XXX/XXXX
DBV0005A-C02

PACKAGE OUTLINE

SOT-23 - 1.25 mm max height

SMALL OUTLINE TRANSISTOR

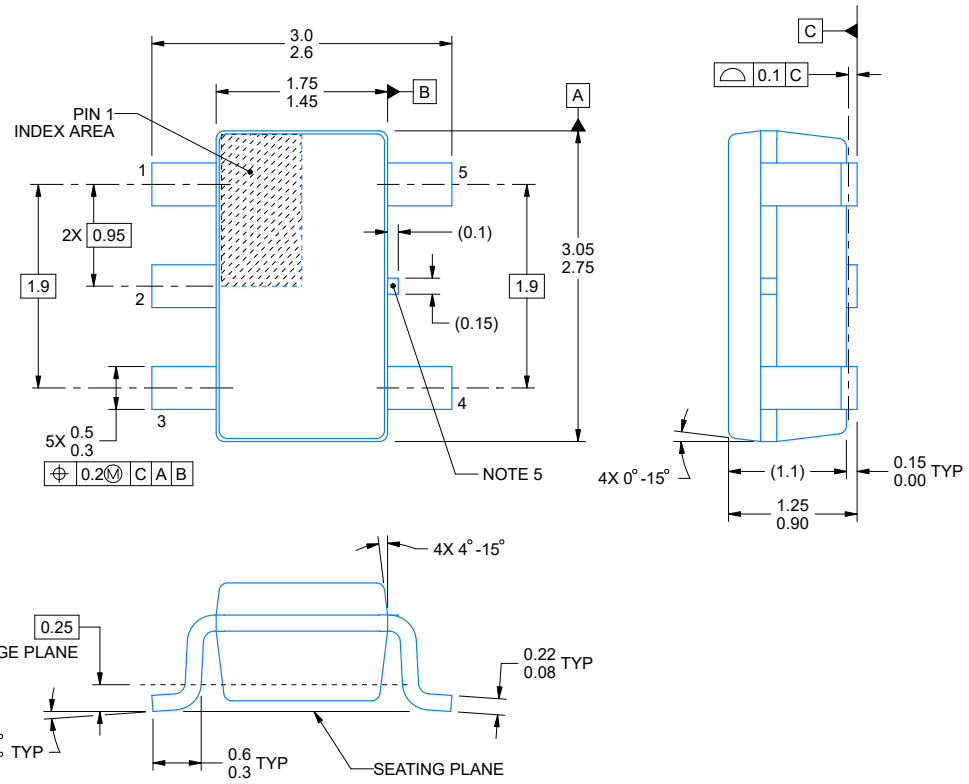

4231207/B 09/2024

NOTES:

1. All linear dimensions are in millimeters. Any dimensions in parenthesis are for reference only. Dimensioning and tolerancing per ASME Y14.5M.
2. This drawing is subject to change without notice.
3. Refernce JEDEC MO-178.
4. Body dimensions do not include mold flash, protrusions, or gate burrs. Mold flash, protrusions, or gate burrs shall not exceed 0.25 mm per side.
5. Support pin may differ or may not be present.

Copyright © 2026 Texas Instruments Incorporated

EXAMPLE BOARD LAYOUT

DBV0005A-C02

SOT-23 - 1.25 mm max height

SMALL OUTLINE TRANSISTOR

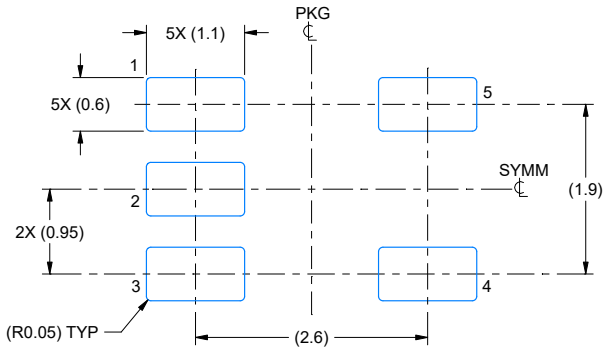

LAND PATTERN EXAMPLE
EXPOSED METAL SHOWN
SCALE:15X

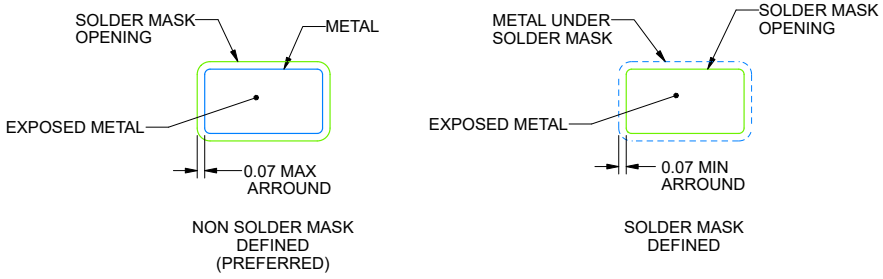

SOLDER MASK DETAILS

4231207/B 09/2024

NOTES: (continued)

6. Publication IPC-7351 may have alternate designs.
7. Solder mask tolerances between and around signal pads can vary based on board fabrication site.

Copyright © 2026 Texas Instruments Incorporated

EXAMPLE STENCIL DESIGN

DBV0005A-C02

SOT-23 - 1.25 mm max height

SMALL OUTLINE TRANSISTOR

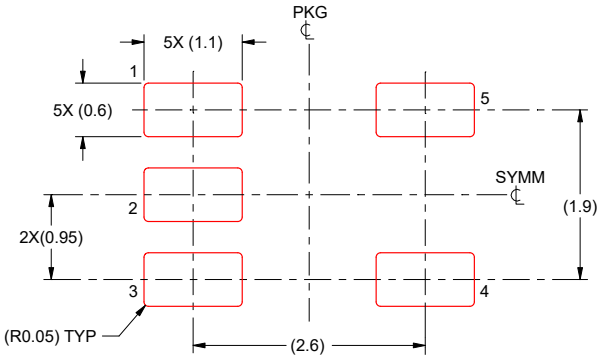

SOLDER PASTE EXAMPLE
BASED ON 0.125 mm THICK STENCIL
SCALE:15X

4231207/B 09/2024

NOTES: (continued)

8. Laser cutting apertures with trapezoidal walls and rounded corners may offer better paste release. IPC-7525 may have alternate design recommendations.
9. Board assembly site may have different recommendations for stencil design.

Copyright © 2026 Texas Instruments Incorporated

PACKAGING INFORMATION

Orderable part number	Status (1)	Material type (2)	Package | Pins	Package qty | Carrier	RoHS (3)	Lead finish/ Ball material (4)	MSL rating/ Peak reflow (5)	Op temp (°C)	Part marking (6)
TPS2041BDBVR	Active	Production	SOT-23 (DBV) | 5	3000 | LARGE T&R	Yes	SN	Level-1-260C-UNLIM	-40 to 125	PLII
TPS2041BDBVR.A	Active	Production	SOT-23 (DBV) | 5	3000 | LARGE T&R	Yes	SN	Level-1-260C-UNLIM	-40 to 125	PLII
TPS2041BDBVRG4	Active	Production	SOT-23 (DBV) | 5	3000 | LARGE T&R	Yes	SN	Level-1-260C-UNLIM	-40 to 125	PLII
TPS2041BDGNR	Active	Production	HVSSOP (DGN) | 8	2500 | LARGE T&R	Yes	NIPDAU	Level-1-260C-UNLIM	-40 to 125	2041B
TPS2041BDGNR.A	Active	Production	HVSSOP (DGN) | 8	2500 | LARGE T&R	Yes	NIPDAU	Level-1-260C-UNLIM	-40 to 125	2041B
TPS2041BDR	Active	Production	SOIC (D) | 8	2500 | LARGE T&R	Yes	NIPDAU	Level-1-260C-UNLIM	-40 to 125	2041B
TPS2041BDR.A	Active	Production	SOIC (D) | 8	2500 | LARGE T&R	Yes	NIPDAU	Level-1-260C-UNLIM	-40 to 125	2041B
TPS2041BDRG4	Active	Production	SOIC (D) | 8	2500 | LARGE T&R	Yes	NIPDAU	Level-1-260C-UNLIM	-40 to 125	2041B
TPS2042BDGNR	Active	Production	HVSSOP (DGN) | 8	2500 | LARGE T&R	Yes	NIPDAU	Level-1-260C-UNLIM	-40 to 125	2042B
TPS2042BDGNR.A	Active	Production	HVSSOP (DGN) | 8	2500 | LARGE T&R	Yes	NIPDAU	Level-1-260C-UNLIM	-40 to 125	2042B
TPS2042BDGNRG4	Active	Production	HVSSOP (DGN) | 8	2500 | LARGE T&R	Yes	NIPDAU	Level-1-260C-UNLIM	-40 to 125	2042B
TPS2042BDR	Active	Production	SOIC (D) | 8	2500 | LARGE T&R	Yes	NIPDAU	Level-1-260C-UNLIM	-40 to 125	2042B
TPS2042BDR.A	Active	Production	SOIC (D) | 8	2500 | LARGE T&R	Yes	NIPDAU	Level-1-260C-UNLIM	-40 to 125	2042B
TPS2042BDRBR	Active	Production	SON (DRB) | 8	3000 | LARGE T&R	Yes	NIPDAU	Level-1-260C-UNLIM	-40 to 125	2042
TPS2042BDRBR.A	Active	Production	SON (DRB) | 8	3000 | LARGE T&R	Yes	NIPDAU	Level-1-260C-UNLIM	-40 to 125	2042
TPS2042BDRBT	Active	Production	SON (DRB) | 8	250 | SMALL T&R	Yes	NIPDAU	Level-1-260C-UNLIM	-40 to 125	2042
TPS2042BDRBT.A	Active	Production	SON (DRB) | 8	250 | SMALL T&R	Yes	NIPDAU	Level-1-260C-UNLIM	-40 to 125	2042
TPS2042BDRBTG4	Active	Production	SON (DRB) | 8	250 | SMALL T&R	Yes	NIPDAU	Level-1-260C-UNLIM	-40 to 125	2042
TPS2042BDRBTG4.A	Active	Production	SON (DRB) | 8	250 | SMALL T&R	Yes	NIPDAU	Level-1-260C-UNLIM	-40 to 125	2042
TPS2042BDRG4	Active	Production	SOIC (D) | 8	2500 | LARGE T&R	Yes	NIPDAU	Level-1-260C-UNLIM	-40 to 125	2042B
TPS2043BD	Active	Production	SOIC (D) | 16	40 | TUBE	Yes	NIPDAU	Level-1-260C-UNLIM	-40 to 125	2043B
TPS2043BD.A	Active	Production	SOIC (D) | 16	40 | TUBE	Yes	NIPDAU	Level-1-260C-UNLIM	-40 to 125	2043B
TPS2043BDR	Active	Production	SOIC (D) | 16	2500 | LARGE T&R	Yes	NIPDAU	Level-1-260C-UNLIM	-40 to 125	2043B
TPS2043BDR.A	Active	Production	SOIC (D) | 16	2500 | LARGE T&R	Yes	NIPDAU	Level-1-260C-UNLIM	-40 to 125	2043B
TPS2043BDRG4	Active	Production	SOIC (D) | 16	2500 | LARGE T&R	Yes	NIPDAU	Level-1-260C-UNLIM	-40 to 125	2043B
TPS2044BD	Active	Production	SOIC (D) | 16	40 | TUBE	Yes	NIPDAU	Level-1-260C-UNLIM	-40 to 125	2044B
TPS2044BD.A	Active	Production	SOIC (D) | 16	40 | TUBE	Yes	NIPDAU	Level-1-260C-UNLIM	-40 to 125	2044B
TPS2044BDG4	Active	Production	SOIC (D) | 16	40 | TUBE	Yes	NIPDAU	Level-1-260C-UNLIM	-40 to 125	2044B
TPS2044BDR	Active	Production	SOIC (D) | 16	2500 | LARGE T&R	Yes	NIPDAU	Level-1-260C-UNLIM	-40 to 125	2044B

Orderable part number	Status (1)	Material type (2)	Package | Pins	Package qty | Carrier	RoHS (3)	Lead finish/ Ball material (4)	MSL rating/ Peak reflow (5)	Op temp (°C)	Part marking (6)
TPS2044BDR.A	Active	Production	SOIC (D) | 16	2500 | LARGE T&R	Yes	NIPDAU	Level-1-260C-UNLIM	-40 to 125	2044B
TPS2044BDRG4	Active	Production	SOIC (D) | 16	2500 | LARGE T&R	Yes	NIPDAU	Level-1-260C-UNLIM	-40 to 125	2044B
TPS2051BDBVR	Active	Production	SOT-23 (DBV) | 5	3000 | LARGE T&R	Yes	NIPDAU | SN	Level-1-260C-UNLIM	-40 to 125	PLJI
TPS2051BDBVR.A	Active	Production	SOT-23 (DBV) | 5	3000 | LARGE T&R	Yes	NIPDAU	Level-1-260C-UNLIM	-40 to 125	PLJI
TPS2051BDBVR1G4.A	Active	Production	SOT-23 (DBV) | 5	3000 | LARGE T&R	-	Call TI	Call TI	-40 to 125	PLJI
TPS2051BDBVT	Obsolete	Production	SOT-23 (DBV) | 5	-	-	Call TI	Call TI	-40 to 125	PLJI
TPS2051BDGNR	Active	Production	HVSSOP (DGN) | 8	2500 | LARGE T&R	Yes	NIPDAU	Level-1-260C-UNLIM	-40 to 125	2051B
TPS2051BDGNR.A	Active	Production	HVSSOP (DGN) | 8	2500 | LARGE T&R	Yes	NIPDAU	Level-1-260C-UNLIM	-40 to 125	2051B
TPS2051BDGNRG4	Active	Production	HVSSOP (DGN) | 8	2500 | LARGE T&R	Yes	NIPDAU	Level-1-260C-UNLIM	-40 to 125	2051B
TPS2051BDR	Active	Production	SOIC (D) | 8	2500 | LARGE T&R	Yes	NIPDAU	Level-1-260C-UNLIM	-40 to 125	2051B
TPS2051BDR.A	Active	Production	SOIC (D) | 8	2500 | LARGE T&R	Yes	NIPDAU	Level-1-260C-UNLIM	-40 to 125	2051B
TPS2051BDRG4	Active	Production	SOIC (D) | 8	2500 | LARGE T&R	Yes	NIPDAU	Level-1-260C-UNLIM	-40 to 125	2051B
TPS2052BDGNR	Active	Production	HVSSOP (DGN) | 8	2500 | LARGE T&R	Yes	NIPDAU	Level-1-260C-UNLIM	-40 to 125	2052B
TPS2052BDGNR.A	Active	Production	HVSSOP (DGN) | 8	2500 | LARGE T&R	Yes	NIPDAU	Level-1-260C-UNLIM	-40 to 125	2052B
TPS2052BDGNRG4	Active	Production	HVSSOP (DGN) | 8	2500 | LARGE T&R	Yes	NIPDAU	Level-1-260C-UNLIM	-40 to 125	2052B
TPS2052BDR	Active	Production	SOIC (D) | 8	2500 | LARGE T&R	Yes	NIPDAU	Level-1-260C-UNLIM	-40 to 125	2052B
TPS2052BDR.A	Active	Production	SOIC (D) | 8	2500 | LARGE T&R	Yes	NIPDAU	Level-1-260C-UNLIM	-40 to 125	2052B
TPS2052BDRBR	Active	Production	SON (DRB) | 8	3000 | LARGE T&R	Yes	NIPDAU	Level-1-260C-UNLIM	-40 to 125	2052
TPS2052BDRBR.A	Active	Production	SON (DRB) | 8	3000 | LARGE T&R	Yes	NIPDAU	Level-1-260C-UNLIM	-40 to 125	2052
TPS2052BDRBR.B	Active	Production	SON (DRB) | 8	3000 | LARGE T&R	Yes	NIPDAU	Level-1-260C-UNLIM	-40 to 125	2052
TPS2052BDRBT	Active	Production	SON (DRB) | 8	250 | SMALL T&R	Yes	NIPDAU	Level-1-260C-UNLIM	-40 to 85	2052
TPS2052BDRBT.A	Active	Production	SON (DRB) | 8	250 | SMALL T&R	Yes	NIPDAU	Level-1-260C-UNLIM	-40 to 85	2052
TPS2052BDRBT.B	Active	Production	SON (DRB) | 8	250 | SMALL T&R	Yes	NIPDAU	Level-1-260C-UNLIM	-40 to 85	2052
TPS2052BDRBTG4	Active	Production	SON (DRB) | 8	250 | SMALL T&R	Yes	NIPDAU	Level-1-260C-UNLIM	-40 to 125	2052
TPS2052BDRBTG4.A	Active	Production	SON (DRB) | 8	250 | SMALL T&R	Yes	NIPDAU	Level-1-260C-UNLIM	-40 to 125	2052
TPS2053BD	Active	Production	SOIC (D) | 16	40 | TUBE	Yes	NIPDAU	Level-1-260C-UNLIM	-40 to 125	2053B
TPS2053BD.A	Active	Production	SOIC (D) | 16	40 | TUBE	Yes	NIPDAU	Level-1-260C-UNLIM	-40 to 125	2053B
TPS2053BDR	Active	Production	SOIC (D) | 16	2500 | LARGE T&R	Yes	NIPDAU	Level-1-260C-UNLIM	-40 to 125	2053B
TPS2053BDR.A	Active	Production	SOIC (D) | 16	2500 | LARGE T&R	Yes	NIPDAU	Level-1-260C-UNLIM	-40 to 125	2053B
TPS2054BD	Active	Production	SOIC (D) | 16	40 | TUBE	Yes	NIPDAU	Level-1-260C-UNLIM	-40 to 125	2054B
TPS2054BD.A	Active	Production	SOIC (D) | 16	40 | TUBE	Yes	NIPDAU	Level-1-260C-UNLIM	-40 to 125	2054B

Orderable part number	Status (1)	Material type (2)	Package | Pins	Package qty | Carrier	RoHS (3)	Lead finish/ Ball material (4)	MSL rating/ Peak reflow (5)	Op temp (°C)	Part marking (6)
TPS2054BDR	Active	Production	SOIC (D) | 16	2500 | LARGE T&R	Yes	NIPDAU	Level-1-260C-UNLIM	-40 to 125	2054B
TPS2054BDR.A	Active	Production	SOIC (D) | 16	2500 | LARGE T&R	Yes	NIPDAU	Level-1-260C-UNLIM	-40 to 125	2054B
TPS2054BDRG4	Active	Production	SOIC (D) | 16	2500 | LARGE T&R	Yes	NIPDAU	Level-1-260C-UNLIM	-40 to 125	2054B
TPS2054BDRG4.A	Active	Production	SOIC (D) | 16	2500 | LARGE T&R	Yes	NIPDAU	Level-1-260C-UNLIM	-40 to 125	2054B

(1) **Status:** For more details on status, see our product life cycle.

(2) **Material type:** When designated, preproduction parts are prototypes/experimental devices, and are not yet approved or released for full production. Testing and final process, including without limitation quality assurance, reliability performance testing, and/or process qualification, may not yet be complete, and this item is subject to further changes or possible discontinuation. If available for ordering, purchases will be subject to an additional waiver at checkout, and are intended for early internal evaluation purposes only. These items are sold without warranties of any kind.

(3) **RoHS values:** Yes, No, RoHS Exempt. See the TI RoHS Statement for additional information and value definition.

(4) **Lead finish/Ball material:** Parts may have multiple material finish options. Finish options are separated by a vertical ruled line. Lead finish/Ball material values may wrap to two lines if the finish value exceeds the maximum column width.

(5) **MSL rating/Peak reflow:** The moisture sensitivity level ratings and peak solder (reflow) temperatures. In the event that a part has multiple moisture sensitivity ratings, only the lowest level per JEDEC standards is shown. Refer to the shipping label for the actual reflow temperature that will be used to mount the part to the printed circuit board.

(6) **Part marking:** There may be an additional marking, which relates to the logo, the lot trace code information, or the environmental category of the part.

Multiple part markings will be inside parentheses. Only one part marking contained in parentheses and separated by a "~" will appear on a part. If a line is indented then it is a continuation of the previous line and the two combined represent the entire part marking for that device.

Important Information and Disclaimer: The information provided on this page represents TI's knowledge and belief as of the date that it is provided. TI bases its knowledge and belief on information provided by third parties, and makes no representation or warranty as to the accuracy of such information. Efforts are underway to better integrate information from third parties. TI has taken and continues to take reasonable steps to provide representative and accurate information but may not have conducted destructive testing or chemical analysis on incoming materials and chemicals. TI and TI suppliers consider certain information to be proprietary, and thus CAS numbers and other limited information may not be available for release.

In no event shall TI's liability arising out of such information exceed the total purchase price of the TI part(s) at issue in this document sold by TI to Customer on an annual basis.

OTHER QUALIFIED VERSIONS OF TPS2041B, TPS2042B, TPS2051B :

- Automotive : TPS2041B-Q1, TPS2042B-Q1, TPS2051B-Q1

- Enhanced Product : TPS2041B-EP

NOTE: Qualified Version Definitions:

- Automotive - Q100 devices qualified for high-reliability automotive applications targeting zero defects
- Enhanced Product - Supports Defense, Aerospace and Medical Applications

TAPE AND REEL INFORMATION

REEL DIMENSIONS

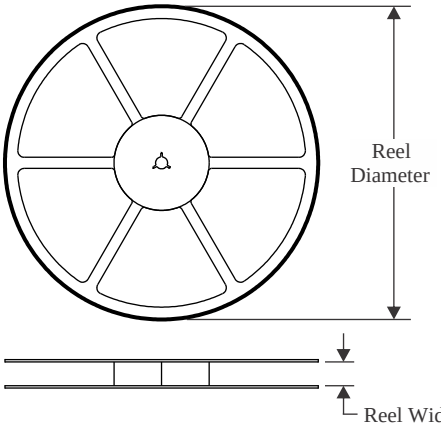

TAPE DIMENSIONS

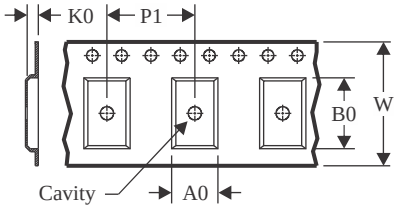

A0	Dimension designed to accommodate the component width
B0	Dimension designed to accommodate the component length
K0	Dimension designed to accommodate the component thickness
W	Overall width of the carrier tape
P1	Pitch between successive cavity centers

QUADRANT ASSIGNMENTS FOR PIN 1 ORIENTATION IN TAPE

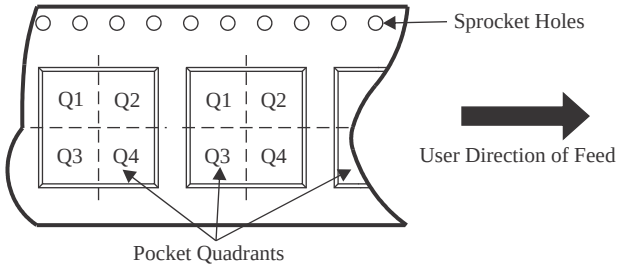

*All dimensions are nominal

Device	Package Type	Package Drawing	Pins	SPQ	Reel Diameter (mm)	Reel Width W1 (mm)	A0 (mm)	B0 (mm)	K0 (mm)	P1 (mm)	W (mm)	Pin1 Quadrant
TPS2041BDBVR	SOT-23	DBV	5	3000	180.0	8.4	3.2	3.2	1.4	4.0	8.0	Q3
TPS2041BDGNR	HVSSOP	DGN	8	2500	330.0	12.4	6.4	5.2	2.1	8.0	12.0	Q1
TPS2041BDR	SOIC	D	8	2500	330.0	12.4	6.4	5.2	2.1	8.0	12.0	Q1
TPS2042BDGNR	HVSSOP	DGN	8	2500	330.0	12.4	6.4	5.2	2.1	8.0	12.0	Q1
TPS2042BDR	SOIC	D	8	2500	330.0	12.4	6.4	5.2	2.1	8.0	12.0	Q1
TPS2042BDRBR	SON	DRB	8	3000	330.0	12.4	3.3	3.3	1.0	8.0	12.0	Q2
TPS2042BDRBT	SON	DRB	8	250	180.0	12.4	3.3	3.3	1.0	8.0	12.0	Q2
TPS2042BDRBTG4	SON	DRB	8	250	180.0	12.4	3.3	3.3	1.0	8.0	12.0	Q2
TPS2043BDR	SOIC	D	16	2500	330.0	16.4	6.5	10.3	2.1	8.0	16.0	Q1
TPS2044BDR	SOIC	D	16	2500	330.0	16.4	6.5	10.3	2.1	8.0	16.0	Q1
TPS2051BDBVR	SOT-23	DBV	5	3000	180.0	8.4	3.2	3.2	1.4	4.0	8.0	Q3
TPS2051BDGNR	HVSSOP	DGN	8	2500	330.0	12.4	6.4	5.2	2.1	8.0	12.0	Q1
TPS2051BDR	SOIC	D	8	2500	330.0	12.4	6.4	5.2	2.1	8.0	12.0	Q1
TPS2052BDGNR	HVSSOP	DGN	8	2500	330.0	12.4	6.4	5.2	2.1	8.0	12.0	Q1
TPS2052BDR	SOIC	D	8	2500	330.0	12.4	6.4	5.2	2.1	8.0	12.0	Q1
TPS2052BDRBR	SON	DRB	8	3000	330.0	12.4	3.3	3.3	1.0	8.0	12.0	Q2

Device	Package Type	Package Drawing	Pins	SPQ	Reel Diameter (mm)	Reel Width W1 (mm)	A0 (mm)	B0 (mm)	K0 (mm)	P1 (mm)	W (mm)	Pin1 Quadrant
TPS2052BDRBT	SON	DRB	8	250	180.0	12.4	3.3	3.3	1.0	8.0	12.0	Q2
TPS2052BDRBTG4	SON	DRB	8	250	180.0	12.4	3.3	3.3	1.0	8.0	12.0	Q2
TPS2053BDR	SOIC	D	16	2500	330.0	16.4	6.5	10.3	2.1	8.0	16.0	Q1
TPS2054BDR	SOIC	D	16	2500	330.0	16.4	6.5	10.3	2.1	8.0	16.0	Q1
TPS2054BDRG4	SOIC	D	16	2500	330.0	16.4	6.5	10.3	2.1	8.0	16.0	Q1

TAPE AND REEL BOX DIMENSIONS

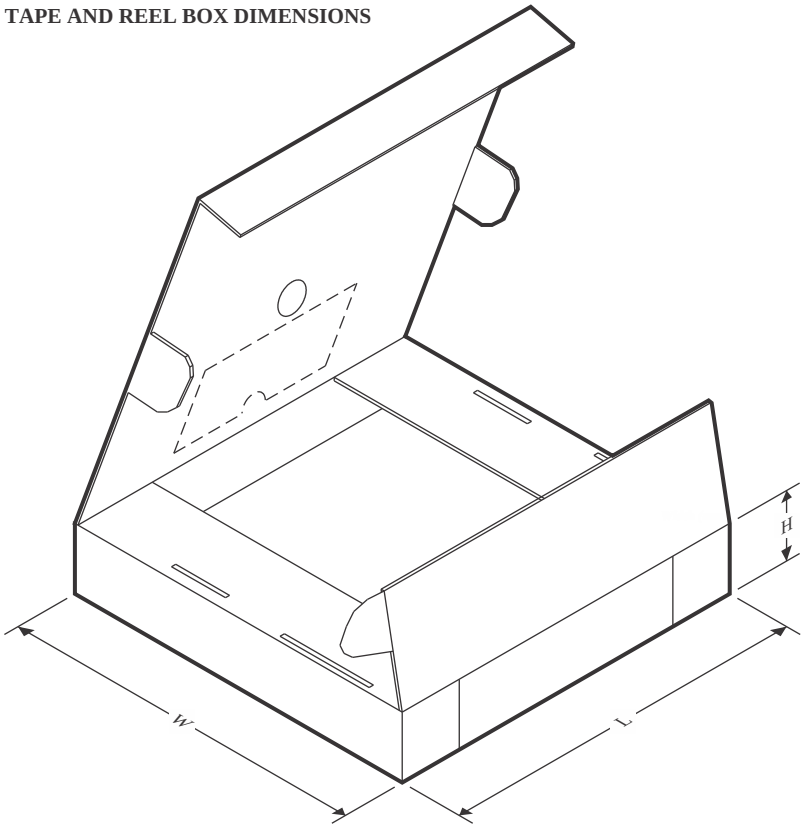

*All dimensions are nominal

Device	Package Type	Package Drawing	Pins	SPQ	Length (mm)	Width (mm)	Height (mm)
TPS2041BDBVR	SOT-23	DBV	5	3000	210.0	185.0	35.0
TPS2041BDGNR	HVSSOP	DGN	8	2500	353.0	353.0	32.0
TPS2041BDR	SOIC	D	8	2500	353.0	353.0	32.0
TPS2042BDGNR	HVSSOP	DGN	8	2500	353.0	353.0	32.0
TPS2042BDR	SOIC	D	8	2500	353.0	353.0	32.0
TPS2042BDRBR	SON	DRB	8	3000	346.0	346.0	35.0
TPS2042BDRBT	SON	DRB	8	250	200.0	183.0	25.0
TPS2042BDRBTG4	SON	DRB	8	250	200.0	183.0	25.0
TPS2043BDR	SOIC	D	16	2500	353.0	353.0	32.0
TPS2044BDR	SOIC	D	16	2500	353.0	353.0	32.0
TPS2051BDBVR	SOT-23	DBV	5	3000	210.0	185.0	35.0
TPS2051BDGNR	HVSSOP	DGN	8	2500	353.0	353.0	32.0
TPS2051BDR	SOIC	D	8	2500	353.0	353.0	32.0
TPS2052BDGNR	HVSSOP	DGN	8	2500	353.0	353.0	32.0
TPS2052BDR	SOIC	D	8	2500	353.0	353.0	32.0
TPS2052BDRBR	SON	DRB	8	3000	346.0	346.0	35.0
TPS2052BDRBT	SON	DRB	8	250	200.0	183.0	25.0
TPS2052BDRBTG4	SON	DRB	8	250	200.0	183.0	25.0

Device	Package Type	Package Drawing	Pins	SPQ	Length (mm)	Width (mm)	Height (mm)
TPS2053BDR	SOIC	D	16	2500	340.5	336.1	32.0
TPS2054BDR	SOIC	D	16	2500	353.0	353.0	32.0
TPS2054BDRG4	SOIC	D	16	2500	353.0	353.0	32.0

TUBE

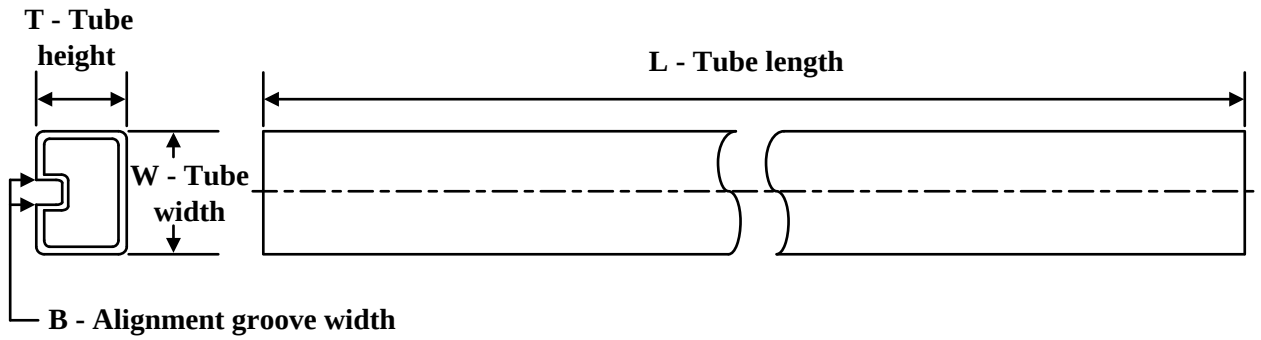

*All dimensions are nominal

Device	Package Name	Package Type	Pins	SPQ	L (mm)	W (mm)	T (µm)	B (mm)
TPS2043BD	D	SOIC	16	40	507	8	3940	4.32
TPS2043BD.A	D	SOIC	16	40	507	8	3940	4.32
TPS2044BD	D	SOIC	16	40	507	8	3940	4.32
TPS2044BD.A	D	SOIC	16	40	507	8	3940	4.32
TPS2044BDG4	D	SOIC	16	40	507	8	3940	4.32
TPS2053BD	D	SOIC	16	40	507	8	3940	4.32
TPS2053BD.A	D	SOIC	16	40	507	8	3940	4.32
TPS2054BD	D	SOIC	16	40	507	8	3940	4.32
TPS2054BD.A	D	SOIC	16	40	507	8	3940	4.32

PACKAGE OUTLINE

DBV0005A

SOT-23 - 1.45 mm max height

SMALL OUTLINE TRANSISTOR

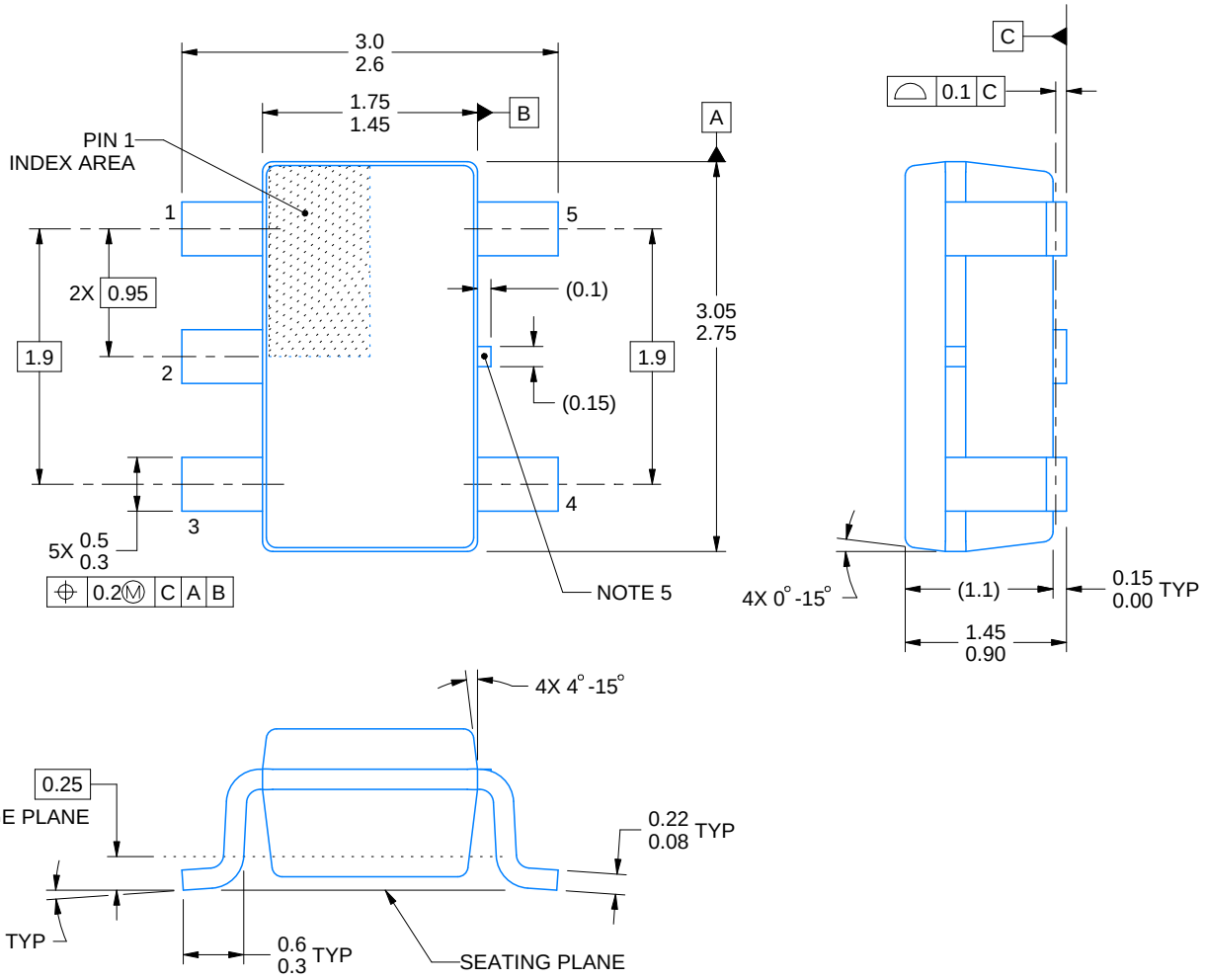

4214839/K 08/2024

NOTES:

1. All linear dimensions are in millimeters. Any dimensions in parenthesis are for reference only. Dimensioning and tolerancing per ASME Y14.5M.
2. This drawing is subject to change without notice.
3. Refernce JEDEC MO-178.
4. Body dimensions do not include mold flash, protrusions, or gate burrs. Mold flash, protrusions, or gate burrs shall not exceed 0.25 mm per side.
5. Support pin may differ or may not be present.

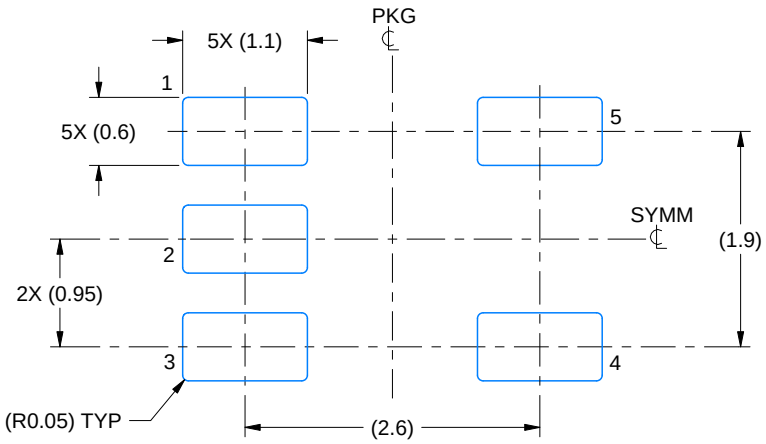

LAND PATTERN EXAMPLE
EXPOSED METAL SHOWN
SCALE:15X

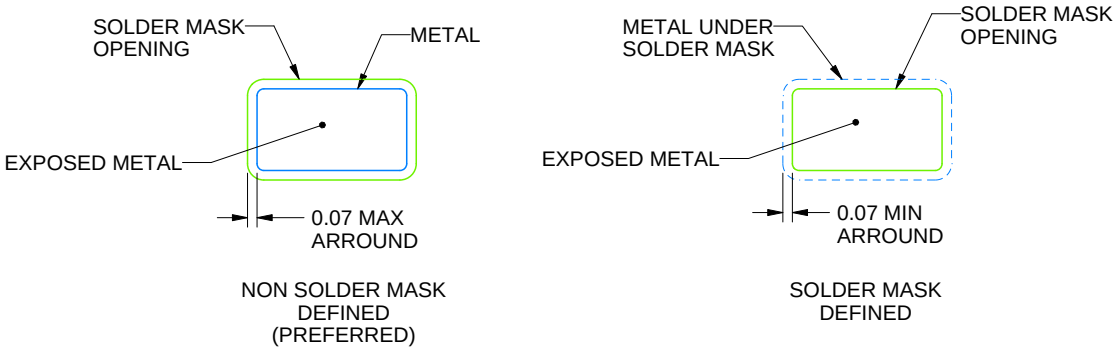

SOLDER MASK DETAILS

4214839/K 08/2024

NOTES: (continued)

6. Publication IPC-7351 may have alternate designs.
7. Solder mask tolerances between and around signal pads can vary based on board fabrication site.

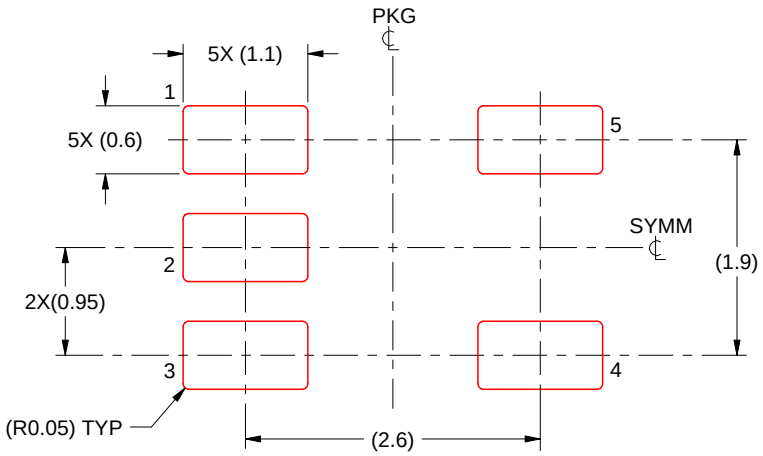

SOLDER PASTE EXAMPLE
BASED ON 0.125 mm THICK STENCIL
SCALE:15X

4214839/K 08/2024

NOTES: (continued)

8. Laser cutting apertures with trapezoidal walls and rounded corners may offer better paste release. IPC-7525 may have alternate design recommendations.
9. Board assembly site may have different recommendations for stencil design.

GENERIC PACKAGE VIEW

DRB 8

VSON - 1 mm max height

PLASTIC SMALL OUTLINE - NO LEAD



Images above are just a representation of the package family, actual package may vary.
Refer to the product data sheet for package details.

4203482/L

DRB0008B

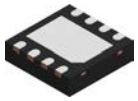

PACKAGE OUTLINE

VSON - 1 mm max height

PLASTIC SMALL OUTLINE - NO LEAD

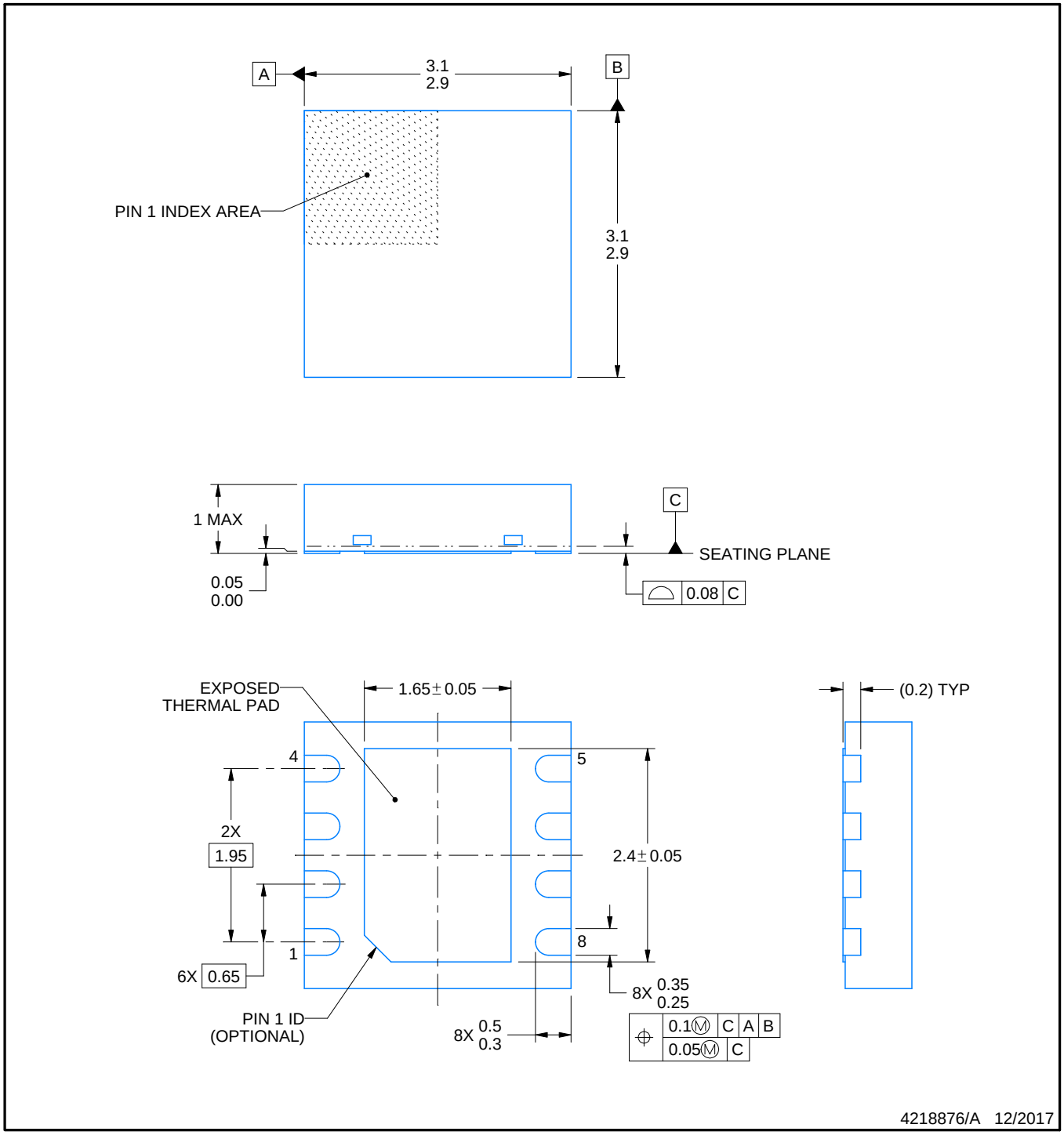

NOTES:

1. All linear dimensions are in millimeters. Any dimensions in parenthesis are for reference only. Dimensioning and tolerancing per ASME Y14.5M.
2. This drawing is subject to change without notice.
3. The package thermal pad must be soldered to the printed circuit board for thermal and mechanical performance.

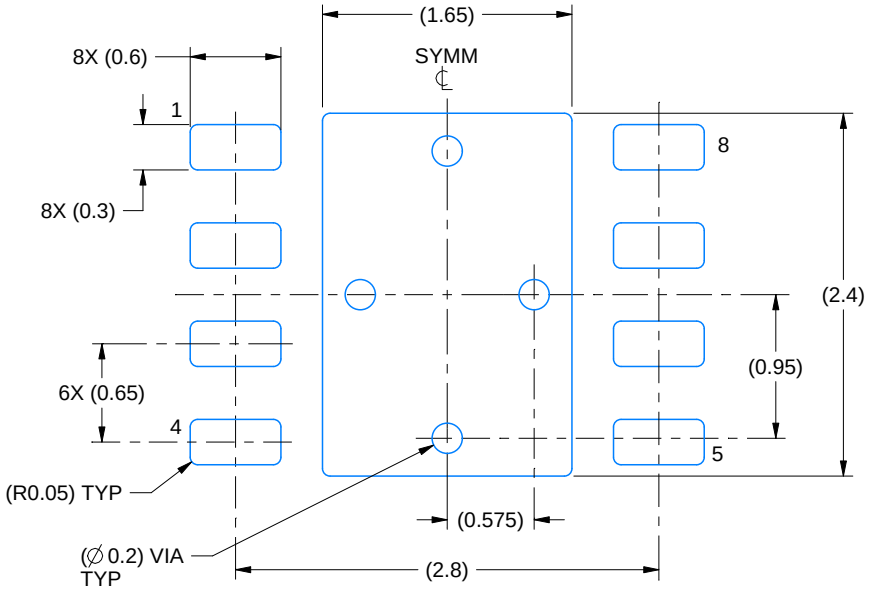

LAND PATTERN EXAMPLE
SCALE:20X

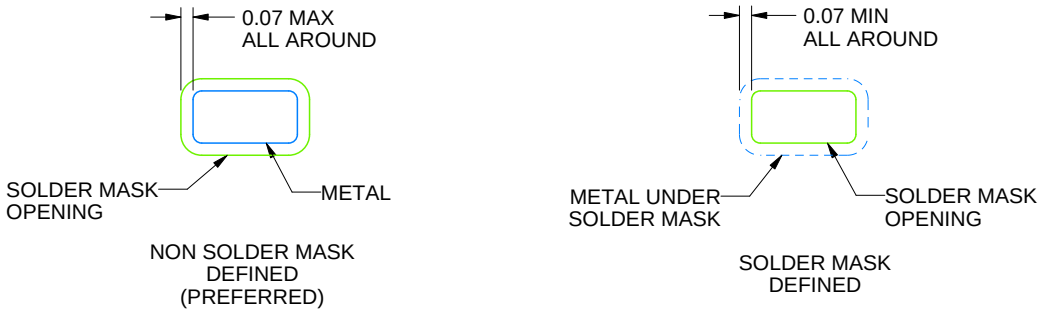

SOLDER MASK DETAILS

4218876/A 12/2017

NOTES: (continued)

4. This package is designed to be soldered to a thermal pad on the board. For more information, see Texas Instruments literature number SLUA271 (www.ti.com/lit/slua271).
5. Vias are optional depending on application, refer to device data sheet. If any vias are implemented, refer to their locations shown on this view. It is recommended that vias under paste be filled, plugged or tented.

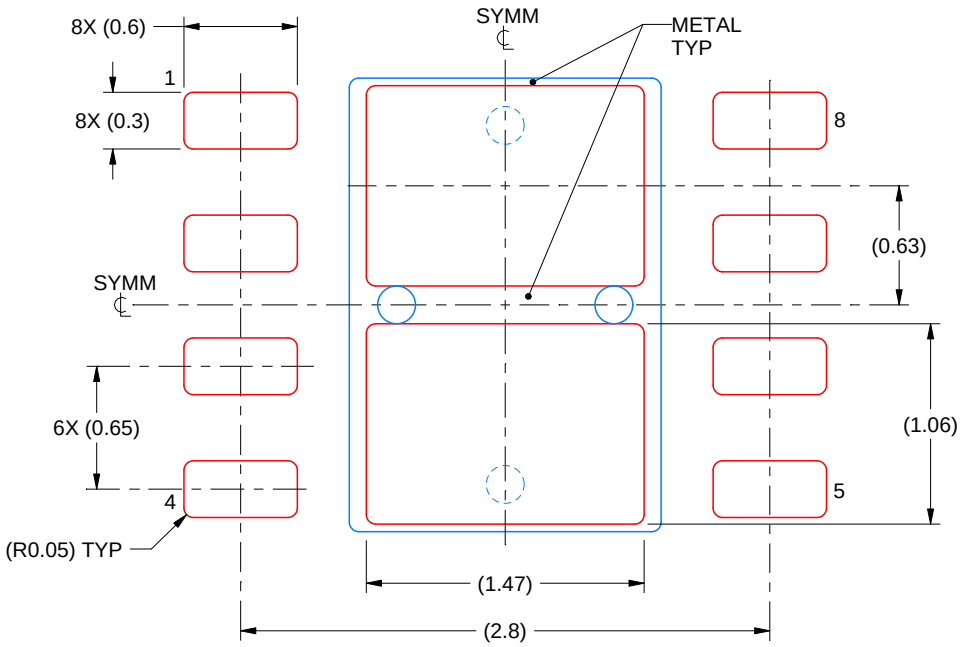

SOLDER PASTE EXAMPLE
BASED ON 0.125 mm THICK STENCIL

EXPOSED PAD
81% PRINTED SOLDER COVERAGE BY AREA
SCALE:25X

4218876/A 12/2017

NOTES: (continued)

6. Laser cutting apertures with trapezoidal walls and rounded corners may offer better paste release. IPC-7525 may have alternate design recommendations.

D (R–PDSO–G16) PLASTIC SMALL OUTLINE

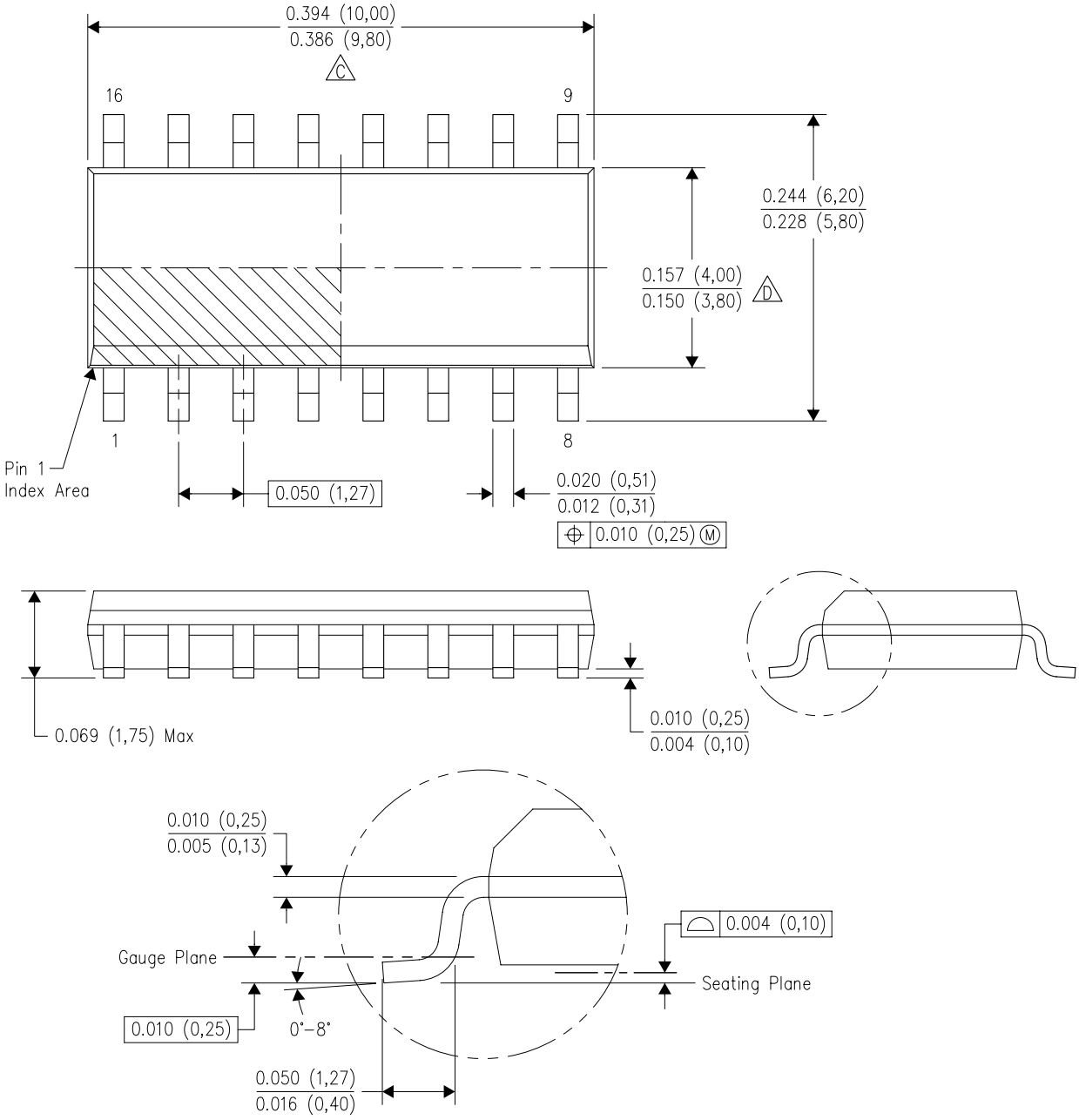

NOTES:
A. All linear dimensions are in inches (millimeters).
B. This drawing is subject to change without notice.
C. Body length does not include mold flash, protrusions, or gate burrs. Mold flash, protrusions, or gate burrs shall not exceed 0.006 (0,15) each side.
D. Body width does not include interlead flash. Interlead flash shall not exceed 0.017 (0,43) each side.
E. Reference JEDEC MS–012 variation AC.

GENERIC PACKAGE VIEW

DGN 8

PowerPAD™ HVSSOP - 1.1 mm max height

3 x 3, 0.65 mm pitch

SMALL OUTLINE PACKAGE

This image is a representation of the package family, actual package may vary.
Refer to the product data sheet for package details.

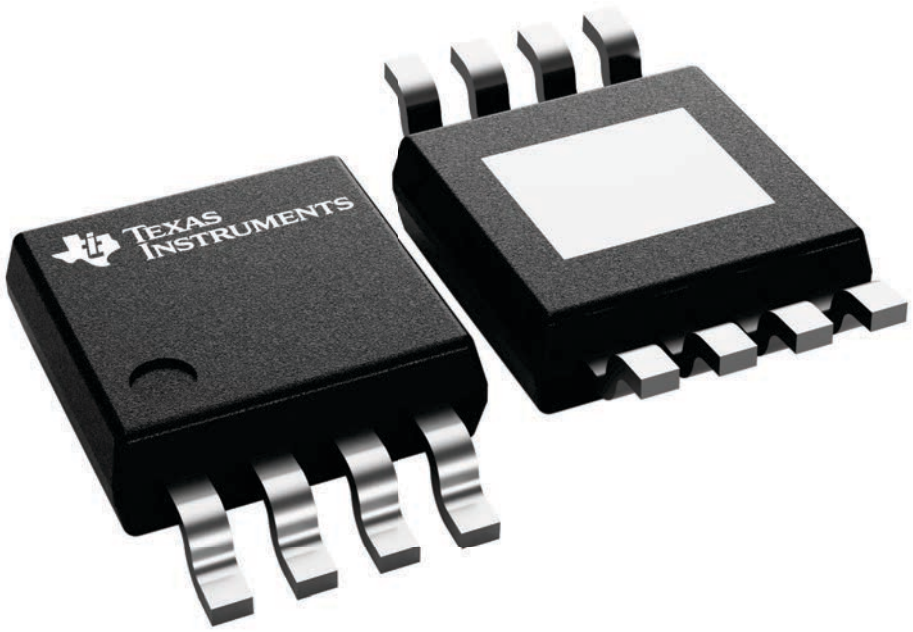

4225482/B

PACKAGE OUTLINE

DGN0008C

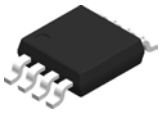

HVSSOP - 1.1 mm max height

SMALL OUTLINE PACKAGE

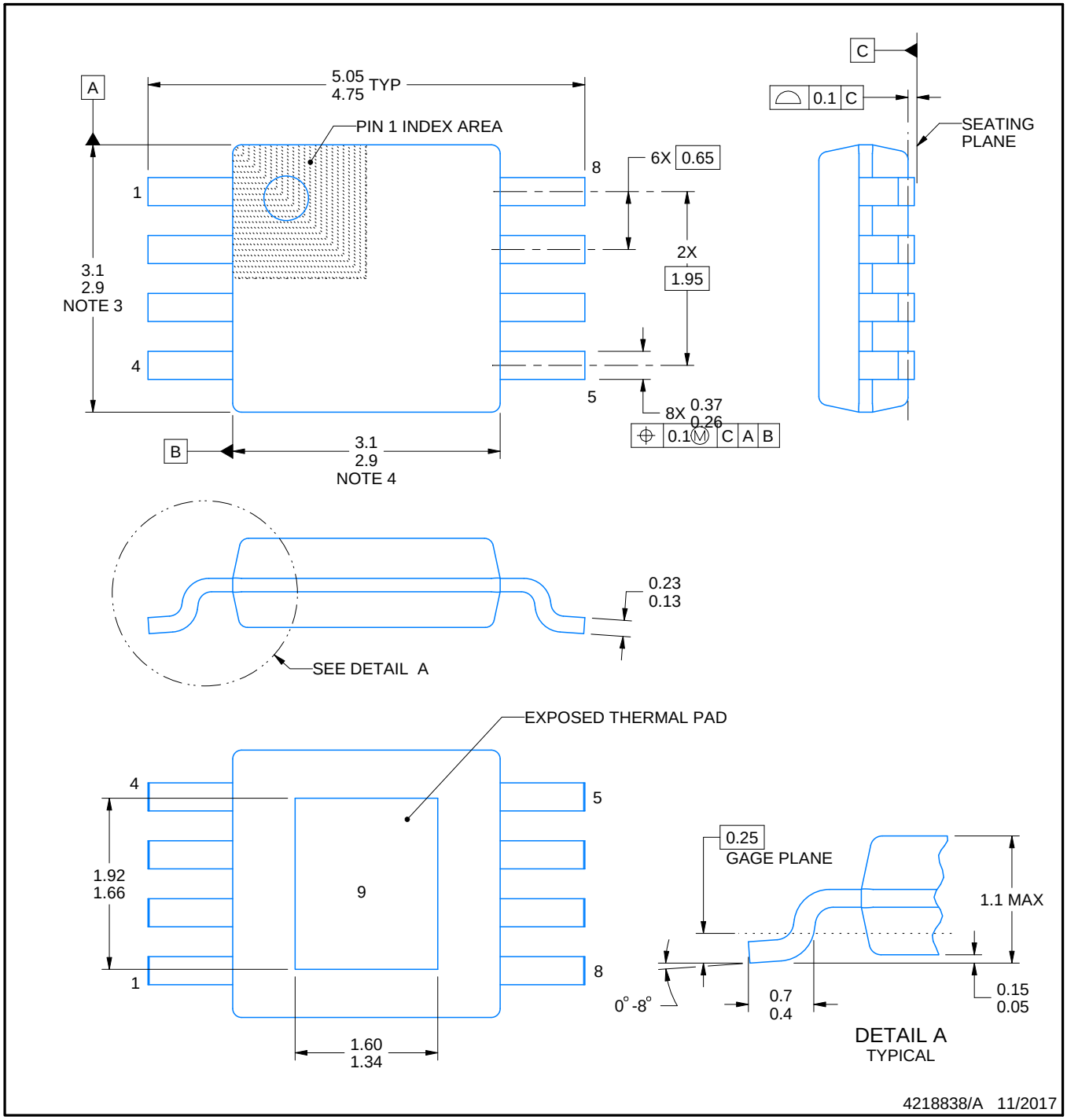

NOTES:

1. All linear dimensions are in millimeters. Any dimensions in parenthesis are for reference only. Dimensioning and tolerancing per ASME Y14.5M.
2. This drawing is subject to change without notice.
3. This dimension does not include mold flash, protrusions, or gate burrs. Mold flash, protrusions, or gate burrs shall not exceed 0.15 mm per side.
4. This dimension does not include interlead flash. Interlead flash shall not exceed 0.25 mm per side.
5. Reference JEDEC registration MO-187.

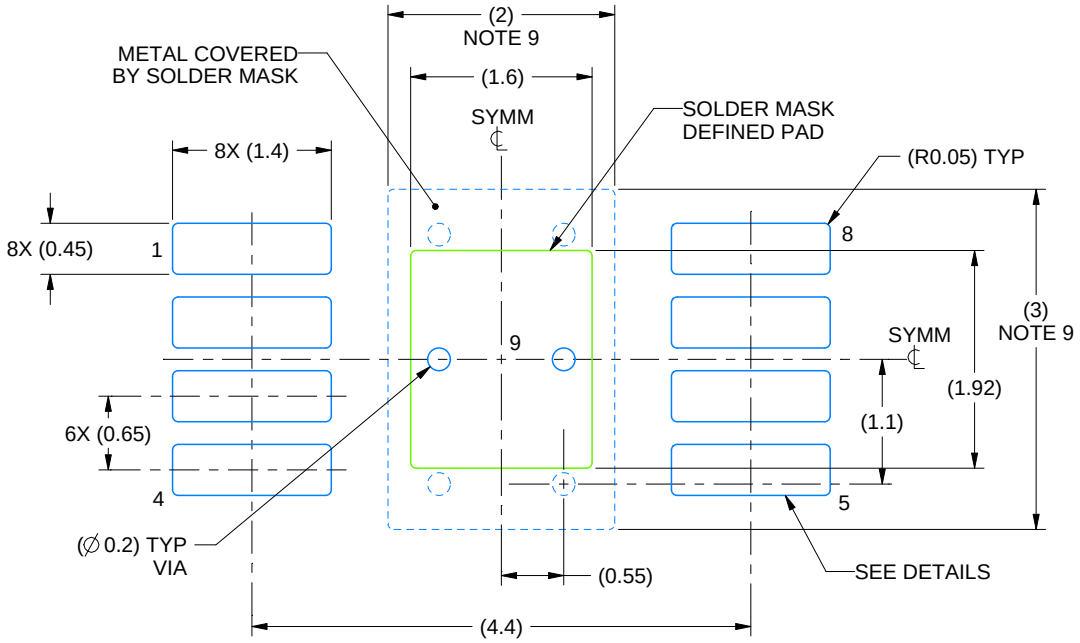

LAND PATTERN EXAMPLE
EXPOSED METAL SHOWN
SCALE: 15X

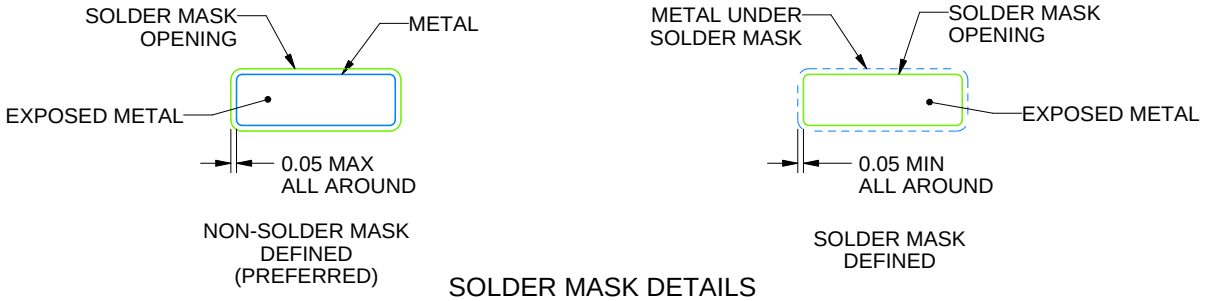

SOLDER MASK DETAILS

4218838/A 11/2017

NOTES: (continued)

6. Publication IPC-7351 may have alternate designs.
7. Solder mask tolerances between and around signal pads can vary based on board fabrication site.
8. Vias are optional depending on application, refer to device data sheet. If any vias are implemented, refer to their locations shown on this view. It is recommended that vias under paste be filled, plugged or tented.
9. Size of metal pad may vary due to creepage requirement.

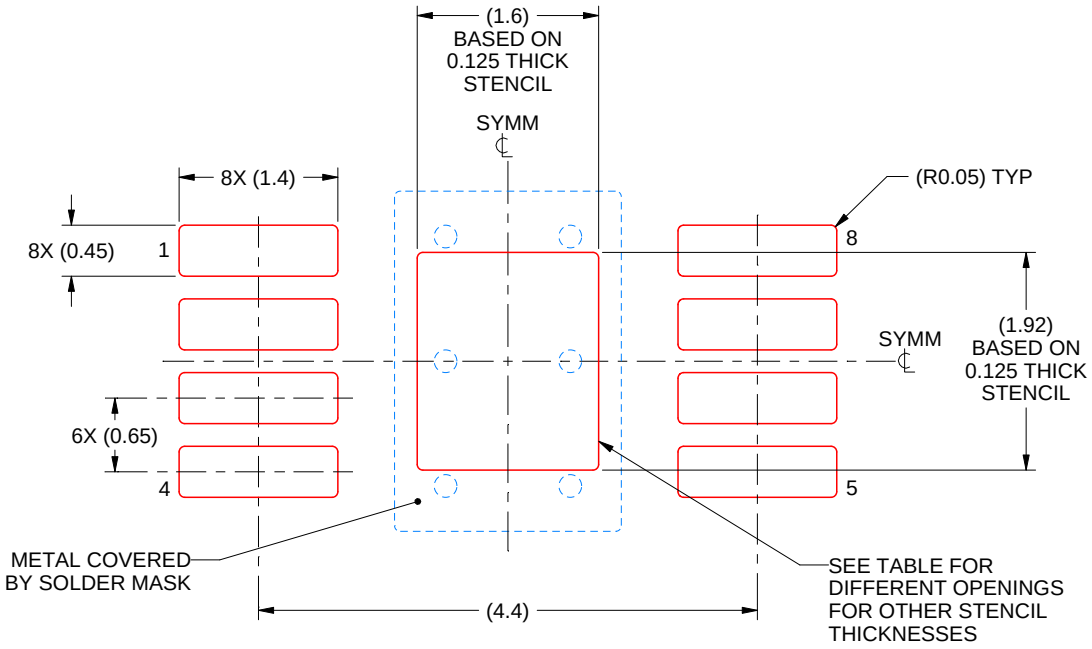

SOLDER PASTE EXAMPLE
EXPOSED PAD 9:
100% PRINTED SOLDER COVERAGE BY AREA
SCALE: 15X

STENCIL THICKNESS	SOLDER STENCIL OPENING
0.1	1.79 X 2.15
0.125	1.60 X 1.92 (SHOWN)
0.15	1.46 X 1.75
0.175	1.35 X 1.62

4218838/A 11/2017

NOTES: (continued)

10. Laser cutting apertures with trapezoidal walls and rounded corners may offer better paste release. IPC-7525 may have alternate design recommendations.
11. Board assembly site may have different recommendations for stencil design.

PACKAGE OUTLINE

DGN0008G

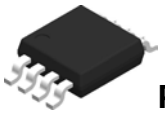

PowerPAD™ HVSSOP - 1.1 mm max height

SMALL OUTLINE PACKAGE

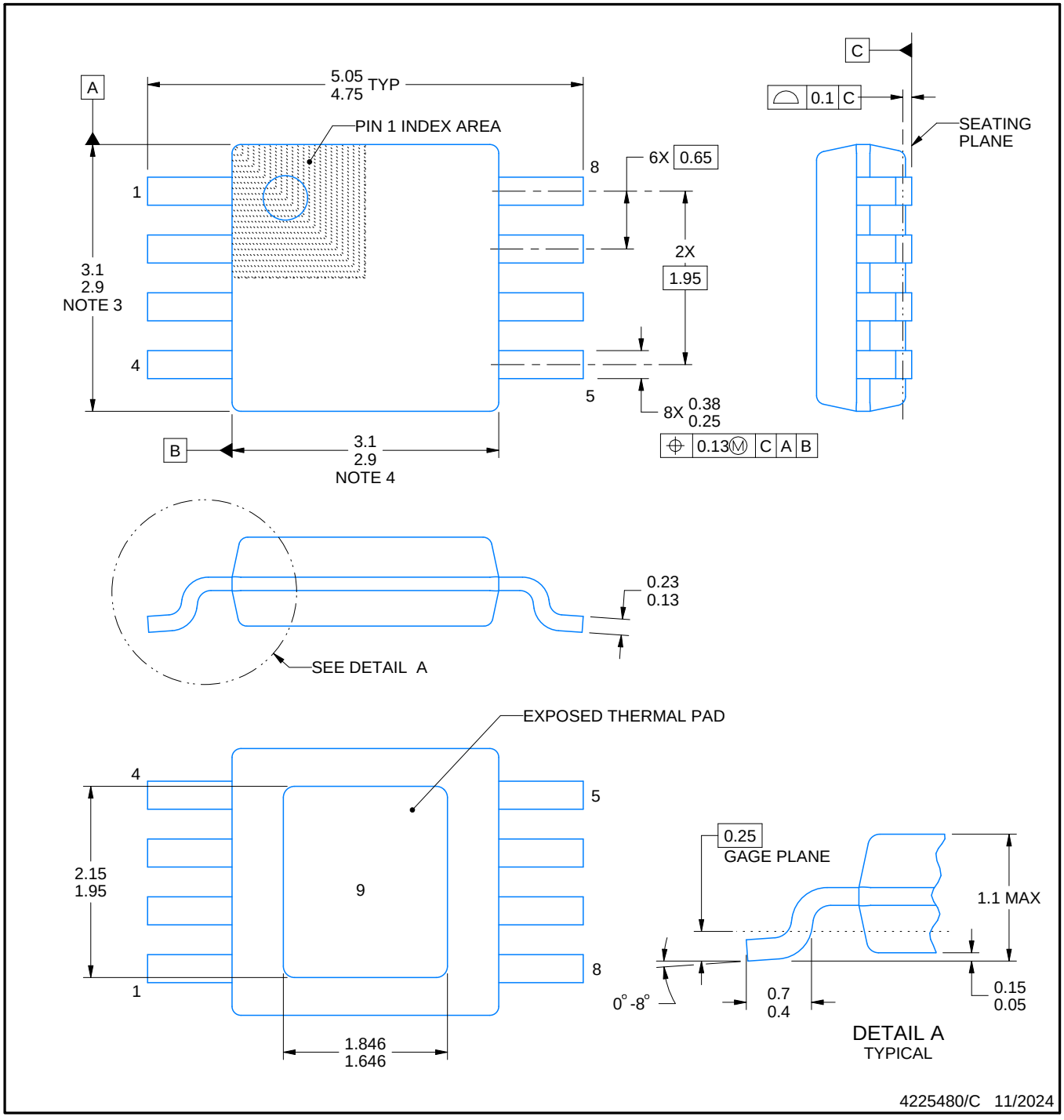

PowerPAD is a trademark of Texas Instruments.

NOTES:

1. All linear dimensions are in millimeters. Any dimensions in parenthesis are for reference only. Dimensioning and tolerancing per ASME Y14.5M.
2. This drawing is subject to change without notice.
3. This dimension does not include mold flash, protrusions, or gate burrs. Mold flash, protrusions, or gate burrs shall not exceed 0.15 mm per side.
4. This dimension does not include interlead flash. Interlead flash shall not exceed 0.25 mm per side.
5. Reference JEDEC registration MO-187.

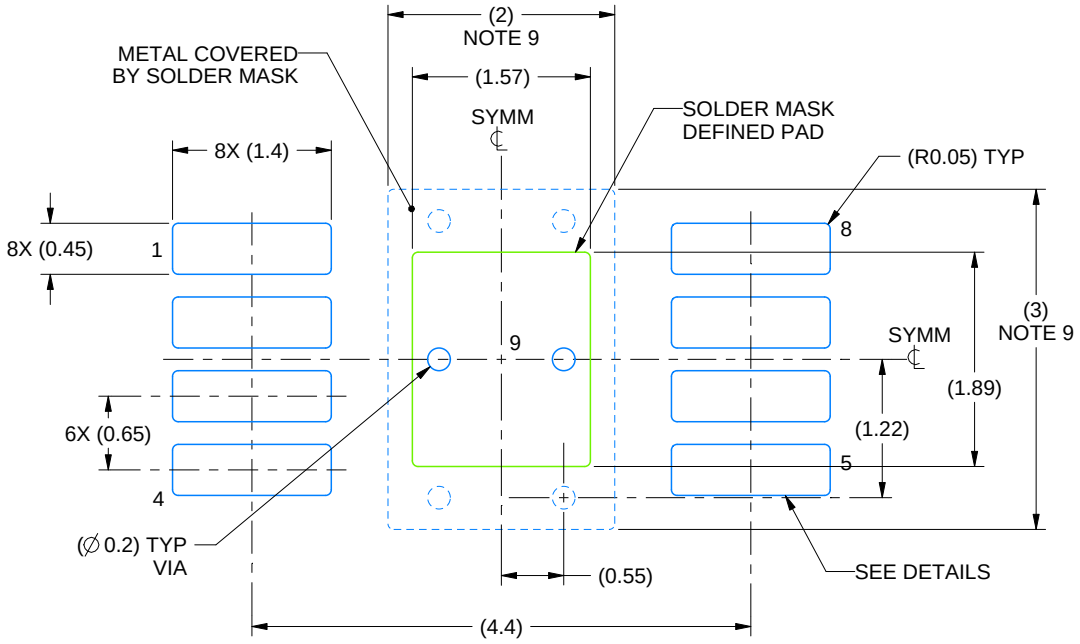

LAND PATTERN EXAMPLE
EXPOSED METAL SHOWN
SCALE: 15X

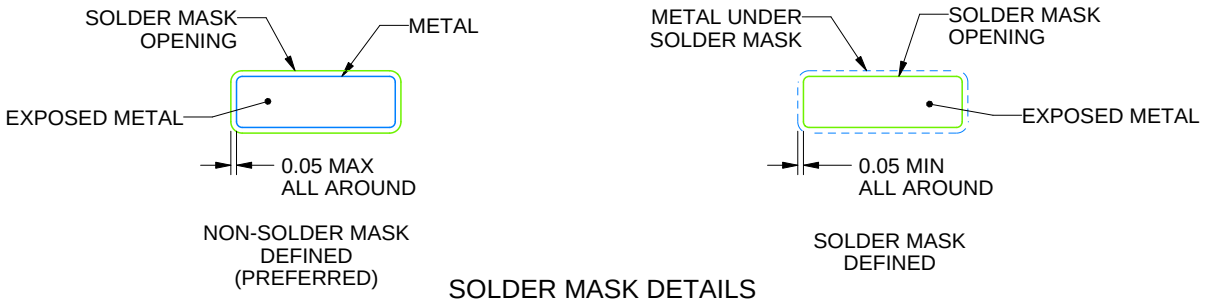

SOLDER MASK DETAILS

4225480/C 11/2024

NOTES: (continued)

6. Publication IPC-7351 may have alternate designs.
7. Solder mask tolerances between and around signal pads can vary based on board fabrication site.
8. Vias are optional depending on application, refer to device data sheet. If any vias are implemented, refer to their locations shown on this view. It is recommended that vias under paste be filled, plugged or tented.
9. Size of metal pad may vary due to creepage requirement.

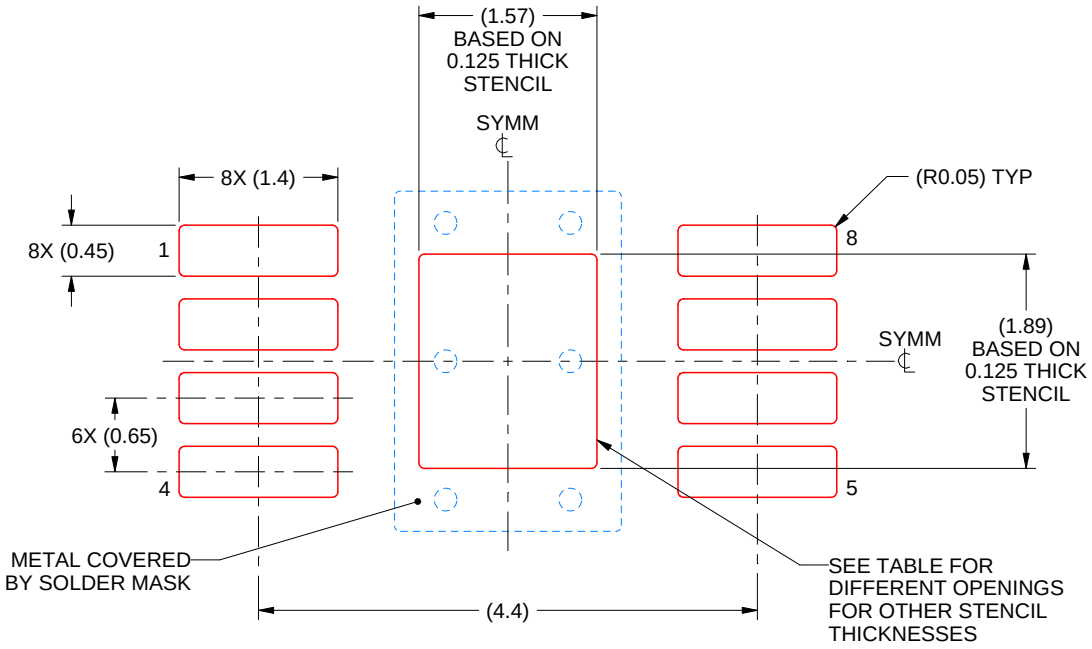

SOLDER PASTE EXAMPLE
EXPOSED PAD 9:
100% PRINTED SOLDER COVERAGE BY AREA
SCALE: 15X

STENCIL THICKNESS	SOLDER STENCIL OPENING
0.1	1.76 X 2.11
0.125	1.57 X 1.89 (SHOWN)
0.15	1.43 X 1.73
0.175	1.33 X 1.60

4225480/C 11/2024

NOTES: (continued)

10. Laser cutting apertures with trapezoidal walls and rounded corners may offer better paste release. IPC-7525 may have alternate design recommendations.
11. Board assembly site may have different recommendations for stencil design.

PACKAGE OUTLINE

DGN0008K

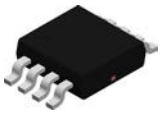

PowerPAD™ VSSOP - 1.1 mm max height

SMALL OUTLINE PACKAGE

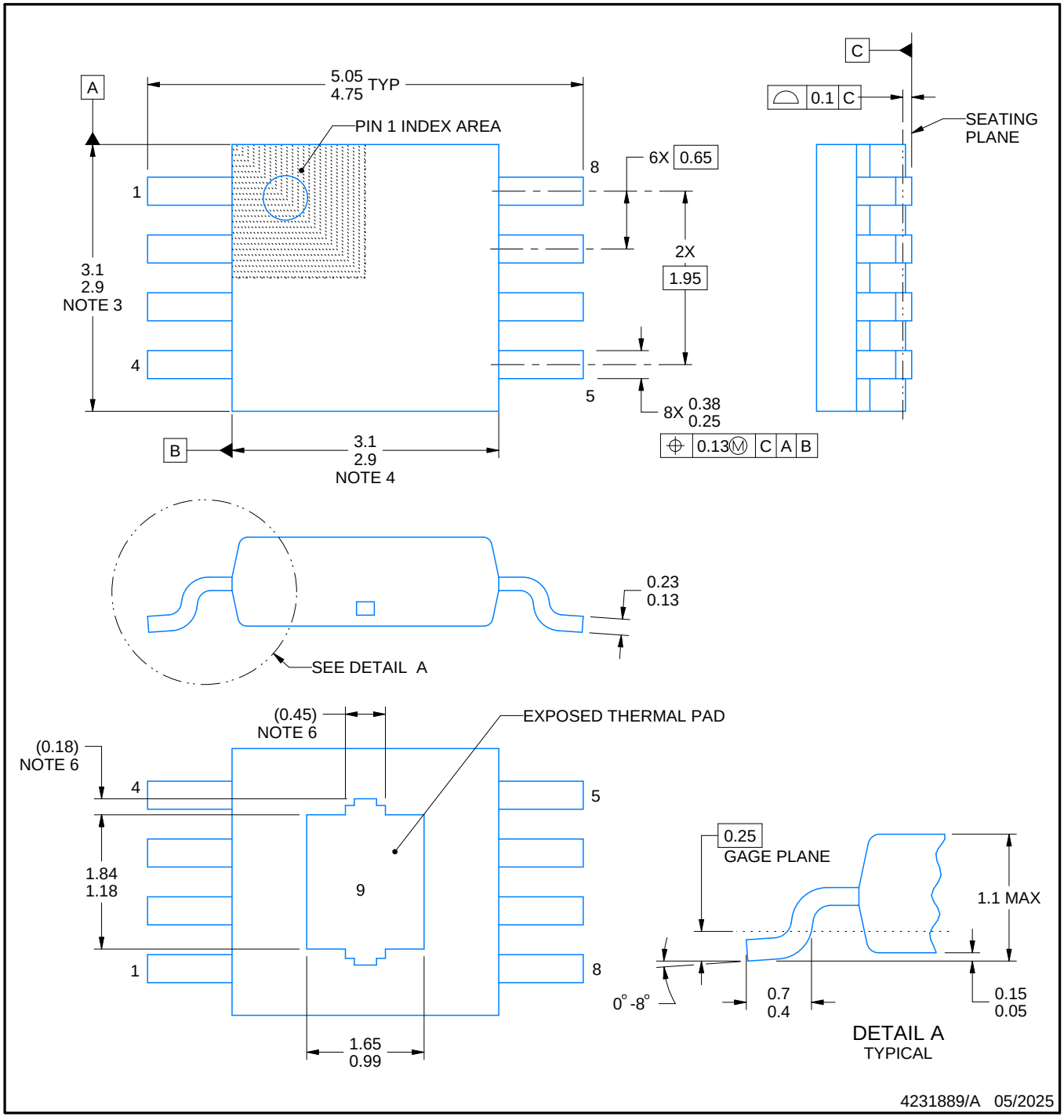

PowerPAD is a trademark of Texas Instruments.

NOTES:

1. All linear dimensions are in millimeters. Any dimensions in parenthesis are for reference only. Dimensioning and tolerancing per ASME Y14.5M.
2. This drawing is subject to change without notice.
3. This dimension does not include mold flash, protrusions, or gate burrs. Mold flash, protrusions, or gate burrs shall not exceed 0.15 mm per side.
4. This dimension does not include interlead flash. Interlead flash shall not exceed 0.25 mm per side.
5. Reference JEDEC registration MO-187.
6. Features may differ or may not be present.

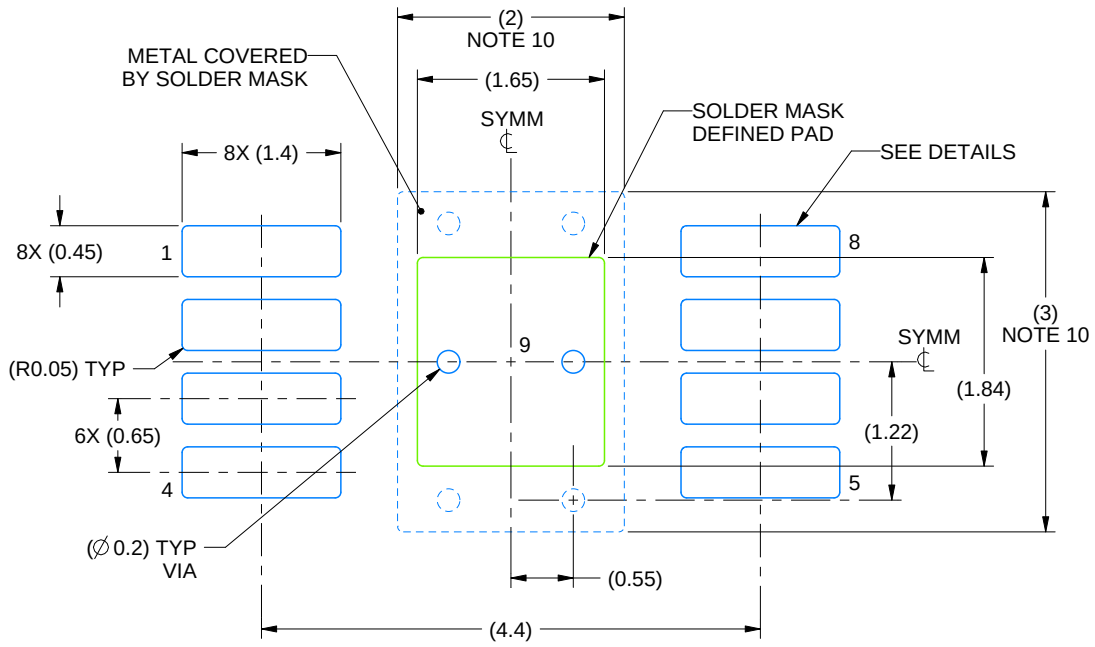

LAND PATTERN EXAMPLE
EXPOSED METAL SHOWN
SCALE: 15X

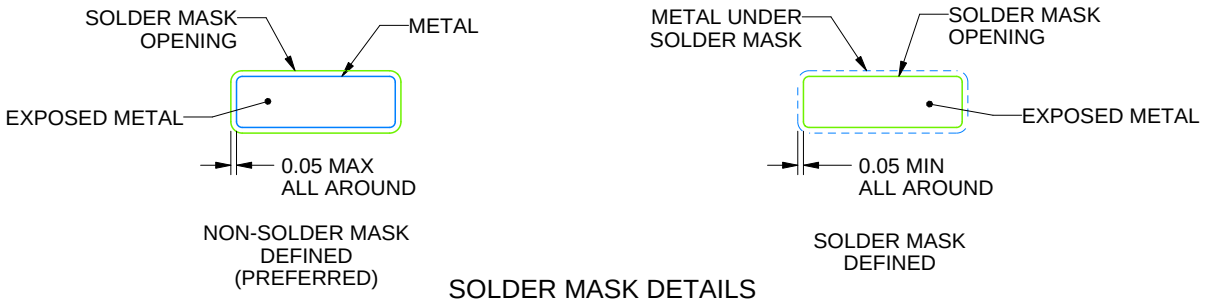

SOLDER MASK DETAILS

4231889/A 05/2025

NOTES: (continued)

7. Publication IPC-7351 may have alternate designs.
8. Solder mask tolerances between and around signal pads can vary based on board fabrication site.
9. Vias are optional depending on application, refer to device data sheet. If any vias are implemented, refer to their locations shown on this view. It is recommended that vias under paste be filled, plugged or tented.
10. Size of metal pad may vary due to creepage requirement.

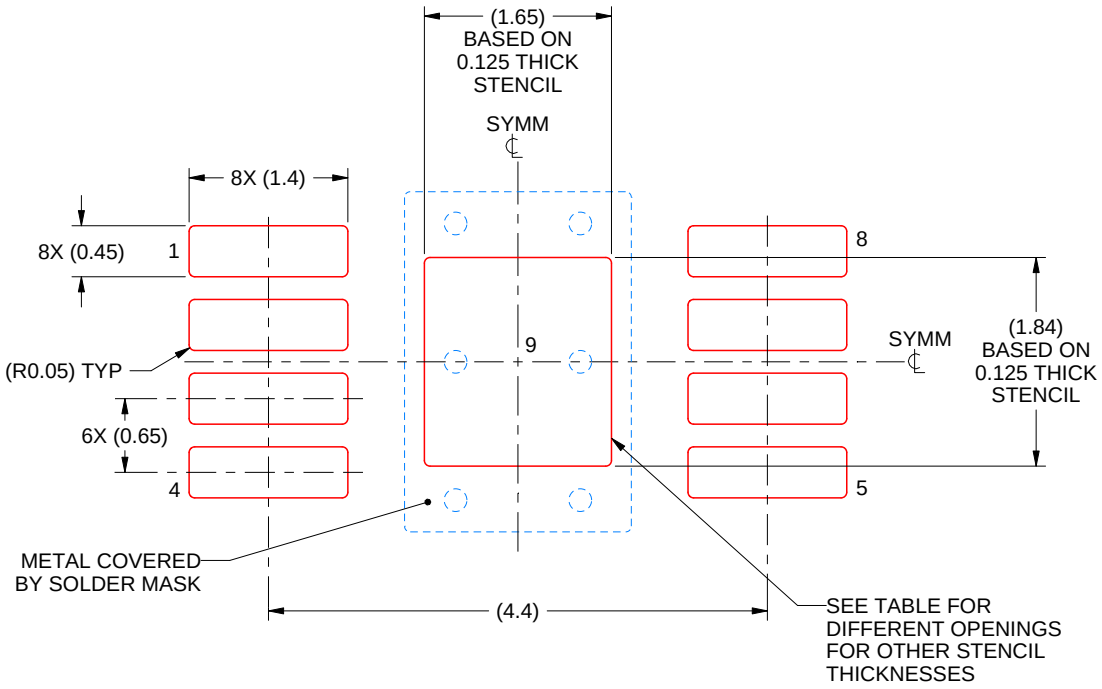

SOLDER PASTE EXAMPLE
EXPOSED PAD 9:
100% PRINTED SOLDER COVERAGE BY AREA
SCALE: 15X

STENCIL THICKNESS	SOLDER STENCIL OPENING
0.1	1.84 X 2.06
0.125	1.65 X 1.84 (SHOWN)
0.15	1.51 X 1.68
0.175	1.39 X 1.56

4231889/A 05/2025

NOTES: (continued)

11. Laser cutting apertures with trapezoidal walls and rounded corners may offer better paste release. IPC-7525 may have alternate design recommendations.
12. Board assembly site may have different recommendations for stencil design.

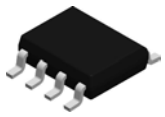

PACKAGE OUTLINE

D0008A

SOIC - 1.75 mm max height

SMALL OUTLINE INTEGRATED CIRCUIT

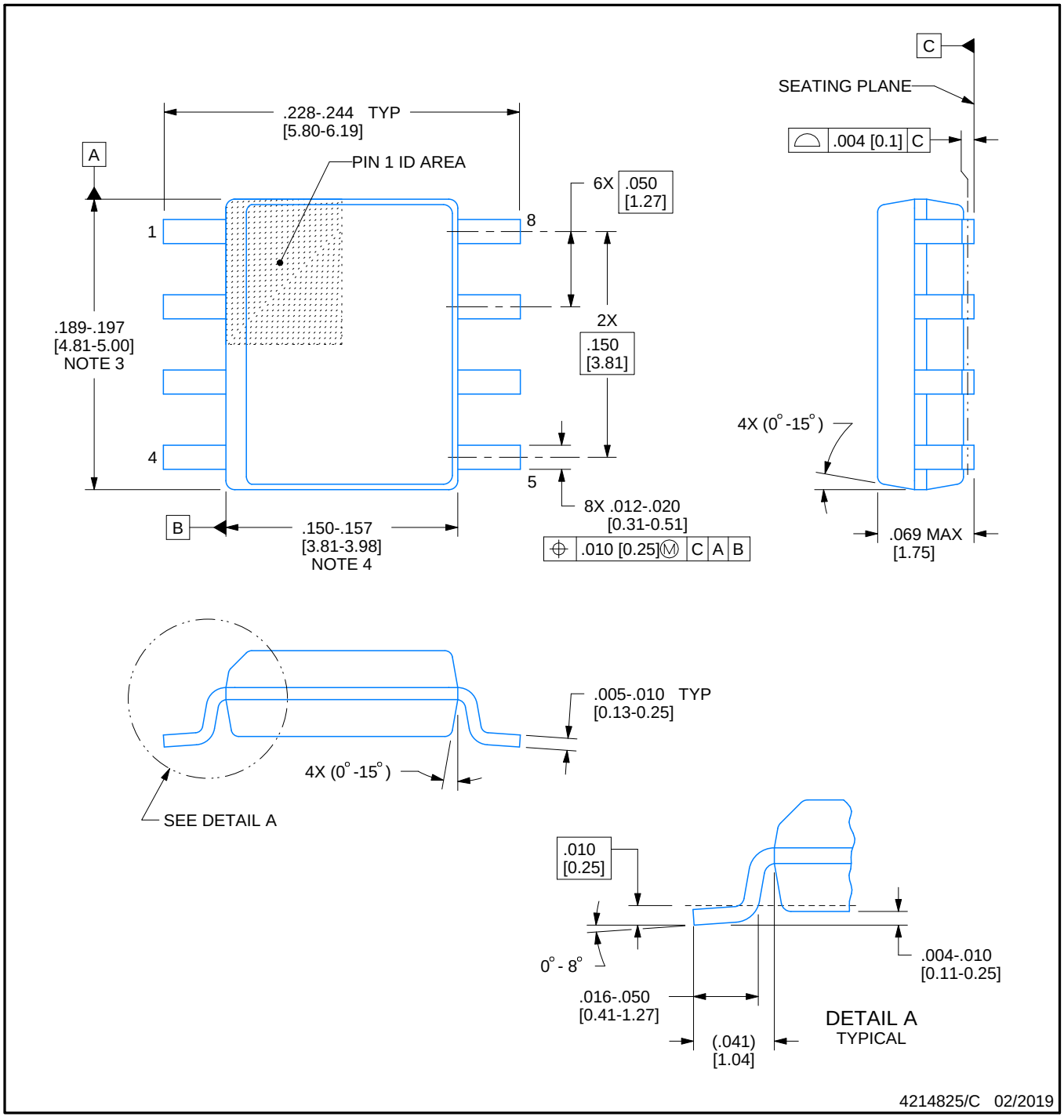

NOTES:

1. Linear dimensions are in inches [millimeters]. Dimensions in parenthesis are for reference only. Controlling dimensions are in inches. Dimensioning and tolerancing per ASME Y14.5M.
2. This drawing is subject to change without notice.
3. This dimension does not include mold flash, protrusions, or gate burrs. Mold flash, protrusions, or gate burrs shall not exceed .006 [0.15] per side.
4. This dimension does not include interlead flash.
5. Reference JEDEC registration MS-012, variation AA.

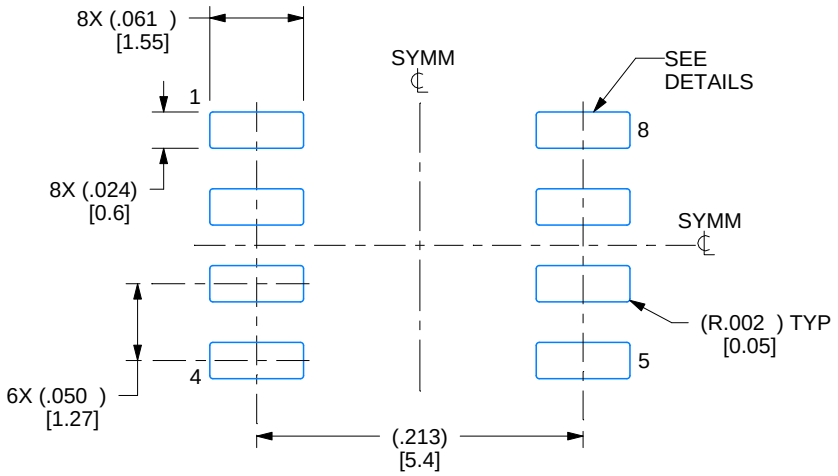

LAND PATTERN EXAMPLE
EXPOSED METAL SHOWN
SCALE:8X

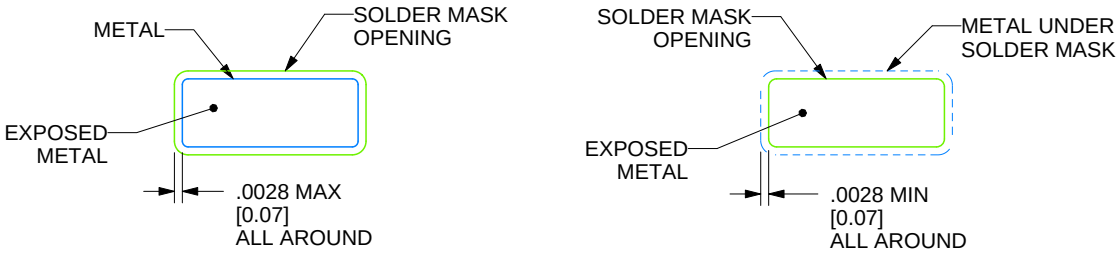

SOLDER MASK DETAILS

4214825/C 02/2019

NOTES: (continued)

6. Publication IPC-7351 may have alternate designs.
7. Solder mask tolerances between and around signal pads can vary based on board fabrication site.

EXAMPLE STENCIL DESIGN

D0008A

SOIC - 1.75 mm max height

SMALL OUTLINE INTEGRATED CIRCUIT

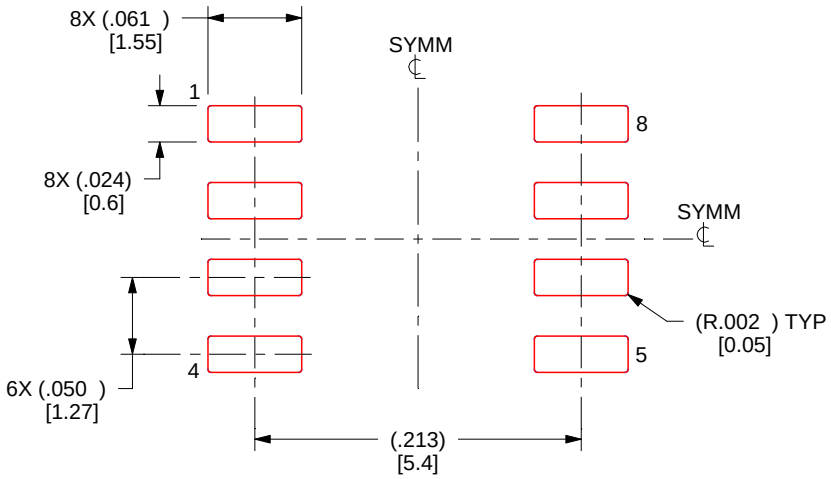

SOLDER PASTE EXAMPLE
BASED ON .005 INCH [0.125 MM] THICK STENCIL
SCALE:8X

4214825/C 02/2019

NOTES: (continued)

8. Laser cutting apertures with trapezoidal walls and rounded corners may offer better paste release. IPC-7525 may have alternate design recommendations.
9. Board assembly site may have different recommendations for stencil design.

IMPORTANT NOTICE AND DISCLAIMER

TI PROVIDES TECHNICAL AND RELIABILITY DATA (INCLUDING DATASHEETS), DESIGN RESOURCES (INCLUDING REFERENCE DESIGNS), APPLICATION OR OTHER DESIGN ADVICE, WEB TOOLS, SAFETY INFORMATION, AND OTHER RESOURCES “AS IS” AND WITH ALL FAULTS, AND DISCLAIMS ALL WARRANTIES, EXPRESS AND IMPLIED, INCLUDING WITHOUT LIMITATION ANY IMPLIED WARRANTIES OF MERCHANTABILITY, FITNESS FOR A PARTICULAR PURPOSE OR NON-INFRINGEMENT OF THIRD PARTY INTELLECTUAL PROPERTY RIGHTS.

These resources are intended for skilled developers designing with TI products. You are solely responsible for (1) selecting the appropriate TI products for your application, (2) designing, validating and testing your application, and (3) ensuring your application meets applicable standards, and any other safety, security, regulatory or other requirements.

These resources are subject to change without notice. TI grants you permission to use these resources only for development of an application that uses the TI products described in the resource. Other reproduction and display of these resources is prohibited. No license is granted to any other TI intellectual property right or to any third party intellectual property right. TI disclaims responsibility for, and you fully indemnify TI and its representatives against any claims, damages, costs, losses, and liabilities arising out of your use of these resources.

TI’s products are provided subject to TI’s Terms of Sale, TI’s General Quality Guidelines, or other applicable terms available either on ti.com or provided in conjunction with such TI products. TI’s provision of these resources does not expand or otherwise alter TI’s applicable warranties or warranty disclaimers for TI products. Unless TI explicitly designates a product as custom or customer-specified, TI products are standard, catalog, general purpose devices.

TI objects to and rejects any additional or different terms you may propose.

Copyright © 2026, Texas Instruments Incorporated

Last updated 10/2025