TPS54610 3-V to 6-V Input, 6-A Output Synchronous Buck PWM Switcher with Integrated FETs

1 Features

- 30-mΩ, 12-A Peak MOSFET Switches for High Efficiency at 6-A Continuous Output Source or Sink Current
- Adjustable Output Voltage Down to 0.9 V With 1.0% Accuracy
- Wide PWM Frequency: Fixed 350 kHz, 550 kHz or Adjustable 280 kHz to 700 kHz
- Synchronizable to 700 kHz
- Load Protected by Peak Current Limit and Thermal Shutdown
- Integrated Solution Reduces Board Area and Component Count
- SWIFT Documentation, Application Notes, and Design Software: www.ti.com/swift

2 Applications

- Low-Voltage, High-Density Distributed Power Systems
- Point of Load Regulation for High Performance DSPs, FPGAs, ASICs and Microprocessors
- Broadband, Networking and Optical Communications Infrastructure
- Portable Computing/Notebook PCs

Simplified Schematic

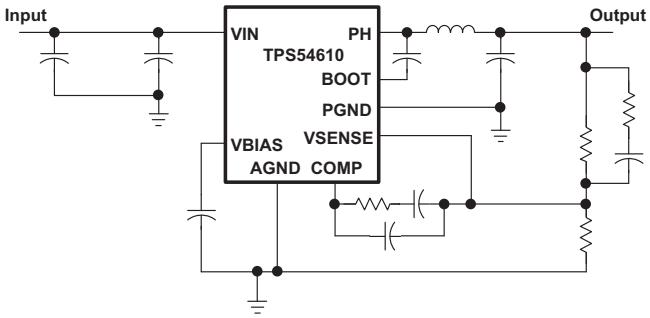

3 Description

The TPS54610 low-input voltage high-output current synchronous buck PWM converter integrates all required active components. Included on the substrate with the listed features are a true, high performance, voltage error amplifier that enables maximum performance and flexibility in choosing the output filter L and C components; an undervoltage-lockout circuit to prevent start-up until the input voltage reaches 3 V; an internally or externally set slow-start circuit to limit inrush currents; and a power good output useful for processor/logic reset, fault signaling, and supply sequencing.

The TPS54610 is available in a thermally enhanced 28-pin HTSSOP (PWP) PowerPAD™ package, which eliminates bulky heatsinks. TI provides evaluation modules to aid in quickly achieving high-performance power supply designs to meet aggressive equipment development cycles.

Device Information(1)

DEVICE NAME	PACKAGE	BODY SIZE (NOM)
TPS54610	HTSSOP (28)	9.70 mm x 6.40 mm

(1) For all available packages, see the orderable addendum at the end of the data sheet.

Efficiency at 350 kHz

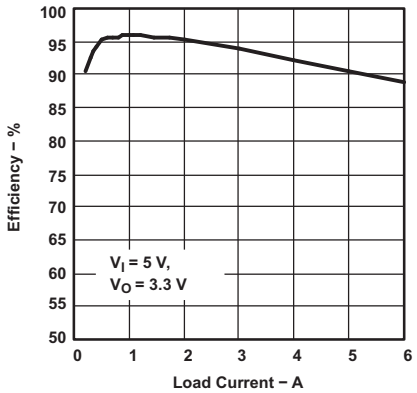

An IMPORTANT NOTICE at the end of this data sheet addresses availability, warranty, changes, use in safety-critical applications, intellectual property matters and other important disclaimers. PRODUCTION DATA.

Table of Contents

1 Features ... 1
2 Applications ... 1
3 Description ... 1
4 Revision History ... 2
5 Device Comparison Table ... 3
6 Pin Configuration and Functions ... 3
7 Specifications ... 4
7.1 Absolute Maximum Ratings ... 4
7.2 ESD Ratings ... 4
7.3 Recommended Operating Conditions ... 4
7.4 Thermal Information ... 5
7.5 Electrical Characteristics ... 5
7.6 Dissipation Ratings ... 7
7.7 Typical Characteristics ... 8
8 Detailed Description ... 10
8.1 Overview ... 10
8.2 Functional Block Diagram ... 10
8.3 Feature Description ... 11
8.4 Device Functional Modes ... 13
9 Application and Implementation ... 14
9.1 Application Information ... 14
9.2 Typical Applications ... 14
10 Power Supply Recommendations ... 19
11 Layout ... 19
11.1 Layout Guidelines ... 19
11.2 Layout Example ... 20
11.3 Thermal Considerations ... 21
12 Device and Documentation Support ... 22
12.1 Device Support ... 22
12.2 Receiving Notification of Documentation Updates 22
12.3 Community Resources ... 22
12.4 Trademarks ... 22
12.5 Electrostatic Discharge Caution ... 22
12.6 Glossary ... 22
13 Mechanical, Packaging, and Orderable Information ... 22

4 Revision History

NOTE: Page numbers for previous revisions may differ from page numbers in the current version.

Changes from Revision G (October 2015) to Revision H	Page
• Editorial changes only; no technical changes	1

Changes from Revision F (April 2007) to Revision G	Page
• Added *Pin Configuration and Functions* section, *ESD Ratings* table, *Feature Description* section, *Device Functional Modes*, *Application and Implementation* section, *Power Supply Recommendations* section, *Layout* section, *Device and Documentation Support* section, and *Mechanical, Packaging, and Orderable Information* section	1

Copyright © 2001–2015, Texas Instruments Incorporated

5 Device Comparison Table

DEVICE	OUTPUT VOLTAGE	DEVICE	OUTPUT VOLTAGE	DEVICE	OUTPUT VOLTAGE
TPS54611	0.9 V	TPS54614	1.8 V	TPS54672	DDR Memory/Adjustable
TPS54612	1.2 V	TPS54615	2.5 V	TPS54673	Pre-bias/Adjustable
TPS54613	1.5 V	TPS54616	3.3 V	TPS54680	Sequencing/Adjustable

6 Pin Configuration and Functions

PWP Package
28-Pin HTSSOP With Exposed Thermal Pad
Top View

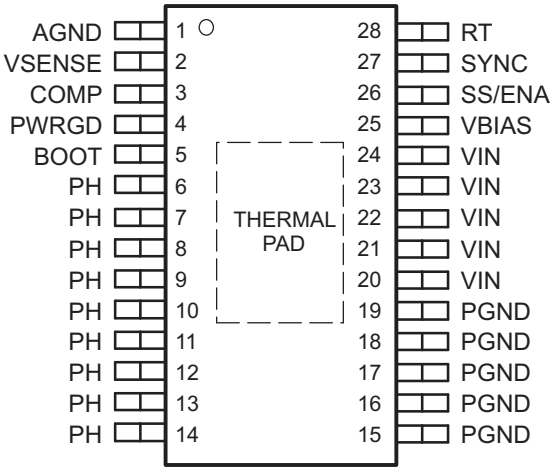

Pin Functions

PIN		TYPE(1)	DESCRIPTION
NAME	NO.		
AGND	1	G	Analog ground. Return for compensation network/output divider, slow-start capacitor, VBIAS capacitor, RT resistor and SYNC pin. Connect PowerPAD™ to AGND.
BOOT	5	S	Bootstrap output. 0.022-μF to 0.1-μF low-ESR capacitor connected from BOOT to PH generates floating drive for the high-side FET driver.
COMP	3		Error amplifier output. Connect frequency compensation network from COMP to VSENSE
PGND	15-19	G	Power ground. High current return for the low-side driver and power MOSFET. Connect PGND with large copper areas to the input and output supply returns, and negative pins of the input and output capacitors. A single point connection to AGND is recommended.
PH	6-14	O	Phase output. Junction of the internal high-side and low-side power MOSFETs, and output inductor.
PWRGD	4	O	Power good open drain output. High when VSENSE ≥ 90% V_{ref}, otherwise PWRGD is low. Note that output is low when SS/ENA is low or the internal shutdown signal is active.
RT	28	I	Frequency setting resistor input. Connect a resistor from RT to AGND to set the switching frequency. When using the SYNC pin, set the RT value for a frequency at or slightly lower than the external oscillator frequency.
SS/ENA	26	I/O	Slow-start/enable input/output. Dual function pin which provides logic input to enable/disable device operation and capacitor input to externally set the start-up time.
SYNC	27	I/O	Synchronization input. Dual function pin which provides logic input to synchronize to an external oscillator or pin select between two internally set switching frequencies. When used to synchronize to an external signal, a resistor must be connected to the RT pin.
VBIAS	25	S	Internal bias regulator output. Supplies regulated voltage to internal circuitry. Bypass VBIAS pin to AGND pin with a high quality, low-ESR 0.1-μF to 1.0-μF ceramic capacitor.

(1) I = Input, O = Output, S = Supply, G = Ground Return

Copyright © 2001–2015, Texas Instruments Incorporated

Pin Functions (continued)

PIN		TYPE(1)	DESCRIPTION
NAME	NO.		
VIN	20-24	I	Input supply for the power MOSFET switches and internal bias regulator. Bypass VIN pins to PGND pins close to device package with a high quality, low-ESR 10-µF ceramic capacitor.
VSENSE	2	I	Error amplifier inverting input. Connect to output voltage through compensation network/output divider.

7 Specifications

7.1 Absolute Maximum Ratings

over operating free-air temperature range unless otherwise noted(1)

			MIN	MAX	UNIT
V_I	Input voltage	VIN, SS/ENA, SYNC	–0.3	7	V
		RT	–0.3	6	V
		VSENSE	–0.3	4	V
		BOOT	–0.3	17	V
V_O	Output voltage	VBIAS, COMP, PWRGD	–0.3	7	V
		PH	–0.6	10	V
		PH (transient < 10 ns)		–2	V
I_O	Source current	PH	Internally Limited		
		COMP, VBIAS		6	mA
I_S	Sink current	PH		12	A
		COMP		6	mA
		SS/ENA, PWRGD		10	mA
	Voltage differential	AGND to PGND	–0.3	0.3	V
T_J	Operating virtual junction temperature		–40	125	°C
T_{stg}	Storage temperature		–65	150	°C

(1) Stresses beyond those listed under *Absolute Maximum Ratings* may cause permanent damage to the device. These are stress ratings only, and functional operation of the device at these or any other conditions beyond those indicated under *Recommended Operating Conditions* is not implied. Exposure to absolute-maximum-rated conditions for extended periods may affect device reliability.

7.2 ESD Ratings

			VALUE	UNIT
$V_{(ESD)}$	Electrostatic discharge	Human body model (HBM) per ANSI/ESDA/JEDEC JS-001, all pins (1)	–2000	V
		Charged device model (CDM), per JEDEC specification JESD22-C101, all pins (2)	–1500	V

(1) JEDEC document JEP155 states that 500-V HBM allows safe manufacturing with a standard ESD control process.
(2) JEDEC document JEP157 states that 250-V CDM allows safe manufacturing with a standard ESD control process.

7.3 Recommended Operating Conditions

	MIN	NOM	MAX	UNIT
Input voltage, V_I	3		6	V
Operating junction temperature, T_J	–40		125	°C

Copyright © 2001–2015, Texas Instruments Incorporated

7.4 Thermal Information

THERMAL METRIC[1]		TPS54610 PWP (HTSSOP) 28 PINS	UNIT
$R_{\theta JA}$	Junction-to-ambient thermal resistance	31.0	°C/W
$R_{\theta JC(top)}$	Junction-to-case (top) thermal resistance	28.3	°C/W
$R_{\theta JB}$	Junction-to-board thermal resistance	15.1	°C/W
ψ_{JT}	Junction-to-top characterization parameter	0.7	°C/W
ψ_{JB}	Junction-to-board characterization parameter	7.0	°C/W

(1) For more information about traditional and new thermal metrics, see the *Semiconductor and IC Package Thermal Metrics* application report, SPRA953.

7.5 Electrical Characteristics

over operating free-air temperature range unless otherwise noted

PARAMETER		TEST CONDITIONS	MIN	TYP	MAX	UNIT
SUPPLY VOLTAGE, VIN						
	Input voltage range, VIN		3		6	V
$I_{(Q)}$	Quiescent current	f_S = 350 kHz, SYNC ≤ 0.8 V, RT open, PH pin open	11		15.8	mA
		f_S = 550 kHz, SYNC ≥ 2.5 V, RT open, PH pin open	16		23.5	
		Shutdown, SS/ENA = 0 V		1	1.4	
UNDERVOLTAGE LOCK OUT						
	Start threshold voltage, UVLO			2.95	3.0	V
	Stop threshold voltage, UVLO		2.70	2.80		V
	Hysteresis voltage, UVLO		0.14	0.16		V
	Rising and falling edge deglitch, UVLO[1]			2.5		µs
BIAS VOLTAGE						
	Output voltage, VBIAS	$I_{(VBIAS)}$ = 0	2.70	2.80	2.90	V
	Output current, VBIAS [2]				100	µA
CUMULATIVE REFERENCE						
V_{ref}	Accuracy		0.882	0.891	0.900	V
REGULATION						
	Line regulation[2] [3]	I_L = 3 A, f_S = 350 kHz, T_J = 85°C			0.04	%/V
		I_L = 3 A, f_S = 550 kHz, T_J = 85°C			0.04	
	Load regulation[1] [3]	I_L = 0 A to 6 A, f_S = 350 kHz, T_J = 85°C			0.03	%/A
		I_L = 0 A to 6 A, f_S = 550 kHz, T_J = 85°C			0.03	
OSCILLATOR						
	Internally set—free running frequency	SYNC ≤ 0.8 V, RT open	280	350	420	kHz
		SYNC ≥ 2.5 V, RT open	440	550	660	
	Externally set—free running frequency range	RT = 180 kΩ (1% resistor to AGND)[1]	252	280	308	kHz
		RT = 100 kΩ (1% resistor to AGND)	460	500	540	
		RT = 68 kΩ (1% resistor to AGND)[1]	663	700	762	
	High level threshold, SYNC		2.5			V
	Low level threshold, SYNC				0.8	V
	Pulse duration, external synchronization, SYNC[1]		50			ns
	Frequency range, SYNC[1]		330		700	kHz

(1) Specified by design
(2) Static resistive loads only
(3) Specified by the circuit used in Figure 10

Copyright © 2001–2015, Texas Instruments Incorporated

Electrical Characteristics (continued)

over operating free-air temperature range unless otherwise noted

PARAMETER	TEST CONDITIONS	MIN	TYP	MAX	UNIT
Ramp valley (1)			0.75		V
Ramp amplitude (peak-to-peak) (1)			1		V
Minimum controllable on time (1)				200	ns
Maximum duty cycle		90%			
ERROR AMPLIFIER					
Error amplifier open loop voltage gain	1 kΩ COMP to AGND (1)	90	110		dB
Error amplifier unity gain bandwidth	Parallel 10 kΩ, 160 pF COMP to AGND (1)	3	5		MHz
Error amplifier common mode input voltage range	Powered by internal LDO (1)	0		VBIAS	V
Input bias current, VSENSE	VSENSE = V_{ref}		60	250	nA
Output voltage slew rate (symmetric), COMP		1	1.4		V/µs
PWM COMPARATOR					
PWM comparator propagation delay time,PWM comparator input to PH pin (excluding deadtime)	10-mV overdrive (1)		70	85	ns
SLOW-START/ENABLE					
Enable threshold voltage, SS/ENA		0.82	1.20	1.40	V
Enable hysteresis voltage, SS/ENA			0.03		V
Falling edge deglitch, SS/ENA (1)			2.5		µs
Internal slow-start time		2.6	3.35	4.1	ms
Charge current, SS/ENA	SS/ENA = 0 V	3	5	8	µA
Discharge current, SS/ENA	SS/ENA = 1.2 V, V_I = 2.7 V	2	2.3	4	mA
POWER GOOD					
Power good threshold voltage	VSENSE falling		90		$\%V_{ref}$
Power good hysteresis voltage (1)			3		$\%V_{ref}$
Power good falling edge deglitch (1)			35		µs
Output saturation voltage, PWRGD	$I_{(sink)}$ = 2.5 mA		0.18	0.3	V
Leakage current, PWRGD	V_I= 5.5 V			1	µA
CURRENT LIMIT					
Current limit trip point	V_I = 3 V Output shorted (1)	7.2	10		A
	V_I= 6 V Output shorted (1)	10	12		
Current limit leading edge blanking time (1)			100		ns
Current limit total response time (1)			200		ns
THERMAL SHUTDOWN					
Thermal shutdown trip point (1)		135	150	165	°C
Thermal shutdown hysteresis (1)			10		°C
OUTPUT POWER MOSFETS					
$r_{DS(on)}$ Power MOSFET switches	V_I = 6 V (4)		26	47	mΩ
	V_I = 3 V (4)		36	65	

(4) Matched MOSFETs low-side $r_{DS(on)}$ production tested, high-side $r_{DS(on)}$ specified by design

Copyright © 2001–2015, Texas Instruments Incorporated

7.6 Dissipation Ratings[(1)(2)]

PACKAGE	THERMAL IMPEDANCE JUNCTION-TO-AMBIENT	T_A = 25°C POWER RATING	T_A = 70°C POWER RATING	T_A = 85°C POWER RATING
28 Pin PWP with solder	18.2 °C/W	5.49[(3)] W	3.02 W	2.20 W
28 Pin PWP without solder	40.5 °C/W	2.48 W	1.36 W	0.99 W

(1) Test board conditions:
(a) 3 inch × 3 inch, 4 layers, thickness: 0.062 in
(b) 1.5 oz. copper traces located on the top of the PCB
(c) 1.5 oz. copper plane located on the bottom of the PCB
(d) 0.5 oz. copper planes on the 2 inner layers
(e) 12 thermal vias. See Figure 23

(2) Thermal metrics shown in *Thermal Information* refer to JEDEC High K board. Metrics in this table refer to the test board conditions listed below.

(3) Maximum power dissipation may be limited by overcurrent protection

7.7 Typical Characteristics

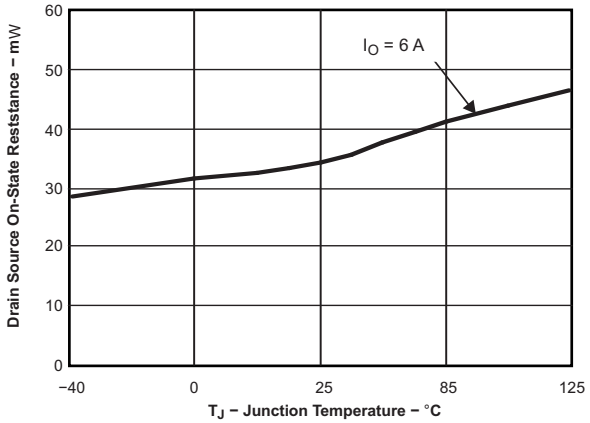

VIN = 3.3 V

Figure 1. Drain-Source On-State Resistance vs Junction Temperature

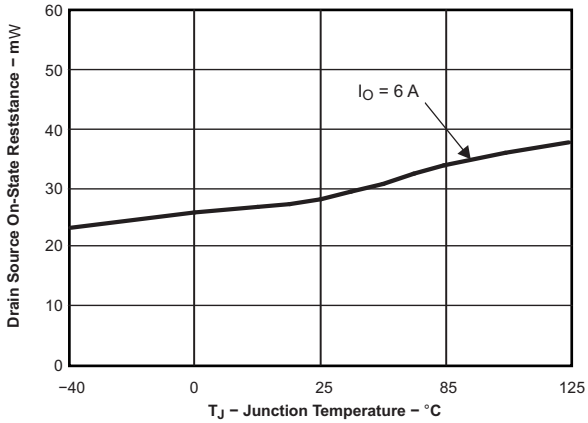

VIN = 5 V

Figure 2. Drain-Source On-State Resistance vs Junction Temperature

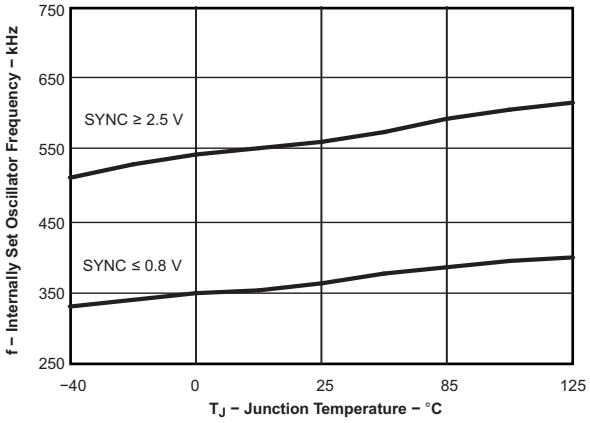

Figure 3. Internally Set Oscillator Frequency vs Junction Temperature

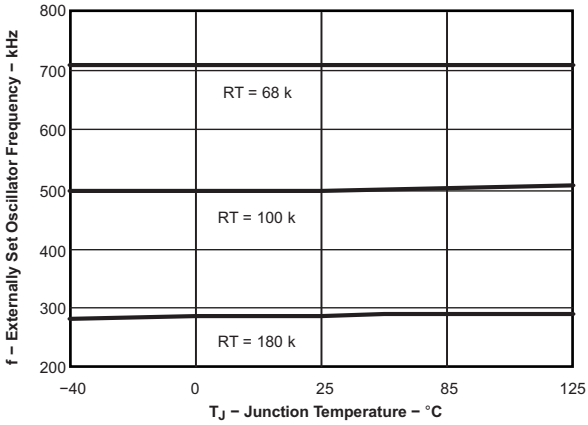

Figure 4. Externally Set Oscillator Frequency vs Junction Temperature

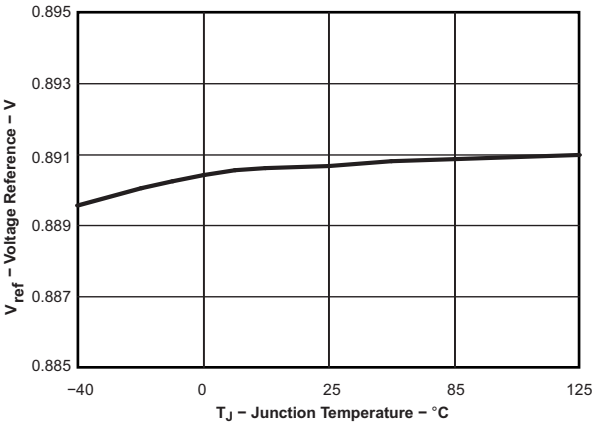

Figure 5. Voltage Reference vs Junction Temperature

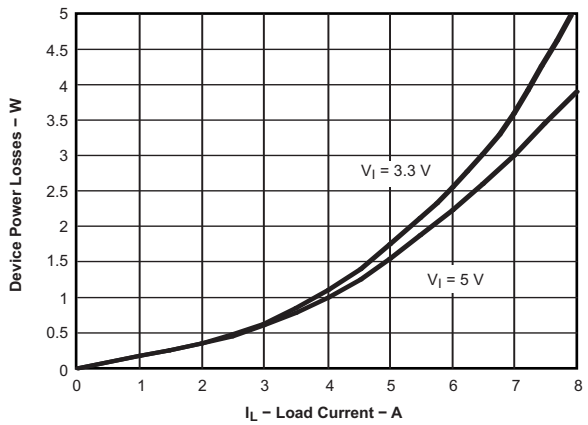

T_J = 125°C f_s = 700 kHz

Figure 6. Device Power Losses at T_J = 125°C vs Load Current

Copyright © 2001–2015, Texas Instruments Incorporated

Typical Characteristics (continued)

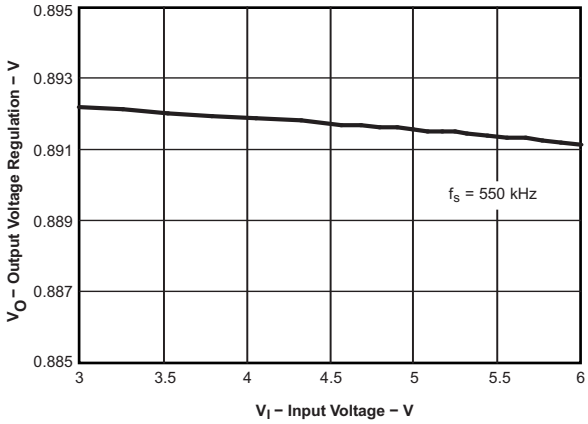

T_J = 85°C I_O = 3 A

Figure 7. Output Voltage Regulation vs Input Voltage

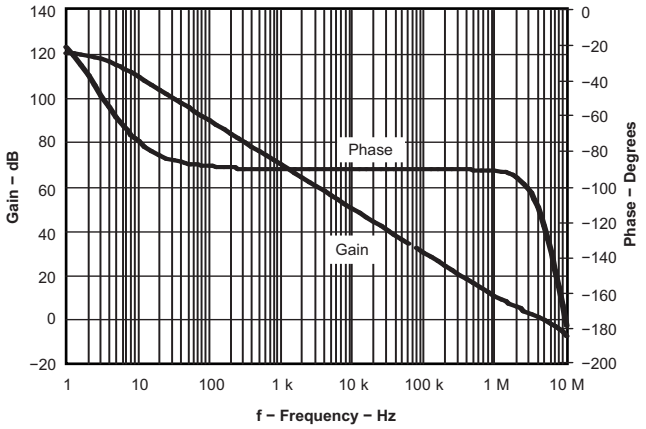

R_L= 10 kΩ C_L = 160 pF T_A = 25°C

Figure 8. Error Amplifier Open Loop Response

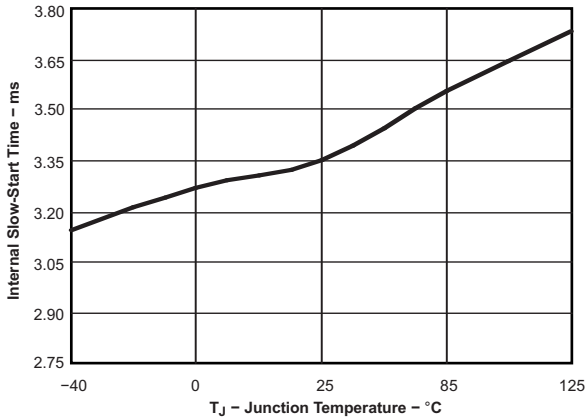

Figure 9. Internal Slow-Start Time vs Junction Temperature

8 Detailed Description

8.1 Overview

The TPS54610 low-input voltage high-output current synchronous buck PWM converter integrates all required active components. Included on the substrate with the listed features are a true, high performance, voltage error amplifier that enables maximum performance and flexibility in choosing the output filter L and C components; an under-voltage-lockout circuit to prevent start-up until the input voltage reaches 3 V; an internally or externally set slow-start circuit to limit inrush currents; and a power good output useful for processor/logic reset, fault signaling, and supply sequencing.

8.2 Functional Block Diagram

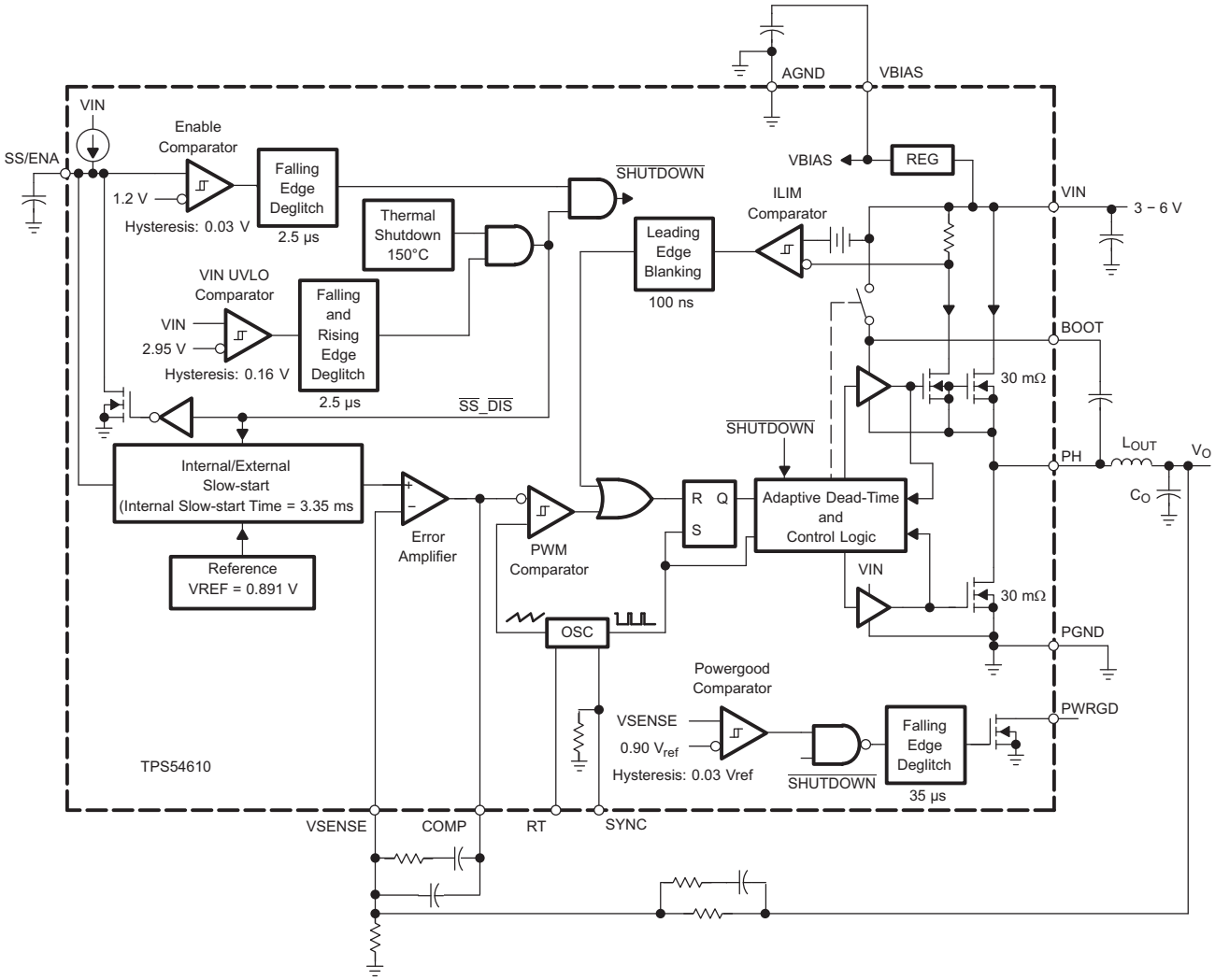

Copyright © 2001–2015, Texas Instruments Incorporated

8.3 Feature Description

8.3.1 Undervoltage Lockout (UVLO)

The TPS54610 incorporates an UVLO to keep the device disabled when the input voltage (VIN) is insufficient. During power up, internal circuits are held inactive until VIN exceeds the nominal UVLO threshold voltage of 2.95 V. Once the UVLO start threshold is reached, device start-up begins. The device operates until VIN falls below the nominal UVLO stop threshold of 2.8 V. Hysteresis in the UVLO comparator, and a 2.5-μs rising and falling edge deglitch circuit reduce the likelihood of shutting the device down due to noise on VIN.

8.3.2 Slow Start/Enable (SS/ENA)

The slow-start/enable pin provides two functions. First, the pin acts as an enable (shutdown) control by keeping the device turned off until the voltage exceeds the start threshold voltage of approximately 1.2 V. When SS/ENA exceeds the enable threshold, device start-up begins. The reference voltage fed to the error amplifier is linearly ramped up from 0 V to 0.891 V in 3.35 ms. Similarly, the converter output voltage reaches regulation in approximately 3.35 ms. Voltage hysteresis and a 2.5-μs falling edge deglitch circuit reduce the likelihood of triggering the enable due to noise.

The second function of the SS/ENA pin provides an external means of extending the slow-start time with a low-value capacitor connected between SS/ENA and AGND.

Adding a capacitor to the SS/ENA pin has two effects on start-up. First, a delay occurs between release of the SS/ENA pin and start-up of the output. The delay is proportional to the slow-start capacitor value and lasts until the SS/ENA pin reaches the enable threshold. The start-up delay is approximately:

$$t_d = C_{(SS)} \times \frac{1.2\ V}{5\ \mu A} \tag{1}$$

Second, as the output becomes active, a brief ramp-up at the internal slow-start rate may be observed before the externally set slow-start rate takes control and the output rises at a rate proportional to the slow-start capacitor. The slow-start time set by the capacitor is approximately:

$$t_{(SS)} = C_{(SS)} \times \frac{0.7\ V}{5\ \mu A} \tag{2}$$

The actual slow-start time is likely to be less than the above approximation due to the brief ramp-up at the internal rate.

8.3.3 VBIAS Regulator (VBIAS)

The VBIAS regulator provides internal analog and digital blocks with a stable supply voltage over variations in junction temperature and input voltage. A high quality, low-ESR, ceramic bypass capacitor is required on the VBIAS pin. X7R or X5R grade dielectrics are recommended because their values are more stable over temperature. The bypass capacitor must be placed close to the VBIAS pin and returned to AGND.

External loading on VBIAS is allowed, with the caution that internal circuits require a minimum VBIAS of 2.70 V, and external loads on VBIAS with ac or digital switching noise may degrade performance. The VBIAS pin may be useful as a reference voltage for external circuits.

8.3.4 Voltage Reference

The voltage reference system produces a precise V_{ref} signal by scaling the output of a temperature stable bandgap circuit. During manufacture, the bandgap and scaling circuits are trimmed to produce 0.891 V at the output of the error amplifier, with the amplifier connected as a voltage follower. The trim procedure adds to the high precision regulation of the TPS54610, since it cancels offset errors in the scale and error amplifier circuits.

8.3.5 Oscillator and PWM Ramp

The oscillator frequency can be set to internally fixed values of 350 kHz or 550 kHz using the SYNC pin as a static digital input. If a different frequency of operation is required for the application, the oscillator frequency can be externally adjusted from 280 to 700 kHz by connecting a resistor between the RT pin and AGND and floating the SYNC pin. The switching frequency is approximated by the following equation, where R is the resistance from RT to AGND:

Copyright © 2001–2015, Texas Instruments Incorporated

Feature Description (continued)

$$\text{Switching Frequency} = \frac{100\ \text{k}\Omega}{\text{R}} \times 500\ [\text{kHz}] \tag{3}$$

External synchronization of the PWM ramp is possible over the frequency range of 330 kHz to 700 kHz by driving a synchronization signal into SYNC and connecting a resistor from RT to AGND. Choose a resistor between the RT and AGND which sets the free running frequency to 80% of the synchronization signal. Table 1 summarizes the frequency selection configurations:

Table 1. Switching Frequency/Synchronization Configuration

SWITCHING FREQUENCY	SYNC PIN	RT PIN
350 kHz, internally set	Float or AGND	Float
550 kHz, internally set	≥ 2.5 V	Float
Externally set 280 kHz to 700 kHz	Float	R = 180 kΩ to 68 kΩ
Externally synchronized frequency	Synchronization signal	R = RT value for 80% of external synchronization frequency

8.3.6 Error Amplifier

The high performance, wide bandwidth, voltage error amplifier sets the TPS54610 apart from most dc/dc converters. The user is given the flexibility to use a wide range of output L and C filter components to suit the particular application needs. Type 2 or type 3 compensation can be employed using external compensation components.

8.3.7 PWM Control

Signals from the error amplifier output, oscillator, and current limit circuit are processed by the PWM control logic. Referring to the internal block diagram, the control logic includes the PWM comparator, OR gate, PWM latch, and portions of the adaptive dead-time and control logic block. During steady-state operation below the current limit threshold, the PWM comparator output and oscillator pulse train alternately reset and set the PWM latch. Once the PWM latch is reset, the low-side FET remains on for a minimum duration set by the oscillator pulse width. During this period, the PWM ramp discharges rapidly to its valley voltage. When the ramp begins to charge back up, the low-side FET turns off and high-side FET turns on. As the PWM ramp voltage exceeds the error amplifier output voltage, the PWM comparator resets the latch, thus turning off the high-side FET and turning on the low-side FET. The low-side FET remains on until the next oscillator pulse discharges the PWM ramp.

During transient conditions, the error amplifier output could be below the PWM ramp valley voltage or above the PWM peak voltage. If the error amplifier is high, the PWM latch is never reset, and the high-side FET remains on until the oscillator pulse signals the control logic to turn the high-side FET off and the low-side FET on. The device operates at its maximum duty cycle until the output voltage rises to the regulation set-point, setting VSENSE to approximately the same voltage as VREF. If the error amplifier output is low, the PWM latch is continually reset and the high-side FET does not turn on. The low-side FET remains on until the VSENSE voltage decreases to a range that allows the PWM comparator to change states. The TPS54610 is capable of sinking current continuously until the output reaches the regulation set-point.

If the current limit comparator trips for longer than 100 ns, the PWM latch resets before the PWM ramp exceeds the error amplifier output. The high-side FET turns off and low-side FET turns on to decrease the energy in the output inductor and consequently the output current. This process is repeated each cycle in which the current limit comparator is tripped.

8.3.8 Dead-Time Control and MOSFET Drivers

Adaptive dead-time control prevents shoot-through current from flowing in both N-channel power MOSFETs during the switching transitions by actively controlling the turnon times of the MOSFET drivers. The high-side driver does not turn on until the voltage at the gate of the low-side FET is below 2 V. While the low-side driver does not turn on until the voltage at the gate of the high-side MOSFET is below 2 V.

Copyright © 2001–2015, Texas Instruments Incorporated

The high-side and low-side drivers are designed with 300-mA source and sink capability to quickly drive the power MOSFETs gates. The low-side driver is supplied from VIN, while the high-side drive is supplied from the BOOT pin. A bootstrap circuit uses an external BOOT capacitor and an internal 2.5-Ω bootstrap switch connected between the VIN and BOOT pins. The integrated bootstrap switch improves drive efficiency and reduces external component count.

8.3.9 Overcurrent Protection

The cycle-by-cycle current limiting is achieved by sensing the current flowing through the high-side MOSFET and comparing this signal to a preset overcurrent threshold. The high side MOSFET is turned off within 200 ns of reaching the current limit threshold. A 100-ns leading edge blanking circuit prevents current limit false tripping. Current limit detection occurs only when current flows from VIN to PH when sourcing current to the output filter. Load protection during current sink operation is provided by thermal shutdown.

8.3.10 Thermal Shutdown

The device uses the thermal shutdown to turn off the power MOSFETs and disable the controller if the junction temperature exceeds 150°C. The device is released from shutdown automatically when the junction temperature decreases to 10°C below the thermal shutdown trip point, and starts up under control of the slow-start circuit.

Thermal shutdown provides protection when an overload condition is sustained for several milliseconds. With a persistent fault condition, the device cycles continuously; starting up by control of the soft-start circuit, heating up due to the fault condition, and then shutting down upon reaching the thermal shutdown trip point. This sequence repeats until the fault condition is removed.

8.3.11 Power-Good (PWRGD)

The power good circuit monitors for under voltage conditions on VSENSE. If the voltage on VSENSE is 10% below the reference voltage, the open-drain PWRGD output is pulled low. PWRGD is also pulled low if VIN is less than the UVLO threshold or SS/ENA is low, or a thermal shutdown occurs. When VIN ≥ UVLO threshold, SS/ENA ≥ enable threshold, and VSENSE > 90% of V_{ref}, the open drain output of the PWRGD pin is high. A hysteresis voltage equal to 3% of V_{ref} and a 35-µs falling edge deglitch circuit prevent tripping of the power good comparator due to high frequency noise.

8.4 Device Functional Modes

8.4.1 Continuous Conduction Mode

The TPS54610 devices operate in continuous conduction mode, that is, the low-side MOSFET runs fully complimentary to the high-side MOSFET regardless of output current.

8.4.2 Switching Frequency Selection/Synchronization

Depending on the configuration of the RT and SYNC pins, the TPS54610 can be configured to switch at 350 kHz, or 550 kHz without external components, or any frequency between 280 kHz and 700 kHz as configured by a resistor from the RT pin to ground. The TPS54610 can also be synchronized to an external clock using the SYNC pin. See Table 1 for more information.

9 Application and Implementation

NOTE

Information in the following applications sections is not part of the TI component specification, and TI does not warrant its accuracy or completeness. TI's customers are responsible for determining suitability of components for their purposes. Customers should validate and test their design implementation to confirm system functionality.

9.1 Application Information

The TPS54610 is a 3 V to 6 V input, 6 A output synchronous buck PWM switcher. Ideal applications are: broadband, networking and optical communications infrastructure, and portable computing/notebook PCs.

9.2 Typical Applications

9.2.1 High Frequency Switching Regulator Using Ceramic Output Capacitors

Figure 10 shows the schematic diagram for a typical TPS54610 application. The TPS54610 (U1) can provide greater than 6 A of output current at a nominal output voltage of 3.3 V.

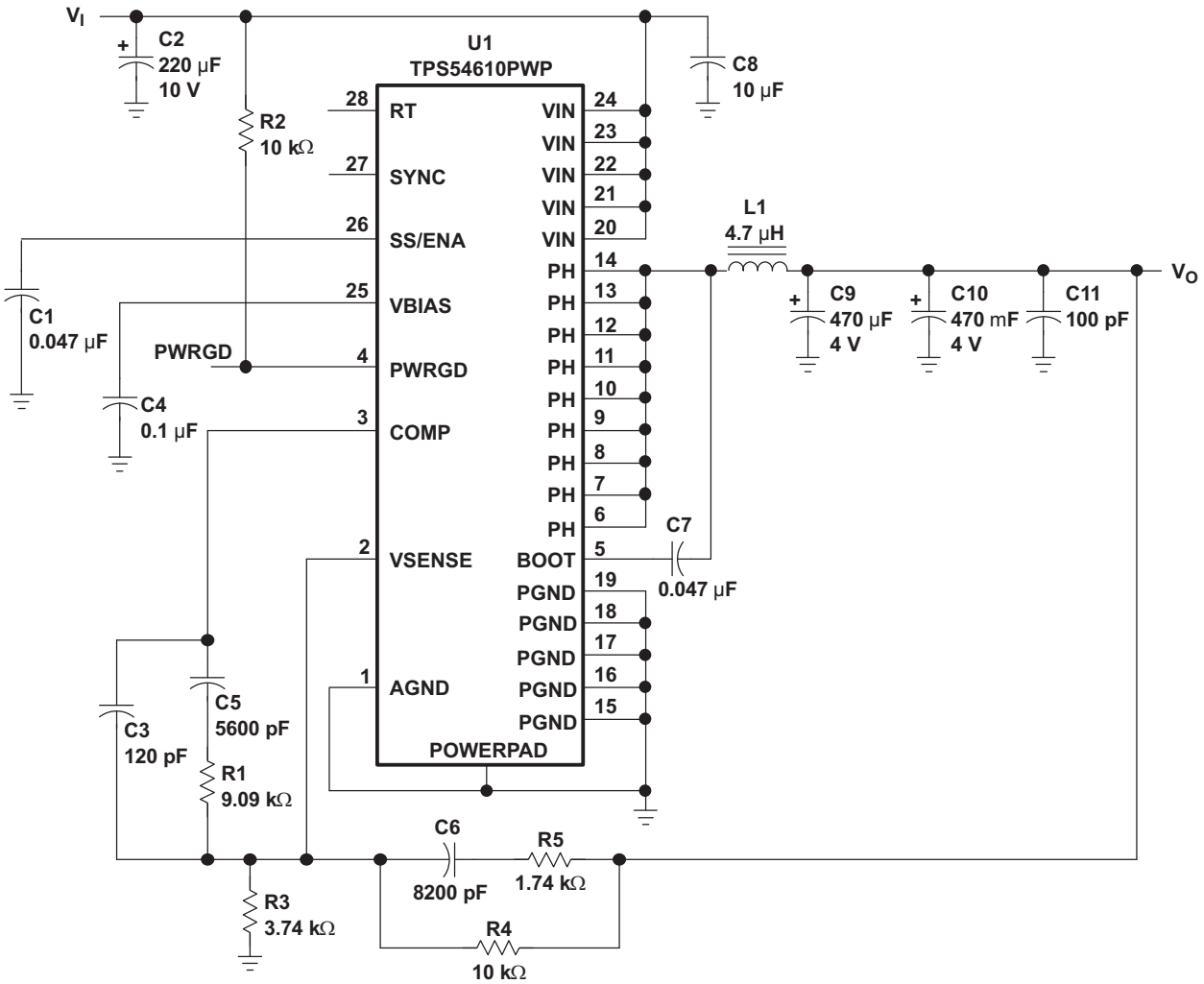

Figure 10. Application Circuit

Copyright © 2001–2015, Texas Instruments Incorporated

Typical Applications (continued)

9.2.1.1 Design Requirements

This guide illustrates the design of a high frequency switching regulator using ceramic output capacitors. A few parameters must be known in order to start the design process. These requirements are typically determined at the system level. For this example, start with the following known parameters:

Table 2. Design Parameters

DESIGN PARAMETER	EXAMPLE VALUE
Output Voltage	3.3 V
Maximum Output Current	6 A
Input Voltage	6 V

9.2.1.2 Detailed Design Procedure

9.2.1.2.1 Component Selection

The values for the components used in this design example were selected using the SWIFT designer software tool. SWIFT designer provides a complete design environment for developing dc-dc converters using the TPS54610.

9.2.1.2.2 Input Filter

The input to the circuit is a nominal 5 VDC. The input filter C2 is a 220-μF POSCAP capacitor, with a maximum allowable ripple current of 3 A. C8 provides high frequency decoupling of the TPS54610 from the input supply and must be located as close as possible to the device. Ripple current is carried in both C2 and C8, and the return path to PGND must avoid the current circulating in the output capacitors C9 and C10.

9.2.1.2.3 Feedback Circuit

The resistor divider network of R3 and R4 sets the output voltage for the circuit at 3.3 V. R4, along with R1, R5, C3, C5, and C6 form the loop compensation network for the circuit. For this design, a Type 3 topology is used.

9.2.1.2.4 Operating Frequency

In the application circuit, the 350 kHz operation is selected by leaving RT and SYNC open. Connecting a 180 kΩ to 68 kΩ resistor between RT (pin 28) and analog ground can be used to set the switching frequency to 280 kHz to 700 kHz. To calculate the RT resistor, use the equation below:

$$R = \frac{500\ \text{kHz}}{\text{Switching Frequency}} \times 100\,[\text{k}\Omega] \tag{4}$$

9.2.1.2.5 Output Filter

The output filter is composed of a 4.7-μH inductor and two 470-μF capacitors. The inductor is a low dc resistance (12 mΩ) type, Coiltronics UP3B-4R7. The capacitors used are 4-V POSCAP types with a maximum ESR of 0.040 Ω. The feedback loop is compensated so that the unity gain frequency is approximately 25 kHz.

9.2.1.3 Application Curves

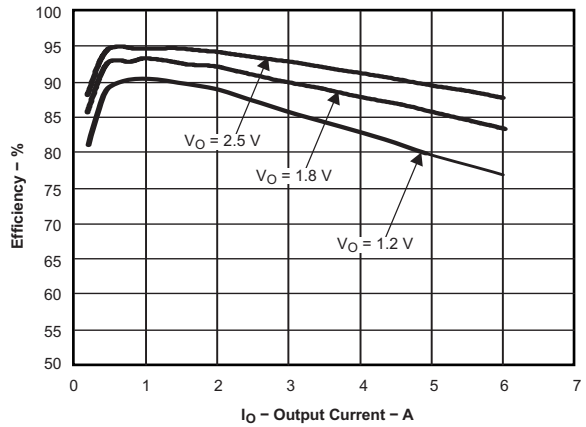

V_I = 3.3 V f = 550 kHz L = 4.7 µH
T_A = 25°C

Figure 11. Efficiency vs Output Current

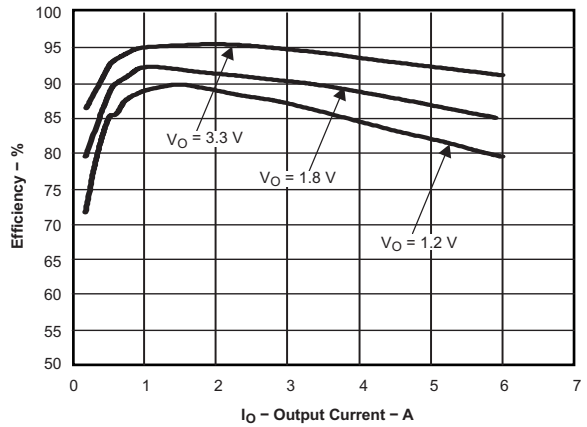

V_I = 5 V f = 550 kHz L = 4.7 µH
T_A = 25°C

Figure 12. Efficiency vs Output Current

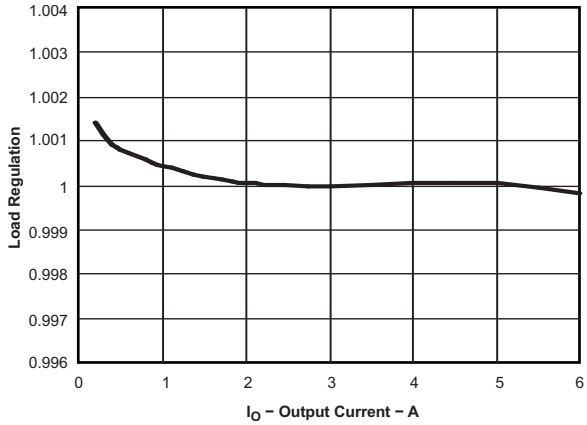

V_I = 5 V f = 550 kHz V_O = 3.3 V
T_A = 25°C

Figure 13. Load Regulation vs Output Current

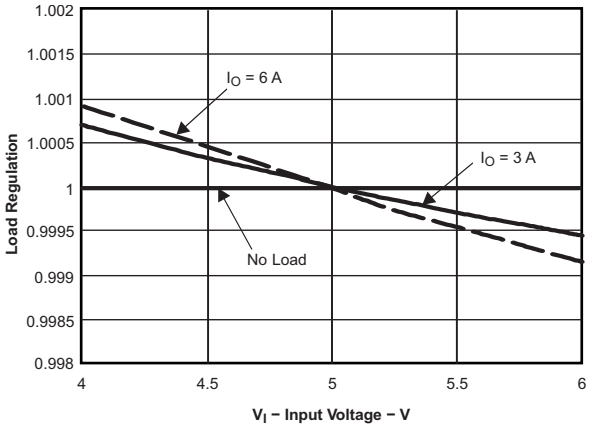

V_I = 5 V f = 550 kHz V_O = 3.3 V
T_A = 25°C

Figure 14. Line Regulation vs Input Voltage

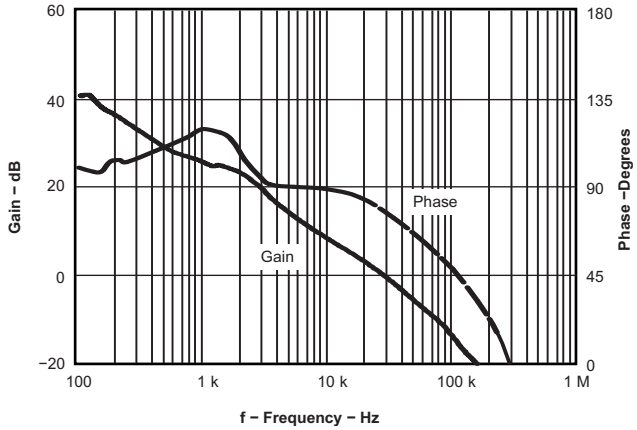

V_I = 5 V f = 550 kHz V_O = 3.3 V
T_A = 25°C I_O = 6A

Figure 15. Loop Response

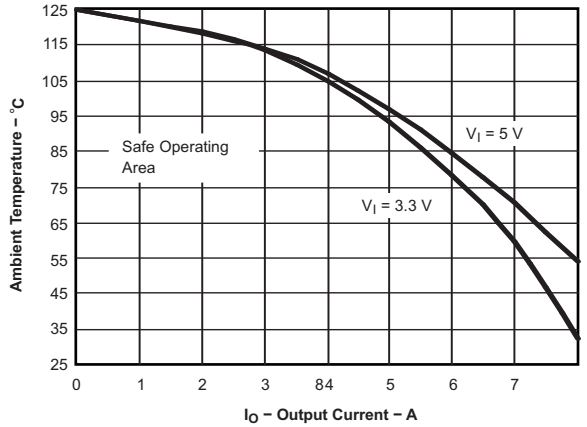

T_J = 125°C f_s = 700 kHz

Figure 16. Ambient Temperature vs Load Current

Copyright © 2001–2015, Texas Instruments Incorporated

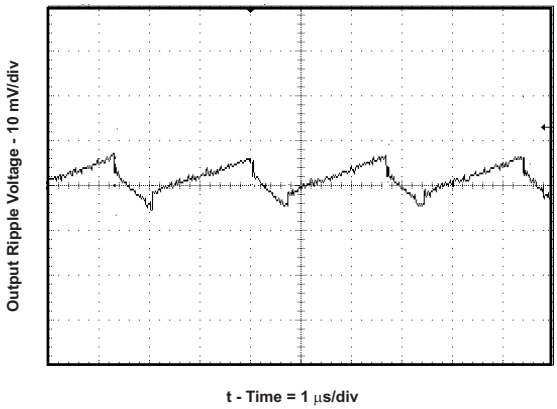

V_I = 5 V V_O = 3.3 V 6 A, 350 kHz

Figure 17. Output Ripple Voltage

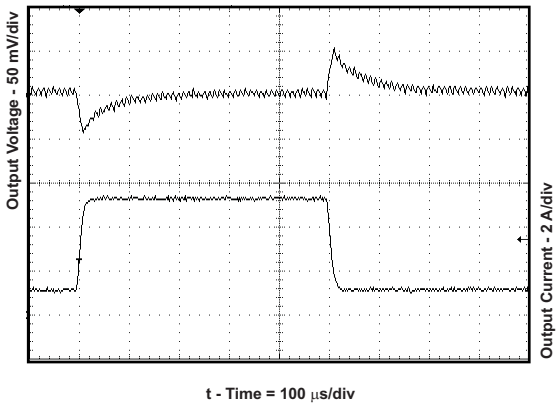

V_I = 5 V 1 A to 5 A

Figure 18. Load Transient Response

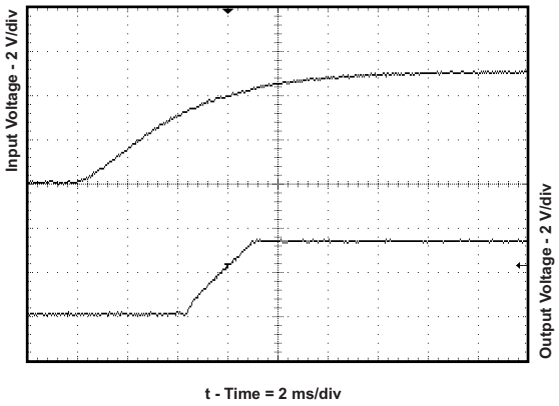

V_I = 5 V No Slow-Start Cap

Figure 19. Slow-Start Timing

9.2.2 High Frequency Application

Figure 20 shows the schematic diagram for a reduced size, high frequency application using the TPS54610. The TPS54610 (U1) can provide up to 6 A of output current at a nominal outputvoltage of 1.8 V. A small size 0.56 uH inductor is used and the switching frequency is set to 680 kHz by R1. The compensation network is optimized for fast transient response as shown in Figure 20.

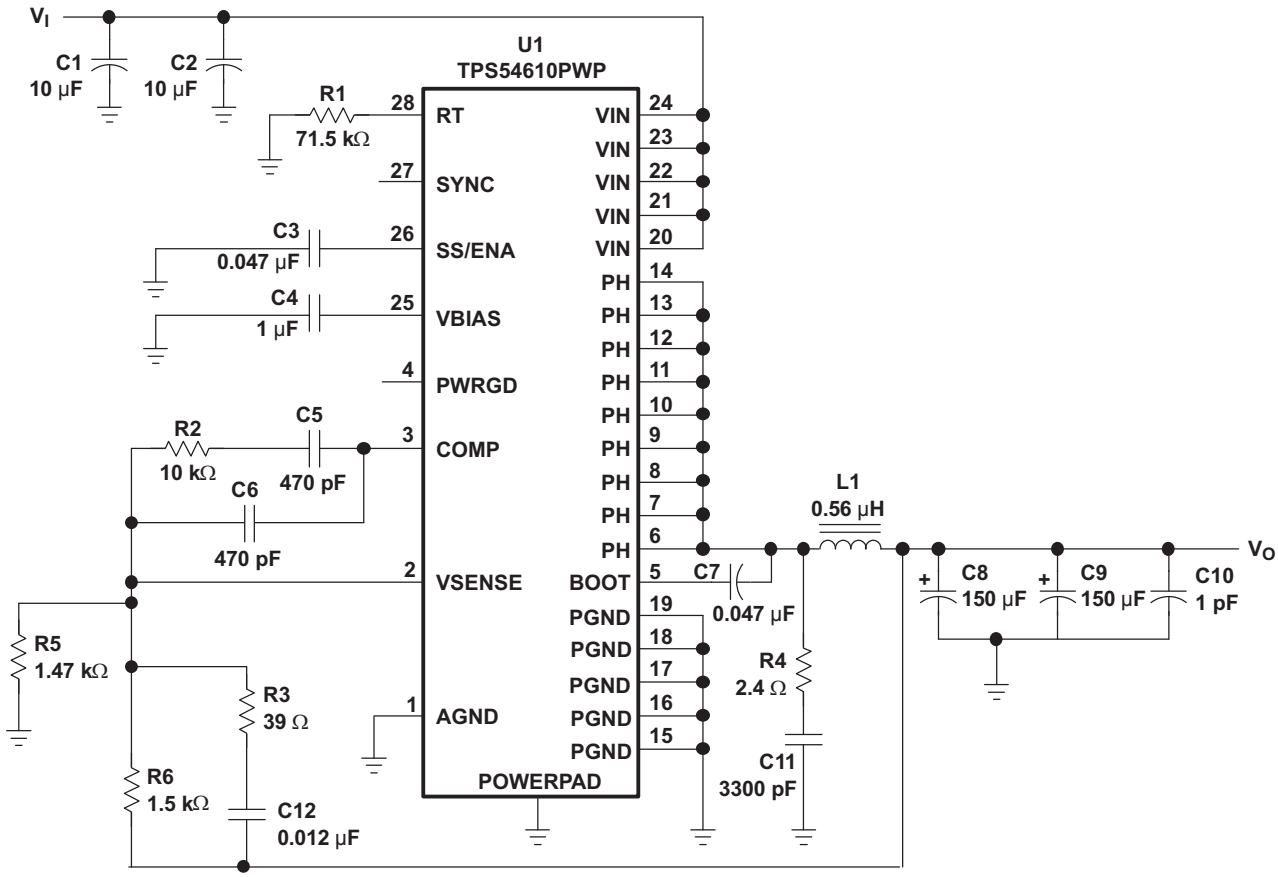

Figure 20. Small Size, High Frequency Design

9.2.2.1 Design Requirements

Refer to *Design Requirements* for the High Frequency Application Design Requirements.

9.2.2.2 Detailed Design Procedure

Refer to *Detailed Design Procedure* for the High Frequency Application Detailed Design Procedure.

Copyright © 2001–2015, Texas Instruments Incorporated

9.2.2.3 Application Curve

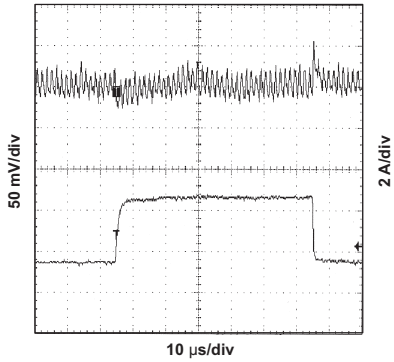

Figure 21. Transient Response, 1.5-A to 4.5-A Step

10 Power Supply Recommendations

The device is designed to operate from an input voltage supply range between 3 V and 6 V. This input supply should be well regulated. If the input supply is located more than a few inches from the TPS54610 converter additional bulk capacitance may be required.

11 Layout

11.1 Layout Guidelines

- For proper thermal performance, the exposed thermal PowerPAD underneath the integrated circuit package must be soldered to the printed-circuit board.
- For good thermal performance, the PowerPAD underneath the integrated circuit TPS54610 needs to be soldered well to the printed-circuit board.
- The VIN pins are connected together on the printed-circuit board (PCB) and bypassed with a low-ESR ceramic-bypass capacitor.
- Care should be taken to minimize the loop area formed by the bypass capacitor connections, the VIN pins, and the TPS54610 ground pins.
- The minimum recommended bypass capacitance is 10-mF ceramic capacitor with a X5R or X7R dielectric and the optimum placement is closest to the VIN pins and the PGND pins.
- The TPS54610 has two internal grounds (analog and power). Inside the TPS54610, the analog ground ties to all of the noise sensitive signals, while the power ground ties to the noisier power signals. Noise injected between the two grounds can degrade the performance of the TPS54610, particularly at higher output currents.
- However, ground noise on an analog ground plane can also cause problems with some of the control and bias signals. Therefore, separate analog and power ground traces are recommended.
- There is an area of ground on the top layer directly under the IC, with an exposed area for connection to the PowerPAD. Use vias to connect this ground area to any internal ground planes.
- Additional vias are also used at the ground side of the input and output filter capacitors. The AGND and PGND pins are tied to the PCB ground by connecting them to the ground area under the device as shown.
- The only components that tie directly to the power ground plane are the input capacitors, the output capacitors, the input voltage decoupling capacitor, and the PGND pins of the TPS54610.
- Use a separate wide trace for the analog ground signal path. The analog ground is used for the voltage set point divider, timing resistor RT, slow-start capacitor and bias capacitor grounds. Connect this trace directly to AGND (Pin 1).
- Since the PH connection is the switching node, the inductor is located close to the PH pins. The area of theThe PH pins are tied together and routed to the output inductor. PCB conductor is minimized to prevent excessive capacitive coupling.
- Connect the boot capacitor between the phase node and the BOOT pin as shown. Keep the boot capacitor

Layout Guidelines (continued)

close to the IC and minimize the conductor trace lengths.

- Connect the output filter capacitor(s) as shown between the VOUT trace and PGND. It is important to keep the loop formed by the PH pins, LOUT, COUT and PGND as small as practical.
- Place the compensation components from the VOUT trace to the VSENSE and COMP pins. Do not place these components too close to the PH trace. Due to the size of the IC package and the device pin-out, they must be routed close, but maintain as much separation as possible while still keeping the layout compact.
- Connect the bias capacitor from the VBIAS pin to analog ground using the isolated analog ground trace.
- If a slow-start capacitor or RT resistor is used, or if the SYNC pin is used to select 350-kHz operating frequency, connect them to this trace.

11.2 Layout Example

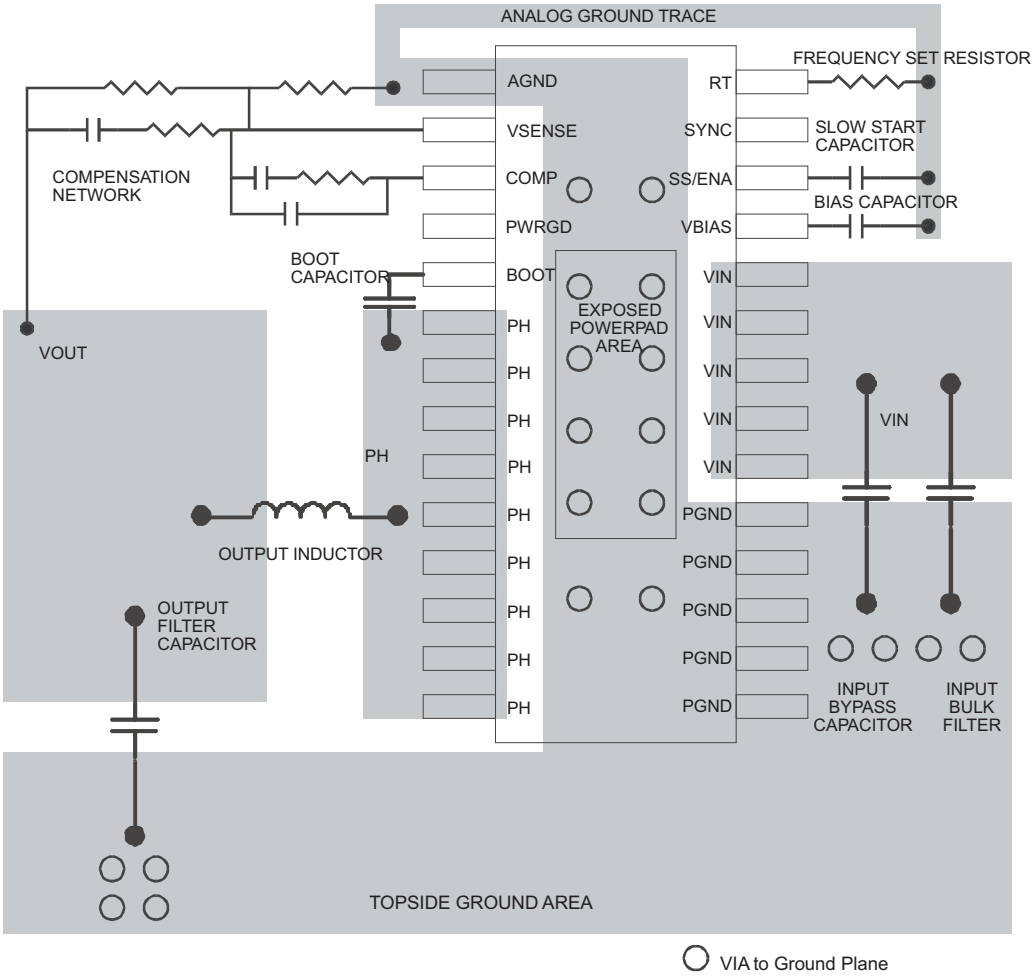

Figure 22. Recommended Land Pattern for 28-Pin PWP PowerPAD

Copyright © 2001–2015, Texas Instruments Incorporated

11.3 Thermal Considerations

For operation at full rated load current, the analog ground plane must provide an adequate heat dissipating area. A 3-inch by 3-inch plane of 1 ounce copper is recommended, though not mandatory, depending on ambient temperature and airflow. Most applications have larger areas of internal ground plane available, and the PowerPAD™ must be connected to the largest area available. Additional areas on the top or bottom layers also help dissipate heat, and any area available must be used when 6 A or greater operation is desired. Connection from the exposed area of the PowerPAD™ to the analog ground plane layer must be made using 0.013 inch diameter vias to avoid solder wicking through the vias. Eight vias must be in the PowerPAD area with four additional vias located under the device package. The size of the vias under the package, but not in the exposed thermal pad area, can be increased to 0.018. Additional vias beyond the twelve recommended that enhance thermal performance must be included in areas not under the device package.

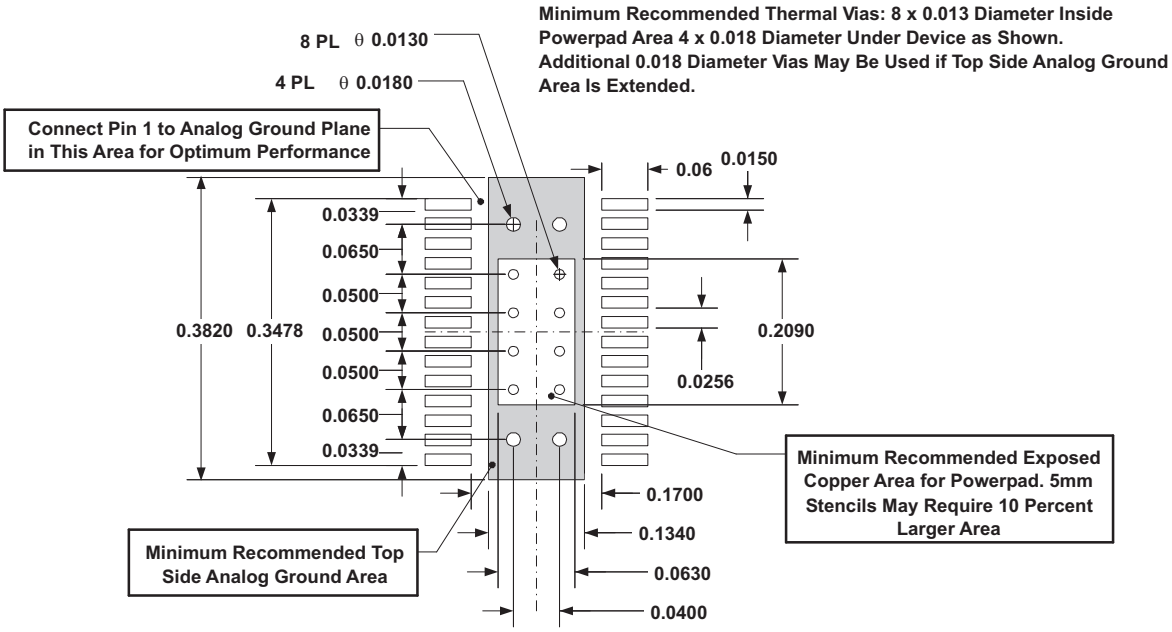

Figure 23. Recommended Land Pattern for 28-Pin PWP PowerPAD

12 Device and Documentation Support

12.1 Device Support

12.1.1 Related DC/DC Products

- TPS40000—dc/dc controller
- TPS759xx—7.5 A low dropout regulator
- PT6440 series—6 A plugin modules

Application information is available in *Designing for Small-Size, High-Frequency Applications With Swift™ Family of Synchronous Buck Regulators*.

12.2 Receiving Notification of Documentation Updates

To receive notification of documentation updates, navigate to the device product folder on ti.com. In the upper right corner, click on *Alert me* to register and receive a weekly digest of any product information that has changed. For change details, review the revision history included in any revised document.

12.3 Community Resources

The following links connect to TI community resources. Linked contents are provided "AS IS" by the respective contributors. They do not constitute TI specifications and do not necessarily reflect TI's views; see TI's Terms of Use.

TI E2E™ Online Community ***TI's Engineer-to-Engineer (E2E) Community.*** Created to foster collaboration among engineers. At e2e.ti.com, you can ask questions, share knowledge, explore ideas and help solve problems with fellow engineers.

Design Support ***TI's Design Support*** Quickly find helpful E2E forums along with design support tools and contact information for technical support.

12.4 Trademarks

PowerPAD, E2E are trademarks of Texas Instruments.
All other trademarks are the property of their respective owners.

12.5 Electrostatic Discharge Caution

These devices have limited built-in ESD protection. The leads should be shorted together or the device placed in conductive foam during storage or handling to prevent electrostatic damage to the MOS gates.

12.6 Glossary

SLYZ022 — *TI Glossary*.

This glossary lists and explains terms, acronyms, and definitions.

13 Mechanical, Packaging, and Orderable Information

The following pages include mechanical, packaging, and orderable information. This information is the most current data available for the designated devices. This data is subject to change without notice and revision of this document. For browser-based versions of this data sheet, refer to the left-hand navigation.

Copyright © 2001–2015, Texas Instruments Incorporated

PACKAGING INFORMATION

Orderable part number	Status (1)	Material type (2)	Package | Pins	Package qty | Carrier	RoHS (3)	Lead finish/ Ball material (4)	MSL rating/ Peak reflow (5)	Op temp (°C)	Part marking (6)
TPS54610PWPR	Active	Production	HTSSOP (PWP) | 28	2000 | LARGE T&R	Yes	NIPDAU	Level-2-260C-1 YEAR	-40 to 85	TPS54610
TPS54610PWPR.A	Active	Production	HTSSOP (PWP) | 28	2000 | LARGE T&R	Yes	NIPDAU	Level-2-260C-1 YEAR	-40 to 85	TPS54610
TPS54610PWPRG4	Active	Production	HTSSOP (PWP) | 28	2000 | LARGE T&R	Yes	NIPDAU	Level-2-260C-1 YEAR	-40 to 85	TPS54610

(1) **Status:** For more details on status, see our product life cycle.

(2) **Material type:** When designated, preproduction parts are prototypes/experimental devices, and are not yet approved or released for full production. Testing and final process, including without limitation quality assurance, reliability performance testing, and/or process qualification, may not yet be complete, and this item is subject to further changes or possible discontinuation. If available for ordering, purchases will be subject to an additional waiver at checkout, and are intended for early internal evaluation purposes only. These items are sold without warranties of any kind.

(3) **RoHS values:** Yes, No, RoHS Exempt. See the TI RoHS Statement for additional information and value definition.

(4) **Lead finish/Ball material:** Parts may have multiple material finish options. Finish options are separated by a vertical ruled line. Lead finish/Ball material values may wrap to two lines if the finish value exceeds the maximum column width.

(5) **MSL rating/Peak reflow:** The moisture sensitivity level ratings and peak solder (reflow) temperatures. In the event that a part has multiple moisture sensitivity ratings, only the lowest level per JEDEC standards is shown. Refer to the shipping label for the actual reflow temperature that will be used to mount the part to the printed circuit board.

(6) **Part marking:** There may be an additional marking, which relates to the logo, the lot trace code information, or the environmental category of the part.

Multiple part markings will be inside parentheses. Only one part marking contained in parentheses and separated by a "~" will appear on a part. If a line is indented then it is a continuation of the previous line and the two combined represent the entire part marking for that device.

Important Information and Disclaimer: The information provided on this page represents TI's knowledge and belief as of the date that it is provided. TI bases its knowledge and belief on information provided by third parties, and makes no representation or warranty as to the accuracy of such information. Efforts are underway to better integrate information from third parties. TI has taken and continues to take reasonable steps to provide representative and accurate information but may not have conducted destructive testing or chemical analysis on incoming materials and chemicals. TI and TI suppliers consider certain information to be proprietary, and thus CAS numbers and other limited information may not be available for release.

In no event shall TI's liability arising out of such information exceed the total purchase price of the TI part(s) at issue in this document sold by TI to Customer on an annual basis.

OTHER QUALIFIED VERSIONS OF TPS54610 :

- Enhanced Product : TPS54610-EP

NOTE: Qualified Version Definitions:

- Enhanced Product - Supports Defense, Aerospace and Medical Applications

TAPE AND REEL INFORMATION

REEL DIMENSIONS

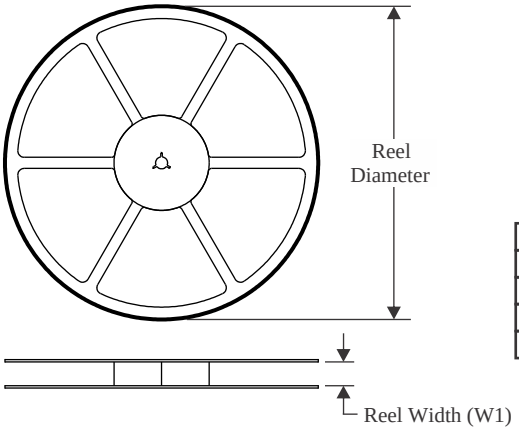

TAPE DIMENSIONS

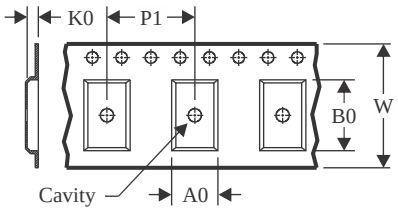

A0	Dimension designed to accommodate the component width
B0	Dimension designed to accommodate the component length
K0	Dimension designed to accommodate the component thickness
W	Overall width of the carrier tape
P1	Pitch between successive cavity centers

QUADRANT ASSIGNMENTS FOR PIN 1 ORIENTATION IN TAPE

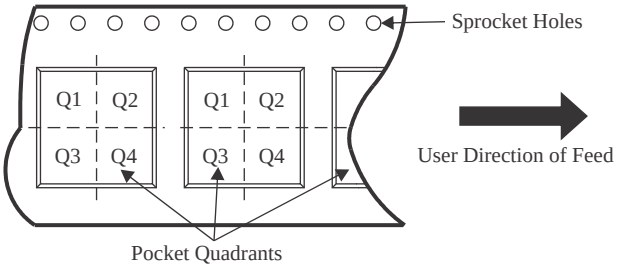

*All dimensions are nominal

Device	Package Type	Package Drawing	Pins	SPQ	Reel Diameter (mm)	Reel Width W1 (mm)	A0 (mm)	B0 (mm)	K0 (mm)	P1 (mm)	W (mm)	Pin1 Quadrant
TPS54610PWPR	HTSSOP	PWP	28	2000	330.0	16.4	6.75	10.1	1.8	12.0	16.0	Q1

TAPE AND REEL BOX DIMENSIONS

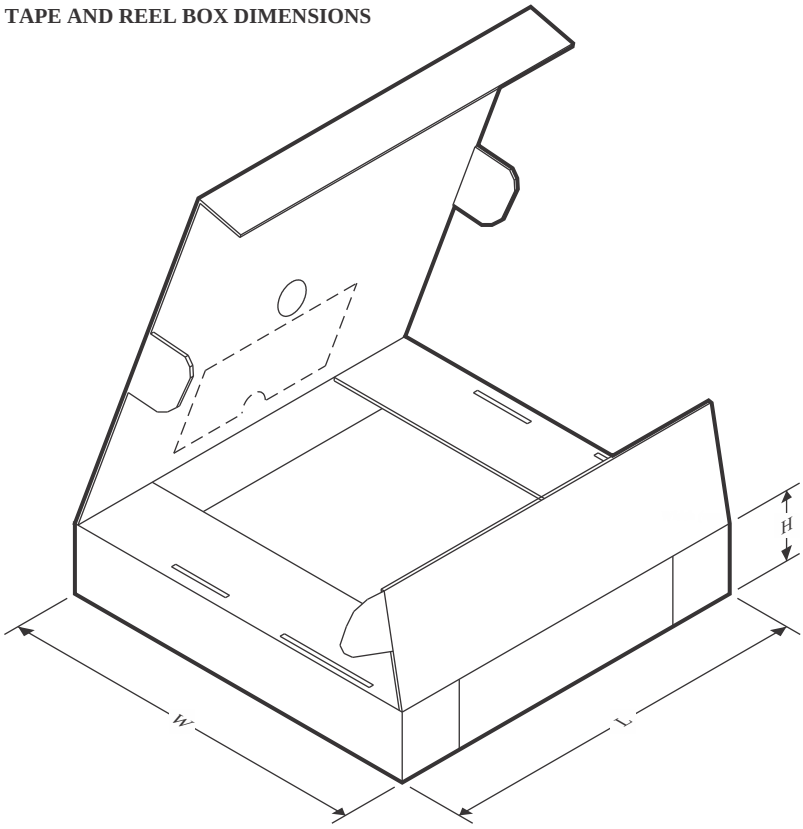

*All dimensions are nominal

Device	Package Type	Package Drawing	Pins	SPQ	Length (mm)	Width (mm)	Height (mm)
TPS54610PWPR	HTSSOP	PWP	28	2000	353.0	353.0	32.0

GENERIC PACKAGE VIEW

PWP 28

PowerPAD™ TSSOP - 1.2 mm max height

4.4 x 9.7, 0.65 mm pitch

SMALL OUTLINE PACKAGE

This image is a representation of the package family, actual package may vary.
Refer to the product data sheet for package details.

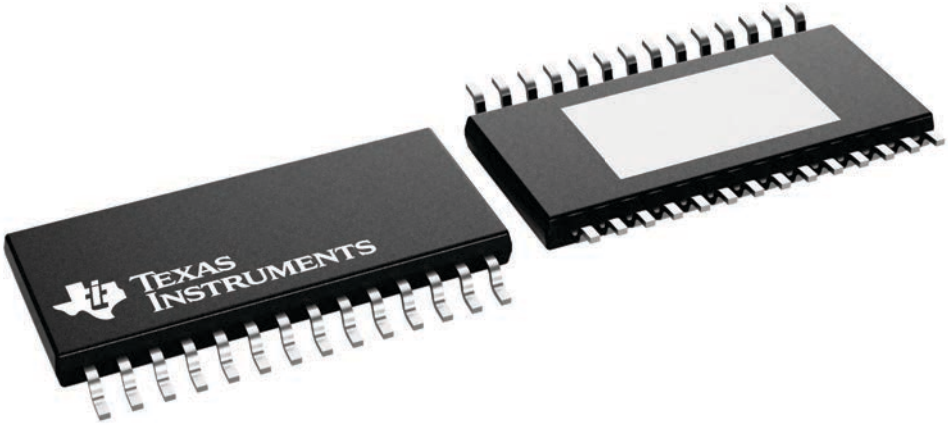

4224765/B

IMPORTANT NOTICE AND DISCLAIMER

TI PROVIDES TECHNICAL AND RELIABILITY DATA (INCLUDING DATASHEETS), DESIGN RESOURCES (INCLUDING REFERENCE DESIGNS), APPLICATION OR OTHER DESIGN ADVICE, WEB TOOLS, SAFETY INFORMATION, AND OTHER RESOURCES “AS IS” AND WITH ALL FAULTS, AND DISCLAIMS ALL WARRANTIES, EXPRESS AND IMPLIED, INCLUDING WITHOUT LIMITATION ANY IMPLIED WARRANTIES OF MERCHANTABILITY, FITNESS FOR A PARTICULAR PURPOSE OR NON-INFRINGEMENT OF THIRD PARTY INTELLECTUAL PROPERTY RIGHTS.

These resources are intended for skilled developers designing with TI products. You are solely responsible for (1) selecting the appropriate TI products for your application, (2) designing, validating and testing your application, and (3) ensuring your application meets applicable standards, and any other safety, security, regulatory or other requirements.

These resources are subject to change without notice. TI grants you permission to use these resources only for development of an application that uses the TI products described in the resource. Other reproduction and display of these resources is prohibited. No license is granted to any other TI intellectual property right or to any third party intellectual property right. TI disclaims responsibility for, and you fully indemnify TI and its representatives against any claims, damages, costs, losses, and liabilities arising out of your use of these resources.

TI’s products are provided subject to TI’s Terms of Sale, TI’s General Quality Guidelines, or other applicable terms available either on ti.com or provided in conjunction with such TI products. TI’s provision of these resources does not expand or otherwise alter TI’s applicable warranties or warranty disclaimers for TI products. Unless TI explicitly designates a product as custom or customer-specified, TI products are standard, catalog, general purpose devices.

TI objects to and rejects any additional or different terms you may propose.

Copyright © 2026, Texas Instruments Incorporated

Last updated 10/2025