TPS650352-Q1 Automotive Camera PMIC

1 Features

- Qualified for automotive applications
- Systematic capability of up to ASIL D and SIL 3 targeted
- Hardware integrity up to ASIL B and SIL 2 targeted
- Advanced diagnostics and protection
- AEC-Q100 grade 1 qualified
  - -40°C to +125°C ambient operating temperature range
- Three step-down converters:
  - BUCK1 V_{IN} range from 4.0V to 18.3V
  - BUCK1 V_{OUT} range from 2.5V to 4.0V
  - BUCK1 output current up to 1500mA
  - BUCK2 and BUCK3 V_{IN} range from 2.5V to 5.5V
  - BUCK2 and BUCK3 V_{OUT} range from 0.9V to 1.9V
  - BUCK2 output current up to 1200mA
  - BUCK3 output current up to 1200mA
  - Spread-spectrum clock (SSC) generation for reduced EMI
  - 2.3MHz forced fixed switching frequency PWM operation
- One low dropout (LDO) regulator:
  - V_{IN} range from 2.5V to 5.5V
  - V_{OUT} range from 1.8V to 3.3V
  - Low noise and high PSRR
  - Adjustable output voltage through I^2C
  - Up to 300mA output current
- 3.0mm × 3.5mm 22-pin WQFN with wettable flanks

2 Applications

- Automotive camera modules
  - Surround view camera modules
  - Rear view camera modules
  - Driver monitor camera modules
  - Power over coax (POC) camera modules
  - E-mirror camera modules
  - Front view camera modules

3 Description

The TPS650352-Q1 device is a highly integrated power management IC for automotive camera modules. This device combines three step down converters and one low-dropout (LDO) regulator. The BUCK1 step-down converter has an input voltage range up to 18.3V for connections to Power over Coax (PoC). All converters operate in a forced fixed-frequency PWM mode. The LDO can supply 300mA and operate with an input voltage range from 2.5V to 5.5V. The step-down converters and the LDO have separate voltage inputs that enable maximum design and sequencing flexibility.

The TPS650352-Q1 is available in a 22-pin WQFN package (3.0mm × 3.5mm).

Package Information

PART NUMBER	PACKAGE(1)	BODY SIZE (NOM)
TPS650352-Q1	WQFN (22)	3.00mm × 3.50mm

(1) For all available packages, see the orderable addendum at the end of the data sheet.

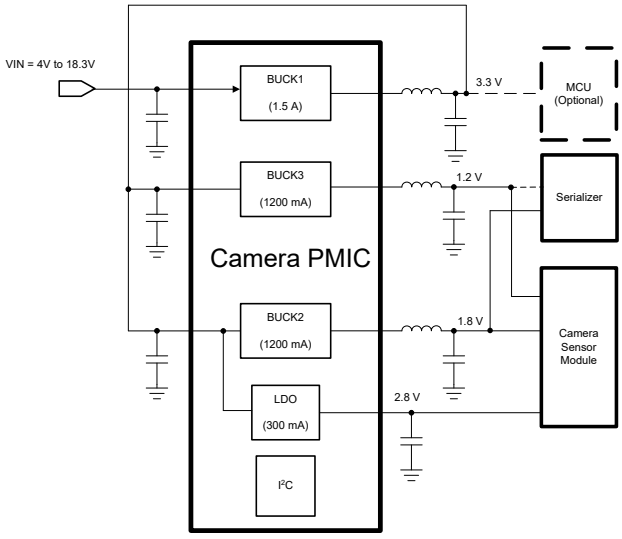

TPS650352-Q1 Application Circuit

An IMPORTANT NOTICE at the end of this data sheet addresses availability, warranty, changes, use in safety-critical applications, intellectual property matters and other important disclaimers. PRODUCTION DATA.

4 Device and Documentation Support

4.1 Device Support

4.1.1 Third-Party Products Disclaimer

TI'S PUBLICATION OF INFORMATION REGARDING THIRD-PARTY PRODUCTS OR SERVICES DOES NOT CONSTITUTE AN ENDORSEMENT REGARDING THE SUITABILITY OF SUCH PRODUCTS OR SERVICES OR A WARRANTY, REPRESENTATION OR ENDORSEMENT OF SUCH PRODUCTS OR SERVICES, EITHER ALONE OR IN COMBINATION WITH ANY TI PRODUCT OR SERVICE.

4.2 Receiving Notification of Documentation Updates

To receive notification of documentation updates, navigate to the device product folder on ti.com. Click on *Notifications* to register and receive a weekly digest of any product information that has changed. For change details, review the revision history included in any revised document.

4.3 Support Resources

TI E2E™ support forums are an engineer's go-to source for fast, verified answers and design help — straight from the experts. Search existing answers or ask your own question to get the quick design help you need.

Linked content is provided "AS IS" by the respective contributors. They do not constitute TI specifications and do not necessarily reflect TI's views; see TI's Terms of Use.

4.4 Trademarks

TI E2E™ is a trademark of Texas Instruments.
All trademarks are the property of their respective owners.

4.5 Electrostatic Discharge Caution



This integrated circuit can be damaged by ESD. Texas Instruments recommends that all integrated circuits be handled with appropriate precautions. Failure to observe proper handling and installation procedures can cause damage.

ESD damage can range from subtle performance degradation to complete device failure. Precision integrated circuits may be more susceptible to damage because very small parametric changes could cause the device not to meet its published specifications.

4.6 Glossary

TI Glossary	This glossary lists and explains terms, acronyms, and definitions.

5 Revision History

NOTE: Page numbers for previous revisions may differ from page numbers in the current version.

DATE	REVISION	NOTES
November 2024	*	Initial Release

Copyright © 2024 Texas Instruments Incorporated

6 Mechanical, Packaging, and Orderable Information

The following pages include mechanical, packaging, and orderable information. This information is the most current data available for the designated devices. This data is subject to change without notice and revision of this document. For browser-based versions of this data sheet, refer to the left-hand navigation.

Copyright © 2024 Texas Instruments Incorporated

PACKAGING INFORMATION

Orderable part number	Status (1)	Material type (2)	Package | Pins	Package qty | Carrier	RoHS (3)	Lead finish/ Ball material (4)	MSL rating/ Peak reflow (5)	Op temp (°C)	Part marking (6)
TPS65035200RZDRQ1	Active	Production	WQFN-FCRLF (RZD) | 22	3000 | LARGE T&R	Yes	NIPDAU	Level-3-260C-168 HR	-40 to 125	O35200
TPS65035201RZDRQ1	Active	Production	WQFN-FCRLF (RZD) | 22	3000 | LARGE T&R	Yes	NIPDAU	Level-3-260C-168 HR	-	O35201
TPS65035202RZDRQ1	Active	Production	WQFN-FCRLF (RZD) | 22	3000 | LARGE T&R	Yes	NIPDAU	Level-3-260C-168 HR	-	O35202
TPS6503520ARZDRQ1	Active	Production	WQFN-FCRLF (RZD) | 22	3000 | LARGE T&R	Yes	NIPDAU	Level-3-260C-168 HR	-	O3520A
TPS6503520FRZDRQ1	Active	Production	WQFN-FCRLF (RZD) | 22	3000 | LARGE T&R	Yes	NIPDAU	Level-3-260C-168 HR	-	O3520F
TPS6503520HRZDRQ1	Active	Production	WQFN-FCRLF (RZD) | 22	3000 | LARGE T&R	Yes	NIPDAU	Level-3-260C-168 HR	-	O3520H
TPS6503520LRZDRQ1	Active	Production	WQFN-FCRLF (RZD) | 22	3000 | LARGE T&R	Yes	NIPDAU	Level-3-260C-168 HR	-40 to 125	O3520L
TPS6503520LRZDRQ1.A	Active	Production	WQFN-FCRLF (RZD) | 22	3000 | LARGE T&R	Yes	NIPDAU	Level-3-260C-168 HR	See TPS6503520LRZDRQ1	O3520L
TPS6503520PRZDRQ1	Active	Production	WQFN-FCRLF (RZD) | 22	3000 | LARGE T&R	Yes	NIPDAU	Level-3-260C-168 HR	-	O3520P
TPS65035218RZDRQ1	Active	Production	WQFN-FCRLF (RZD) | 22	3000 | LARGE T&R	Yes	NIPDAU	Level-3-260C-168 HR	-	O35218

(1) **Status:** For more details on status, see our product life cycle.

(2) **Material type:** When designated, preproduction parts are prototypes/experimental devices, and are not yet approved or released for full production. Testing and final process, including without limitation quality assurance, reliability performance testing, and/or process qualification, may not yet be complete, and this item is subject to further changes or possible discontinuation. If available for ordering, purchases will be subject to an additional waiver at checkout, and are intended for early internal evaluation purposes only. These items are sold without warranties of any kind.

(3) **RoHS values:** Yes, No, RoHS Exempt. See the TI RoHS Statement for additional information and value definition.

(4) **Lead finish/Ball material:** Parts may have multiple material finish options. Finish options are separated by a vertical ruled line. Lead finish/Ball material values may wrap to two lines if the finish value exceeds the maximum column width.

(5) **MSL rating/Peak reflow:** The moisture sensitivity level ratings and peak solder (reflow) temperatures. In the event that a part has multiple moisture sensitivity ratings, only the lowest level per JEDEC standards is shown. Refer to the shipping label for the actual reflow temperature that will be used to mount the part to the printed circuit board.

(6) **Part marking:** There may be an additional marking, which relates to the logo, the lot trace code information, or the environmental category of the part.

Multiple part markings will be inside parentheses. Only one part marking contained in parentheses and separated by a "~" will appear on a part. If a line is indented then it is a continuation of the previous line and the two combined represent the entire part marking for that device.

Important Information and Disclaimer: The information provided on this page represents TI's knowledge and belief as of the date that it is provided. TI bases its knowledge and belief on information provided by third parties, and makes no representation or warranty as to the accuracy of such information. Efforts are underway to better integrate information from third parties. TI has taken and continues to take reasonable steps to provide representative and accurate information but may not have conducted destructive testing or chemical analysis on incoming materials and chemicals. TI and TI suppliers consider certain information to be proprietary, and thus CAS numbers and other limited information may not be available for release.

In no event shall TI's liability arising out of such information exceed the total purchase price of the TI part(s) at issue in this document sold by TI to Customer on an annual basis.

TAPE AND REEL INFORMATION

REEL DIMENSIONS

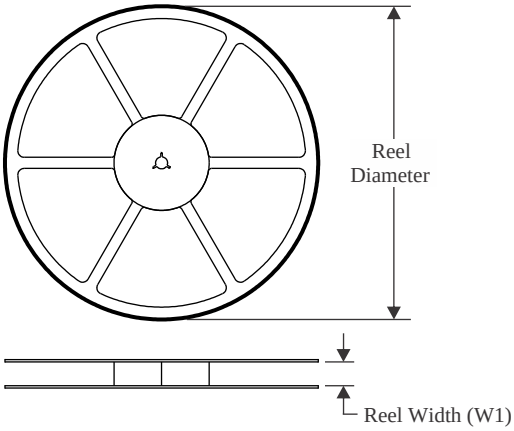

TAPE DIMENSIONS

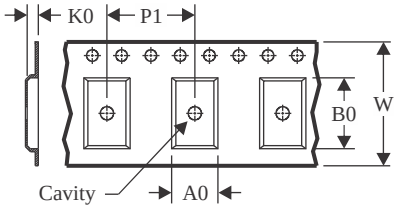

A0	Dimension designed to accommodate the component width
B0	Dimension designed to accommodate the component length
K0	Dimension designed to accommodate the component thickness
W	Overall width of the carrier tape
P1	Pitch between successive cavity centers

QUADRANT ASSIGNMENTS FOR PIN 1 ORIENTATION IN TAPE

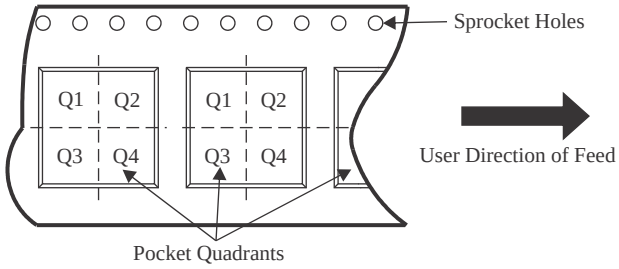

*All dimensions are nominal

Device	Package Type	Package Drawing	Pins	SPQ	Reel Diameter (mm)	Reel Width W1 (mm)	A0 (mm)	B0 (mm)	K0 (mm)	P1 (mm)	W (mm)	Pin1 Quadrant
TPS65035200RZDRQ1	WQFN-FCRLF	RZD	22	3000	330.0	12.4	3.3	3.8	1.2	8.0	12.0	Q1
TPS65035201RZDRQ1	WQFN-FCRLF	RZD	22	3000	330.0	12.4	3.3	3.8	1.2	8.0	12.0	Q1
TPS65035202RZDRQ1	WQFN-FCRLF	RZD	22	3000	330.0	12.4	3.3	3.8	1.2	8.0	12.0	Q1
TPS6503520ARZDRQ1	WQFN-FCRLF	RZD	22	3000	330.0	12.4	3.3	3.8	1.2	8.0	12.0	Q1
TPS6503520FRZDRQ1	WQFN-FCRLF	RZD	22	3000	330.0	12.4	3.3	3.8	1.2	8.0	12.0	Q1
TPS6503520HRZDRQ1	WQFN-FCRLF	RZD	22	3000	330.0	12.4	3.3	3.8	1.2	8.0	12.0	Q1
TPS6503520LRZDRQ1	WQFN-FCRLF	RZD	22	3000	330.0	12.4	3.3	3.8	1.2	8.0	12.0	Q1
TPS6503520PRZDRQ1	WQFN-FCRLF	RZD	22	3000	330.0	12.4	3.3	3.8	1.2	8.0	12.0	Q1
TPS65035218RZDRQ1	WQFN-FCRLF	RZD	22	3000	330.0	12.4	3.3	3.8	1.2	8.0	12.0	Q1

TAPE AND REEL BOX DIMENSIONS

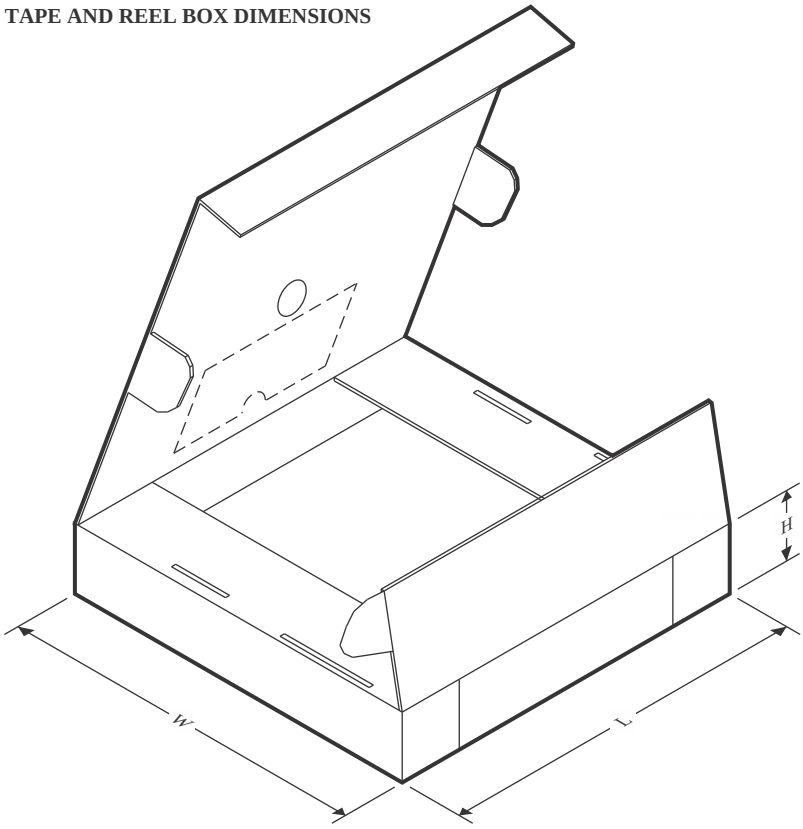

*All dimensions are nominal

Device	Package Type	Package Drawing	Pins	SPQ	Length (mm)	Width (mm)	Height (mm)
TPS65035200RZDRQ1	WQFN-FCRLF	RZD	22	3000	367.0	367.0	35.0
TPS65035201RZDRQ1	WQFN-FCRLF	RZD	22	3000	367.0	367.0	35.0
TPS65035202RZDRQ1	WQFN-FCRLF	RZD	22	3000	367.0	367.0	35.0
TPS6503520ARZDRQ1	WQFN-FCRLF	RZD	22	3000	367.0	367.0	35.0
TPS6503520FRZDRQ1	WQFN-FCRLF	RZD	22	3000	367.0	367.0	35.0
TPS6503520HRZDRQ1	WQFN-FCRLF	RZD	22	3000	367.0	367.0	35.0
TPS6503520LRZDRQ1	WQFN-FCRLF	RZD	22	3000	367.0	367.0	35.0
TPS6503520PRZDRQ1	WQFN-FCRLF	RZD	22	3000	367.0	367.0	35.0
TPS65035218RZDRQ1	WQFN-FCRLF	RZD	22	3000	367.0	367.0	35.0

PACKAGE OUTLINE

RZD0022A

WQFN-FCRLF - 0.7 mm max height

PLASTIC QUAD FLATPACK - NO LEAD

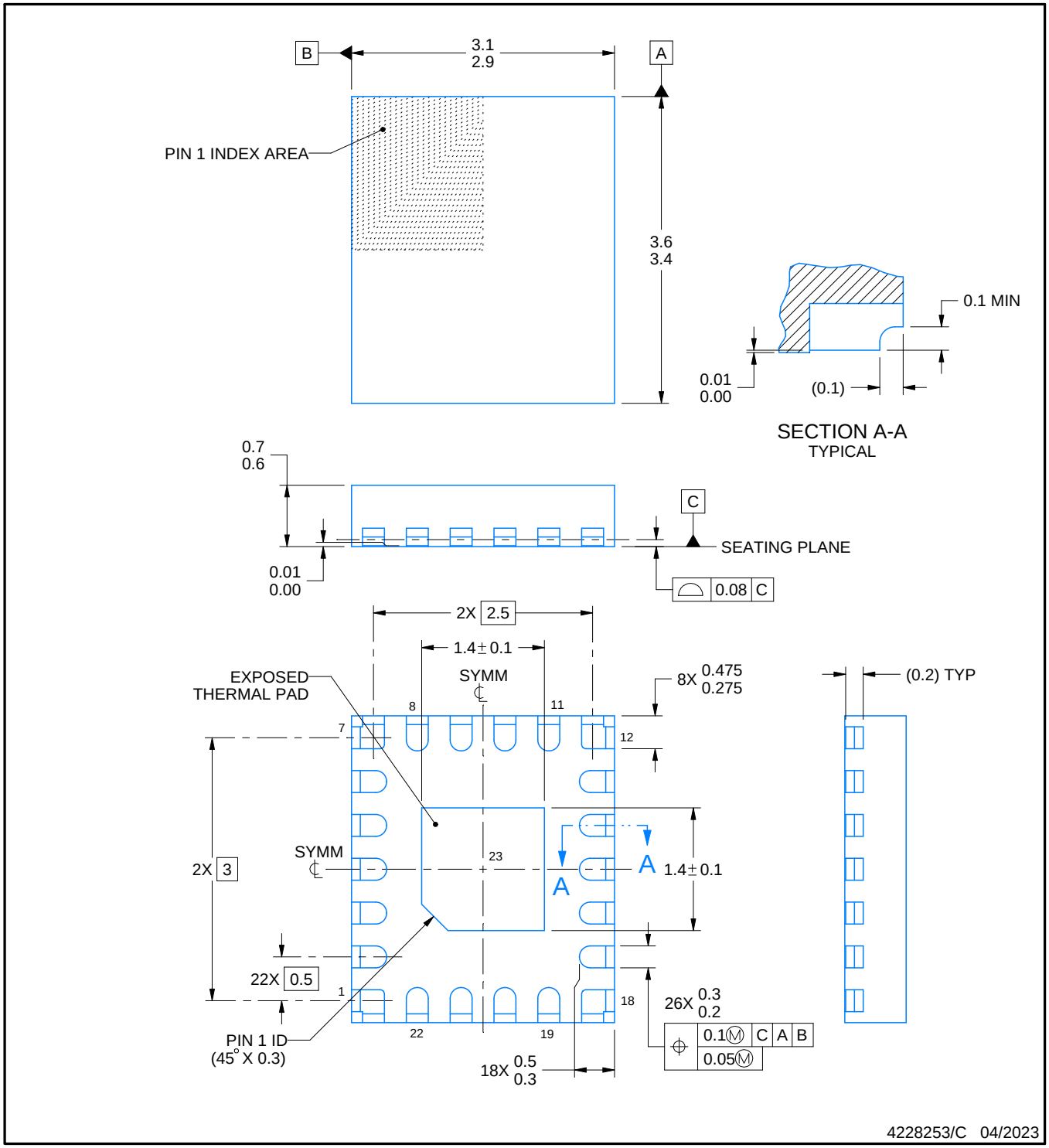

NOTES:

1. All linear dimensions are in millimeters. Any dimensions in parenthesis are for reference only. Dimensioning and tolerancing per ASME Y14.5M.
2. This drawing is subject to change without notice.
3. The package thermal pad must be soldered to the printed circuit board for thermal and mechanical performance.

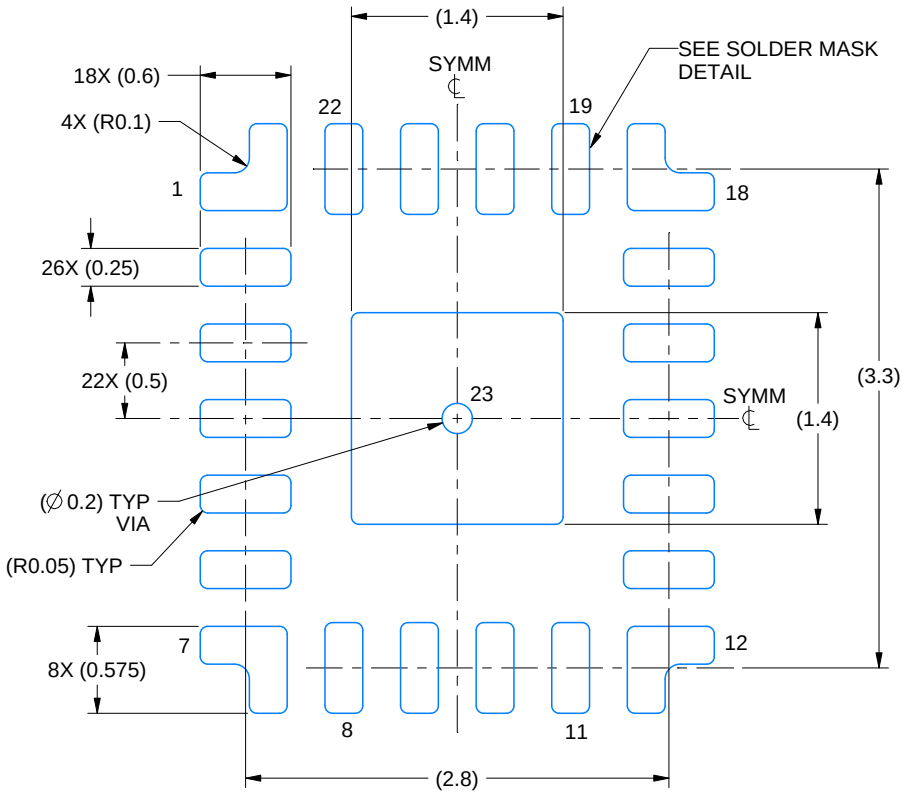

LAND PATTERN EXAMPLE
EXPOSED METAL SHOWN
SCALE: 20X

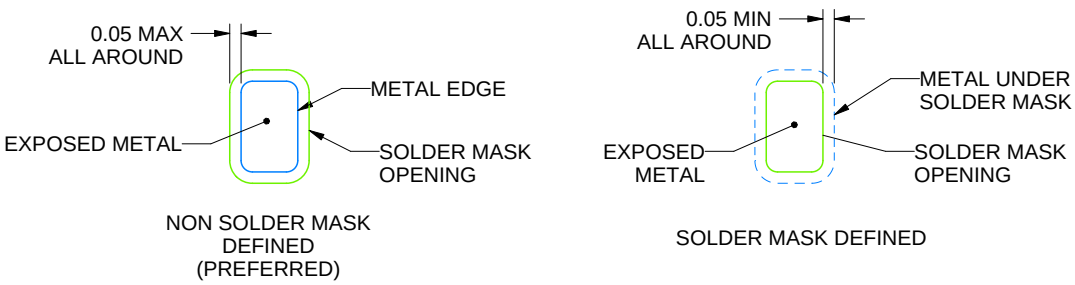

SOLDER MASK DETAILS

4228253/C 04/2023

NOTES: (continued)

4. This package is designed to be soldered to a thermal pad on the board. For more information, see Texas Instruments literature number SLUA271 (www.ti.com/lit/slua271).
5. Vias are optional depending on application, refer to device data sheet. If any vias are implemented, refer to their locations shown on this view. It is recommended that vias under paste be filled, plugged or tented.

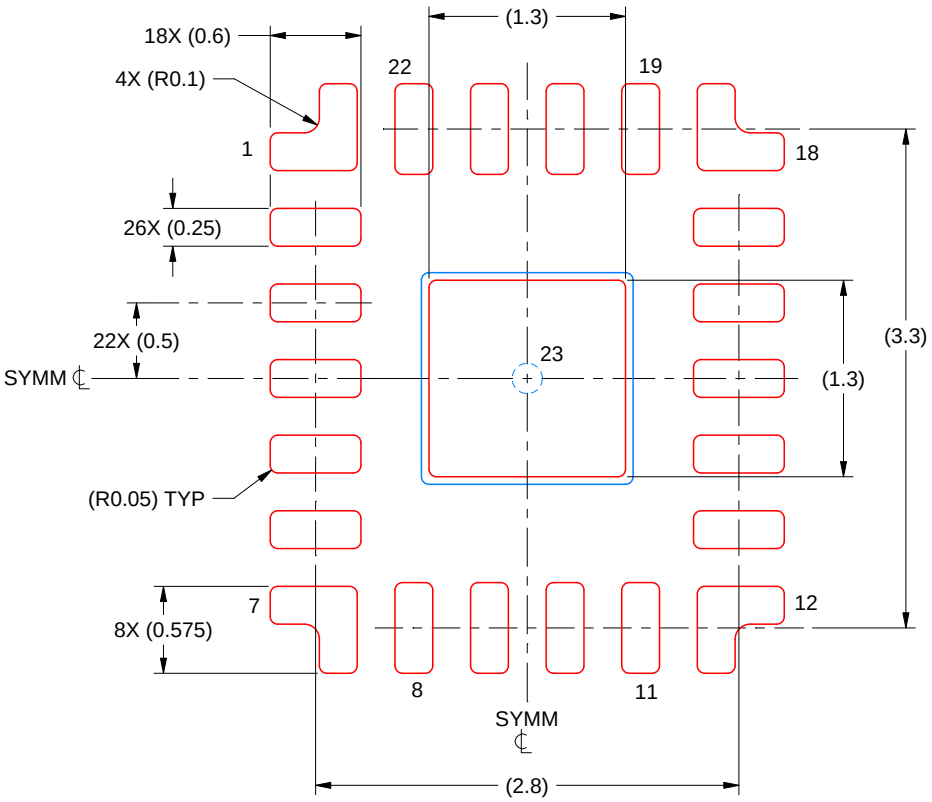

SOLDER PASTE EXAMPLE
BASED ON 0.125 MM THICK STENCIL
SCALE: 20X

EXPOSED PAD 19
86% PRINTED SOLDER COVERAGE BY AREA UNDER PACKAGE

4228253/C 04/2023

NOTES: (continued)

6. Laser cutting apertures with trapezoidal walls and rounded corners may offer better paste release. IPC-7525 may have alternate design recommendations.

IMPORTANT NOTICE AND DISCLAIMER

TI PROVIDES TECHNICAL AND RELIABILITY DATA (INCLUDING DATASHEETS), DESIGN RESOURCES (INCLUDING REFERENCE DESIGNS), APPLICATION OR OTHER DESIGN ADVICE, WEB TOOLS, SAFETY INFORMATION, AND OTHER RESOURCES “AS IS” AND WITH ALL FAULTS, AND DISCLAIMS ALL WARRANTIES, EXPRESS AND IMPLIED, INCLUDING WITHOUT LIMITATION ANY IMPLIED WARRANTIES OF MERCHANTABILITY, FITNESS FOR A PARTICULAR PURPOSE OR NON-INFRINGEMENT OF THIRD PARTY INTELLECTUAL PROPERTY RIGHTS.

These resources are intended for skilled developers designing with TI products. You are solely responsible for (1) selecting the appropriate TI products for your application, (2) designing, validating and testing your application, and (3) ensuring your application meets applicable standards, and any other safety, security, regulatory or other requirements.

These resources are subject to change without notice. TI grants you permission to use these resources only for development of an application that uses the TI products described in the resource. Other reproduction and display of these resources is prohibited. No license is granted to any other TI intellectual property right or to any third party intellectual property right. TI disclaims responsibility for, and you fully indemnify TI and its representatives against any claims, damages, costs, losses, and liabilities arising out of your use of these resources.

TI’s products are provided subject to TI’s Terms of Sale, TI’s General Quality Guidelines, or other applicable terms available either on ti.com or provided in conjunction with such TI products. TI’s provision of these resources does not expand or otherwise alter TI’s applicable warranties or warranty disclaimers for TI products. Unless TI explicitly designates a product as custom or customer-specified, TI products are standard, catalog, general purpose devices.

TI objects to and rejects any additional or different terms you may propose.

Copyright © 2026, Texas Instruments Incorporated

Last updated 10/2025