TPS7H502x-SP/SEP and TPS7H503x-SP/SEP Radiation-Hardened Current Mode PWM Controllers With Integrated Gate Driver

1 Features

- Radiation performance:
  - Radiation hardness assurance (RHA) up to total ionizing dose (TID) of 100krad(Si)
  - Single-event latchup (SEL), single-event burnout (SEB) and single-event gate rupture (SEGR) immune to LET = 75MeV-cm^2/mg
  - Single-event transient (SET) and single-event functional interrupt (SEFI) characterized up to LET = 75MeV-cm^2/mg
- 14V maximum input voltage for both controller and driver stages
- Dedicated gate driver voltage input pin (PVIN) allows for driving both silicon and GaN devices
  - 1.2A peak source and sink capability at 12V
  - Optional connection of VLDO linear regulator output to PVIN for driving GaN (TPS7H502x)
  - Programmable linear regulator (VLDO) from 4.5V to 5.5V (TPS7H502x)
- 0.6V ±1% voltage reference over temperature, radiation, and line and load regulation
- Switching frequency from 100kHz to 1MHz (TPS7H502x) or 100kHz to 500kHz (TPS7H503x)
- External clock synchronization capability
- Adjustable slope compensation and soft start
- Plastic packages outgas tested per ASTM E595
- Available in military temperature range (–55°C to 125°C)

2 Applications

- Space satellite power supplies
- Communications payload
- Radar imaging payload
- Satellite electrical power system

3 Description

The TPS7H502x and TPS7H503x are a radiation-hardened, current mode, single-ended PWM controller with integrated gate drivers. The TPS7H502x can be utilized in both silicon and gallium nitride (GaN) power semiconductor based converter designs, while TPS7H503x is targeted toward silicon based converters. The controllers integrates several key functions, such as soft-start, enable, and adjustable slope compensation while maintaining a small package size. The controllers also feature a 0.6V ±1% voltage reference tolerance to support highly accurate power converter designs.

The TPS7H502x and TPS7H503x can be operated using an external clock through the SYNC pin or by programming the internal oscillator using the RT pin at a frequency determined by the user. The TPS7H502x device is capable of switching at frequencies up to 1MHz, while the TPS7H503x supports up to 500kHz operation. The driver stages for the controllers have a wide input voltage range and supports peak source and sink currents up to 1.2A. The TPS7H502x has a programmable regulator, VLDO, which can also be connected directly to the input of the driver stage (PVIN) to supply well-controlled gate voltage for operation with GaN FETs. The programmable regulator has a voltage range from 4.5V to 5.5V. The TPS7H5020 and TPS7H5030 devices have a maximum duty cycle of 100% while the TPS7H5021 and TPS7H5031 have a 50% maximum duty cycle. The controllers support numerous power converter topologies, including flyback, forward, and boost.

Package Information

PART NUMBER(1)	GRADE	BODY SIZE(2)
5962R2420101PYE	QMLP-RHA	24-pin plastic 4.40mm × 7.80mm Mass = 100.6mg
5962R2420102PYE		
5962R2420103PYE		
5962R2420104PYE		
TPS7H5020MPWPTSEP	SEP	
TPS7H5021MPWPTSEP		
TPS7H5030MPWPTSEP		
TPS7H5031MPWPTSEP		

(1) For additional information, view the Device Comparison Table table.
(2) The mass is a nominal value and the body size (length × width) is a nominal value and does not include pins.

An IMPORTANT NOTICE at the end of this data sheet addresses availability, warranty, changes, use in safety-critical applications, intellectual property matters and other important disclaimers. PRODUCTION DATA.

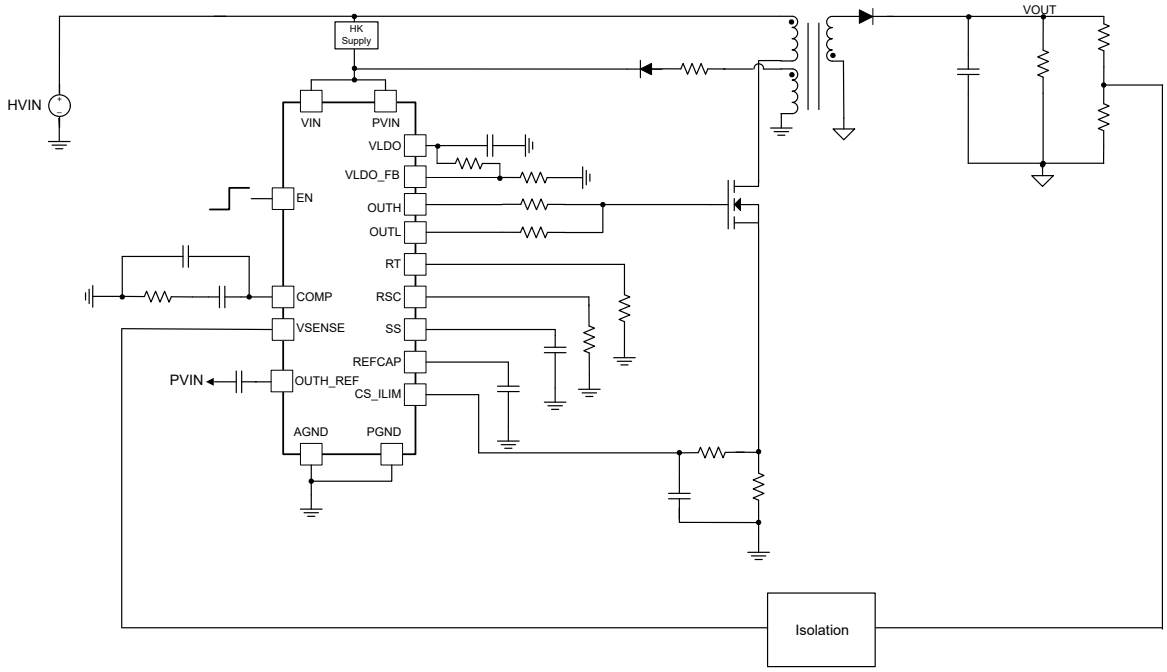

Typical Application Circuit for TPS7H502x

Copyright © 2026 Texas Instruments Incorporated

Table of Contents

1 Features....1
2 Applications....1
3 Description....1
4 Device Comparison Tables....4
5 Pin Configuration and Functions....5
6 Specifications....8
6.1 Absolute Maximum Ratings....8
6.2 ESD Ratings....8
6.3 Recommended Operating Conditions....9
6.4 Thermal Information....9
6.5 Electrical Characteristics....10
6.6 Quality Conformance Inspection....14
6.7 Typical Characteristics....15
7 Detailed Description....25
7.1 Overview....25
7.2 Functional Block Diagram....26
7.3 Feature Description....28
7.4 Device Functional Modes....44
8 Application and Implementation....46
8.1 Application Information....46
8.2 Typical Application....46
8.3 Power Supply Recommendations....55
8.4 Layout....56
9 Device and Documentation Support....59
9.1 Documentation Support....59
9.2 Receiving Notification of Documentation Updates....59
9.3 Support Resources....59
9.4 Trademarks....59
9.5 Electrostatic Discharge Caution....59
9.6 Glossary....59
10 Revision History....59
11 Mechanical, Packaging, and Orderable Information....61

4 Device Comparison Tables

GENERIC PART NUMBER	RADIATION RATING	GRADE[(1)]	PACKAGE	ORDERABLE PART NUMBER
TPS7H5020-SP	TID of 100krad(Si) RLAT, DSEE free up to LET = 75MeV-cm^2/mg	QMLP-RHA	24-pin HTSSOP PWP	5962R2420101PYE
TPS7H5020-SEP	TID of 50krad(Si) RLAT, DSEE free up to LET = 43MeV-cm^2/mg	Space Enhanced Plastic	24-pin HTSSOP PWP	TPS7H5020MPWPTSEP
TPS7H5021-SP	TID of 100krad(Si) RLAT, DSEE free up to LET = 75MeV-cm^2/mg	QMLP-RHA	24-pin HTSSOP PWP	5962R2420102PYE
TPS7H5021-SEP	TID of 50krad (Si) RLAT, DSEE free up to LET = 43MeV-cm^2/mg	Space Enhanced Plastic	24-pin HTSSOP PWP	TPS7H5021MPWPTSEP
TPS7H5030-SP	TID of 100krad(Si) RLAT, DSEE free up to LET = 75MeV-cm^2/mg	QMLP-RHA	24-pin HTSSOP PWP	5962R2420103PYE
TPS7H5030-SEP	TID of 50krad(Si) RLAT, DSEE free up to LET = 43MeV-cm^2/mg	Space Enhanced Plastic	24-pin HTSSOP PWP	TPS7H5030MPWPTSEP
TPS7H5031-SP	TID of 100krad(Si) RLAT, DSEE free up to LET = 75MeV-cm^2/mg	QMLP-RHA	24-pin HTSSOP PWP	5962R2420104PYE
TPS7H5031-SEP	TID of 50krad (Si) RLAT, DSEE free up to LET = 43MeV-cm^2/mg	Space Enhanced Plastic	24-pin HTSSOP PWP	TPS7H5031MPWPTSEP

(1) For additional information about the part grade, view part ratings.

GENERIC PART NUMBER	INPUT VOLTAGE RANGE	DUTY CYCLE LIMIT (NOMINAL)	MAXIMUM SWITCHING FREQUENCY (NOMINAL)	PROGRAMMABLE VLDO OUTPUT
TPS7H5020-SP	4.5V to 14V	100%	1MHz	Yes
TPS7H5020-SEP	4.5V to 14V	100%	1MHz	Yes
TPS7H5021-SP	4.5V to 14V	50%	1MHz	Yes
TPS7H5021-SEP	4.5V to 14V	50%	1MHz	Yes
TPS7H5030-SP	8V to 14V	100%	500kHz	No
TPS7H5030-SEP	8V to 14V	100%	500kHz	No
TPS7H5031-SP	8V to 14V	50%	500kHz	No
TPS7H5031-SEP	8V to 14V	50%	500kHz	No

Copyright © 2026 Texas Instruments Incorporated

5 Pin Configuration and Functions

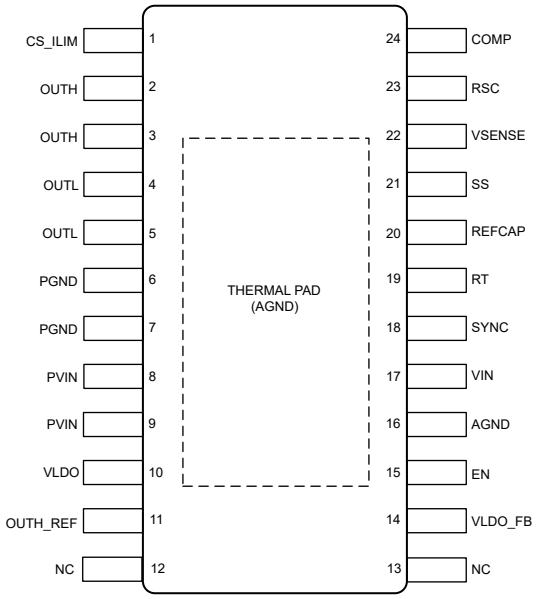

Figure 5-1. TPS7H502x PWP Package 24-Pin HTSSOP With Thermal Pad (Top View)

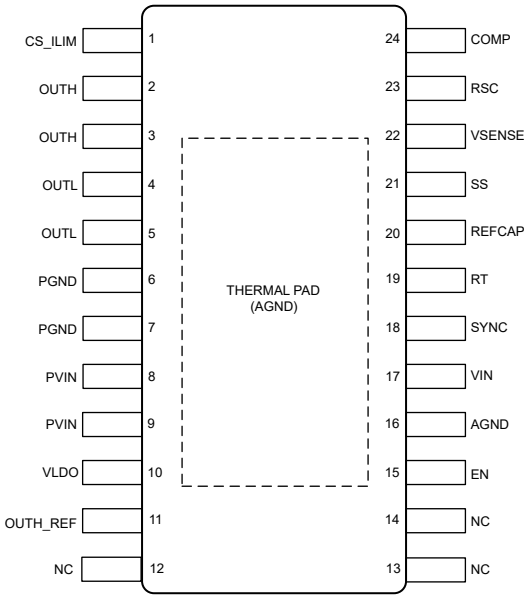

Figure 5-2. TPS7H503x PWP Package 24-Pin HTSSOP With Thermal Pad (Top View)

Table 5-1. Pin Functions

PIN			TYPE[1]	DESCRIPTION
NAME	HTSSOP (TPS7H502x)	HTSSOP (TPS7H503x)		
AGND	16	16	—	Ground. Return for the controller circuitry. Connect to PGND at printed circuit board level.
COMP	24	24	I/O	Error amplifier output. The output is divided down by a factor CCSR and this scaled voltage is the input to the PWM comparator. Connect frequency compensation to this pin.
CS_ILIM	1	1	I	Current sense for PWM control and cycle-by-cycle overcurrent protection. An input voltage over 1V on CS_ILIM triggers an overcurrent in the PWM controller. The sensed waveform on CS_ILIM contains a 150mV offset when compared to the COMP/CCSR voltage at the input of the PWM comparator.
EN	15	15	I	Enable. Connecting the EN pin to a voltage greater than 0.6V enables the device. In addition, input undervoltage lockout (UVLO) can be adjusted by the user with a resistor divider from VIN to GND.
NC	12, 13	12, 13, 14	—	No connect. This pin is not internally connected. These pins can be connected to GND to prevent charge buildup.
OUTH	2, 3	2, 3	O	Driver stage source current output. Connect to the gate of the power transistor using a short, low-inductance path. A resistor between OUTH and the gate of the transistor can be used to adjust the turn-on speed.

Table 5-1. Pin Functions (continued)

PIN			TYPE[1]	DESCRIPTION
NAME	HTSSOP (TPS7H502x)	HTSSOP (TPS7H503x)		
OUTH_REF	11	11	O	OUTH driver stage return. The voltage at OUTH_REF is nominally 6V less than the voltage present at PVIN. When the voltage at PVIN is 6V or greater, connect a 220nF capacitor between OUTH_REF and PVIN. This improves transient performance and minimizes potential radiation-induced single-event transients (SETs). For PVIN voltage less than 6V, connect OUTH_REF to PGND at the printed circuit board level. For TPS7H503x, a capacitor must always connected between OUTH_REF and PVIN since the minimum allowable PVIN voltage is 8V.
OUTL	4, 5	4, 5	O	Driver stage sink current output. Connect to the gate of the power transistor using a short, low-inductance path. A resistor between OUTL and the gate of the transistor can be used to adjust the turn-off speed.
PGND	6, 7	6, 7	—	Driver stage power ground. Connect to the source of the power transistor. Connect to AGND at the printed circuit board level.
PVIN	8, 9	8, 9	I	Driver stage voltage input. The voltage range of PVIN is from 4.5V to 14V for TPS7H502x and 8V to 14V for TPS7H503x. The voltage being supplied to the gate of the power transistor is approximately equal to the input voltage at PVIN. This pin can be connected to VIN for single-supply operation. For the TPS7H502x devices, PVIN can also be connected to VLDO to provide a regulated gate drive voltage, between 4.5V and 5.5V, to the power transistor gate.
REFCAP	20	20	O	1.2V internal reference output. Requires a 470nF external capacitor to AGND. Do not load with external circuitry.
RSC	23	23	I/O	Slope compensation programming for the controller. A resistor from RSC to AGND sets the desired slope compensation.
RT	19	19	I/O	Switching frequency programming for controller. Connect a resistor from RT to GND to set the switching frequency of the controller. If an external clock input is used, the resistor still must be connected and selected to match the external clock frequency.
SS	21	21	I/O	Soft start. An external capacitor connected to this pin sets the internal voltage reference rise time. Can be used for tracking and sequencing.
SYNC	18	18	I	External clock input. For TPS7H502x, SYNC accepts a 100kHz to 1MHz external clock. SYNC accepts a clock with frequency from 100kHz to 500kHz for TPSH503x. Use a duty cycle between 40% and 60% for the external clock. The switching frequency of the controller outputs are the same as the external clock frequency. RT must be populated such that the frequency set by the resistor coincides with the external clock frequency. If external synchronization is not planned to be used, SYNC can either be tied directly to VLDO or to GND through a 10kΩ resistor.
THERMAL PAD	—	—	—	Thermal pad. Internally connected to AGND. Connect to one or more ground planes on the printed circuit board for improved thermal dissipation.
VIN	17	17	I	Controller input voltage. The voltage range of VIN is from 4.5V to 14V for TPS7H502x and 8V to 14V for TPS7H503x. Powers internal control circuitry. Can be connected to PVIN for single-supply operation.

Copyright © 2026 Texas Instruments Incorporated

Table 5-1. Pin Functions (continued)

PIN			TYPE[1]	DESCRIPTION
NAME	HTSSOP (TPS7H502x)	HTSSOP (TPS7H503x)		
VLDO	10	10	O	Output of internal regulator. For the TPS7H502x devices, this output is programmable and can be connected to PVIN for regulated GaN compatible driver voltage. In TPS7H502x, it is able to be programmed from 4.5V to 5.5V using a resistor divider than consists of a resistor from VLDO to VLDO_FB and another from VLDO_FB to AGND. These resistors must always be populated for proper operation. For TPS7H503x devices, this is a fixed 5V output. Requires at least 1µF external capacitor to AGND.
VLDO_FB	14	—	I	VLDO feedback pin for TPS7H502x. Used to program the VLDO output voltage. Nominally set to 1.2V using resistor divider from VLDO to AGND. The resistor divider must always be populated for proper operation.
VSENSE	22	22	I	Inverting input of the error amplifier. Feedback pin that is nominally set to 0.6V using a resistor divider from the converter output.

(1) I = input, O = output, I/O = bidirectional

6 Specifications

6.1 Absolute Maximum Ratings

over operating temperature range (unless otherwise noted)[1]

	MIN	MAX	UNIT
VIN	–0.3	16	V
PVIN	–0.3	16	V
SYNC	–0.3	7.5	V
EN	–0.3	7.5	V
RT	–0.3	3.6	V
VSENSE	–0.3	3.6	V
SS	–0.3	3.3	V
RSC	–0.3	3.6	V
COMP[2]	–0.3	6.0	V
	–0.3	VLDO+0.3	
CS_ILIM	–0.3	7.5	V
OUTH[2]	–0.3	16	V
	–0.3	PVIN+0.3	
OUTL	–0.3	16	V
OUTH_REF	–0.3	10	V
VLDO[2]	–0.3	7.5	V
	–0.3	VIN+0.3	
VLDO_FB (TPS7H502x)	–0.3	1.9	V
REFCAP[2]	–0.3	1.9	V
	–0.3	VLDO+0.3	
Operating junction temperature	–55	150	°C
Storage temperature	–65	150	°C

(1) Operation outside the *Absolute Maximum Ratings* may cause permanent device damage. *Absolute Maximum Ratings* do not imply functional operation of the device at these or any other conditions beyond those listed under *Recommended Operating Conditions*. If used outside the *Recommended Operating Conditions* but within the *Absolute Maximum Ratings*, the device may not be fully functional, and this may affect device reliability, functionality, performance, and shorten the device lifetime.
(2) The absolute maximum voltage of the pin should adhere to the lower of the two presented conditions.

6.2 ESD Ratings

			VALUE	UNIT
$V_{(ESD)}$	Electrostatic discharge	Human body model (HBM), per ANSI/ESDA/JEDEC JS-001, all pins[1]	±1000	V
		Charged device model (CDM), per ANSI/ESDA/JEDEC JS-002, all pins[2]	±250	

(1) JEDEC document JEP155 states that 500V HBM allows safe manufacturing with a standard ESD control process.
(2) JEDEC document JEP157 states that 250V CDM allows safe manufacturing with a standard ESD control process.

Copyright © 2026 Texas Instruments Incorporated

6.3 Recommended Operating Conditions

over operating temperature range (unless otherwise noted)

	MIN	NOM	MAX	UNIT
VIN (TPS7H502x)	4.5		14	V
VIN (TPS7H503x)	8		14	V
PVIN (TPS7H502x)	4.5		14	V
PVIN (TPS7H503x)	8		14	V
SYNC	0		7	V
EN	0		7	V
COMP[(1)]	0		2.3	V
VSENSE	0	0.6	1	V
VLDO_FB (TPS7H502x)	0	1.2	1.3	V
SS	0		1.5	V
CS_ILIM	0		1.5	V
OUTH, OUTL	0		14	V
Input voltage slew rate (VIN)			0.03	V/µs
Input voltage slew rate (PVIN)			0.03	V/µs
Operating junction temperature	–55		125	°C

(1) See *Current Sense and PWM Generation* for additional details.

6.4 Thermal Information

THERMAL METRIC[(1)]		TP7H502x & TPS7H503x HTSSOP 24 PINS	UNIT
$R_{\theta JA}$	Junction-to-ambient thermal resistance	26.6	°C/W
$R_{\theta JC(bot)}$	Junction-to-case (bottom) thermal resistance	0.9	°C/W
$R_{\theta JB}$	Junction-to-board thermal resistance	7.7	°C/W
$R_{\theta JC(top)}$	Junction-to-case (top) thermal resistance	18.0	°C/W
ψ_{JT}	Junction-to-top characterization parameter	0.2	°C/W
ψ_{JB}	Junction-to-board characterization parameter	7.7	°C/W

(1) For more information about traditional and new thermal metrics, see the Semiconductor and IC Package Thermal Metrics application report.

6.5 Electrical Characteristics

T_A = –55°C to 125°C, PVIN = VIN = 4.5V to 14V for TPS7H502x, PVIN = VIN = 8V to 14V for TPS7H503x , VLDO = 5V, no load on OUT (unless otherwise noted)

PARAMETER		TEST CONDITIONS		SUBGROUP[1]	MIN	TYP	MAX	UNIT
SUPPLY VOLTAGES AND CURRENTS								
IDD	Operating supply current	No load for OUT, PVIN = VIN	f_{SW} = 100kHz	1, 2, 3		6.8	11	mA
			f_{SW} = 500kHz	1, 2, 3		8.5	17	
IDD	Operating supply current	No load for OUT, PVIN = VIN	f_{SW} = 1MHz (TPS7H502x)	1, 2, 3		10.3	25	mA
IDD	Operating supply current	C_{LOAD} = 1000pF for OUT, PVIN = VIN	f_{SW} = 100kHz	1, 2, 3		8.5	12	mA
			f_{SW} = 500kHz	1, 2, 3		14.5	22	
IDD	Operating supply current	C_{LOAD} = 1000pF for OUT, PVIN = VIN	f_{SW} = 1MHz (TPS7H502x)	1, 2, 3		22.5	28	mA
IDD	Operating supply current	C_{LOAD} = 1000pF for OUT, VIN = 12V, PVIN = VLDO = 5V	f_{SW} = 100kHz (TPS7H502x)	1, 2, 3		7	10	mA
			f_{SW} = 500kHz (TPS7H502x)	1, 2, 3		10	13	
			f_{SW} = 1MHz (TPS7H502x)	1, 2, 3		13.5	20	
I_{start}	Startup current (TPS7H502x)	VIN = 3.5V		1, 2, 3		3.8	5	mA
I_{start}	Startup current (TPS7H503x)	VIN = 6.5V		1, 2, 3		4.8	6	mA
$I_{DD(dis)}$	Standby current	EN = 0V		1, 2, 3			8	mA
VLDO	Internal linear regulator output voltage (TPS7H502x)	C_{VLDO} = 1µF	5V ≤ VIN ≤ 14V, RVT = 10kΩ, RVB = 3.74kΩ	1, 2, 3	4.36	4.49	4.62	V
			5.5V ≤ VIN ≤ 14V, RVT = 10kΩ, RVB = 3.24kΩ	1, 2, 3	4.84	4.99	5.14	
			6V ≤ VIN ≤ 14V, RVT = 10 kΩ, RVB = 2.87kΩ	1, 2, 3	5.31	5.48	5.65	
VLDO	Internal linear regulator output voltage (TPS7H503x)	C_{VLDO} = 1µF	8V ≤ VIN ≤ 14V	1, 2, 3	4.8	5	5.2	V
VLDO_DO	Internal linear dropout voltage (TPS7H502x)	I_{VLDO} = 25mA, C_{VLDO} = 1µF		1, 2, 3			0.4	V
VLDO_DO	Internal linear dropout voltage (TPS7H503x)	I_{VLDO} = 25mA, C_{VLDO} = 1µF		1, 2, 3			0.5	V
I_VLDO	Maximum VLDO output current (TPS7H502x)	VLDO ≥ 96% of VLDO at no load, C_{VLDO} = 1µF	VIN = VLDO + 0.5V	1, 2, 3	25[4]			mA
			VIN = VLDO + 1V	1, 2, 3	55[4]			
			VIN ≥ 7V	1, 2, 3	90[4]			
I_VLDO	VLDO output current (TPS7H503x)	VLDO ≥ 96% of VLDO at no load, C_{VLDO} = 1µF		1, 2, 3	100[4]			mA
ENABLE AND UNDERVOLTAGE LOCKOUT								
V_{ENR}	Enable rising threshold			1, 2, 3	0.57	0.63	0.66	V
V_{ENF}	Enable falling threshold			1, 2, 3	0.48	0.52	0.55	V
I_{EN}	Enable input leakage current	VIN = 14V	EN = 1V	1, 2, 3		1	100	nA
			EN = 7V	1, 2, 3		30	700	nA
$PVIN_{UVLOR}$	PVIN UVLO rising (TPS7H502x)			1, 2, 3	3.65	3.76	3.95	V

Copyright © 2026 Texas Instruments Incorporated

6.5 Electrical Characteristics (continued)

T_A = –55°C to 125°C, PVIN = VIN = 4.5V to 14V for TPS7H502x, PVIN = VIN = 8V to 14V for TPS7H503x , VLDO = 5V, no load on OUT (unless otherwise noted)

PARAMETER		TEST CONDITIONS		SUBGROUP[1]	MIN	TYP	MAX	UNIT
$PVIN_{UVLOF}$	PVIN UVLO falling (TPS7H502x)			1, 2, 3	3.45	3.56	3.75	V
VIN_{UVLOR}	VIN UVLO rising (TPS7H502x)			1, 2, 3	3.85	3.96	4.15	V
VIN_{UVLOF}	VIN UVLO falling (TPS7H502x)			1, 2, 3	3.65	3.76	3.95	V
$PVIN_{UVLOR}$	PVIN UVLO rising (TPS7H503x)			1, 2, 3	7.2	7.5	7.8	V
$PVIN_{UVLOF}$	PVIN UVLO falling (TPS7H503x)			1, 2, 3	6.9	7.2	7.5	V
VIN_{UVLOR}	VIN UVLO rising (TPS7H503x)			1, 2, 3	7.2	7.5	7.8	V
VIN_{UVLOF}	VIN UVLO falling (TPS7H503x)			1, 2, 3	6.9	7.2	7.5	V
$VLDO_{UVLOR}$	VLDO UVLO rising			1, 2, 3	3.65	3.77	3.95	V
$VLDO_{UVLOF}$	VLDO UVLO falling			1, 2, 3	3.45	3.59	3.75	V
SOFT START								
I_{SS}	Soft-start current	SS = 0.3V		1, 2, 3	2.0	2.8	3.4	µA
ERROR AMPLIFIER								
EA_{gm}	Error amplifier transconductance	–10µA < I_{COMP} < 10µA, $V_{(COMP)}$ = 1V		1, 2, 3	1100	1750	2700	µA/V
EA_{DC}	DC gain	V_{SENSE} = 0.6V				13000		V/V
EA_{ISRC}	Error amplifier source current	$V_{(COMP)}$ = 1V, 100mV input overdrive		1, 2, 3	95		210	µA
EA_{ISNK}	Error amplifier sink current	$V_{(COMP)}$ = 1V, 100mV input overdrive		1, 2, 3	95		210	µA
EA_{ro}	Error amplifier output resistance					8		MΩ
EA_{OS}	Error amplifier input offset voltage			1, 2, 3	–5		6	mV
EA_{IB}	Error amplifier input bias current			1, 2, 3			25	nA
EA_{BW}	Bandwidth			1, 2, 3		7.5		MHz
OSCILLATOR								
$SYNC_{IL}$	SYNC in low-level (TP7H502x)	VLDO = 4.5V	VIN < 5V	1, 2, 3			0.8	V
			VIN ≥ 5V	1, 2, 3			0.8	
		VLDO = 5.5V	VIN < 6V	1, 2, 3			0.8	
			VIN ≥ 6V	1, 2, 3			0.8	
$SYNC_{IL}$	SYNC in low-level (TPS7H503x)	VIN ≥ 8V		1, 2, 3			0.8	V
$SYNC_{IH}$	SYNC in high-level (TP7H502x)	VLDO = 4.5V	VIN < 5V	1, 2, 3	3.5			V
			VIN ≥ 5V	1, 2, 3	3.5			
		VLDO = 5.5V	VIN < 6V	1, 2, 3	3.5			
			VIN ≥ 6V	1, 2, 3	3.5			
$SYNC_{IH}$	SYNC in high-level (TPS7H503x)	VIN ≥ 8V		1, 2, 3	3.5			V
f_{SYNC}	SYNC in frequency range (TPS7H502x)			4, 5, 6	100		1000	kHz
f_{SYNC}	SYNC in frequency range (TPS7H503x)			4, 5, 6	100		500	kHz

Copyright © 2026 Texas Instruments Incorporated

6.5 Electrical Characteristics (continued)

T_A = –55°C to 125°C, PVIN = VIN = 4.5V to 14V for TPS7H502x, PVIN = VIN = 8V to 14V for TPS7H503x , VLDO = 5V, no load on OUT (unless otherwise noted)

PARAMETER		TEST CONDITIONS		SUBGROUP[1]	MIN	TYP	MAX	UNIT
D_{SYNC}	SYNC in duty cycle (TPS7H5020 & TPS7H5030)	Duty cycle of external clock		4, 5, 6	40%		60%	
D_{SYNC}	SYNC in duty cycle (TPS7H5021 & TPS7H5031)	Duty cycle of external clock, f ≥ 200kHz		4, 5, 6	48%		52%	
D_{SYNC}	SYNC in duty cycle (TPS7H5021 & TPS7H5031)	Duty cycle of external clock, 100kHz ≤ f < 200kHz		4, 5, 6	49%		51%	
DT_{INT}	External clock to internal clock detection time	RT populated		9, 10, 11		2	5	$(1/f_{sw})$ s
DT_{EXT}	Internal clock to external clock detection time	RT populated		9, 10, 11		2	5	$(1/f_{sw})$ s
f_{SW}	RT programmed switching frequency	RT = 1.18MΩ		4, 5, 6	80	95	110	kHz
		RT = 560kΩ		4, 5, 6	175	195	220	
		RT = 210kΩ		4, 5, 6	450	500	550	
f_{SW}	RT programmed switching frequency (TPS7H502x)	RT = 100kΩ		4, 5, 6	925	1000	1100	kHz
VOLTAGE REFERENCE								
VREF	Internal voltage reference[2]	Measured at COMP, COMP = VSENSE	T_A = 25°C	1	0.597	0.600	0.603	V
			T_A = –55°C	3	0.594	0.598	0.602	
			T_A = 125°C	2	0.597	0.601	0.604	
REFCAP	REFCAP voltage	C_{REFCAP} = 470nF		1, 2, 3	1.208	1.223	1.235	V
CURRENT SENSE								
CCSR	COMP to CS_ILIM ratio	RSC = open		1, 2, 3	1.94	2.0	2.06	
V_{CS_ILIM}	Current limit (overcurrent) threshold			1, 2, 3	0.96	1.0	1.04	V
	CS_ILIM to OUT delay	CS_ILIM = 1V to 90% of OUT falling		9, 10, 11		65	115	ns
SLOPE COMPENSATION								
SC	Slope compensation	f_{SW} = 100kHz, RSC = 1.18MΩ				0.029		V/µs
		f_{SW} = 200kHz, RSC = 562kΩ				0.072		
		f_{SW} = 500kHz, RSC = 100kΩ				0.306		
SC	Slope compensation (TPS7H502x)	f_{SW} = 1000kHz, RSC = 49.9kΩ				0.605		V/µs
THERMAL SHUTDOWN								
T_{SD}	Thermal shutdown entry					185		°C
T_{SD_HYS}	Thermal shutdown hysteresis					15		°C
GATE DRIVER								
V_{OL}	Low-level voltage	I_{OL} = 50mA		1, 2, 3		0.08	0.15	V
PVIN - V_{OH}	High-level voltage	I_{OH} = 50mA		1, 2, 3		0.13	0.25	V
t_{R_OUT}	OUT rise time (TPS7H502x)	C_{LOAD} = 1000pF, 10% to 90%	VIN = PVIN = 4.5V	9, 10, 11		7	14	ns
			VIN = PVIN = 5V	9, 10, 11		7	14	
t_{R_OUT}	OUT rise time (TPS7H503x)	C_{LOAD} = 1000pF, 10% to 90%	VIN = PVIN = 8V	9, 10, 11		9.5	18	ns
t_{R_OUT}	OUT rise time	C_{LOAD} = 1000pF, 10% to 90%	VIN = PVIN = 12V	9, 10, 11		9.5	18	ns
			VIN = PVIN = 14V	9, 10, 11		11.5	20	

Copyright © 2026 Texas Instruments Incorporated

6.5 Electrical Characteristics (continued)

T_A = –55°C to 125°C, PVIN = VIN = 4.5V to 14V for TPS7H502x, PVIN = VIN = 8V to 14V for TPS7H503x , VLDO = 5V, no load on OUT (unless otherwise noted)

PARAMETER		TEST CONDITIONS		SUBGROUP[1]	MIN	TYP	MAX	UNIT
t_{R_OUT}	OUT rise time (TPS7H502x)	C_{LOAD} = 1000pF, 10% to 90%	VIN = 12V, PVIN = VLDO	9, 10, 11		8.5	16	ns
		C_{LOAD} = 220pF, 10% to 90%		9, 10, 11		4.5	12	
t_{F_OUT}	OUT fall time (TPS7H502x)	C_{LOAD} = 1000pF, 90% to 10%	VIN = PVIN = 4.5V	9, 10, 11		6.5	14	ns
			VIN = PVIN = 5V	9, 10, 11		6.5	14	
t_{F_OUT}	OUT fall time (TPS7H503x)	C_{LOAD} = 1000pF, 90% to 10%	VIN = PVIN = 8V	9, 10, 11		9.5	18	ns
t_{F_OUT}	OUT fall time	C_{LOAD} = 1000pF, 90% to 10%	VIN = PVIN = 12V	9, 10, 11		9.5	18	ns
			VIN = PVIN = 14V	9, 10, 11		11	18	
t_{F_OUT}	OUT fall time (TPS7H502x)	C_{LOAD} = 1000pF, 90% to 10%	VIN = 12V, PVIN = VLDO	9, 10, 11		6.5	14	ns
		C_{LOAD} = 220pF, 90% to 10%		9, 10, 11		3.5	10	
I_{OH}	Peak source current (TPS7H502x)	PVIN = 4.5V		1, 2, 3		0.55		A
		PVIN = 5V		1, 2, 3		0.7		
I_{OH}	Peak source current (TPS7H503x)	PVIN = 8V		1, 2, 3		1.2		A
I_{OH}	Peak source current	PVIN = 12V		1, 2, 3		1.2		A
		PVIN = 14V		1, 2, 3		1.2		
I_{OH}	Peak source current (TPS7H502x)	VIN = 12V, PVIN = VLDO	VLDO = 4.5V	1, 2, 3		0.55		A
			VLDO = 5V	1, 2, 3		0.7		
			VLDO = 5.5V	1, 2, 3		0.85		
I_{OL}	Peak sink current (TPS7H502x)	PVIN = 4.5V		1, 2, 3		0.7		A
		PVIN = 5V		1, 2, 3		0.8		
I_{OL}	Peak sink current (TPS7H503x)	PVIN = 8V		1, 2, 3		1.3		A
I_{OL}	Peak sink current	PVIN = 12V		1, 2, 3		1.3		A
		PVIN = 14V		1, 2, 3		1.3		
I_{OL}	Peak sink current (TPS7H502x)	VIN = 12V, PVIN = VLDO	VLDO = 4.5V	1, 2, 3		1.05		A
			VLDO = 5V	1, 2, 3		1.3		
			VLDO = 5.5V	1, 2, 3		1.55		
R_{OH}	Pull-up resistance	100mA from OUT		1, 2, 3		2.6	4.7	Ω
R_{OL}	Pull-down resistance	100mA into OUT		1, 2, 3		1.6	2.8	Ω
V_{UCLAMP}	Unpowered OUT clamp voltage	Switching disabled, 1mA pull-up applied to OUT	PVIN = 0V	1, 2, 3		0.7	1	V
			0V < PVIN < 5V	1, 2, 3		1.8	2.5	
PWM AND DUTY CYCLE								
T_{LEB}	Leading edge blank time (TPS7H502x)	5V ≤ VIN ≤ 14V, 10% of OUT rising to end of blanking		9, 10, 11		30	80	ns
T_{LEB}	Leading edge blank time (TPS7H503x)	8V ≤ VIN ≤ 14V, 10% of OUT rising to end of blanking		9, 10, 11		30	80	ns
t_{on_min}	Minimum on-time[3]			9, 10, 11		135	165	ns

6.5 Electrical Characteristics (continued)

T_A = –55°C to 125°C, PVIN = VIN = 4.5V to 14V for TPS7H502x, PVIN = VIN = 8V to 14V for TPS7H503x , VLDO = 5V, no load on OUT (unless otherwise noted)

PARAMETER		TEST CONDITIONS	SUBGROUP(1)	MIN	TYP	MAX	UNIT
t_{off_min}	Minimum off-time (TPS7H5020 & TPS7H5030) (3)		9, 10, 11		55	70	ns
D_{MAX}	Maximum duty cycle (TPS7H5021 & TPS7H5031)		9, 10, 11	42%	46%	50%	

(1) Subgroups are applicable for QML parts. For subgroup definitions, see Section 6.6.
(2) Measured at COMP pin to include error amplifier offset.
(3) See *Minimum On-Time and Off-Time* for additional details.
(4) VLDO can support this current, at the least, for test conditions specified. However, for controller operation with PVIN connected to VLDO, it is recommended to keep the external current drawn from VLDO below this value for the most reliable operation.

6.6 Quality Conformance Inspection

MIL-STD-883, Method 5005 - Group A

SUBGROUP	DESCRIPTION	TEMP (°C)
1	Static tests at	25
2	Static tests at	125
3	Static tests at	–55
4	Dynamic tests at	25
5	Dynamic tests at	125
6	Dynamic tests at	–55
7	Functional tests at	25
8A	Functional tests at	125
8B	Functional tests at	–55
9	Switching tests at	25
10	Switching tests at	125
11	Switching tests at	–55

Copyright © 2026 Texas Instruments Incorporated

6.7 Typical Characteristics

Typical characteristics shown are for TPS7H502x with PVIN=VIN from 4.5V to 14V, 500kHz switching frequency, and at T_A = –55°C, 25°C, and 125°C, unless otherwise noted.

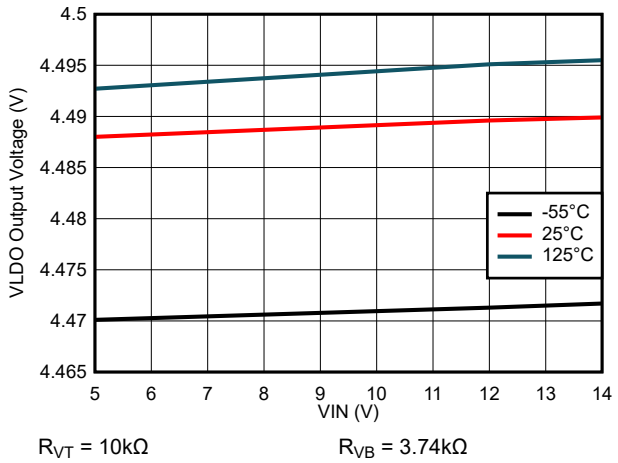

Figure 6-1. Internal Linear Regulator Output Voltage vs Input Voltage

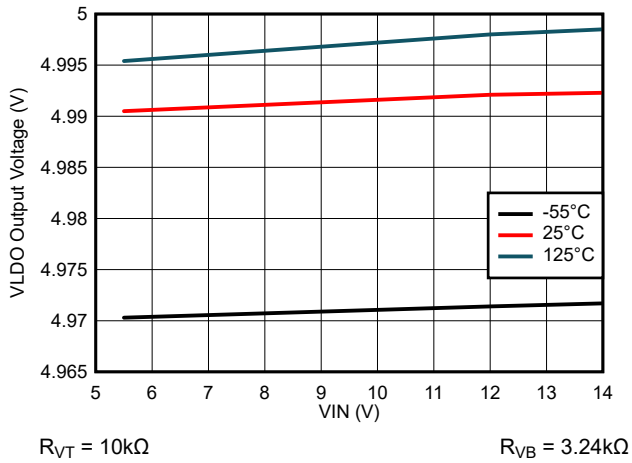

Figure 6-2. Internal Linear Regulator Output Voltage vs Input Voltage

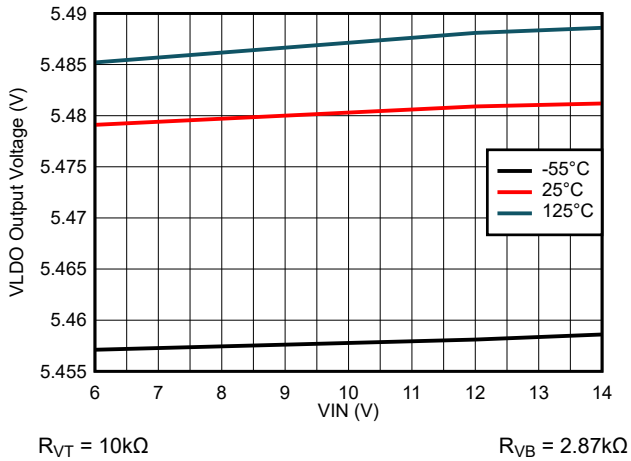

Figure 6-3. Internal Linear Regulator Output Voltage vs Input Voltage

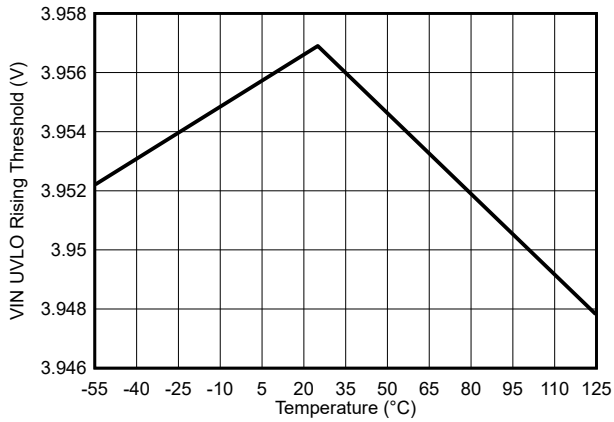

Figure 6-4. VIN UVLO Rising Threshold vs Temperature

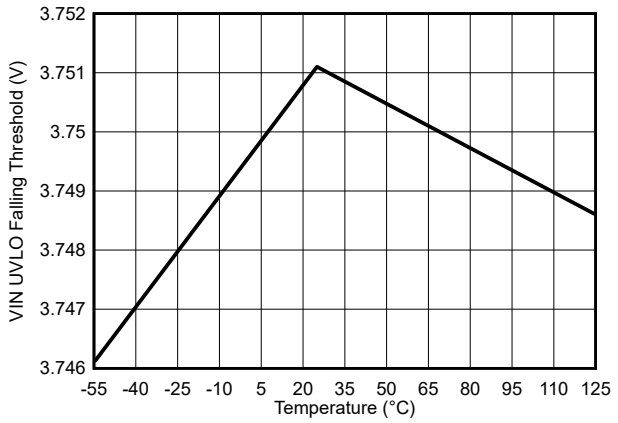

Figure 6-5. VIN UVLO Falling Threshold vs Temperature

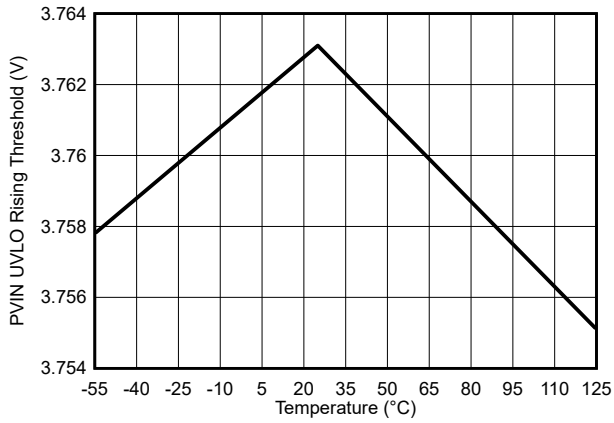

Figure 6-6. PVIN UVLO Rising Threshold vs Temperature

6.7 Typical Characteristics (continued)

Typical characteristics shown are for TPS7H502x with PVIN=VIN from 4.5V to 14V, 500kHz switching frequency, and at T_A = –55°C, 25°C, and 125°C, unless otherwise noted.

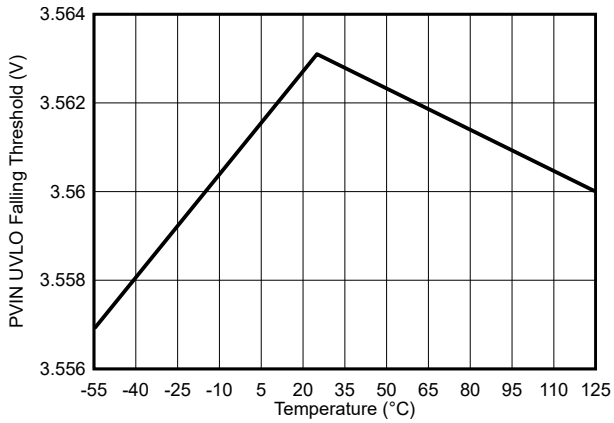

Figure 6-7. PVIN UVLO Falling Threshold vs Temperature

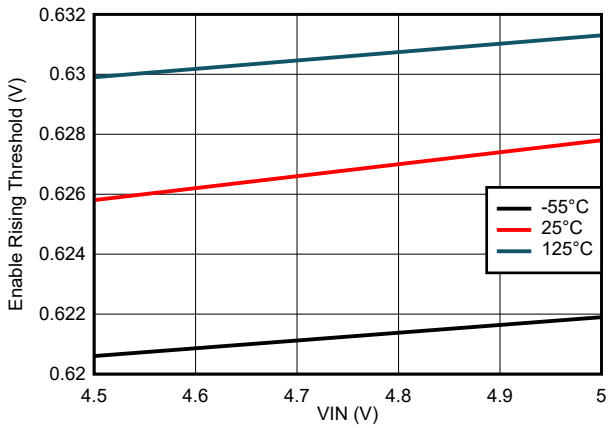

VIN = 4.5V to 5V

Figure 6-8. Enable Rising Threshold vs Input Voltage

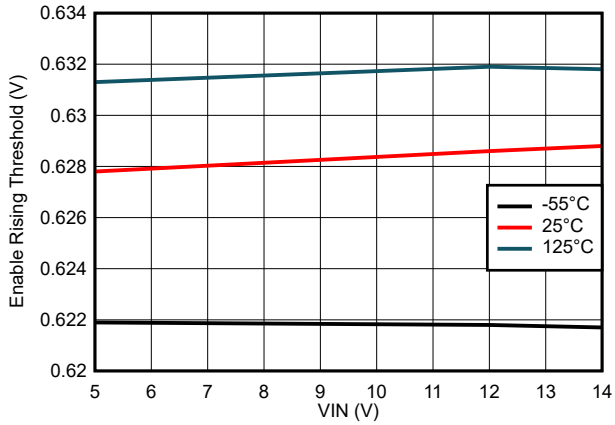

VIN = 5V to 14V

Figure 6-9. Enable Rising Threshold vs Input Voltage

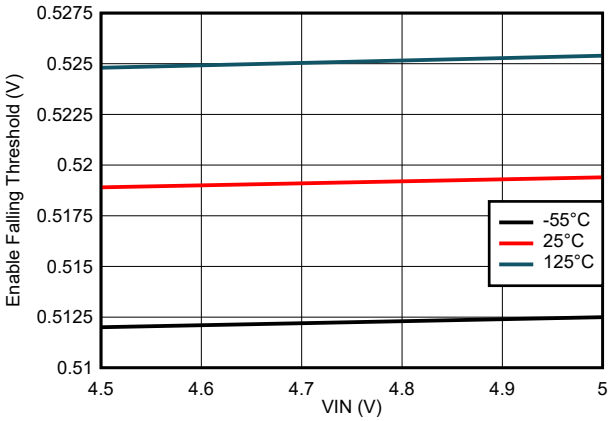

VIN = 4.5V to 5V

Figure 6-10. Enable Falling Threshold vs Input Voltage

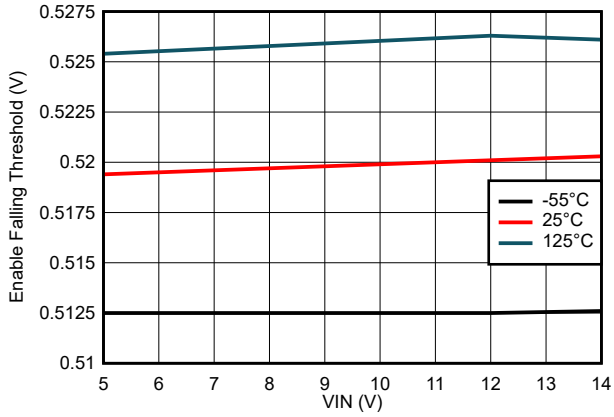

VIN = 5V to 14V

Figure 6-11. Enable Falling Threshold vs Input Voltage

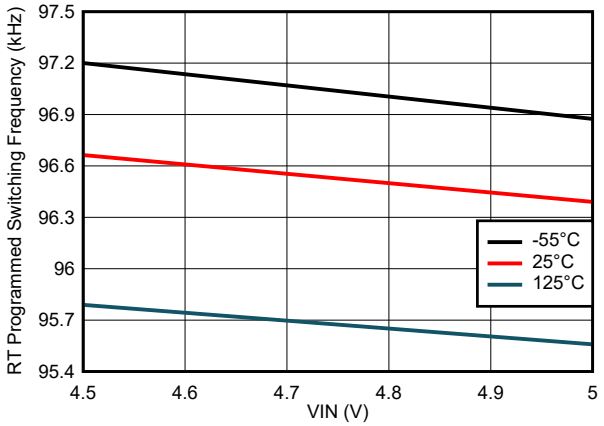

VIN = 4.5V to 5V RT = 1.18MΩ

Figure 6-12. Switching Frequency vs Input Voltage

Copyright © 2026 Texas Instruments Incorporated

6.7 Typical Characteristics (continued)

Typical characteristics shown are for TPS7H502x with PVIN=VIN from 4.5V to 14V, 500kHz switching frequency, and at T_A = –55°C, 25°C, and 125°C, unless otherwise noted.

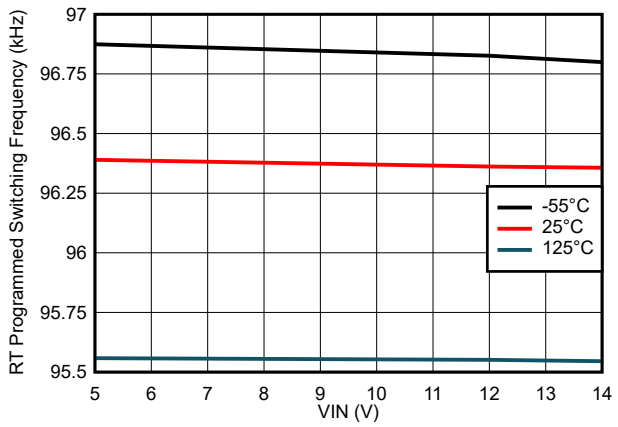

VIN = 5V to 14V RT = 1.18MΩ

Figure 6-13. Switching Frequency vs Input Voltage

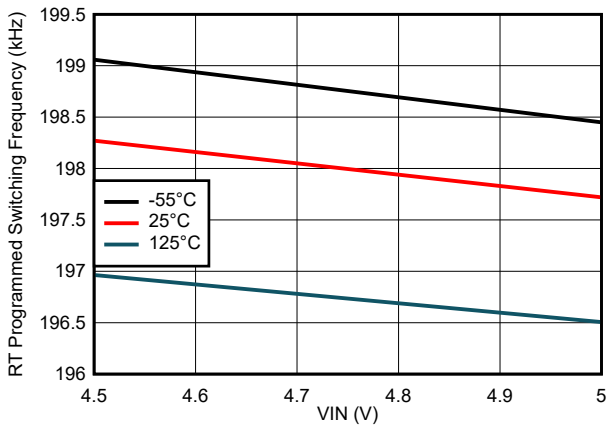

VIN = 4.5V to 5V RT = 560kΩ

Figure 6-14. Switching Frequency vs Input Voltage

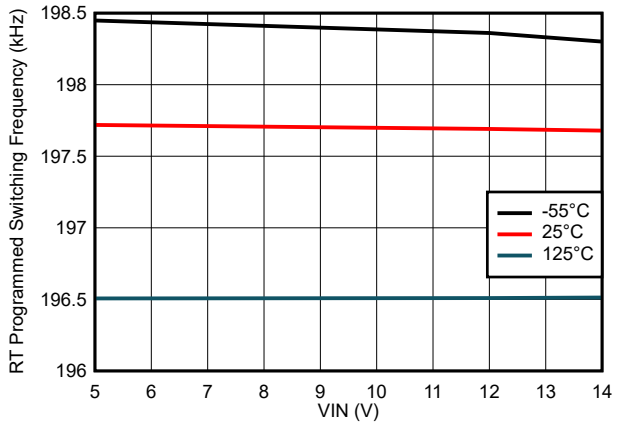

VIN = 5V to 14V RT = 560kΩ

Figure 6-15. Switching Frequency vs Input Voltage

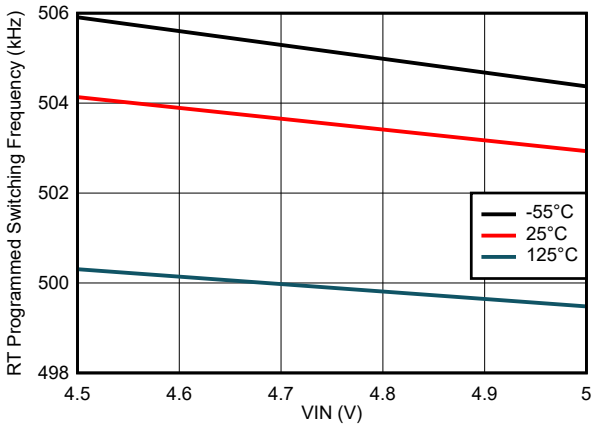

VIN = 4.5V to 5V RT = 210kΩ

Figure 6-16. Switching Frequency vs Input Voltage

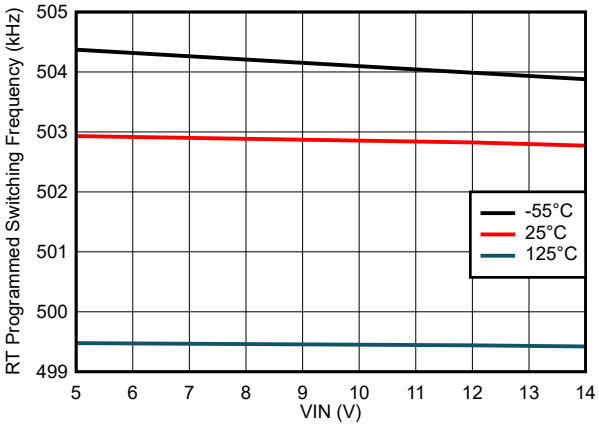

VIN = 5V to 14V RT = 210kΩ

Figure 6-17. Switching Frequency vs Input Voltage

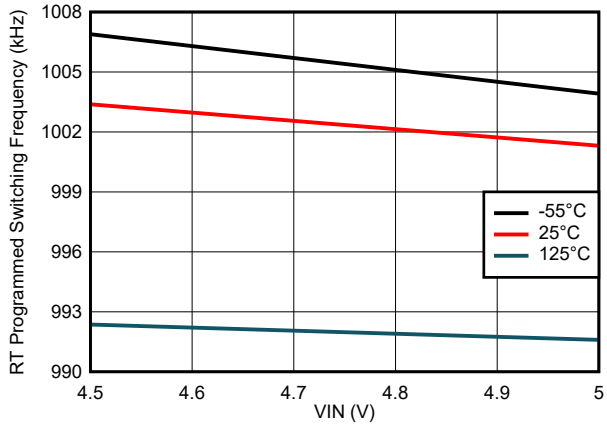

VIN = 4.5V to 5V RT = 100kΩ

Figure 6-18. Switching Frequency vs Input Voltage

6.7 Typical Characteristics (continued)

Typical characteristics shown are for TPS7H502x with PVIN=VIN from 4.5V to 14V, 500kHz switching frequency, and at T_A = –55°C, 25°C, and 125°C, unless otherwise noted.

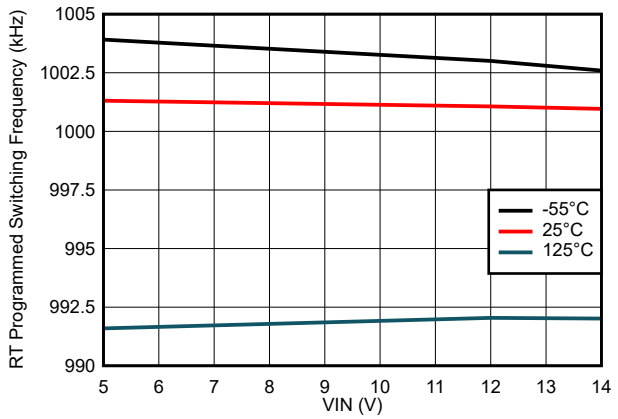

VIN = 5V to 14V RT = 100kΩ

Figure 6-19. Switching Frequency vs Input Voltage

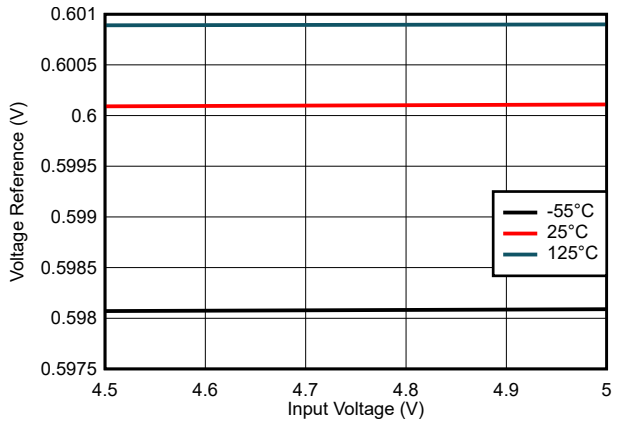

VIN = 4.5V to 5V

Figure 6-20. Internal Voltage Reference vs Input Voltage

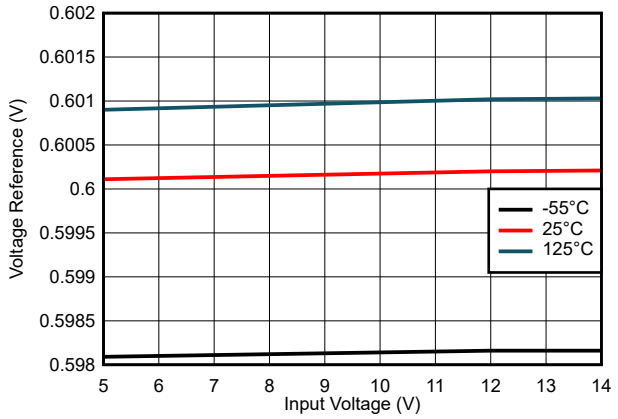

VIN = 5V to 14V

Figure 6-21. Internal Voltage Reference vs Input Voltage

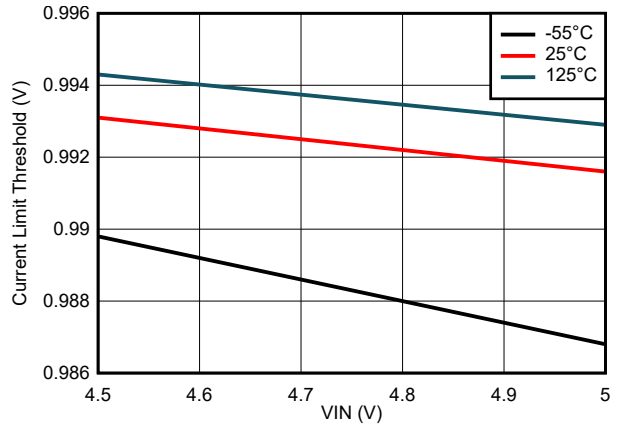

VIN = 4.5V to 5V

Figure 6-22. Current Limit Threshold vs Input Voltage

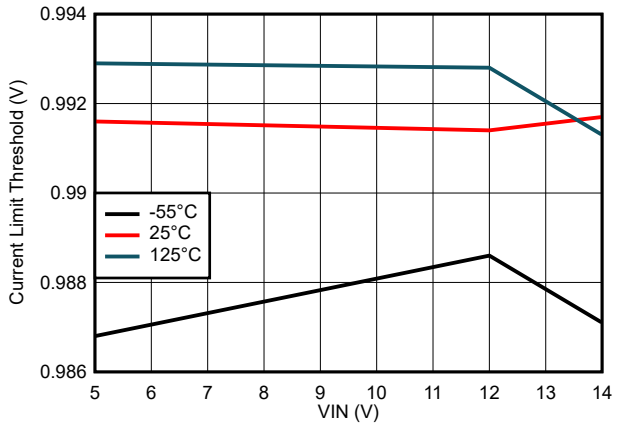

VIN = 5V to 14V

Figure 6-23. Current Limit Threshold vs Input Voltage

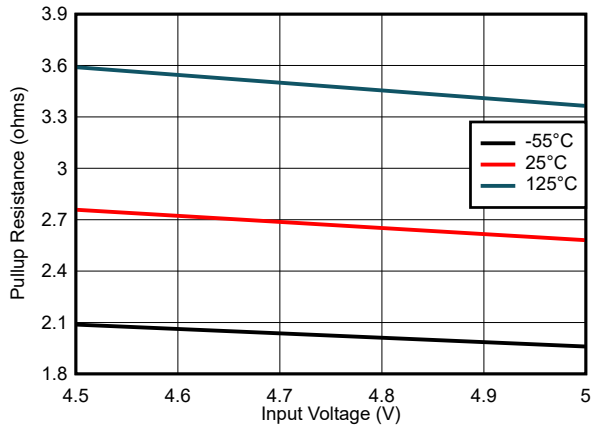

VIN = 4.5V to 5V

Figure 6-24. Pullup Resistance vs Input Voltage

Copyright © 2026 Texas Instruments Incorporated

6.7 Typical Characteristics (continued)

Typical characteristics shown are for TPS7H502x with PVIN=VIN from 4.5V to 14V, 500kHz switching frequency, and at T_A = –55°C, 25°C, and 125°C, unless otherwise noted.

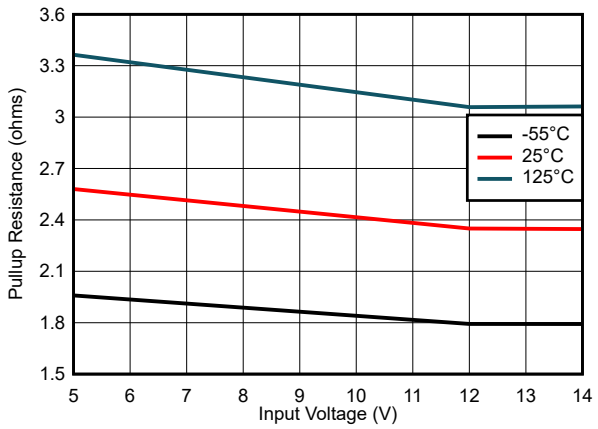

VIN = 5V to 14V

Figure 6-25. Pullup Resistance vs Input Voltage

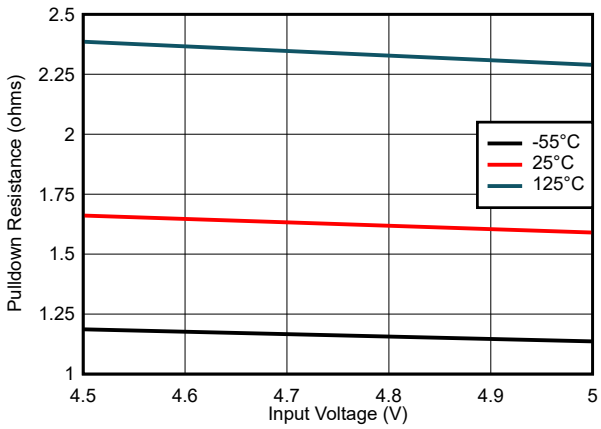

VIN = 4.5V to 5V

Figure 6-26. Pulldown Resistance vs Input Voltage

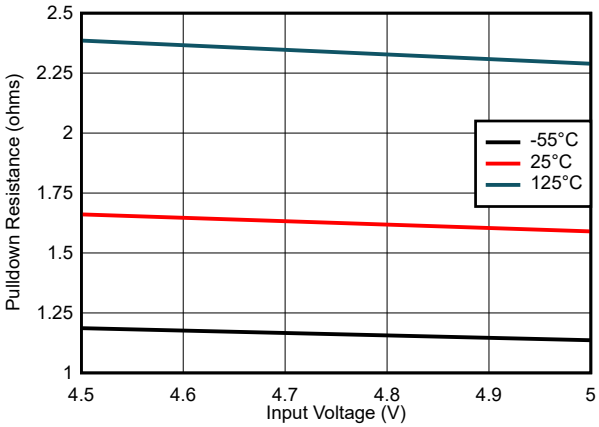

VIN = 5V to 14V

Figure 6-27. Pulldown Resistance vs Input Voltage

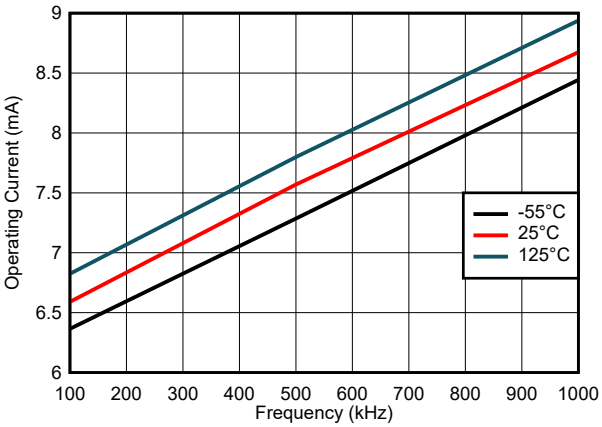

VIN = 5V, no C_{LOAD}

Figure 6-28. Operating Supply Current vs Frequency

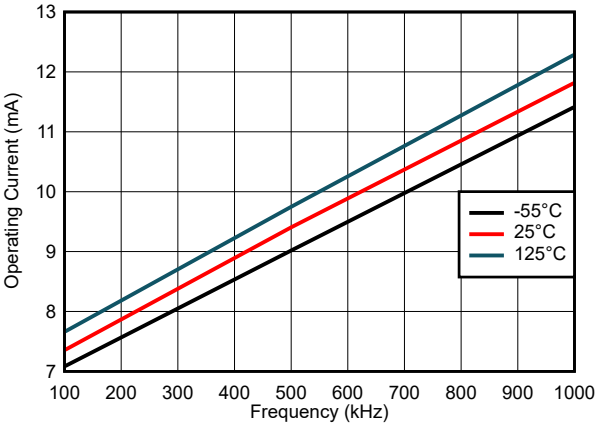

VIN = 12V, no C_{LOAD}

Figure 6-29. Operating Supply Current vs Frequency

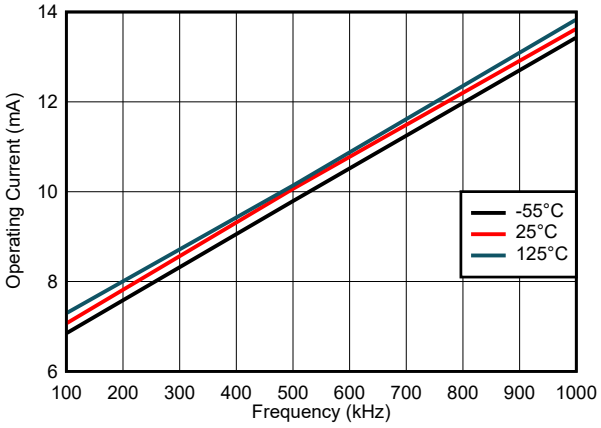

VIN = 5V, C_{LOAD}= 1nF

Figure 6-30. Operating Supply Current vs Frequency

6.7 Typical Characteristics (continued)

Typical characteristics shown are for TPS7H502x with PVIN=VIN from 4.5V to 14V, 500kHz switching frequency, and at T_A = –55°C, 25°C, and 125°C, unless otherwise noted.

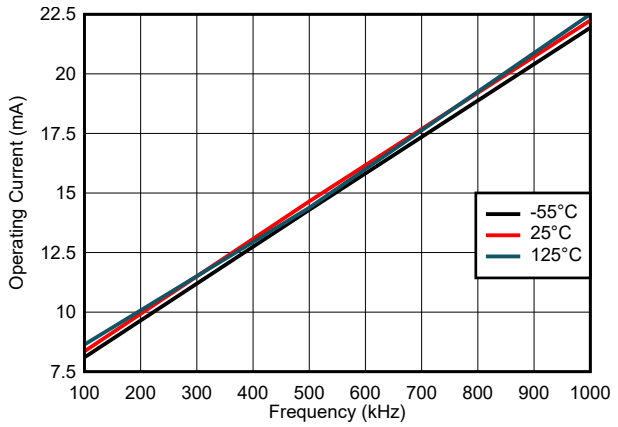

VIN = 12V C_{LOAD}= 1nF

Figure 6-31. Operating Supply Current vs Frequency

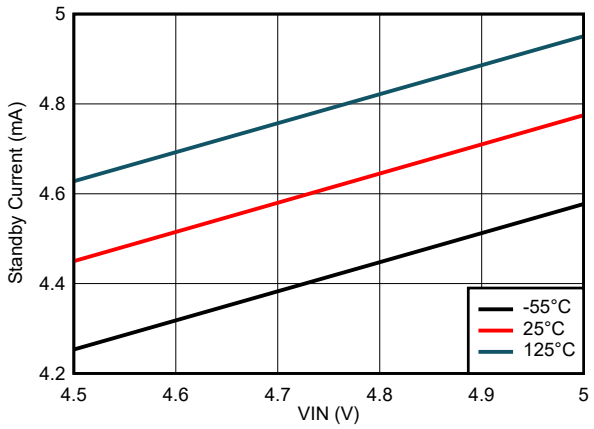

VIN = 4.5V to 5V

Figure 6-32. Standby Current vs Input Voltage

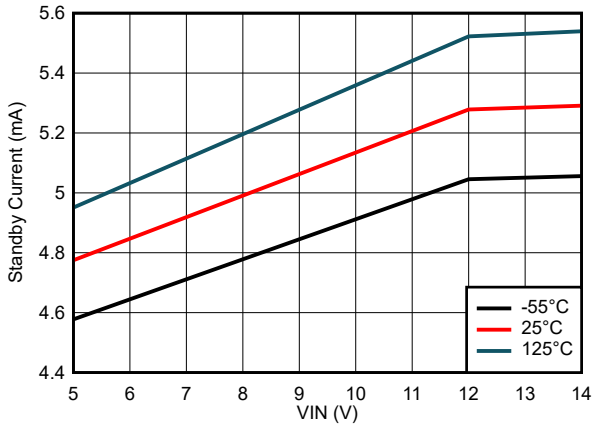

VIN = 5V to 14V

Figure 6-33. Standby Current vs Input Voltage

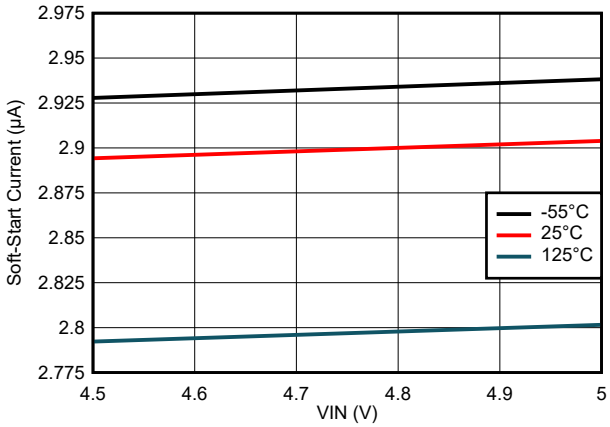

VIN = 4.5V to 5V

Figure 6-34. Soft-Start Current vs Input Voltage

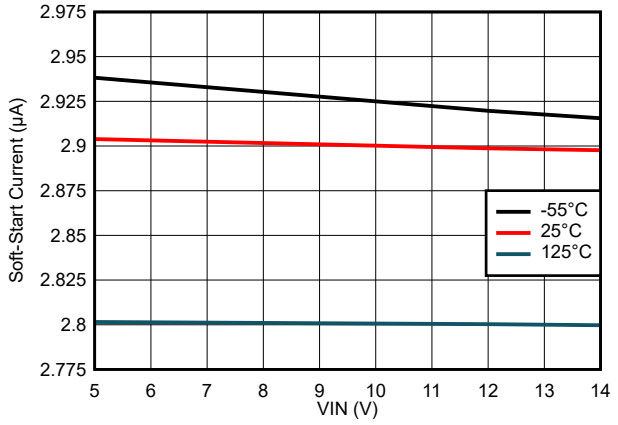

VIN = 5V to 14V

Figure 6-35. Soft-Start Current vs Input Voltage

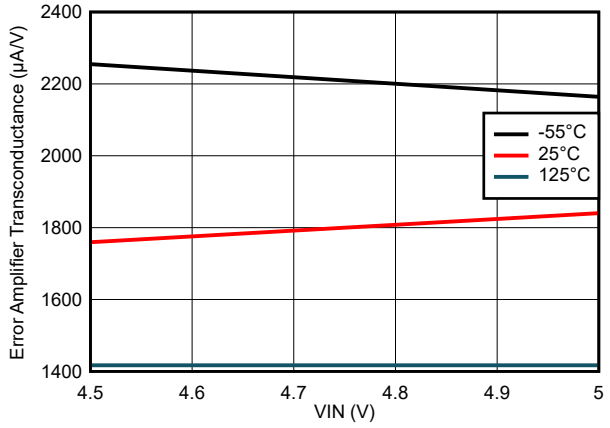

VIN = 4.5V to 5V

Figure 6-36. Error Amplifier Transconductance vs Input Voltage

Copyright © 2026 Texas Instruments Incorporated

6.7 Typical Characteristics (continued)

Typical characteristics shown are for TPS7H502x with PVIN=VIN from 4.5V to 14V, 500kHz switching frequency, and at T_A = –55°C, 25°C, and 125°C, unless otherwise noted.

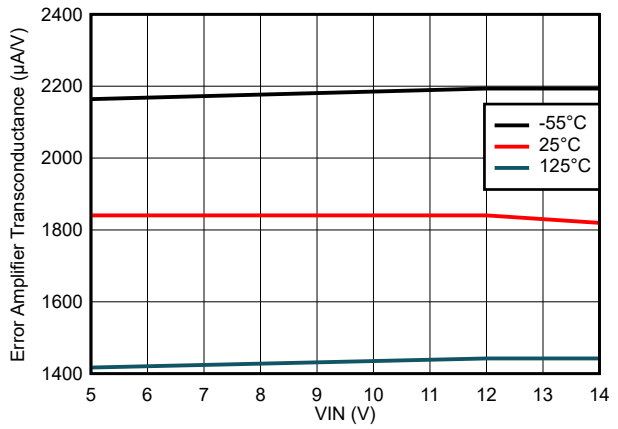

VIN = 5V to 14V

Figure 6-37. Error Amplifier Transconductance vs Input Voltage

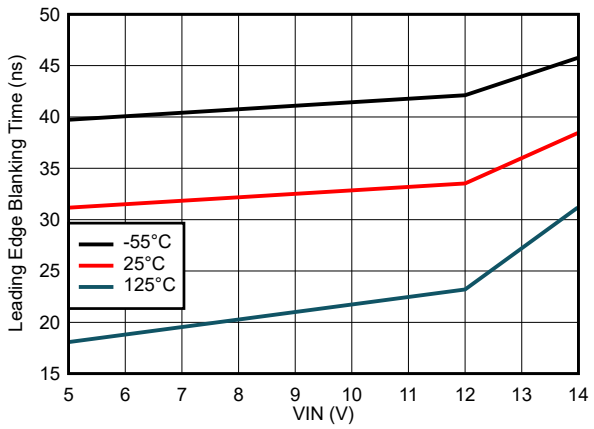

VIN = 5V to 14V

Figure 6-38. Leading Edge Blanking Time vs Input Voltage

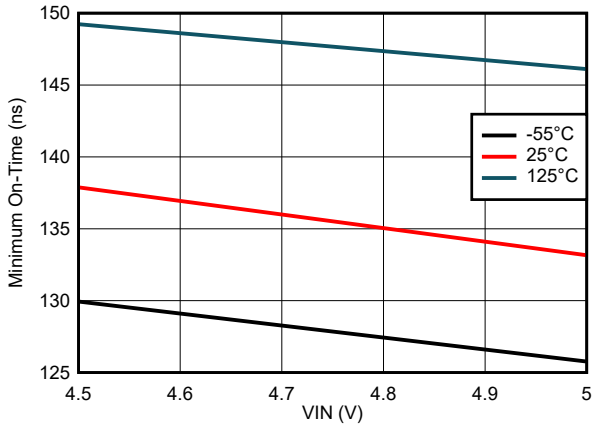

VIN = 4.5V to 5V

Figure 6-39. Minimum On-Time vs Input Voltage

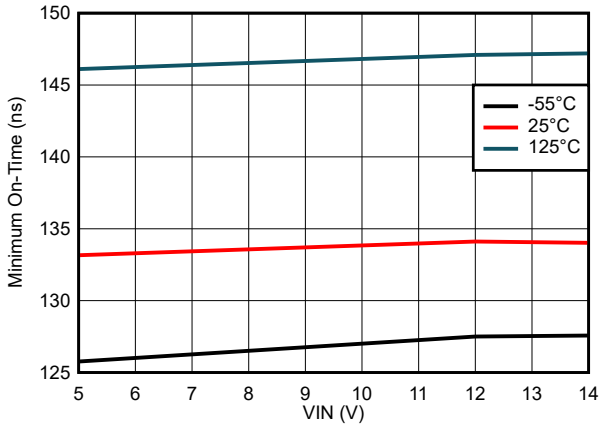

VIN = 5V to 14V

Figure 6-40. Minimum On-Time vs Input Voltage

6.7 Typical Characteristics (continued)

Typical characteristics shown are for TPS7H502x with PVIN=VIN from 4.5V to 14V, 500kHz switching frequency, and at T_A = –55°C, 25°C, and 125°C, unless otherwise noted.

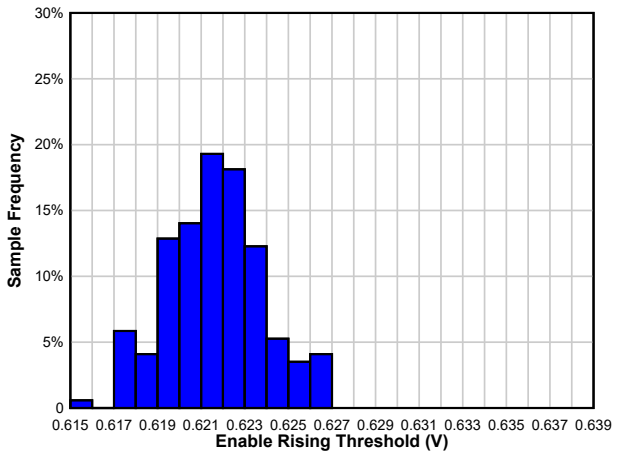

VIN = 12V

Figure 6-41. Enable Rising Threshold Distribution at T_A = -55°C

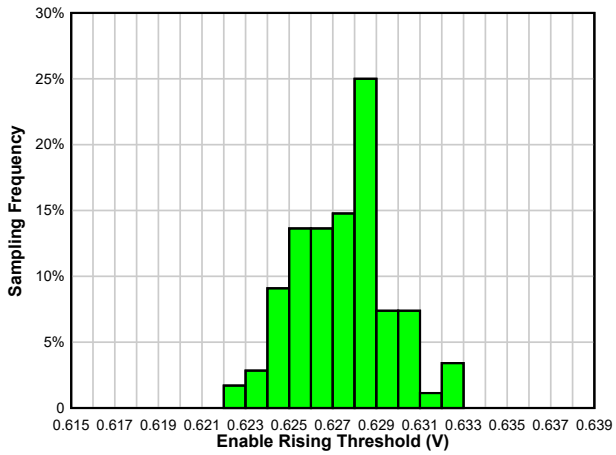

VIN = 12V

Figure 6-42. Enable Rising Threshold Distribution at T_A = 25°C

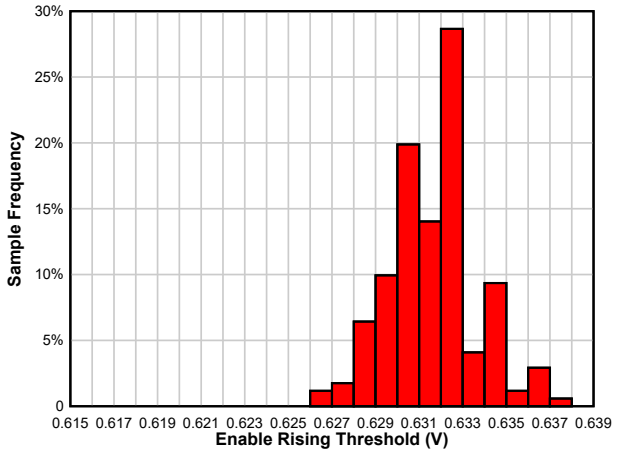

VIN = 12V

Figure 6-43. Enable Rising Threshold Distribution at T_A = 125°C

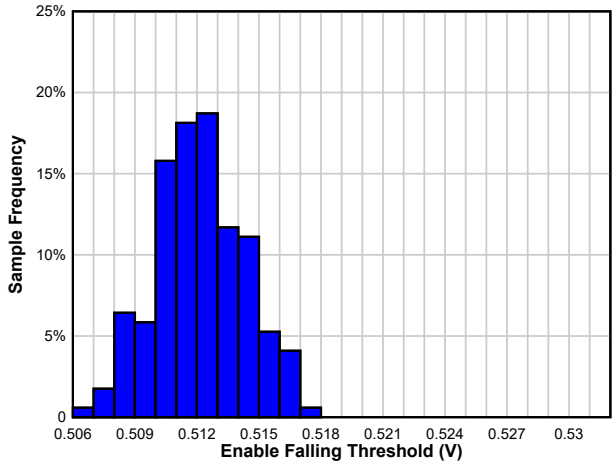

VIN = 12V

Figure 6-44. Enable Falling Threshold Distribution at T_A = -55°C

Copyright © 2026 Texas Instruments Incorporated

6.7 Typical Characteristics (continued)

Typical characteristics shown are for TPS7H502x with PVIN=VIN from 4.5V to 14V, 500kHz switching frequency, and at T_A = –55°C, 25°C, and 125°C, unless otherwise noted.

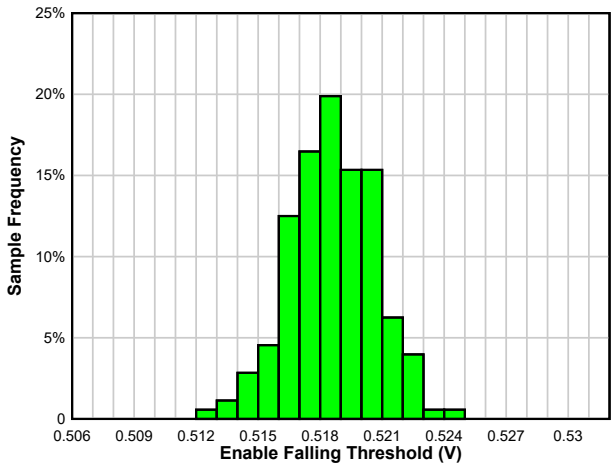

VIN = 12V

Figure 6-45. Enable Falling Threshold Distribution at T_A = 25°C

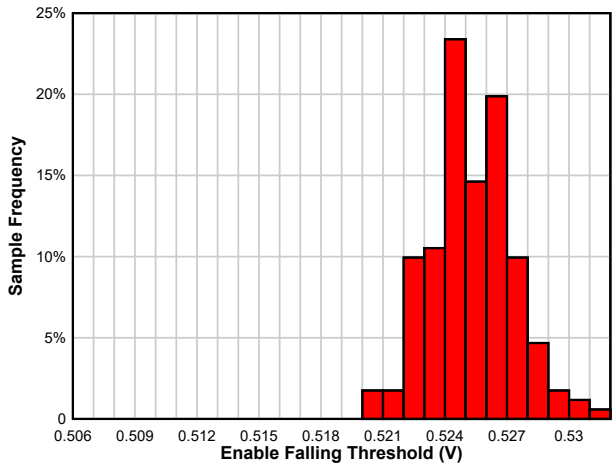

VIN = 12V

Figure 6-46. Enable Falling Threshold Distribution at T_A = 125°C

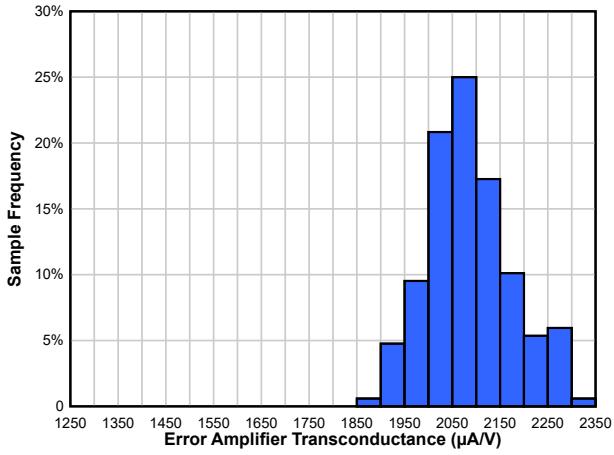

VIN = 12V

Figure 6-47. Error Amplifier Transconductance Distribution at T_A = -55°C

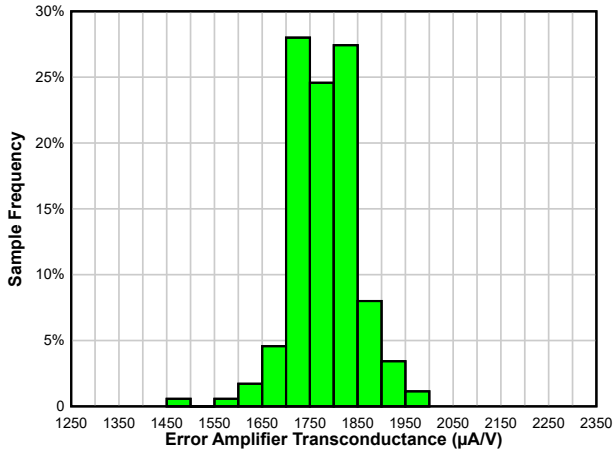

VIN = 12V

Figure 6-48. Error Amplifier Transconductance Distribution at T_A = 25°C

6.7 Typical Characteristics (continued)

Typical characteristics shown are for TPS7H502x with PVIN=VIN from 4.5V to 14V, 500kHz switching frequency, and at T_A = –55°C, 25°C, and 125°C, unless otherwise noted.

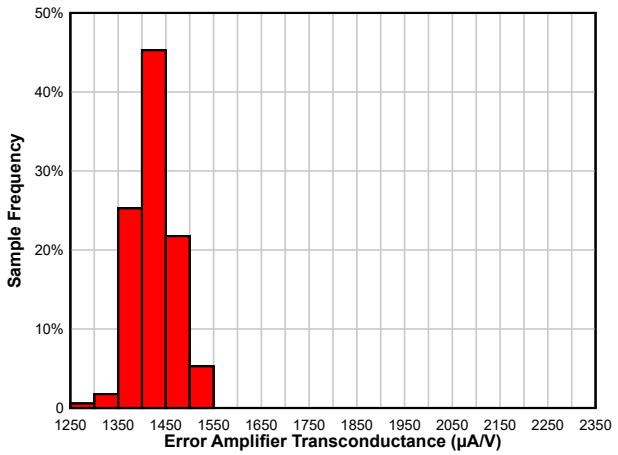

VIN = 12V

Figure 6-49. Error Amplifier Transconductance Distribution at T_A = 125°C

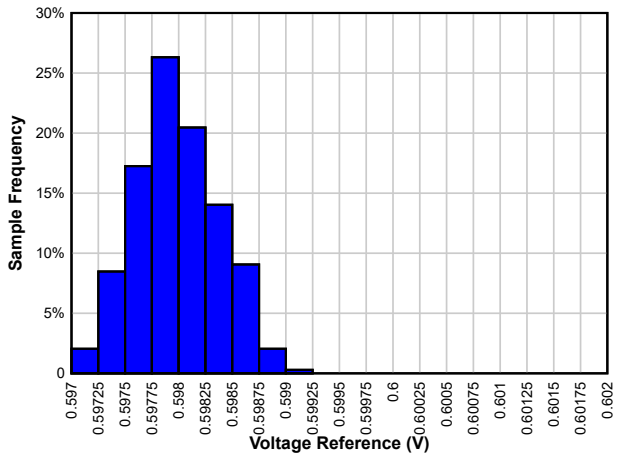

VIN = 12V

Figure 6-50. Voltage Reference Distribution at T_A = -55°C

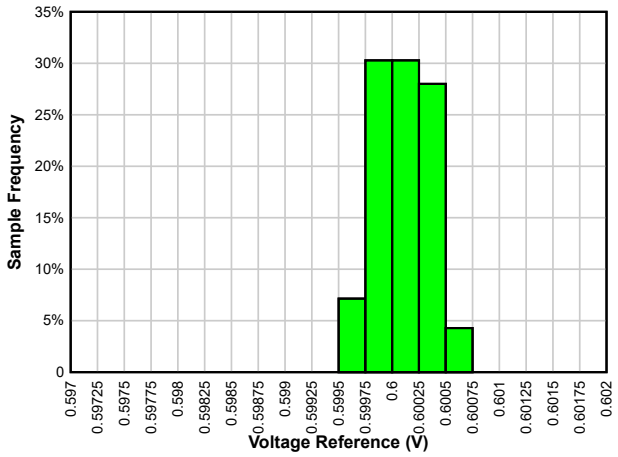

VIN = 12V

Figure 6-51. Voltage Reference Distribution at T_A = 25°C

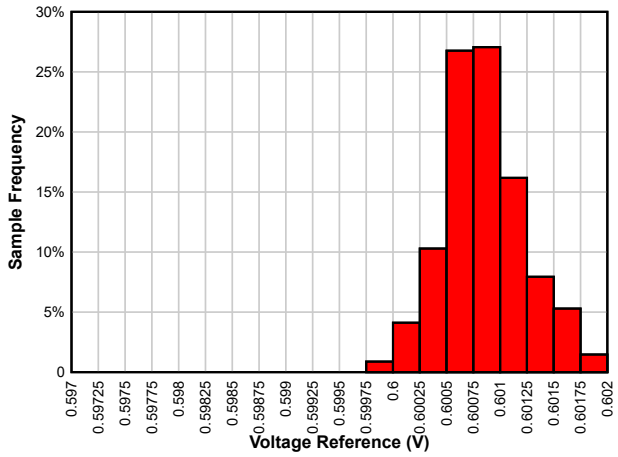

VIN = 12V

Figure 6-52. Voltage Reference Distribution at T_A = 125°C

Copyright © 2026 Texas Instruments Incorporated

7 Detailed Description

7.1 Overview

The TPS7H502x and TPS7H503x are radiation-hardened current mode, single-ended PWM controllers that contain integrated gate drivers. The TPS7H502x device is capable of operation up to 1MHz in all modes, while the TPS7H503x is operational up to 500kHz. These controllers are intended for use in space-grade power controller designs and can support topologies such as the flyback, forward, and the boost. The TPS7H5020 and TPS7H5030 have a nominal maximum duty cycle of 100%, while the TPS7H5021 and TPS7H503x have a nominal 50% duty cycle limit.

The controllers also feature a 0.6V ±1% voltage reference to enable high accuracy converter designs. Features such as soft-start, enable, and adjustable slope-compensation are included in the controller, simplifying the overall converter design and minimizing the external components needed. The converters also can be synchronized to an external clock through the SYNC pin. The external clock synchronization range is from 100kHz to 1MHz for the TPS7H502x, which is the same as the frequency range in internal oscillator mode. The TPS7H503x external clock synchronization range is from 100kHz to 500kHz.

The controllers offer separate voltage inputs for the controller voltage and driver stage though the VIN and PVIN pins, respectively. The voltage range for both of these inputs is from 4.5V to 14V for the TPS7H502x, and offers the user a great deal of flexibility. The TPS7H503x input voltage range is from 8V to 14V. The integrated drivers can be used with silicon FETs (typical 12V gate voltage), while the TPS7H502x can also be used with GaN power semiconductor devices (typical 5V gate voltage). When driving GaN devices with the TPS7H502x, the VLDO regulator output can be tied directly to PVIN or a separate supply can be utilized at PVIN if the user desires. The TPS7H502x VLDO output is programmable from 4.5V to 5.5V.

Copyright © 2026 Texas Instruments Incorporated

7.2 Functional Block Diagram

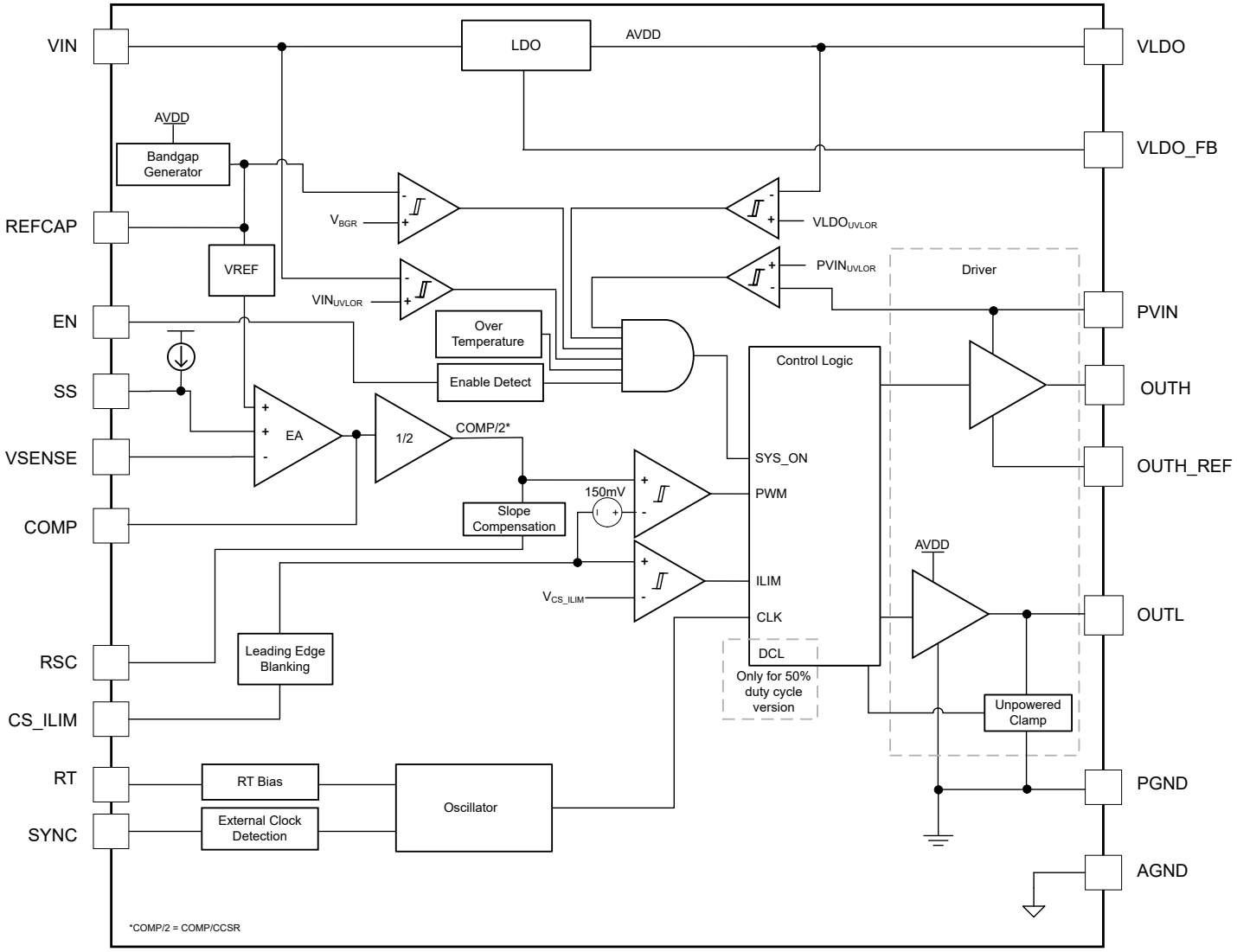

Figure 7-1. TPS7H502x Functional Block Diagram

Copyright © 2026 Texas Instruments Incorporated

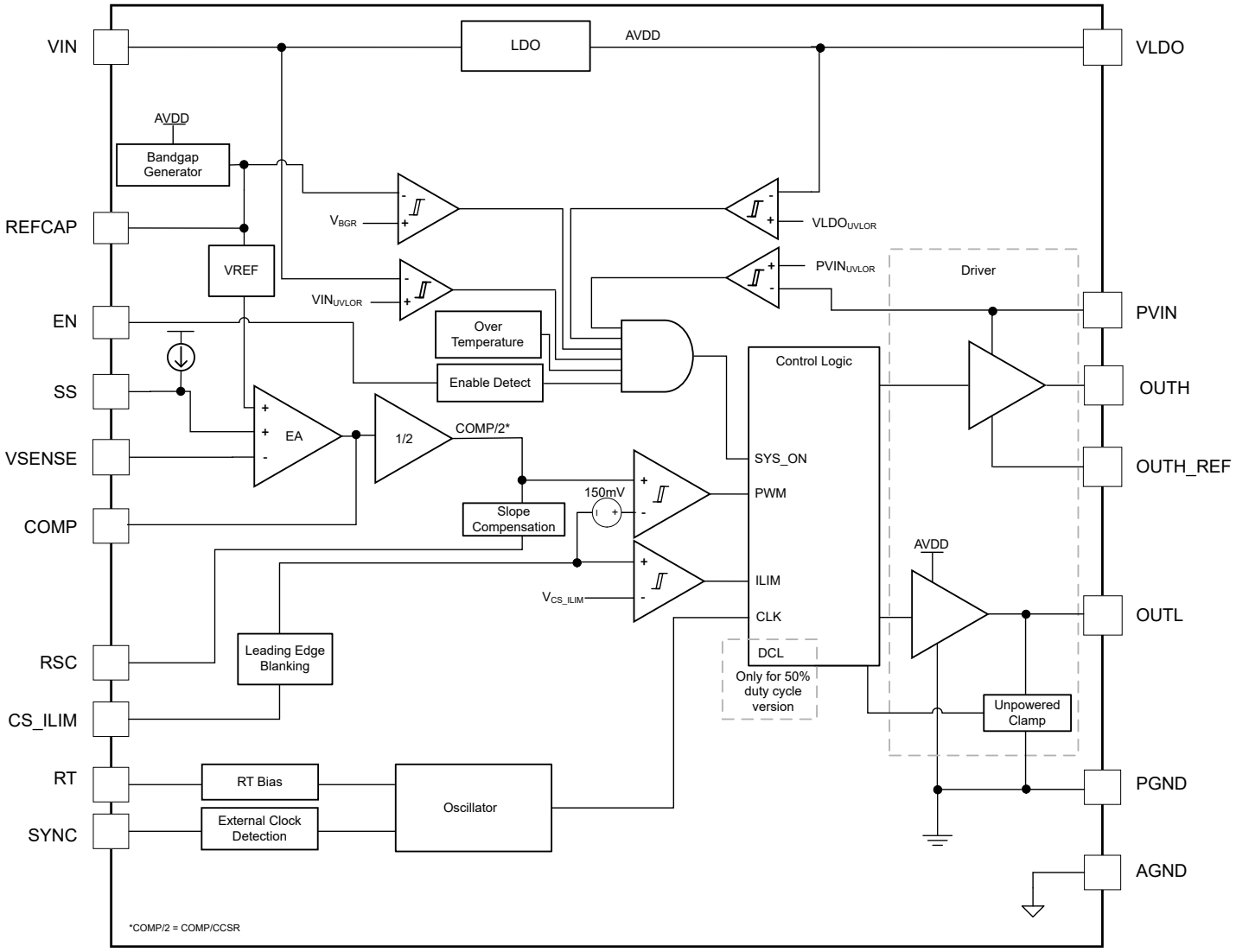

Figure 7-2. TPS7H503x Functional Block Diagram

7.3 Feature Description

7.3.1 Input Voltage (VIN) and VLDO

During steady state operation, the input voltage of the TPS7H502x must be between 4.5V and 14V, while the input voltage range for TPS7H503x is 8V to 14V. A minimum bypass capacitance of at least 0.1µF is needed between VIN and AGND. Place the input bypass capacitors as close to the controller as possible. A resistor divider connected between VIN, EN, and GND can be used to adjust the input voltage UVLO.

The voltage applied at VIN serves as the input for the internal regulator that generates the voltage at VLDO. For TPS7H502x, the VLDO output is programmable from 4.5V to 5.5V. This allows for connecting VLDO to PVIN and driving GaN power semiconductor devices using the controller. When programming VLDO, the resistor divider consists of two resistors: R_{VT} between VLDO and VLDO_FB, and R_{VB} between VLDO_FB and AGND. Equation 1 can be used to select the proper R_{VB} resistor.

$$R_{VB} = \frac{V_{REFCAP}}{V_{LDO} - V_{REFCAP}} \times R_{VT} \quad (1)$$

where:

- V_{REFCAP} is 1.223V (typical)
- VLDO is the desired output voltage of the internal regulator between 4.5V and 5.5V
- R_{VT} is the value of the top resistor, between VLDO and VLDO_FB, selected by the user (for example, 10kΩ)

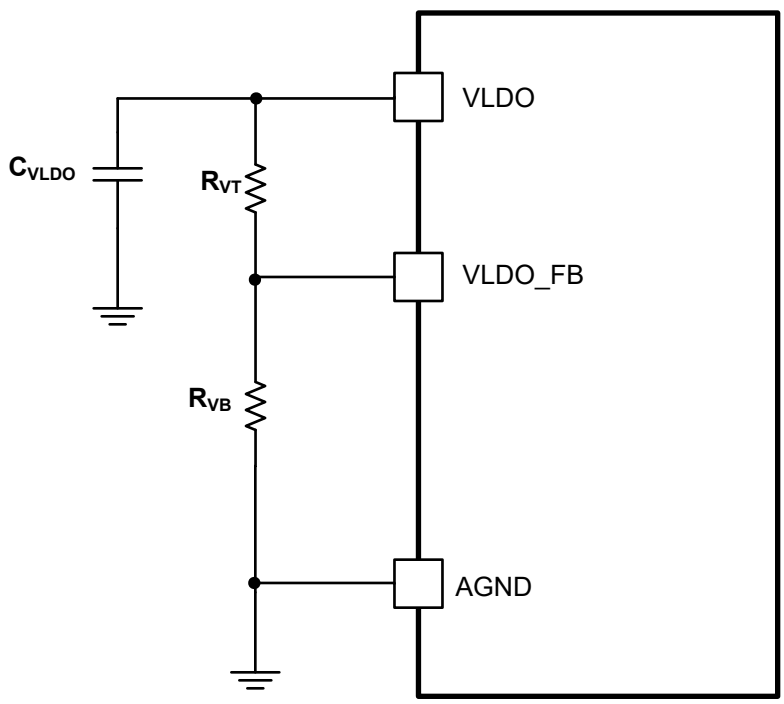

Figure 7-3. Configuration for Programming TPS7H502x VLDO Output Voltage

For TPS7H502x applications in which VLDO is not used as the input to the driver stage, TI recommends selecting resistors to set VLDO to 5V. The resistors R_{VT} and R_{VB} must always be populated. The maximum dropout voltage for the TPS7H502x VLDO regulator is 0.4V. Note that as the headroom voltage increases for the VLDO regulator, the output current capacity also increases until the input voltage reaches 7V. At this point, the full current capability of the VLDO regulator is realized. See Section 6.5 for more details. This becomes critical for applications in which VLDO is used to provide a regulated input voltage at PVIN for driving GaN FETs, as the gate current demanded by the FET is determined by:

$$I_g = Q_g \times f_{sw} \quad (2)$$

Copyright © 2026 Texas Instruments Incorporated

where:

- I_g is the gate current of the GaN FET
- Q_g is the total gate charge of the GaN FET (found in the manufacturer's data sheet)
- f_{sw} is the power converter switching frequency

The external current to be supplied to the FET by VLDO in this scenario must not exceed the capability of the regulator. For the TPS7H503x, the VLDO output is fixed at 5V. Since PVIN has a minimum recommended operating voltage of 8V for this device, VLDO cannot be connected to PVIN. The recommended capacitance to be connected at VLDO is 1µF for all devices. The EN pin of the device can also be tied to VLDO.

7.3.2 Driver Input Voltage (PVIN)

The input voltage range of the driver stage of the TPS7H502x is between 4.5V and 14V. The driver stage of the TPS7H503x can accommodate 8V to 14V. The voltage provided at the OUT pins of the device is approximately equal to the voltage supplied at PVIN. As such, the TPS7H502x controller is able to be used to supply proper gate voltages for both silicon MOSFET and GaN FET based power converter designs. The TPS7H503x is tailored towards silicon MOSFET based designs. For silicon MOSFETs, the typical gate voltage is from 10V to 12V. GaN power semiconductor devices usually require 4.5V to 6V gate voltages. Since the required gate voltage is dependent on the switching device that is selected, the controllers allow the user the capability to provide a voltage to the driver stage that is adequate for the specific application. PVIN can be tied directly to VIN for single supply operation. This configuration can be utilized for driving either silicon MOSFETs for TPS7H502x and TPS7H503x, or GaN FETs for TPS7H502x. In this setup for TPS7H502x, the recommendation is to select R_{VT} and R_{VB} such that VLDO provides 5V for the internal circuitry. See *Input Voltage (VIN) and VLDO* for more details on programming the VLDO output.

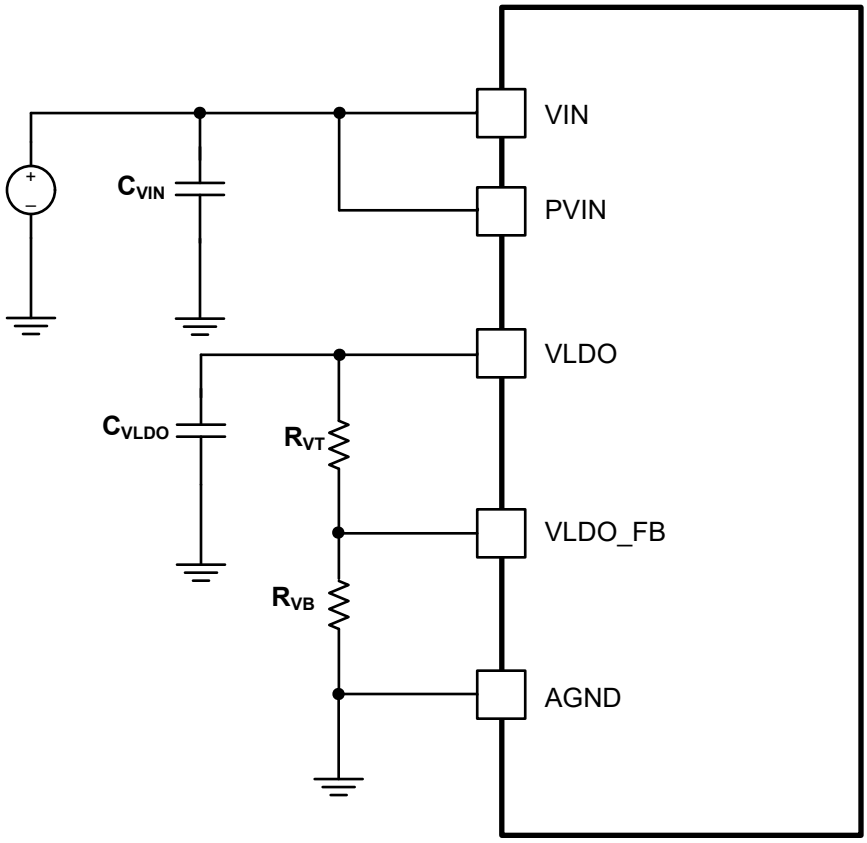

Figure 7-4. Configuration for PVIN to VIN Connection for TPS7H502x

VLDO can also be connected to PVIN in the TPS7H502x for a 4.5V to 5.5V regulated gate drive voltage. A minimum capacitance of 1µF is recommended from PVIN to PGND for all the controllers. When PVIN

is connected to VLDO for TPS7H502x, this can include the 1µF capacitance required at VLDO. Additional capacitance can be used, but the total capacitance is not to exceed 4.7µF to maintain proper stability for the VLDO regulator.

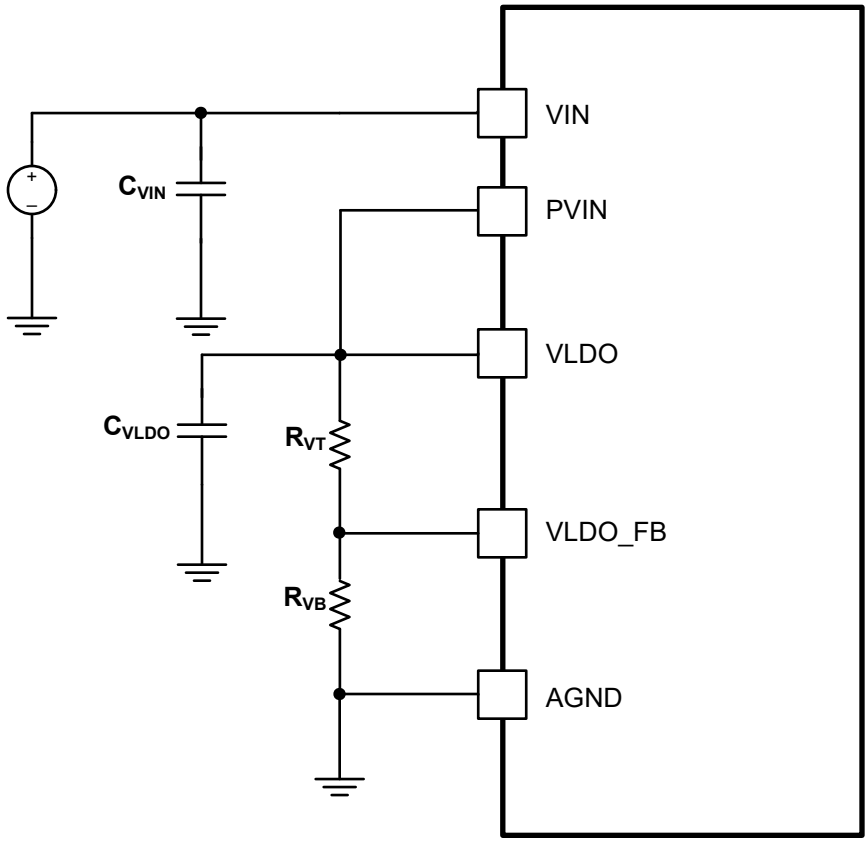

Figure 7-5. Configuration for PVIN to VLDO Connection for TPS7H502x

7.3.3 Start-Up

Before the output of the controller can start switching, the following conditions must be met:

- VLDO exceeds rising UVLO threshold
- VIN exceeds rising UVLO threshold
- PVIN exceeds rising UVLO threshold
- The internal 1.2V bandgap voltage is available
- The enable signal EN is above the rising voltage threshold
- The device junction temperature is below the thermal shutdown threshold

Once all of the aforementioned conditions are satisfied, the soft-start process is initiated.

7.3.4 Enable and Undervoltage Lockout (UVLO)

There are several methods for enabling the TPS7H502x and TPS7H503x through the EN pin. The pin can be tied directly to VLDO, which allows for the device to be enabled as soon as the voltage on VLDO surpasses the rising edge voltage threshold of the EN pin. The pin can also be driven with an externally generated signal or a compatible PGOOD signal for instances in which sequencing is desired. Lastly, two resistors can be used to program the controller to enable when VIN surpasses a user determined threshold, as shown in Figure 7-6. The two resistors are configured as a divider, with one between VIN and EN and the other between EN and AGND.

Copyright © 2026 Texas Instruments Incorporated

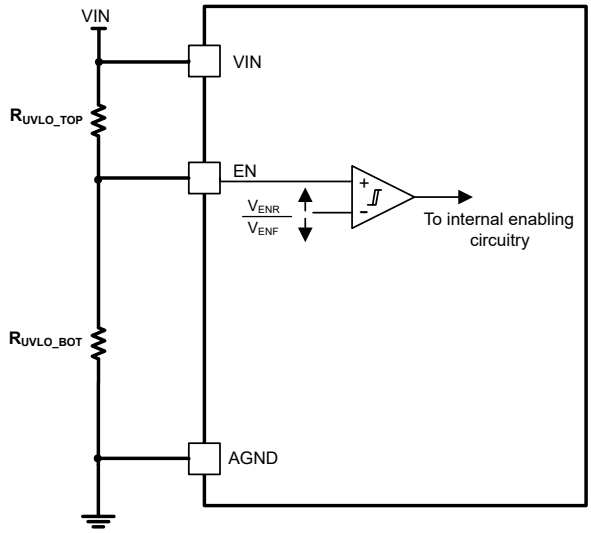

Figure 7-6. Enable Pin Configuration Using Two External Resistors

Using Equation 3, the user can calculate the value for R_{UVLO_TOP} for a chosen value of R_{UVLO_BOT} based on the desired maximum start-up voltage for the device. With these selected resistors Equation 4 can be used to determine the minimum start-up voltage.

$$R_{UVLO_TOP} = R_{UVLO_BOT} \times \left[\frac{V_{START_MAX}}{V_{ENR_MAX}} - 1\right] \tag{3}$$

$$V_{START_MIN} = V_{ENR_MIN} \times \left[\frac{R_{UVLO_TOP}}{R_{UVLO_BOT}} + 1\right] \tag{4}$$

In the two-resistor configuration of Figure 7-6, the controller also shuts down due to undervoltage lockout when the input voltage falls below a particular threshold. This is due to the hysteresis of the EN pin. To determine the voltages at which shutdown is expected to occur, use Equation 5 and Equation 6.

$$V_{STOP_MAX} = V_{ENF_MAX} \times \left[\frac{R_{UVLO_TOP}}{R_{UVLO_BOT}} + 1\right] \tag{5}$$

$$V_{STOP_MIN} = V_{ENF_MIN} \times \left[\frac{R_{UVLO_TOP}}{R_{UVLO_BOT}} + 1\right] \tag{6}$$

It is important to note that the user should take care when selecting the values for R_{UVLO_TOP} and R_{UVLO_BOT}. It is recommended to optimize the selection of these resistors for start-up to ensure proper operation. The UVLO value must be approximately 75% or less of the input voltage to make sure that the device turns on as expected under all circumstances. Setting the UVLO any higher can cause issues with the turn-on of the device. Figure 7-7 shows the expected start-up and UVLO voltages on a 12V rail where the maximum start-up voltage is 90% of the nominal input voltage. In this instance, turn-off will occur when the input voltage falls to between 75% and 65% of nominal value.

Copyright © 2026 Texas Instruments Incorporated

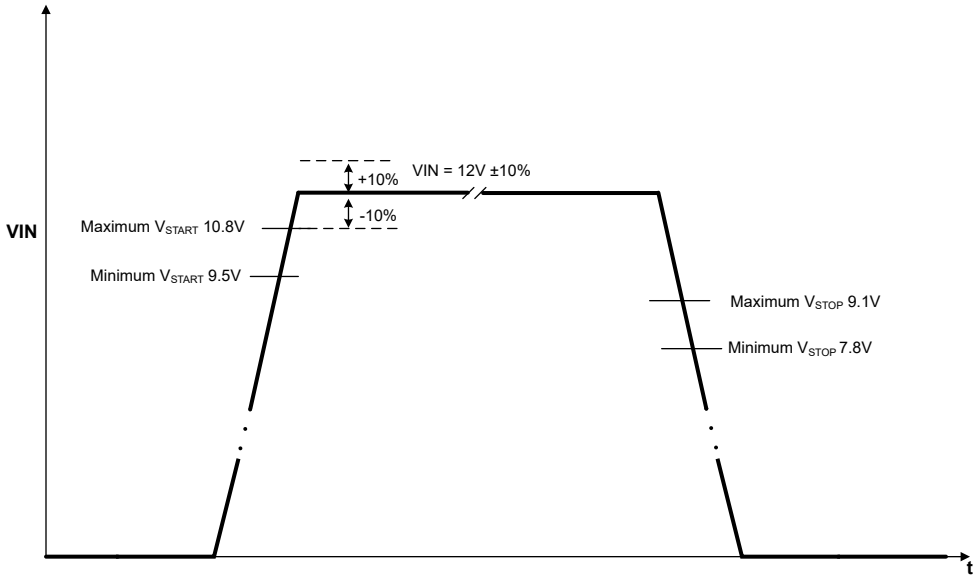

Figure 7-7. Start-Up and UVLO Values for Two-Resistor Configuration With VIN = 12V

7.3.5 Voltage Reference

The controller generates an internal 1.2V bandgap reference that is utilized throughout the various control logic blocks. This is the voltage present on the REFCAP pin during steady state operation. This voltage is divided down to 0.6V to produce the reference for the error amplifier. The error amplifier reference is measured at the COMP pin to account for offsets in the error amplifier and maintains regulation within ±1% as shown in *Specifications*. This tight reference tolerance allows for the user to design a highly accurate power converter. A 470nF capacitor to ground is required at the REFCAP pin for proper electrical operation as well as to provide robust single-event transient (SET) performance of the device.

7.3.6 Error Amplifier

The TPS7H502x and TPS7H503x controllers use a transconductance error amplifier. The error amplifier compares the VSENSE pin voltage to the lower of the SS pin voltage or the internal 0.6V voltage reference. The transconductance of the error amplifier is 1500µA/V during normal operation. The frequency compensation network is connected between COMP pin and AGND. The error amplifier DC gain is typically 14,500V/V.

7.3.7 Output Voltage Programming

The output voltage of the power converter is set by using a resistor divider from V_{OUT} of the converter to the VSENSE pin. The output voltage must be divided down to the nominal voltage reference of 0.6V. Equation 7 can be used to select R_{BOTTOM}.

$$R_{BOTTOM} = \frac{V_{REF}}{V_{OUT} - V_{REF}} \times R_{TOP} \tag{7}$$

where:

- V_{REF} is 0.6V (typical)
- V_{OUT} is the desired output voltage
- R_{TOP} is the value of the top resistor, selected by the user (for example, 10kΩ)

The recommendation is to use low tolerance resistors (1% or less) for R_{BOTTOM} and R_{TOP} for improved output voltage setpoint accuracy.

Copyright © 2026 Texas Instruments Incorporated

7.3.8 Soft Start (SS)

The soft-start circuit increases the output voltage of the converter gradually until the steady-state programmed output is reached. During soft start, the error amplifier uses the voltage on the soft-start pin as reference until the SS pin voltage rises above V_{REF}. Once the voltage at SS pin is above V_{REF}, the soft-start period is complete.

A capacitor between the SS pin and AGND controls the soft-start time of the PWM controller. The following equation can be used to select the capacitor for the desired soft-start time:

$$t_{SS} = \frac{C_{SS} \times V_{REF}}{I_{SS}} \tag{8}$$

where:

- t_{SS} is the desired soft-start time
- V_{REF} is the voltage reference of 0.6V (typical)
- I_{SS} is the soft-start charging current of 2.8µA (typical)

7.3.9 Switching Frequency and External Synchronization

The TPS7H502x and TPS7H503x controllers have two modes for setting the switching frequency of the device: internal oscillator and external synchronization. The device is placed in one of these modes based on the state of the RT and SYNC pins. If there is a clock input detected on SYNC, the device runs in external synchronization mode. Otherwise, the device runs on the internal oscillator at a frequency determined by a resistor from RT to AGND. RT must be populated in both operational modes.

Table 7-1. Oscillator Modes and Configurations

MODE	RT	SYNC	SWITCHING FREQUENCY
Internal Oscillator	Populated with resistor to AGND.	Floating	Configurable from 100kHz to 1MHz for TPS7H502x or 100kHz to 500kHz for TPS7H503x depending on RT value.
External Synchronization	Populated with resistor to AGND. Must be selected to match input clock frequency on SYNC.(1)	Input for 100kHz to 1MHz external clock for TPS7H502x. Use a 100kHz to 500kHz clock for TPS7H503x.	Synchronized to SYNC input clock. Switching is in phase with external clock at 1:1 frequency.

(1) See *External Synchronization with TPS7H5021 and TPS7H5031* for specific guidance on selecting the RT resistor in external synchronization mode when using the devices with 50% duty cycle limit (TPS7H5021 and TPS7H5031).

7.3.9.1 Internal Oscillator Mode

A resistor from the RT pin to AGND sets the switching frequency of the device. The TPS7H502x controller has a nominal switching frequency range of 100kHz to 1MHz, while the TPS7H503x has a maximum nominal frequency of 500kHz. In internal oscillator mode, the RT pin must be populated. Equation 9 shows the calculation for the RT value based on the desired switching frequency. The curve in Figure 7-8 shows the RT value that corresponds to a given switching frequency for the TPS7H502x and TPS7H503x. Note that for the TPS7H503x, the equation and curve are applicable up to a switching frequency of 500kHz.

$$RT = \frac{112390}{f_{SW}} - 14.2 \tag{9}$$

where:

- RT is in kΩ
- f_{sw} is in kHz

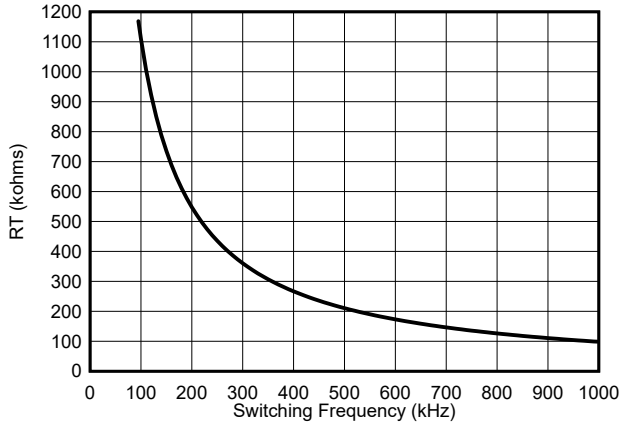

Figure 7-8. RT vs Switching Frequency

7.3.9.2 External Synchronization Mode

The controller can be used in external synchronization mode by applying a clock to the SYNC pin. The external clock that is applied must be set to the desired switching frequency. The external clock must be in the range of 100kHz to 1MHz for TPS7H502x and 100kHz to 500kHz for TPS7H503x. It is recommended to use an external clock with 50% duty cycle. The controller will switch in phase with the clock signal that is applied at the SYNC pin during this mode. Note that the SYNC pin only operates as an input for the controller.

When operating in external synchronization mode, the RT pin must be populated with a resistor to AGND. The switching frequency set by the RT resistor should be within ±10% of the external clock frequency for TPS7H5020 and TPS7H5030. The switching frequency is 1:1 with the external clock frequency. In the event that the controller is operating in internal oscillator mode before the application of the clock on the SYNC pin, it will take approximately 2-5 cycles after the clock is applied before the detection and switchover is made. If operating in external synchronization mode and the clock is lost, it takes approximately 2-5 cycles for the detection to be made, after which the switch to the internal oscillator will occur.

Copyright © 2026 Texas Instruments Incorporated

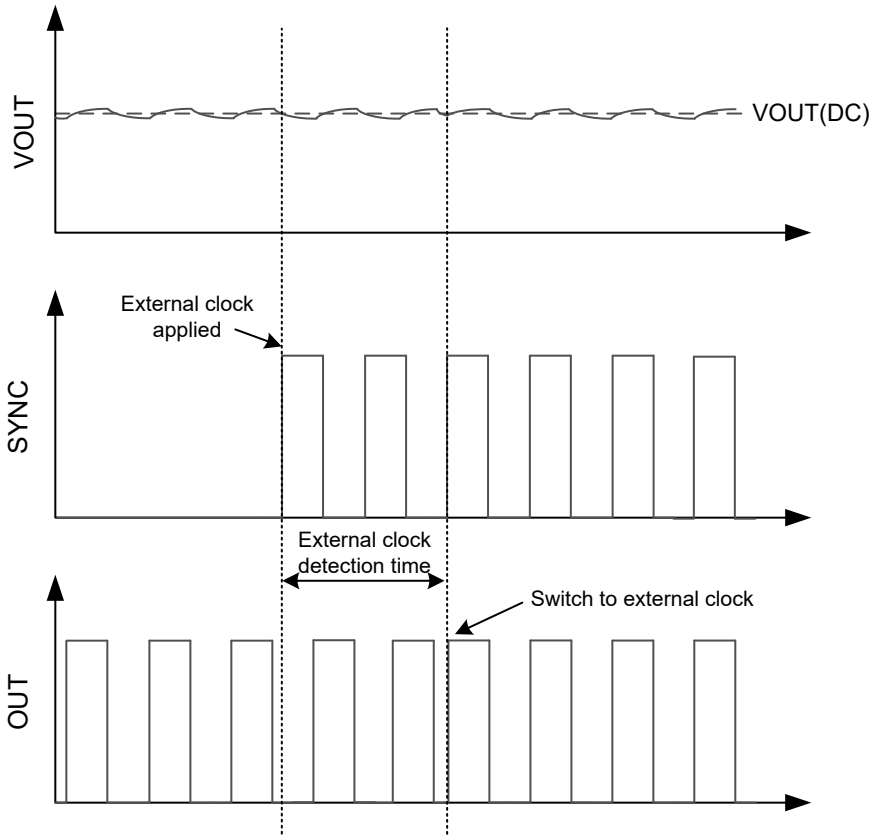

Figure 7-9. Internal to External Clock Transition

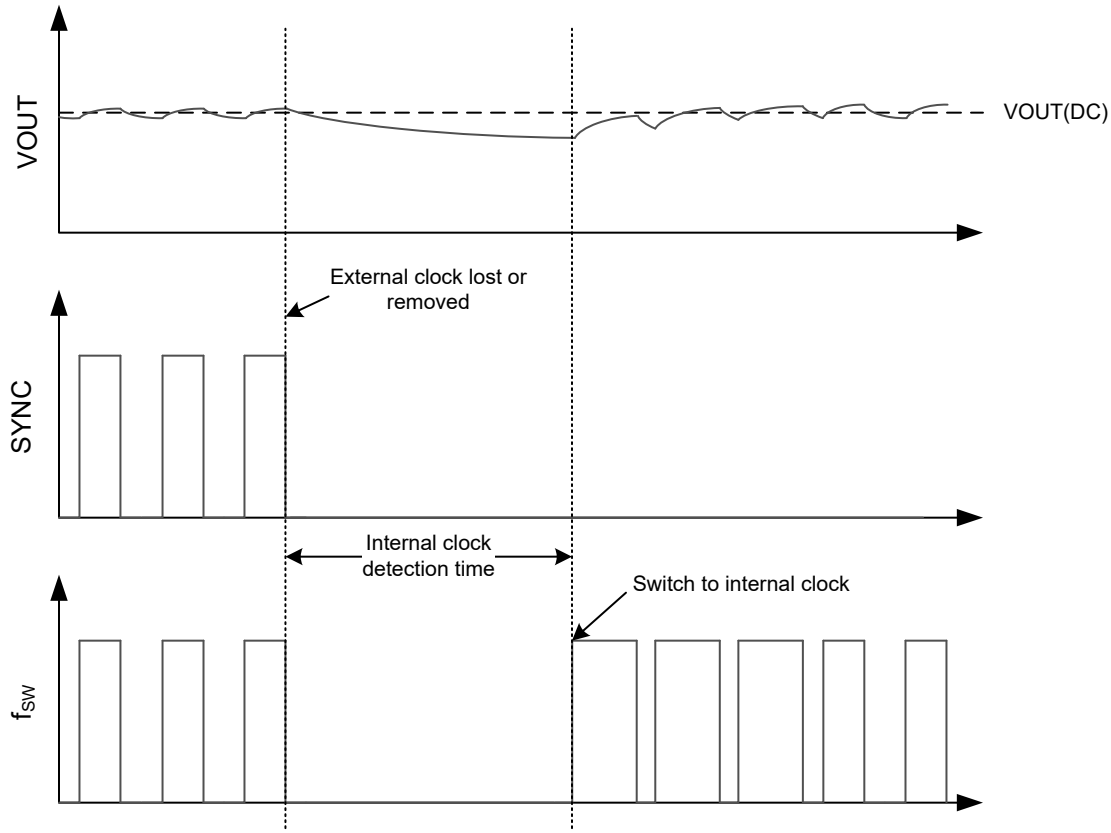

Figure 7-10. External to Internal Clock Transition

7.3.9.2.1 External Synchronization with TPS7H5021 and TPS7H5031

When utilizing the TPS7H5021 or TPS7H5031 in external synchronization mode, there are a few key operation differences that need to be implemented to maintain the 50% duty cycle limit (DCL) maximum. As indicated in *External Synchronization Mode*, the external clock needs a 50% duty cycle for best performance in all applications. However, while the allowable tolerance of this duty cycle is ±10% for the TPS7H5020 and TPS7H5030, the duty cycle for this clock must be more precisely controlled with the TPS7H5021 and TPS7H5031. Specifically, when using the TPS7H5021 or TPS7H5031 at 100kHz to 200kHz, the duty cycle for the external clock needs to remain between 49% and 51% to maintain a 50% DCL maximum. Above 200kHz, the duty cycle range can vary between 48% and 52%.

Furthermore, for all external synchronization use cases, the RT pin must still be populated with a resistor to AGND. This allows for the converter to maintain switching before a clock is applied, or in the event of clock loss. However, if the user is planning for a switching frequency greater than 200kHz, the value of the RT resistor varies slightly compared to the typical RT resistor selection as detailed in *Internal Oscillator Mode*. The user needs to select a resistor that is roughly 30% higher than what is yielded using Equation 9.

$$RT \approx 1.3 \times \left[\frac{112390}{f_{SW}} - 14.2\right] \tag{10}$$

Example values for RT selection for different external synchronization frequencies are shown in Table 7-2.

Table 7-2. Suggested RT Values for TPS7H5021 External Synchronization Mode

EXTERNAL SYNCHRONIZATION FREQUENCY	SUGGESTED RT VALUE
100kHz	1.18MΩ - same as TPS7H5020 and TPS7H5030
200kHz	732kΩ
500kHz	274kΩ

Copyright © 2026 Texas Instruments Incorporated

Table 7-2. Suggested RT Values for TPS7H5021 External Synchronization Mode (continued)

EXTERNAL SYNCHRONIZATION FREQUENCY	SUGGESTED RT VALUE
1MHz (for TPS7H5021 only)	130kΩ

Note that the primary implication of the updated resistor selection is that when the clock is not applied, the controller switches at a lower frequency as dictated by this new RT value. If there is a significant amount of time to be spent operating without the external clock applied, the user needs to evaluate the impact of this lower switching frequency on the overall system design. A summary of requirements for using external synchronization for the TPS7H5021 and TPS7H5031 in Table 7-3.

Table 7-3. External Synchronization Guidelines for TPS7H5021 and TPS7H5031

TARGET FREQUENCY	ALLOWABLE CLOCK DUTY CYCLE RANGE	RT RESISTOR SELECTION
< 200kHz	49% to 51%	Per Equation 9 - same as TPS7H5020 and TPS7H5030
≥ 200kHz	48% to 52%	Per Equation 10

7.3.10 Duty Cycle Limit

The TPS7H5020 and TPS7H5030 controllers have a nominal 100% maximum duty cycle. In this controller, the output is capable of 100% duty cycle, but users are advised to impose a maximum duty cycle based on the controller minimum off-time as described in *Minimum On-Time and Off-Time*.

The TPS7H5021 and TPS7H5031 controllers have a nominal 50% maximum duty cycle. Refer to *Specifications* for the specifications related to this duty cycle limit. Note that if the external synchronization oscillator mode is used with this device, users are advised to provide an external clock with a precise 50% duty cycle to make sure that the device specifications are met. Using an external clock with a duty cycle beyond the advised range can result in an under-performing maximum duty cycle limit. Refer to *External Synchronization with TPS7H5021 and TPS7H5031* for additional details.

Table 7-4. TPS7H502x and TPS7H503x Maximum Duty Cycles

DEVICE	MAXIMUM DUTY CYCLE (NOMINAL)
TPS7H5020 and TPS7H5030	100%
TPS7H5021 and TPS7H5031	50%

7.3.11 Minimum On-Time and Off-Time

The TPS7H502x and TPS7H503x outputs have a minimum on-time of approximately 135ns (typical). The minimum on-time is the smallest time duration for which the output remains in the on-state. As such, the minimum on-time can impose a restraint on the input-to-output conversion ratio of the power converter design. To overcome minimum on-time restrictions, careful selection of both the converter switching frequency and the transformer turns ratio (if applicable) is needed. For single switch forward, flyback, and boost converters in continuous conduction mode, the following equations can be used to check that the on time of the main power switch is sufficient for the intended design.

For forward:

$$t_{on_min} < \frac{V_{OUT} + V_D}{V_{IN} \times N_{SP} \times f_{SW}} \tag{11}$$

where:

- t_{on_min} is the minimum on-time of the controller
- V_{OUT} is the desired output voltage of the converter
- V_{IN} is the input voltage of the converter

- V_D is the forward voltage of the rectifier diode
- N_{PS} is the primary-to-secondary turns ratio of the transformer
- N_{SP} is the secondary-to-primary turns ratio of the transformer (the inverse of N_{PS})
- f_{SW} is the desired switching frequency of the converter

For flyback:

$$t_{on_min} < \frac{[V_{OUT} + V_f] \times \frac{N_P}{N_S}}{\left[V_{IN} + (V_{OUT} + V_f) \times \frac{N_P}{N_S}\right] \times f_{SW}} \tag{12}$$

For boost:

$$t_{on_min} < \frac{V_{OUT} + V_D - V_{IN}}{[V_{OUT} + V_D] \times f_{SW}} \tag{13}$$

Likewise, the minimum off-time also imposes restrictions on the converter operation. The minimum off-time is the smallest time duration that the output must remain off before subsequent turn-on. If the output is turned off during the switching cycle due to normal PWM operation, the output remains in the off-state for at least 40ns (typical). In most applications, the duty cycle of the converter during steady state remains well below 100% and allows for the output to be off much longer than this duration. The minimum off-time for the controller is not a concern for the TPS7H5021 and TPS7H5031 in which the duty cycle is restricted to a 50% nominal maximum.

There are circumstances in which the minimum off-time must be taken into consideration when using the TPS7H5020 or TPS7H5030 in power converter designs. Specifically, such cases occur when duty cycle is near 100% and turn-off happens close to the beginning of the next switching cycle. The intended off-time in these applications, as dictated by the converter feedback loop, is less than the minimum off-time of the controller. As such, the minimum off-time duration of the controller delays the output turn-on in the following switching cycle. While this must be taken into account at all operational frequencies, the effect is more pronounced at higher frequencies in which the minimum off-time constitutes a higher portion of the switching period. For example, at 1MHz switching frequency, the turn-on of the next cycle is delayed if the duty cycle surpasses 96% (nominal). To maintain the expected operation of the converter during steady-state, a maximum duty cycle can be imposed by the user on the converter design as shown in Equation 14.

$$D_{MAX} < 1 - t_{off_min} \times f_{SW} \tag{14}$$

where:

- D_{MAX} is the recommended maximum converter duty cycle to avoid delayed turn-on in the next cycle
- t_{off_min} is the minimum off-time of the controller
- f_{SW} is the converter switching frequency

7.3.12 Pulse Skipping

To prevent converter operational issues related to the minimum on-time of the controller during start-up and transient periods, specifically during high frequency operation, a pulse skipping mode has been implemented for the TPS7H502x and TPS7H503x controllers. During this mode, the output stops switching periodically. Having a minimum on-time that is too long in duration during high frequency operation can lead to an issue such as current runaway during the soft-start period. Pulse skipping allows for overcoming this issue by reducing the peak current during the start-up period. In high frequency converter designs where the V_{IN} to V_{OUT} ratio of the converter can lead to required duty cycles that are less than the minimum on-time, the controller output skips pulses to maintain the required output voltage. Pulse skipping occurs when both of the following conditions are present:

- The voltage at the COMP pin is less than 0.3V at the rising edge of the system clock
- The previous duty cycle was less than 50%

Copyright © 2026 Texas Instruments Incorporated

Note that for the TPS7H5021 and TPS7H5031, the duty cycle is always less than 50% so only the first condition is necessary to initiate the pulse skipping.

7.3.13 Leading Edge Blank Time

After OUT goes high, a leading edge blank time is implemented to prevent transients and noise on the sensed current waveform from being detected by the current sensing loop after the initial turn-on of the primary power switch. The leading edge blank time is fixed at 30ns (typical). An RC filter can also be used at the CS_ILIM pin to further remove any noise, provided that the cutoff frequency is sufficiently larger than the switching frequency of the converter. The general rule-of-thumb is that the target cutoff is 10× the switching frequency.

7.3.14 Current Sense and PWM Generation (CS_ILIM)

The CS_ILIM pin is driven by a signal representative of the main switch current of the power converter. The current signal has to have compatible input range of the COMP pin. As shown in Figure 7-11, the COMP pin voltage is used as the reference for the peak current. The output of the controller, OUT, is turned on by the internal clock signal and turned off when the peak of the sensed current signal reaches the COMP/CCSR pin voltage (which is approximately COMP/2). Note that this peak sensed current signal that is compared to COMP/CCSR at the PWM comparator contains an offset voltage of 150mV. The CS_ILIM pin is also used to configure the current limit for the controller. If slope compensation is implemented using the RSC pin, then the slope compensation ramp is subtracted from the COMP/CCSR signal, and turn-off of OUT occurs when the peak sensed current intersects the slope-compensated COMP/CCSR voltage. In instances which the user desires to bypass the internal error amplifier and drive COMP externally, the usable voltage range of the pin is approximately up to 2.3V. Since the CS_ILIM threshold for activating current limit is 1V and COMP is scaled down by CCSR, any external voltage applied to COMP that is greater than 2.3V is beyond the voltage to which the PWM comparator and feedback loop react.

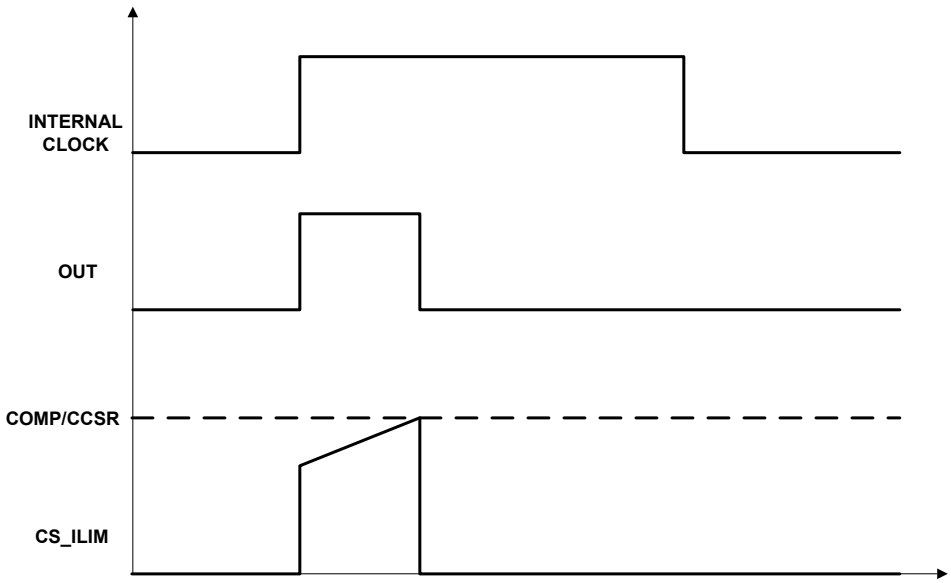

Figure 7-11. Peak Current Mode Control and PWM Generation

A resistor from CS_ILIM to AGND is used to detect current for both proper PWM operation and overcurrent protection. The current limit threshold V_{CS_ILIM}, is specified as 1V (nominal) in the electrical specifications. This indicates that when the voltage on this pin reaches this threshold, the device enters current limiting and turns off the output (OUT). Equation 15 shows the calculation for determining the value of the sense resistor for a selected current limit.

$$R_{CS} = \frac{V_{CS_ILIM}}{I_{LIM}} \tag{15}$$

Note that the value of I_{LIM} has to account for where and how the current is being sensed. In the case of an isolated converter using primary-side control with the sense resistor between source of primary FET to AGND, I_{LIM} must be calculated appropriately with respect to the load current. Regardless of the topology, the user can make sure that there is sufficient margin between the peak current during normal operation and the overcurrent trip point when determining the value of R_{CS}.

7.3.15 Gate Driver Output

The TPS7H502x can be used to drive power semiconductor devices that require a gate voltage from 4.5V to 14V, making the controller acceptable for both silicon MOSFET and GaN FET based power converters. The TPS7H503x is designed for driving devices with a 8V to 14V gate voltage. The gate driver stage of each controller has split outputs. These outputs are OUTH and OUTL, which are the sourcing and sinking outputs, respectively. These split outputs offer the flexibility to adjust the turn-on and turn-off speed independently by placing additional resistance to either the turn-on or turn-off path of the power device that is being driven. These outputs are capable of both sourcing and sinking 1.2A (typical) at 12V input on PVIN.

7.3.16 Unpowered Voltage Clamp

The TPS7H502x and TPS7H503x include a voltage clamp on the gate driver output. This clamp is active only when VIN is less than approximately 2V. With low voltage on VIN, the internal OUTL driver is not adequately powered and thus is incapable of actively pulling the driver output low. This potentially leaves the driver output in a high-impedance state, and the unpowered voltage clamp was added to mitigate this issue. This unpowered clamp is only operational while the controller is disabled.

The bus voltage VBUS of the converter can begin to rise while the controller input VIN is low. Without a sufficiently low impedance between OUTL and PGND, the slew rate (dV/dt) of the bus voltage can cause an unintentional turn-on of the FET through the gate-drain capacitance C_{GD}. The induced current through C_{GD} can charge the gate-source capacitance C_{GS} above the gate-source threshold of the FET, enabling undesired current flow from VBUS to PGND. The unpowered voltage clamp limits the voltage at the gate of the FET until such time as the driver has sufficient voltage and the controller is enabled. The voltage clamp values can be viewed in the *Specifications* table. After the controller is enabled, the voltage clamp is deactivated and does not interfere with the normal operation of the controller and driver. Note that the criteria for deactivating the clamp are the same as those required for start-up of the device, as outlined in *Start-Up*. An external pull-down resistor can be used between OUT to PGND as a supplement to the unpowered voltage clamp to further mitigate issues related to unintentional turn-on. A pull-down resistor in the range of 10kΩ to 50kΩ is recommended, if used. Note that the addition of the external resistor slightly increases the quiescent and operating currents for the device, with a smaller resistor causing a larger increase in these currents.

Copyright © 2026 Texas Instruments Incorporated

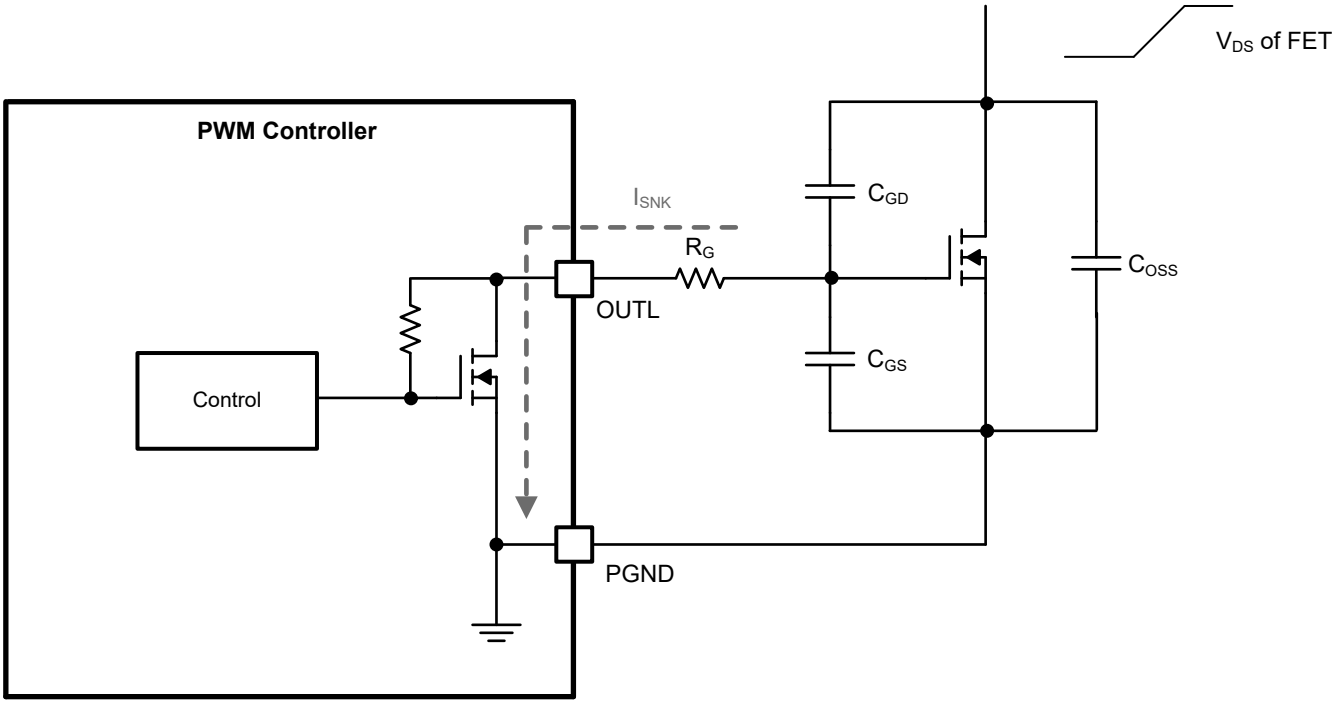

Figure 7-12. Unpowered Voltage Clamp

7.3.17 Sourcing Driver Return (OUTH_REF)

The return for the sourcing driver (OUTH) stage of the driver is pinned out to OUTH_REF so that a 220nF external capacitor can be connected during certain operating conditions. The voltage at OUTH_REF is nominally 6V less than that at PVIN. Allowing for an external capacitor connection between this pin and PVIN not only improves the transient performance of the driver, but also provides mitigation against radiation induced single-event transients (SETs). Note that the OUTH_REF capacitor is only needed when the external voltage applied at PVIN is greater than or equal to 6V. When PVIN is less than 6V, OUTH_REF can be directly connected to PGND. Note that for the TPS7H503x devices, in which the minimum recommended operating condition for PVIN is 8V, the 220nF capacitor between OUTH_REF and PVIN is always needed.

Table 7-5. OUTH_REF Connections

DRIVER INPUT VOLTAGE	CONFIGURATION
PVIN < 6V	Connect OUTH_REF to PGND
PVIN ≥ 6V	Connect a 220nF capacitor between OUTH_REF and PVIN

7.3.18 Slope Compensation (RSC)

When utilizing peak current mode control in switching power converter design, the converter can enter into an unstable state when the duty cycle for the main power switch rises above 50%. Basically, the converter is in a state where the error between the peak current and average current increases with each subsequent switching cycle. This instability, known as subharmonic oscillation, can be mitigated by adding slope compensation. For the TPS7H502x and TPS7H503x, the slope compensation is in the form of a voltage ramp that is subtracted from the error amplifier output divided down by the parameter CCSR (COMP to CS_ILIM ratio). The minimum slope compensation for stability over the entire duty cycle range is equal to 0.5 × *m*, where *m* is the inductor falling current slope. The recommended slope compensation is 1 × *m*, as any increase above this value does not improve stability.

For the forward converter and boost converter, the slope compensation can be set equal to the downward slope of the output inductor current. For the flyback converter, the slope compensation is calculated using the

downward slope of the current in the flyback transformer. In the isolated topologies, note that the sensed current waveform also needs to take into account the turns ratio of the transformer.

For forward:

$$SC = \frac{V_{OUT} \times R_{CS} \times A_{CS}}{L_{OUT} \times N_{PS}} \tag{16}$$

For flyback:

$$SC = \frac{V_{OUT} \times R_{CS} \times A_{CS}}{L_{PRI} \times N_{PS}} \tag{17}$$

For boost:

$$SC = \frac{[V_{OUT} - V_{IN}] \times R_{CS} \times A_{CS}}{L} \tag{18}$$

where:

- SC is the slope compensation value in V/µs
- L_{OUT} is the output inductor value in µH (forward)
- L_{PRI} is the primary inductance value in µH (flyback)
- L is the inductor value in µH (boost)
- N_{PS} is the primary-to-secondary turns ratio
- R_{CS} is the value of the current sense resistor in Ω
- A_{CS} is the gain associated with the current sense stage, including the current sense amplifier and transformer, if used
- V_{OUT} is the converter output voltage
- V_{IN} is the converter input voltage

For the TPS7H502x and TPS7H503x controllers, a resistor from the RSC pin to AGND can be used to set the desired slope compensation. Equation 19 shows the calculation for determining the proper resistor value for RSC.

$$RSC = \frac{29.5}{SC^{1.07}} \tag{19}$$

where:

- SC is the desired slope compensation is V/µs
- RSC is in kΩ

7.3.19 Frequency Compensation

Since the TPS7H502x and TPS7H503x use a transconductance error amplifier (OTA), either Type 2A or Type 2B frequency compensation can be applied. The primary difference between the two compensation schemes is that Type 2A has an additional capacitor C_{HF} in parallel with R_{COMP} and C_{COMP} to provide high-frequency noise attenuation. These components are connected between the COMP pin of the controller, which is the OTA output, and AGND.

Copyright © 2026 Texas Instruments Incorporated

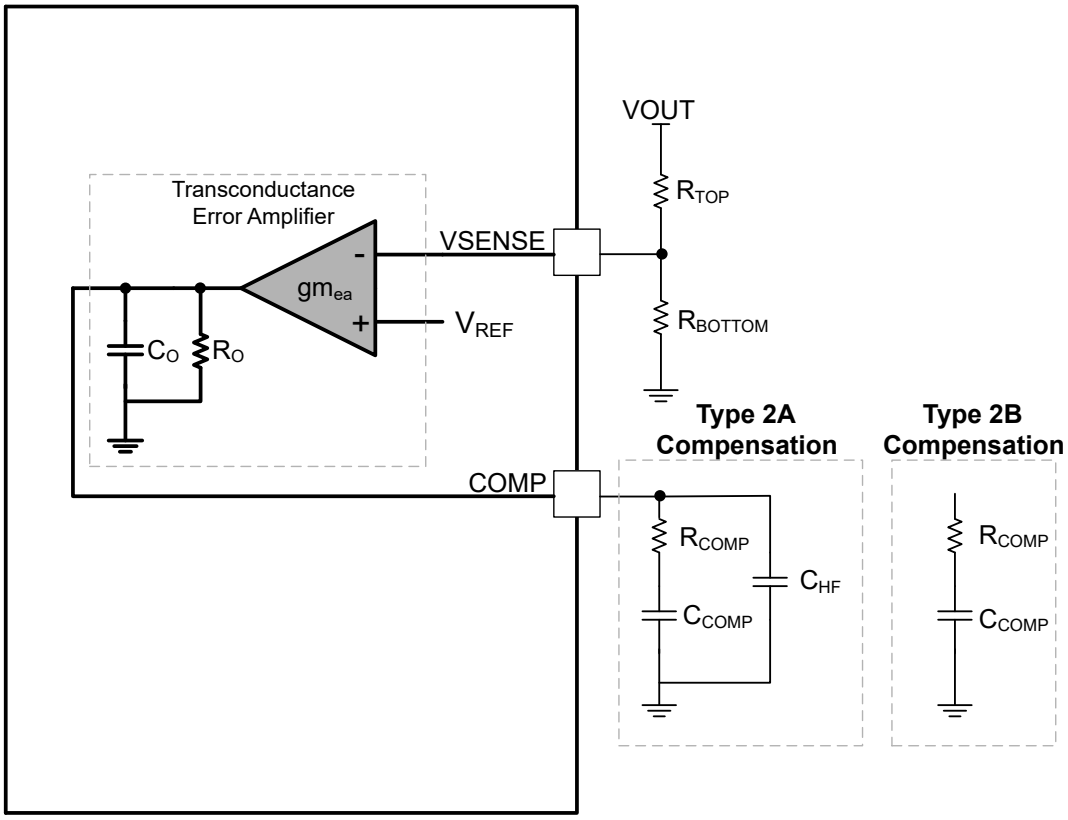

Figure 7-13. TPS7H502x and TPS7H503x Frequency Compensation Options

For the topologies supported by the TPS7H502x and TPS7H503x, the following procedure and equations can be used to select the compensation components. All parameters in the equations are in standard units unless otherwise indicated (that is, H for inductance, F for capacitance, Hz for frequency, and so on).

1. Select the desired crossover frequency (f_c) for the converter. Note that for boost and flyback converters, there is a right-half-plane (RHP) zero, which limits the target crossover frequency of the converter. For these topologies, the crossover is recommended to be between one-fourth to one-tenth of the RHP zero frequency. For the forward converter, the crossover frequency is recommended to be no more than one-tenth of the switching frequency.
2. Calculate the transconductance G_M of the power stage.
   - For the forward converter:

$$G_M = \frac{N_{PS}}{A_{CS} \times R_{CS}} \tag{20}$$

   - For the flyback converter:

$$G_M = \frac{[1 - D_{MAX}] \times N_{PS}}{A_{CS} \times R_{CS}} \tag{21}$$

   - For the boost converter:

$$G_M = \frac{1 - D_{MAX}}{A_{CS} \times R_{CS}} \tag{22}$$

   where:
   - N_{PS} is the primary-to-secondary turns ratio of the transformer
   - A_{CS} is the gain associated with the current sense stage
   - R_{CS} is the current sense resistor value in Ω

- D_{MAX} is the maximum duty cycle for the application

3. Calculate the gain A_{VM} of the error amplifier network to achieve the target crossover frequency:

$$A_{VM} = \frac{2\pi \times f_C \times C_{OUT}}{G_M} \tag{23}$$

where:

- f_C is the target crossover frequency
- C_{OUT} is converter output capacitance
- G_M is the power stage transconductance

4. Calculate R_{COMP} based on the required gain A_{VM}, the error amplifier transconductance g_{mea}, and the feedback resistor values:

$$R_{COMP} = \frac{A_{VM}}{g_{mea} \times K_{FB}} \tag{24}$$

where:

$$K_{FB} = \frac{R_{BOTTOM}}{R_{BOTTOM} + R_{TOP}} \tag{25}$$

5. The zero of the error amplifier network is recommended to be set equal to approximately one-tenth of the target crossover frequency:

$$f_{ZEA} = \frac{1}{2\pi \times R_{COMP} \times C_{COMP}} = \frac{f_C}{10} \tag{26}$$

therefore:

$$C_{COMP} = \frac{1}{2\pi \times 0.1 \times f_C \times R_{COMP}} \tag{27}$$

6. Set the high frequency pole of the compensator. For the forward converter, this can be set equal to frequency of the ESR zero for the converter. For the boost and flyback, this can be set to the lower of the ESR zero and RHP zero.

$$f_{HF} = \frac{1}{2\pi \times R_{COMP} \times C_{HF}} = f_{Z_ESR} \text{ or } f_{RHPZ} \tag{28}$$

therefore:

$$C_{HF} = \frac{1}{2\pi \times f_{Z_ESR} \times R_{COMP}} \tag{29}$$

or:

$$C_{HF} = \frac{1}{2\pi \times f_{RHPZ} \times R_{COMP}} \tag{30}$$

Note that the procedure outlined is intended as a starting point for component selection. Frequency compensation is often an iterative process and the best values are typically obtained through hardware testing of the converter.

7.3.20 Thermal Shutdown

The internal thermal shutdown circuitry forces the device to stop switching if the junction temperature exceeds 185°C (typical). The device reinitiates the power-up sequence when the junction temperature drops below 170°C (typical).

7.4 Device Functional Modes

The TPS7H502x and TPS7H503x series use fixed frequency, peak current mode control. The controller regulates the peak current and duty cycle of the converter. The internal oscillator initiates the turn-on of the gate driver output for the power switch. The external power switch current is sensed through an external resistor

Copyright © 2026 Texas Instruments Incorporated

and compared via internal comparator. The voltage generated at the COMP pin is stepped down via internal resistors. When the sensed current reaches the stepped down COMP voltage, the power switch is then turned off.

8 Application and Implementation

Note

Information in the following applications sections is not part of the TI component specification, and TI does not warrant its accuracy or completeness. TI's customers are responsible for determining suitability of components for their purposes, as well as validating and testing their design implementation to confirm system functionality.

8.1 Application Information

The TPS7H502x and TPS7H503x are radiation-hardened PWM controllers with integrated gate drivers. The driver has an input voltage range of 4.5V to 14V for the TPS7H502x, with the range being 8V to 14V for the TPS7H503x. The TPS7H502x offers a programmable switching frequency up to 1MHz, while the TPS7H503x can be programmed up to 500kHz. Furthermore, the integrated driver of the TPS7H502x can be configured to operate with GaN FETs by utilizing the programmable LDO of the controller and making a connection from output to PVIN. A higher voltage input up to 14V can be used at PVIN for both the TPS7H502x and TPS7H503x to use the driver in conjunction with silicon MOSFETs. The controller can support a number of different power supply topologies, including but not limited to: flyback, forward, and boost.

8.2 Typical Application

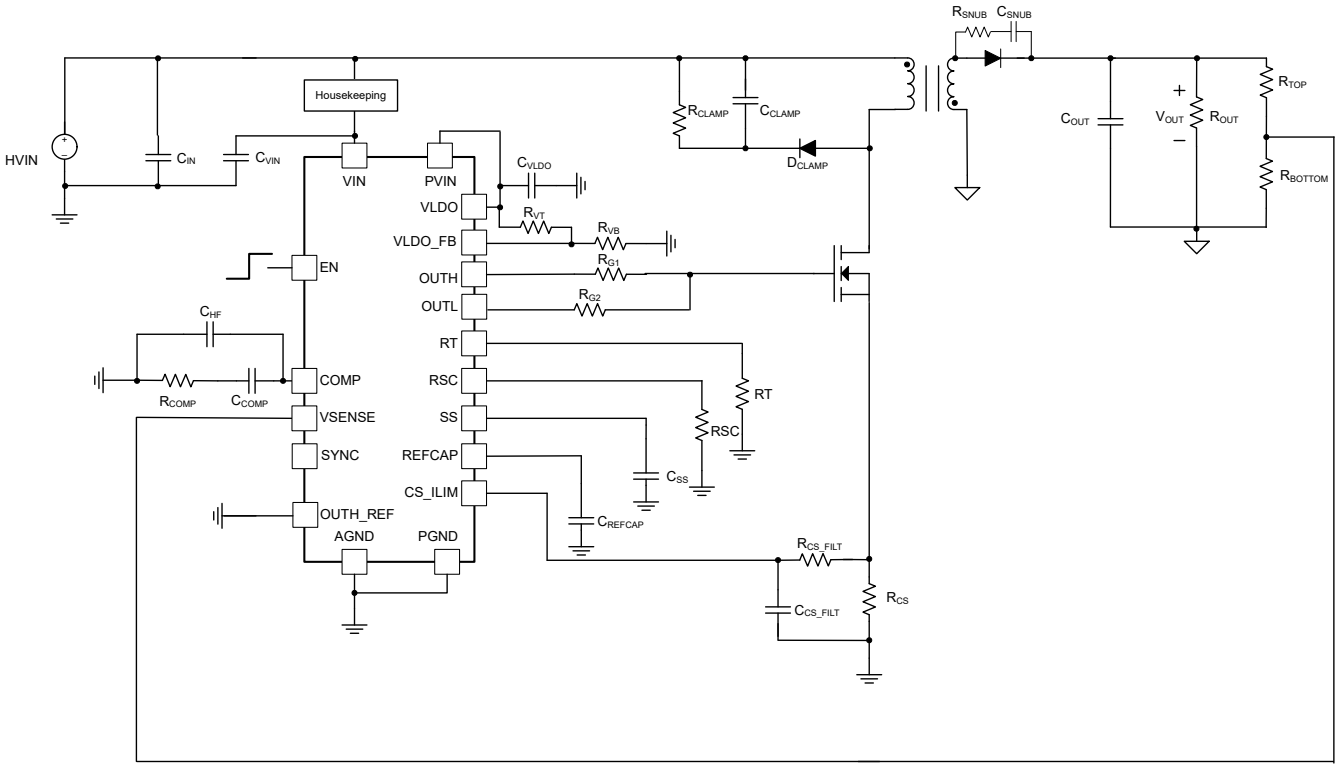

Figure 8-1. Typical Application Schematic for TPS7H5020

8.2.1 Design Requirements

The provided example details the design of a flyback converter using a GaN power semiconductor device as the primary switching FET. The intent is to show how to determine the component selection for the TPS7H5020 as well as key components of the converter power stage.

Copyright © 2026 Texas Instruments Incorporated

Table 8-1. Design Parameters

DESIGN PARAMETER	VALUE
Input voltage range	22V to 36V, 28V nominal
Output voltage	5V ±10%
Maximum output current	4A
Switching frequency	500kHz
Target bandwidth	≅4kHz
Full load step (4A) transient response	≤ 375mV

8.2.2 Detailed Design Procedure

8.2.2.1 Switching Frequency

The flyback converter was designed to operate at a switching frequency of 500kHz. For space-grade converter designs, the benefits of GaN power devices over silicon counterparts are readily apparent at this switching frequency. Using Equation 31, the required RT resistor for the desired frequency can be determined. Note that the value of f_{SW} is in kHz and RT is given in kΩ.

$$RT = \frac{112390}{f_{SW}} - 14.2 \tag{31}$$

$$RT = \frac{112390}{500} - 14.2 = 210.5k\Omega \tag{32}$$

A standard resistor value of 210kΩ is good for the design. A slightly lower value of 205kΩ was used due to availability.

8.2.2.2 Output Voltage Programming Resistor Selection

The converter has an output voltage of 5V. Select the feedback resistor divider connected to VSENSE to correspond to the desired V_{OUT}. With a resistor of 10kΩ selected for R_{TOP}, the value of the bottom resistor in the divider can be calculated.

$$R_{BOTTOM} = \frac{V_{REF}}{V_{OUT} - V_{REF}} \times R_{TOP} \tag{33}$$

$$R_{BOTTOM} = \frac{0.6V}{5V - 0.6V} \times 10k\Omega = 1.36k\Omega \tag{34}$$

The values for R_{TOP} and R_{BOTTOM} needed are 10kΩ and 1.37kΩ, respectively.

8.2.2.3 Driver PVIN Configuration

For the design example, the intended power semiconductor device is a GaN FET. As such, VLDO will be connected to PVIN of the driver. VLDO can be programmed from 4.5V to 5.5V, and in this instance a nominal drive voltage of 5V is selected. In order to program VLDO for 5V operation, Equation 35 is used to select the proper resistor between VLDO_FB and GND.

$$R_{VB} = \frac{V_{REFCAP}}{V_{LDO} - V_{REFCAP}} \times R_{VT} \tag{35}$$

$$R_{VB} = \frac{1.225V}{5V - 1.225V} \times 10k\Omega = 3245\Omega \tag{36}$$

The value of R_{VB} is selected as 3.24kΩ. Since PVIN is connected to VLDO and less than 6V, OUTH_REF should be connected directly to GND per Table 7-5.

Note that the programmable VLDO output can be used to tune the gate voltage in accordance with the particular GaN FET that is being used. Furthermore, if there is problematic gate voltage overshoot observed due to board parastics or improper layout, then reducing the gate voltage using the programmable VLDO output can potentially be an option for mitigation. However, be aware that adjusting the gate voltage for this reason can also have other impacts on the overall system, such as an increase in the GaN FET on-resistance leading to a possible decrease in converter efficiency.

8.2.2.4 Soft-Start Capacitor Selection

The soft-start time was chosen to be sufficiently long to limit inrush current for this design. The value of the soft-start capacitor selected was 33nF. Based on this value, the soft-start time can be calculated.

$$t_{SS} = \frac{C_{SS} \times V_{REF}}{I_{SS}} \tag{37}$$

$$t_{SS} = \frac{33nF \times 0.6V}{2.8\mu A} = 7.07ms \tag{38}$$

The soft-start time is approximately 7.1ms for the design.

8.2.2.5 Transformer Design

The turns ratio and primary inductance of the transformer are determined based on the target specifications of the converter. The turns ratio is calculated based on a maximum duty cycle of 35% targeted for the design.

$$N_{PS_MAX} = \frac{V_{IN_MIN} \times D_{MAX}}{[V_{OUT} + V_D] \times [1 - D_{MAX}]} \tag{39}$$

$$N_{PS_MAX} = \frac{22V \times 0.35}{[5V + 0.7] \times [1 - 0.35]} = 2.08 \tag{40}$$

A turns ratio of 2 is selected for the design. Based on the actual turns ratio, the minimum and maximum duty cycle can be calculated.

$$D_{MIN} = \frac{[V_{OUT} + V_D] \times N_{PS}}{[V_{OUT} + V_D] \times N_{PS} + V_{IN_MAX}} \tag{41}$$

$$D_{MIN} = \frac{[5V + 0.7V] \times 2}{[5V + 0.7V] \times 2 + 22V} = 0.241 \tag{42}$$

$$D_{MAX} = \frac{[V_{OUT} + V_D] \times N_{PS}}{[V_{OUT} + V_D] \times N_{PS} + V_{IN_MIN}} \tag{43}$$

$$D_{MAX} = \frac{[5V + 0.7V] \times 2}{[5V + 0.7V] \times 2 + 22V} = 0.341 \tag{44}$$

The primary inductance is calculated based on a 20% current ripple.

$$L_P = \frac{{V_{IN_MAX}}^2 \times {D_{MIN}}^2}{V_{OUT} \times I_{OUT} \times f_{SW} \times \%_{RIPPLE}} \tag{45}$$

$$L_P = \frac{36V^2 \times 0.24^2}{5V \times 4A \times 500kHz \times 0.2} = 37.3\mu H \tag{46}$$

The primary inductance selected for the actual design is 30µH, which results in an actual ripple of approximately 25%. The following equations detail how to calculate transformer primary and secondary currents that are critical for proper design of the transformer. These equations are useful for defining the physical structure of the transformer.

Copyright © 2026 Texas Instruments Incorporated

$$I_{RIPPLE} = \frac{V_{OUT} \times I_{OUT} \times \%_{RIPPLE}}{V_{IN_MAX} \times D_{MIN}} \quad (47)$$

$$I_{RIPPLE} = \frac{5V \times 4A \times 0.25}{36V \times 0.24} = 0.58A \quad (48)$$

$$I_{PRI_PEAK} = \frac{V_{OUT} \times I_{OUT}}{V_{IN_MIN} \times D_{MAX} \times \eta} + \frac{I_{RIPPLE}}{2} \quad (49)$$

$$I_{PRI_PEAK} = \frac{5V \times 4A}{22V \times 0.35 \times 0.85} + \frac{0.58A}{2} = 3.35A \quad (50)$$

$$I_{PRI_RMS} = \sqrt{D_{MAX} \times \left[\frac{V_{OUT} \times I_{OUT}}{V_{IN_MIN} \times D_{MAX}}\right]^2 + \frac{I_{RIPPLE}^2}{3}} \quad (51)$$

$$I_{PRI_RMS} = \sqrt{0.35 \times \left[\frac{5V \times 4A}{22V \times 0.35}\right]^2 + \frac{0.58A^2}{3}} = 1.57A \quad (52)$$

$$I_{SEC_RMS} = \sqrt{[1 - D_{MAX}] \times I_{OUT}^2 + \frac{[I_{RIPPLE} \times N_{PS}]^2}{3}} \quad (53)$$

$$I_{SEC_RMS} = \sqrt{[1 - 0.35] \times 4A^2 + \frac{[0.58A \times 2]^2}{3}} = 3.29A \quad (54)$$

8.2.2.6 Primary Power Switch Selection

In the flyback topology, the maximum voltage that can be applied at the drain of the FET is calculated according to Equation 55.

$$V_{DS} = [V_{IN_MAX} + V_L] + N_{PS} \times [V_{OUT} + V_D] \quad (55)$$

$$V_{DS} = [36V + 12V] + 2 \times [5V + 0.7V] = 59.4V \quad (56)$$

At a minimum, a 60V rated FET is needed for the application. Practically, a FET with a higher voltage rating needs to be selected to a llow for transient spikes and ringing. Furthermore, the current rating of the FET needs to be higher than the primary currents that were calculated in *Transformer Design*. The selected GaN device has a voltage rating of 200V, with a 22A current rating.

8.2.2.7 Output Diode Selection

The maximum voltage stress experienced by the diode on the secondary side can be calculated using Equation 57.

$$V_{D_STRESS} = V_{OUT} + \frac{V_{IN_MAX}}{N_{PS}} \quad (57)$$

$$V_{D_STRESS} = 5V + \frac{36V}{2} = 23V \quad (58)$$

The maximum expected voltage is 23V, but a higher rating needs to be selected to provide margin by allowing for transient voltage spikes. Note that an RC snubber across the output diode is potentially required depending on the extent and magnitude of the ringing across the power diode at turn-off. The current rating of the diode needs to be sufficient to handle the maximum load current of the converter. The diode was selected to have ratings of 80V and 15A to provide significant margin above the maximum operating conditions.

8.2.2.8 RCD Clamp

Since the leakage inductance and parasitic capacitances in the converter and printed circuit board can create excessive ringing at the drain of the FET which can ultimately prove problematic, a RCD clamp is used to sufficiently dampen the magnitude and frequency of the ringing to well within the selected voltage rating of the FET.

Generally, these values are optimized during testing since the ringing is highly dependent on the printed circuit board parasitics. However, as a starting point, the following equations can be used to determine the value of the clamping resistor and capacitor, R_{CLAMP} and C_{CLAMP}, respectively, based on the desired allowable overshoot.

$$V_{CLAMP} = K_{CLAMP} \times N_{PS} \times [V_{OUT} + V_D] \tag{59}$$

The parameter K_{CLAMP} defines the target overshoot value. For example, set K_{CLAMP} to 1.5 for 50% allowable overshoot.

Next, the leakage inductance $L_{LEAKAGE}$ and peak primary current I_{PRI_PEAK} of the transformer can be used to approximate the clamp resistor. The clamp capacitor value can be determined thereafter. Note that ΔV_{CLAMP} defines the allowable ripple for the clamp capacitor as a percentage of the desired clamp voltage. For example, for 2% ripple set ΔV_{CLAMP} to 0.02.

$$R_{CLAMP} = \frac{V_{CLAMP}^2}{0.5 \times L_{LEAKAGE} \times I_{PRI_PEAK}^2 \times \frac{V_{CLAMP}}{V_{CLAMP} - N_{PS} \times [V_{OUT} + V_D]} \times f_{SW}} \tag{60}$$

$$C_{CLAMP} = \frac{1}{\Delta V_{CLAMP} \times V_{CLAMP} \times R_{CLAMP} \times f_{SW}} \tag{61}$$

8.2.2.9 Output Capacitance Selection

Generally, there are two different calculations that can be used to determine the output capacitance required for the converter. The first, shown in Equation 62 , determines the amount of output capacitance that is needed to meet the output voltage ripple requirements of the design. The first calculates the amount of capacitance required to meet the maximum allowable voltage deviation at the output in response to a worst-case load transient as shown in Equation 64. Once the two calculations are performed, the maximum of these should be chosen as the output capacitance for the design. The calculations are shown for target voltage ripple of 2% of the output voltage and maximum allowable voltage deviation of 7.5% of the output voltage.

$$C_{OUT} > \frac{I_{OUT} \times D_{MAX}}{V_{RIPPLE} \times f_{SW}} \tag{62}$$

$$C_{OUT} > \frac{4A \times 0.35}{100mV \times 500kHz} = 28\mu F \tag{63}$$

$$C_{OUT} > \frac{\Delta I_{STEP}}{2\pi \times \Delta V_{OUT} \times f_C} \tag{64}$$

$$C_{OUT} > \frac{4A}{2\pi \times 375mV \times 4kHz} = 424.4\mu F \tag{65}$$

Based on the calculations, at least 425µF of output capacitance is required. When selecting capacitors, consider any derating of capacitance that is needed to account for aging, temperature, and DC bias.

For space-grade converter designs, there is another consideration when selecting the output capacitance. This is the impact of radiation induced single event transients (SET). Single energetic particle strikes can lead to momentary variation in the PWM variation of the controller, which in turn can lead to output voltage transients in the converter. Thus, even though the value above provides a minimum value to account for voltage ripple and/or load transients, additional capacitance is likely needed for adequate SET mitigation. For the design example, approximately 470µF of total output capacitance was used.

An additional output filter can be used to further reduce the noise of the output stage if deemed necessary. This output filter consists of an additional inductor and a small amount of ceramic capacitance. The filter inductance is then located between the added ceramic capacitance and the bulk output capacitance that was determined to be required for the design. This approach can drastically reduce the output voltage ripple without significantly increasing the size and/or number of components required. The key for the secondary filter design is to choose the resonant frequency such that it is higher than the targeted crossover frequency yet well below the switching

Copyright © 2026 Texas Instruments Incorporated

frequency and ESR zero of the bulk output capacitance. Equation 66, Equation 67, and Equation 68 can be used to determine the ESR zero as well as the resonant frequency and attenuation of the additional output filter.

$$f_{resonant} = \frac{1}{2\pi \times L_f \times C_{OUT_BULK}} \tag{66}$$

$$f_{zero} = \frac{1}{2\pi \times C_{OUT_BULK} \times ESR_{BULK}} \tag{67}$$

$$Att_{fsw} = 40 \times \log_{10}\left[\frac{f_{SW}}{f_{resonant}}\right] - 20 \times \log 10 \times \frac{f_{SW}}{f_{zero}} \tag{68}$$

In the event that there is peaking at high frequencies due to the output filter, a resistor can be used to dampen this peaking effect. Equation 69 and Equation 70 can be used to determine the frequency of the peaking and the value of the resistor needed to provide adequate damping.

$$\omega_o = \frac{2 \times \left[C_{OUT_CER} + C_{OUT_BULK}\right]}{L_f \times C_{OUT_CER} \times C_{OUT_BULK}} \tag{69}$$

$$R_f = \frac{R_{OUT} \times L_f \times \left[C_{OUT_CER} + C_{OUT_BULK}\right] - \frac{L_f}{\omega_o}}{\frac{R_{OUT} \times \left[C_{OUT_CER} + C_{OUT_BULK}\right]}{\omega_o} - \left[L_f \times C_{OUT_CER}\right]} \tag{70}$$

8.2.2.10 Current Sense Resistor

There are considerations and tradeoffs that can be made when selecting the current sense resistor that is connected between CS_ILIM and GND. Generally, the resistor is simply selected such that the converter enters into cycle-by-cycle limiting at a selected maximum current. For example, if the sense resistor was chosen such that the overcurrent protection activates 125% of the maximum load current, this equates to 5A in this particular design. Using Equation 49, the corresponding peak primary current is roughly 4.1A. The corresponding value of R_{CS} can be found based on the following equation, where V_{CS_ILIM} is the current limit threshold of the controller:

$$R_{CS} = \frac{V_{CS_ILIM}}{I_{LIM}} \tag{71}$$

Users are recommended to note that in instances where the sense resistor is connected between the source of the primary FET and ground, that the voltage across the sense resistor can subtract from the total gate-source voltage that is applied to the FET. This is the case when the driver is also referenced to ground rather than the source of the FET. As such, when driving GaN FETs, the user must be mindful of the voltage drop across the sense resistor. When using the controller to drive GaN devices with PVIN connected to VLDO, the programmable VLDO output can be set to a higher voltage, resulting in a larger V_{GS} applied to the FET that compensates for the sense resistor voltage. If the risk of overcurrent is low, then the sense resistor can also be made small to minimize the R_{CS} voltage. For this design, the sense resistor was selected to be 100mΩ. This corresponds to a I_{LIM} value of approximately 10A in the primary GaN FET.

When the sense resistor is inserted in the gate drive current loop, there are a few considerations to be made:

- Choose a sense resistor that is as small as possible to mitigate the voltage offset created by the resistor
- Follow the best practices for GaN FET layout. Adding the sense resistor to the gate current loop increases the overall loop area, and the parastic inductance of the loop must be minimized as much as possible.
- As mentioned previously, the programmable VLDO output can be used to compensate for the voltage drop across the sense resistor, if desired.
- At higher currents and higher frequencies, the challenges posed by having the sense resistor in the gate loop can become more pronounced.

Although the controller does have leading edge blanking to reduce the likelihood of incorrect PWM or current operation due to noise spikes at FET turn-on, a low-pass RC filter is needed to further remove noise from the

sensed current signal. The cutoff frequency of the filter is recommended be at least a decade above the selected switching frequency.

8.2.2.11 Frequency Compensation Component Selection

The poles and zeros of the flyback converter can be determined with the following equations. Note that the flyback converter also has a right-half-plane zero.

$$f_{Z_ESR} = \frac{1 + D_{MAX}}{2\pi \times C_{OUT} \times R_{ESR}} \tag{72}$$

$$f_{Z_ESR} = \frac{1 + 0.35}{2\pi \times 470\mu F \times 4m\Omega} = 114.3kHz \tag{73}$$

$$f_P = \frac{1}{2\pi \times C_{OUT} \times \frac{V_{OUT}}{I_{OUT}}} \tag{74}$$

$$f_P = \frac{1}{2\pi \times 470\mu F \times \frac{5V}{4A}} = 270.9Hz \tag{75}$$

$$f_{RHPZ} = \frac{\frac{V_{OUT}}{I_{OUT}} \times [1 - D_{MAX}]^2}{2\pi \times \frac{L_{PRI}}{N_{PS}^2} \times D_{MAX}} \tag{76}$$

$$f_{RHPZ} = \frac{\frac{5V}{4A} \times [1 - 0.35]^2}{2\pi \times \frac{30\mu H}{2^2} \times 0.35} = 32.0kHz \tag{77}$$

Type 2A compensation network can be utilized in order to properly place the pole and zero of the error amplifier to achieve stability. Note that this compensation technique is for a flyback operating in continuous conduction mode. The crossover frequency is typically targeted to be anywhere from one-fourth of the RHP zero frequency to a full decade below. A crossover frequency of 4kHz was targeted for this design. The error amplifier network gain is set to achieve the target crossover frequency, which is dependent on R_{COMP}. The equation for R_{COMP}, as derived from Equation 21, Equation 23, and Equation 24, is shown in Equation 78. The calculation of K_{FB} is as shown in Equation 25.

$$R_{COMP} = \frac{2\pi \times f_C \times C_{OUT} \times A_{CS} \times R_{CS}}{[1 - D_{MAX}] \times N_{PS} \times K_{FB} \times g_m} \tag{78}$$

$$R_{COMP} = \frac{2\pi \times 4kHz \times 470\mu F \times 1 \times 0.1\Omega}{[1 - 0.35] \times 2 \times 0.12 \times 1750\frac{\mu A}{V}} = 4326.88\Omega \tag{79}$$

The error amplifier zero is set to one-tenth of the crossover frequency, which allows for selecting the value of C_{COMP}.

$$C_{COMP} = \frac{1}{2\pi \times 0.1 \times f_C \times R_{COMP}} \tag{80}$$

$$C_{COMP} = \frac{1}{2\pi \times 0.1 \times 4kHz \times 4.32k\Omega} = 91.96nF \tag{81}$$

Lastly, the high frequency pole is set to the lower of the ESR zero and the RHP zero. In this specific case, the RHP zero is lower.

$$C_{HF} = \frac{1}{2\pi \times f_{RHPZ} \times R_{COMP}} \tag{82}$$

Copyright © 2026 Texas Instruments Incorporated

$$C_{HF} = \frac{1}{2\pi \times 32kHz \times 4.32k\Omega} = 1.15nF \quad (83)$$

Using standard component values, the initial selected values for R_{COMP}, C_{COMP}, and C_{HF} were 4.32kΩ, 100nF, and 1nF, respectively. Note that these calculated values provide a starting point. The frequency compensation is often tuned during both simulation and testing to settle on the final compensation values of the design.

8.2.3 Application Curves

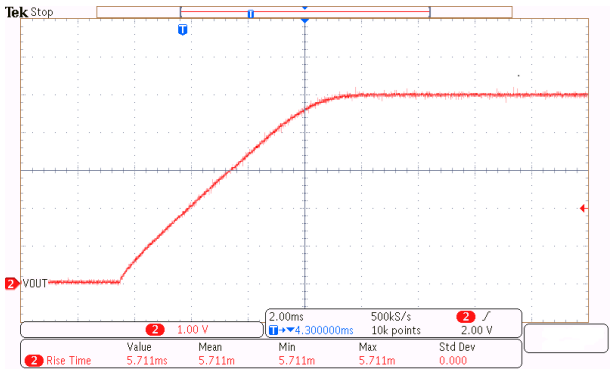

Figure 8-2. V_{OUT} Startup of Flyback Converter

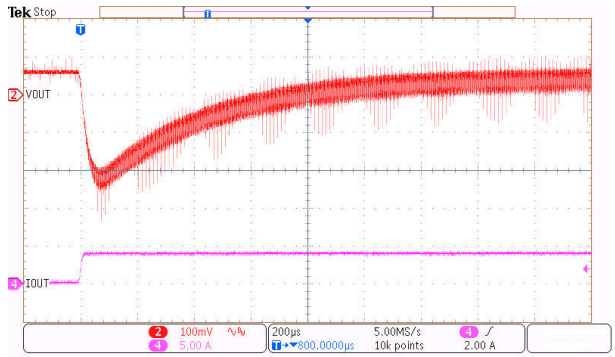

Figure 8-3. 4A Load Step Response for Flyback Converter

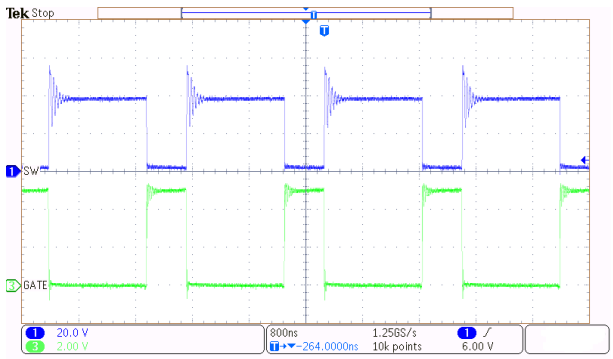

Figure 8-4. Gate and Switch Node Signal

8.2.4 Boost Converter

The TPS7H502x and TPS7H503x can be utilized in a non-synchronous boost configuration. The TPS7H5020 in a boost configuration is depicted in the simplified schematic in Figure 8-5.

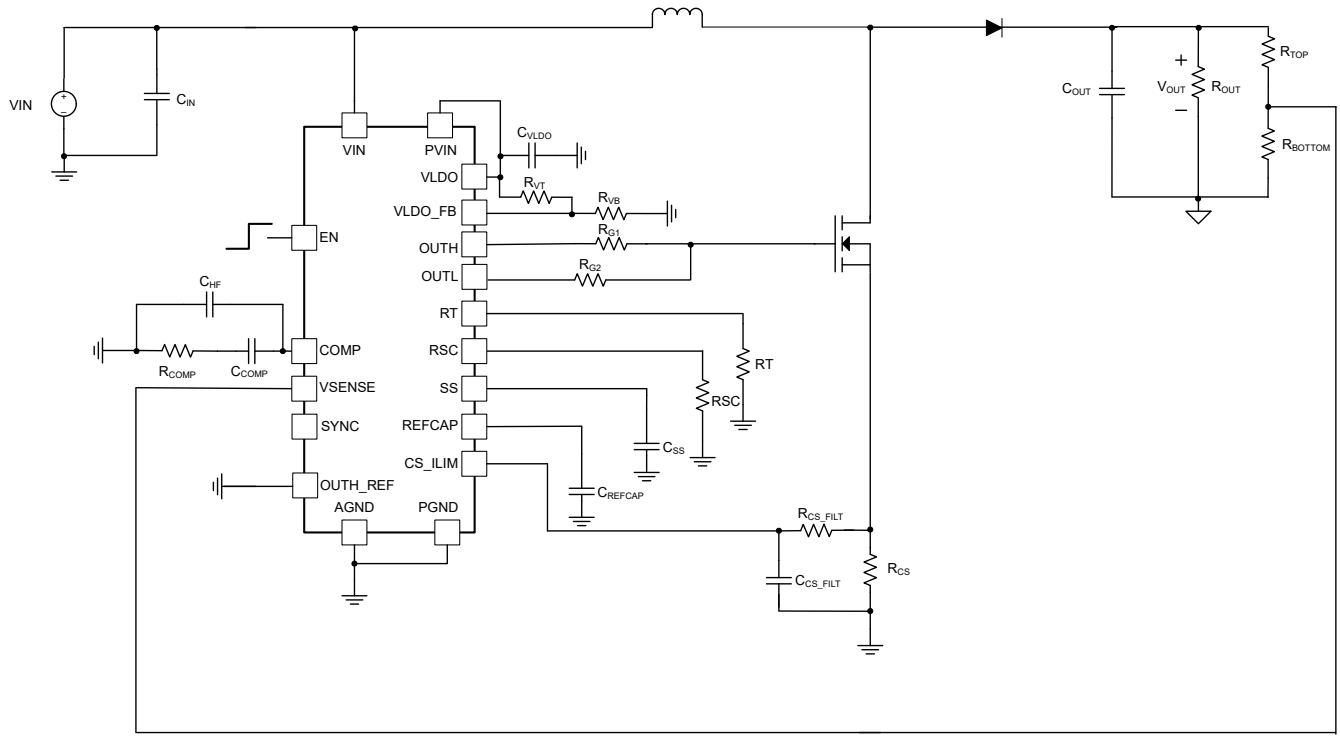

Figure 8-5. Simplified Schematic of Boost Converter Using TPS7H5020

The guidance for component selection specific to the TPS7H502x or TPS7H503x controller in the boost configuration is the similar to that as detailed in *Detailed Design Procedure*. The primary differences lie in the power stage component selection, which can be determined as detailed in Calculation of a Boost Converter's Power Stage. Furthermore, the compensation component selection is detailed for the boost converter in *Frequency Compensation*. Some of the key considerations for the boost converter are:

- The peak FET current for the boost converter is equal to the input current, not the load current. Size the FET appropriately to handle the input current for the application, which is higher than that at the load.
- There is a direct path between the input supply and load. A short circuit at the load can cause a large current to flow from input to output and lead to the output voltage being pulled down to the input voltage or below. If the converter must survive the short circuit, consider adding a disconnect switch between the input and output that can be opened during the fault condition. This switch contributes an extra voltage drop to the system during normal operation, which reduces the overall efficiency.
- The effect of the RHP zero of the boost converter needs to be accounted for when determining compensation for the converter, as mentioned in *Frequency Compensation*.

An evaluation module using the TPS7H5020 in a boost configuration has been designed with the parameters as shown in Table 8-2.

Table 8-2. Design Parameters for TPS7H5020EVM

DESIGN PARAMETER	VALUE
Input voltage range	5V to 12V
Output voltage	15V±10%
Maximum output current	1A
Switching frequency	1MHz
Target bandwidth	4.5kHz
Full load step (1A) transient response	≤450mV

Copyright © 2026 Texas Instruments Incorporated

Refer to the TPS7H5020EVM user's guide for a more detailed examination of the boost converter schematic and testing results.

8.2.5 Feedback Isolation Using ISOS510

A simplified schematic for an isolated forward converter utilizing the TPS7H5021 device is shown in Figure 8-6. This forward converter implementation utilizes the ISOS510 and a shunt voltage reference, such as the TL1431-SP, for providing the isolated feedback of the converter. The ISOS510 is a current-driven analog isolator with transistor output, a radiation-tolerant alternative to an optocoupler for providing isolated feedback in space-grade converter designs. The device offers a SiO_2 isolation barrier between the input and output and stable current transfer ratio (CTR) across temperature, lifetime, and radiation. For additional details, refer to the ISOS510 data sheet.

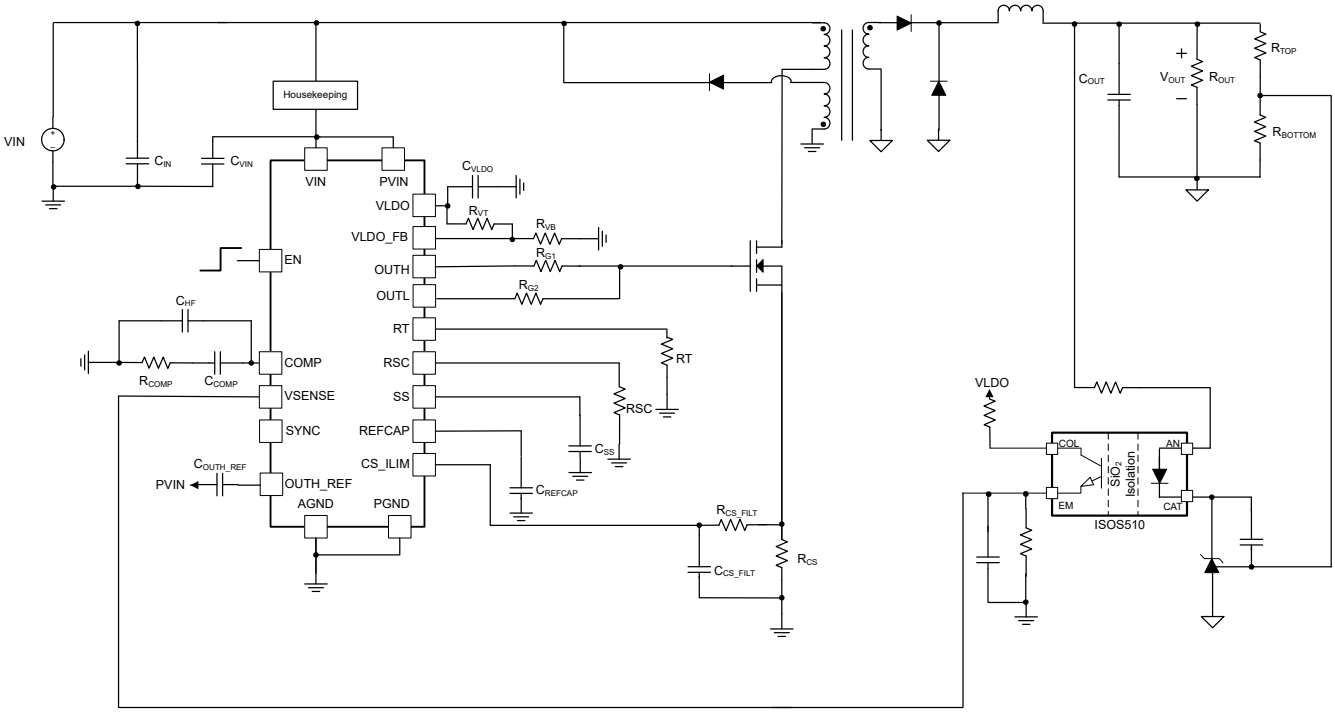

Figure 8-6. Forward Converter Using TPS7H502x Controller and ISOS510 for Feedback

A voltage divider at the output is used to provide the reference input for the shunt regulator. This input is compared to the internal shunt reference, and based on the converter output voltage the current demanded by the shunt reference varies to regulate the reference output. The shunt reference current sets the forward current for the input of the ISOS510. The output current of the ISOS510 is proportional to this input current and is used in conjunction with passive components to provide the feedback for the controller at the VSENSE pin. Since the ISOS510 has low current requirements, the output transistor can be powered using the VLDO output of the TPS7H502x controller, provided that the user adheres to the VLDO output current requirements as detailed in *Specifications*.

8.3 Power Supply Recommendations

The TPS7H502x controllers are designed to operate from an input voltage supply range between 4.5V and 14V. The TPS7H503x controller accepts an input voltage between 8V and 14V. The input voltage supply for the controller should be well regulated and properly bypassed for best electrical performance. A minimum input bypass capacitor of 0.1µF is required from VIN to GND, but additional capacitance can be used to help improve the noise and radiation performance of the controller. It is recommended to use ceramic capacitors (X7R or better) for bypassing, and these capacitors should be placed as close as possible to the controller with a low impedance path to GND. Additional bulk capacitors should be used if the input supply is more than a few inches from TPS7H502x or TPS7H503x controller.

Copyright © 2026 Texas Instruments Incorporated

The PVIN supply also is designed to operate from an input supply range between 4.5V and 14V for the TPS7H502x and 8V to 14V for the TPS7H503x. PVIN can be tied to VIN, tied to VLDO for TPS7H502x, or connected to another user generated voltage rail. A minimum bypass capacitor of 1µF is recommended here. In instances where PVIN is tied to VLDO for the TPS7H502x, the total bypass capacitance must not exceed 4.7µF.

8.4 Layout

8.4.1 Layout Guidelines

To increase the reliability of the converter design using the TPS7H502x and TPS7H503x series, the following layout guidelines are recommended to be followed.

- Route the feedback trace as far away as possible from power magnetics components (inductor and/or power transformer) and other noise inducing traces on the printed circuit board (PCB) such as the switch node. If the feedback trace is routed beneath the power magnetic component, make sure that this trace is on another layer of the PCB with at least one ground layer separating the trace from the inductor or transformer.
- Minimize the copper area of the converter switch node for the best noise performance and reduction of parasitic capacitance to reduce switching losses. Make sure that any noise sensitive signals, such as the feedback trace, are routed away from this node as this contains a high dv/dt switching signal.
- All high di/dt and dv/dt switching loops in the power stage are recommended to have the paths minimized. This helps to reduce EMI, lower stresses on the power devices, and reduce any noise coupling into the control loop.
- Keep the analog ground of the controller separate from the power ground of the power stage that contains high frequency, high di/dt currents. These two grounds can be connected at a single point in the PCB layout. The sources of power semiconductor switches, the returns for bulk input capacitors of the power stage, and the ouput capacitor return can all be connected to the PCB power ground.
- All high current traces on the PCB are recommended to be short, direct, and as wide as possible. A good rule is to make the traces a minimum of 15mils (0.381mm) per ampere.
- Place all filtering and bypass capacitors for VIN, PVIN, REFCAP, and VLDO as close as possible to the controller. Surface mount ceramic capacitors with lower ESR and ESL are recommended as these reduce the potential for noise coupling compared to through-hole capacitors. Care must be taken to minimize the loop area formed by the bypass capacitor connection, the respective pin, and GND. Each bypass capacitor is recommended to have a good, low impedance connection to GND.
- External compensation components are recommended to be placed near the COMP pin of the controller. Surface mount components are recommended here as well.
- Attempt to keep the resistor divider used to generate the voltage at VSENSE close to the device in order to reduce noise coupling. Minimize stray capacitance to the VSENSE pin.
- OUTH and OUTL are used to drive the gates of power semiconductor devices. The PCB traces connected to these pins carry high dv/dt signals. Reduce noise coupling by routing these PCB traces away from any traces connected to VSENSE, COMP, RT, and CS_ILIM.
- Use short, low-inductance traces to connect OUTH and OUTL, the gate resistors, and the gate of the power semiconductor device being driven. The FET is recommended to be placed as close to the controller as is feasible.
- To prevent excessive ringing on the input power bus, good decoupling practices are required by placing low-ESR capacitors adjacent to the MOSFET or GaN FET.
- In addition to utilizing the leading edge blank time of the controller, RC filtering can be required for the sensed current signal input to CS_ILIM. Keep the resistor and capacitor in close vicinity to CS_ILIM to filter any ringing and/or spikes that can be present on the sensed current signal.
- Connect the thermal pad to the ground plane of the PCB using multiple vias. It is recommended to avoid putting solder paste directly on top of the vias unless these vias are tented or filled.

Copyright © 2026 Texas Instruments Incorporated

8.4.2 Layout Example

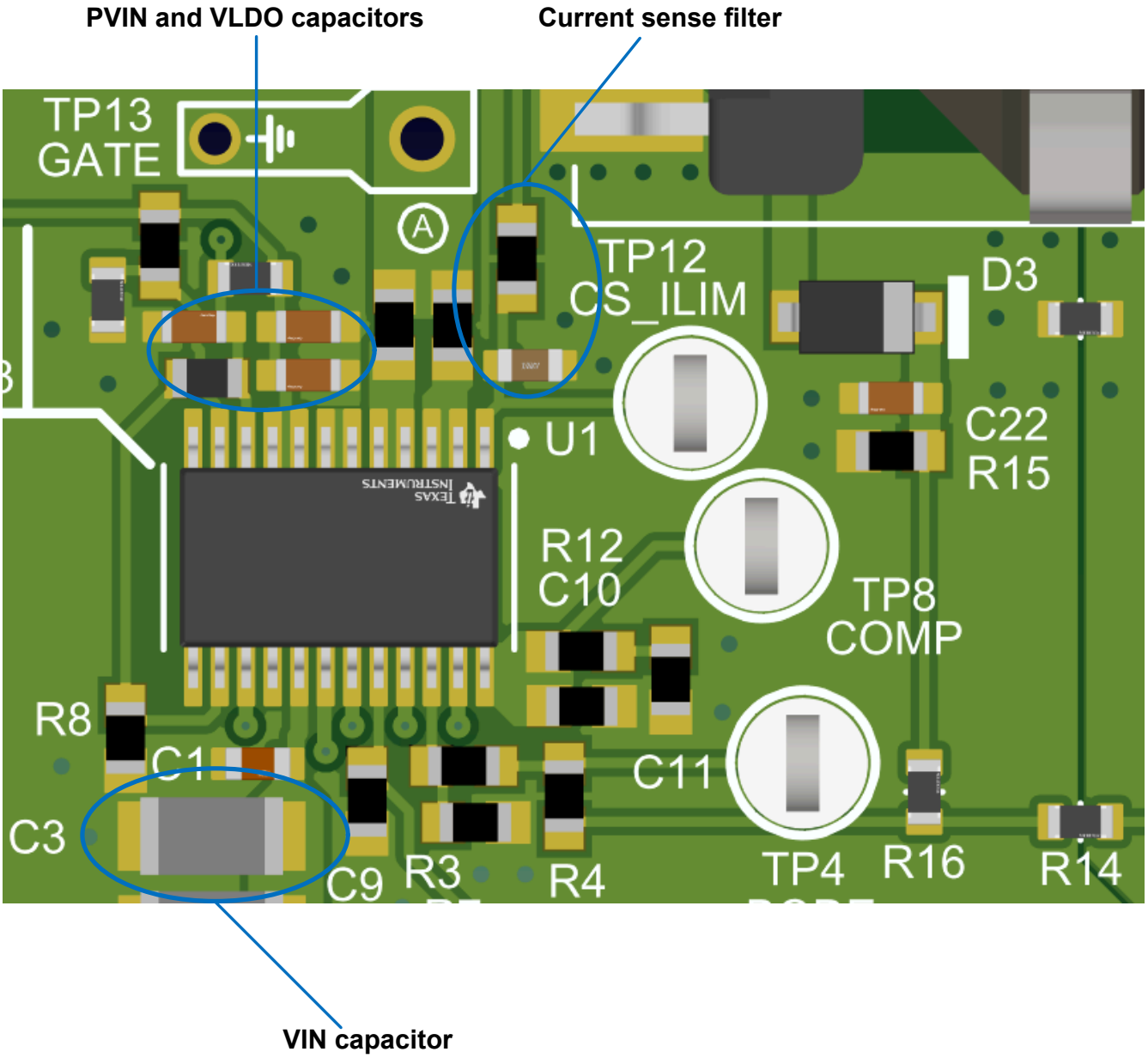

Figure 8-7. 3D Layout View From TPS7H5020FLYEVM

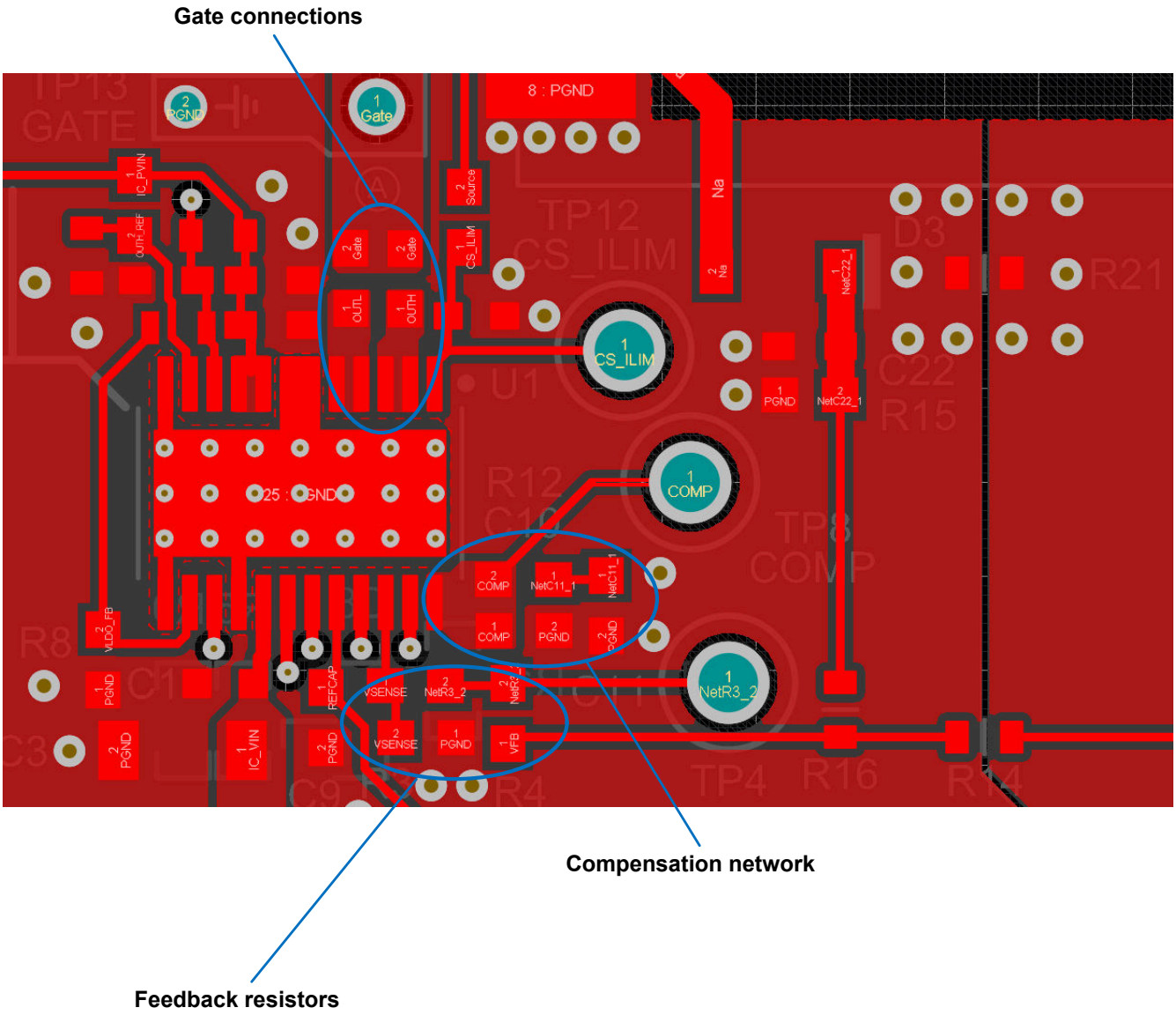

Figure 8-8. Top Layer Layout View From TPS7H5020FLYEVM

Copyright © 2026 Texas Instruments Incorporated

9 Device and Documentation Support

9.1 Documentation Support

9.1.1 Related Documentation

For related documentation see the following:

- Texas Instruments, *TPS7H5020EVM Evaluation Module* user's guide
- Texas Instruments, *TPS7H5020FLYEVM Evaluation Module* user's guide
- Texas Instruments, *TPS7H5020-SEP Total Ionizing Dose* radiation report
- Texas Instruments, *TPS7H5020-SP Total Ionizing Dose* radiation report
- Texas Instruments, *TPS7H502x-SP Single Event Effects* radiation report
- Texas Instruments, *TPS7H5020 Neutron Displacement Damage* radiation report
- Texas Instruments, *TPS7H5030EVM Evaluation Module* user's guide
- Texas Instruments, *TPS7H5030-SEP Single Event Effects* radiation report
- Texas Instruments, *TPS7H5030-SEP Total Ionizing Dose* radiation report

9.2 Receiving Notification of Documentation Updates

To receive notification of documentation updates, navigate to the device product folder on ti.com. Click on *Notifications* to register and receive a weekly digest of any product information that has changed. For change details, review the revision history included in any revised document.

9.3 Support Resources

TI E2E™ support forums are an engineer's go-to source for fast, verified answers and design help — straight from the experts. Search existing answers or ask your own question to get the quick design help you need.

Linked content is provided "AS IS" by the respective contributors. They do not constitute TI specifications and do not necessarily reflect TI's views; see TI's Terms of Use.

9.4 Trademarks

TI E2E™ is a trademark of Texas Instruments.
All trademarks are the property of their respective owners.

9.5 Electrostatic Discharge Caution

This integrated circuit can be damaged by ESD. Texas Instruments recommends that all integrated circuits be handled with appropriate precautions. Failure to observe proper handling and installation procedures can cause damage.

ESD damage can range from subtle performance degradation to complete device failure. Precision integrated circuits may be more susceptible to damage because very small parametric changes could cause the device not to meet its published specifications.

9.6 Glossary

TI Glossary	This glossary lists and explains terms, acronyms, and definitions.

10 Revision History

NOTE: Page numbers for previous revisions may differ from page numbers in the current version.

Changes from Revision D (March 2026) to Revision E (April 2026)	Page
• Changed TPS7H5031-SEP and TPS7H5031-SP device statuses from *Product Preview* to *Production Data*..	1
• Updated *Driver PVIN Configuration* section with additional guidance	47
• Updated *Current Sense Resistor* section with additional guidance	51

Changes from Revision C (February 2026) to Revision D (March 2026)	Page
• Deleted product preview label from the TPS7H5030-SP production data device	1

- Deleted product preview label from the TPS7H5021-SP production data device..... 4

Changes from Revision B (February 2026) to Revision C (February 2026) **Page**

- Changed TPS7H5030-SEP and TPS7H5030-SP device statuses from *Product Preview* to *Production Data*.. 1
- Correct SMD number for the TPS7H5030-SP.....4
- Updated *Related Documentation* with references to TPS7H503x reports..... 59

Changes from Revision A (September 2025) to Revision B (February 2026) **Page**

- Changed TPS7H5021-SEP and TPS7H5021-SP device statuses from *Product Preview* to *Production Data*.. 1
- Updated datasheet to include TPS7H5030-SEP, TPS7H5030-SP, TPS7H5031-SEP, and TPS7H5031-SP with *Product Preview* status.....1
- Updated datasheet title to include TPS7H503x devices.....1
- Updated *Features*, *Applications*, *Description*, *Pin Configuration and Functions*, *Specifications*, *Detailed Description*, and *Application and Implementation* sections to include details of TPS7H503x devices and distinguish from TPS7H502x devices.....1
- Updated *Device Comparison Table* to include electrical feature comparison between TPS7H502x and TPS7H503x devices..... 4

Changes from Revision * (March 2025) to Revision A (September 2025) **Page**

- Changed TPS7H5020-SP device status from *Product Preview* to *Production Data* and TPS7H5020-SEP device status from *Advance Information* to *Production Data*.....1

Copyright © 2026 Texas Instruments Incorporated

11 Mechanical, Packaging, and Orderable Information

The following pages include mechanical, packaging, and orderable information. This information is the most current data available for the designated devices. This data is subject to change without notice and revision of this document. For browser-based versions of this data sheet, refer to the left-hand navigation.

PACKAGING INFORMATION

Orderable part number	Status (1)	Material type (2)	Package | Pins	Package qty | Carrier	RoHS (3)	Lead finish/ Ball material (4)	MSL rating/ Peak reflow (5)	Op temp (°C)	Part marking (6)
5962R2420101PYE	Active	Production	HTSSOP (PWP) | 24	250 | SMALL T&R	Yes	NIPDAU	Level-3-260C-168 HR	-55 to 125	R2420101PY
5962R2420102PYE	Active	Production	HTSSOP (PWP) | 24	250 | SMALL T&R	Yes	NIPDAU	Level-3-260C-168 HR	-55 to 125	R2420102PY
5962R2420103PYE	Active	Production	HTSSOP (PWP) | 24	250 | SMALL T&R	Yes	NIPDAU	Level-3-260C-168 HR	-55 to 125	R2420103PY
5962R2420104PYE	Active	Production	HTSSOP (PWP) | 24	250 | SMALL T&R	Yes	NIPDAU	Level-3-260C-168 HR	-55 to 125	R2420104PY
TPS7H5020MPWPTSEP	Active	Production	HTSSOP (PWP) | 24	250 | SMALL T&R	Yes	NIPDAU	Level-3-260C-168 HR	-55 to 125	7H5020PWP
TPS7H5021MPWPTSEP	Active	Production	HTSSOP (PWP) | 24	250 | SMALL T&R	Yes	NIPDAU	Level-3-260C-168 HR	-55 to 125	7H5021PWP
TPS7H5030MPWPTSEP	Active	Production	HTSSOP (PWP) | 24	250 | SMALL T&R	Yes	NIPDAU	Level-3-260C-168 HR	-55 to 125	7H5030PWP
TPS7H5031MPWPTSEP	Active	Production	HTSSOP (PWP) | 24	250 | SMALL T&R	Yes	NIPDAU	Level-3-260C-168 HR	-55 to 125	7H5031PWP
V62/25651-01XE	Active	Production	HTSSOP (PWP) | 24	250 | SMALL T&R	Yes	NIPDAU	Level-3-260C-168 HR	-55 to 125	7H5020PWP
V62/25651-02XE	Active	Production	HTSSOP (PWP) | 24	250 | SMALL T&R	Yes	NIPDAU	Level-3-260C-168 HR	-55 to 125	7H5021PWP
V62/25651-04XE	Active	Production	HTSSOP (PWP) | 24	250 | SMALL T&R	Yes	NIPDAU	Level-3-260C-168 HR	-55 to 125	7H5031PWP

(1) **Status:** For more details on status, see our product life cycle.

(2) **Material type:** When designated, preproduction parts are prototypes/experimental devices, and are not yet approved or released for full production. Testing and final process, including without limitation quality assurance, reliability performance testing, and/or process qualification, may not yet be complete, and this item is subject to further changes or possible discontinuation. If available for ordering, purchases will be subject to an additional waiver at checkout, and are intended for early internal evaluation purposes only. These items are sold without warranties of any kind.

(3) **RoHS values:** Yes, No, RoHS Exempt. See the TI RoHS Statement for additional information and value definition.

(4) **Lead finish/Ball material:** Parts may have multiple material finish options. Finish options are separated by a vertical ruled line. Lead finish/Ball material values may wrap to two lines if the finish value exceeds the maximum column width.

(5) **MSL rating/Peak reflow:** The moisture sensitivity level ratings and peak solder (reflow) temperatures. In the event that a part has multiple moisture sensitivity ratings, only the lowest level per JEDEC standards is shown. Refer to the shipping label for the actual reflow temperature that will be used to mount the part to the printed circuit board.

(6) **Part marking:** There may be an additional marking, which relates to the logo, the lot trace code information, or the environmental category of the part.

Multiple part markings will be inside parentheses. Only one part marking contained in parentheses and separated by a "~" will appear on a part. If a line is indented then it is a continuation of the previous line and the two combined represent the entire part marking for that device.

Important Information and Disclaimer: The information provided on this page represents TI's knowledge and belief as of the date that it is provided. TI bases its knowledge and belief on information provided by third parties, and makes no representation or warranty as to the accuracy of such information. Efforts are underway to better integrate information from third parties. TI has taken and continues to take reasonable steps to provide representative and accurate information but may not have conducted destructive testing or chemical analysis on incoming materials and chemicals. TI and TI suppliers consider certain information to be proprietary, and thus CAS numbers and other limited information may not be available for release.

In no event shall TI's liability arising out of such information exceed the total purchase price of the TI part(s) at issue in this document sold by TI to Customer on an annual basis.

OTHER QUALIFIED VERSIONS OF TPS7H5020-SEP, TPS7H5020-SP, TPS7H5021-SEP, TPS7H5021-SP, TPS7H5030-SEP, TPS7H5030-SP, TPS7H5031-SEP, TPS7H5031-SP :

- Catalog : TPS7H5020-SEP, TPS7H5021-SEP, TPS7H5030-SEP, TPS7H5031-SEP
- Space : TPS7H5020-SP, TPS7H5021-SP, TPS7H5030-SP, TPS7H5031-SP

NOTE: Qualified Version Definitions:

- Catalog - TI's standard catalog product
- Space - Radiation tolerant, ceramic packaging and qualified for use in Space-based application

TAPE AND REEL INFORMATION

REEL DIMENSIONS

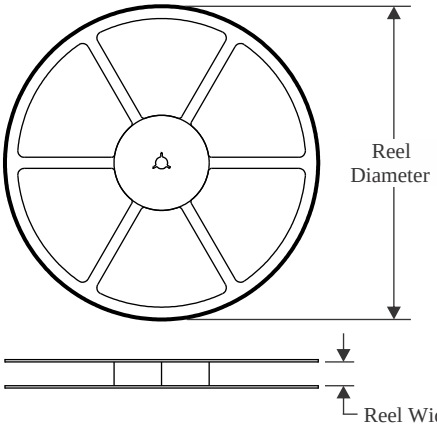

TAPE DIMENSIONS

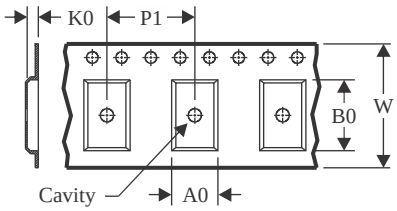

A0	Dimension designed to accommodate the component width
B0	Dimension designed to accommodate the component length
K0	Dimension designed to accommodate the component thickness
W	Overall width of the carrier tape
P1	Pitch between successive cavity centers

QUADRANT ASSIGNMENTS FOR PIN 1 ORIENTATION IN TAPE

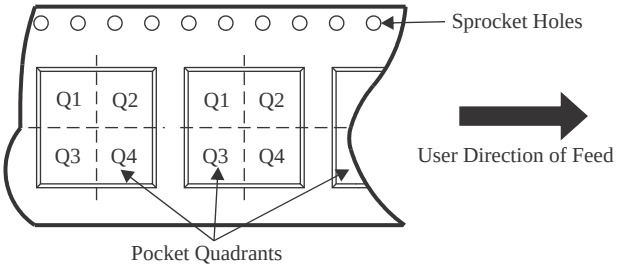

*All dimensions are nominal

Device	Package Type	Package Drawing	Pins	SPQ	Reel Diameter (mm)	Reel Width W1 (mm)	A0 (mm)	B0 (mm)	K0 (mm)	P1 (mm)	W (mm)	Pin1 Quadrant
5962R2420101PYE	HTSSOP	PWP	24	250	178.0	16.4	6.95	8.3	1.6	8.0	16.0	Q1
5962R2420102PYE	HTSSOP	PWP	24	250	178.0	16.4	6.95	8.3	1.6	8.0	16.0	Q1
5962R2420103PYE	HTSSOP	PWP	24	250	178.0	16.4	6.95	8.3	1.6	8.0	16.0	Q1
5962R2420104PYE	HTSSOP	PWP	24	250	178.0	16.4	6.95	8.3	1.6	8.0	16.0	Q1
TPS7H5020MPWPTSEP	HTSSOP	PWP	24	250	178.0	16.4	6.95	8.3	1.6	8.0	16.0	Q1
TPS7H5021MPWPTSEP	HTSSOP	PWP	24	250	178.0	16.4	6.95	8.3	1.6	8.0	16.0	Q1
TPS7H5030MPWPTSEP	HTSSOP	PWP	24	250	178.0	16.4	6.95	8.3	1.6	8.0	16.0	Q1
TPS7H5031MPWPTSEP	HTSSOP	PWP	24	250	178.0	16.4	6.95	8.3	1.6	8.0	16.0	Q1

TAPE AND REEL BOX DIMENSIONS

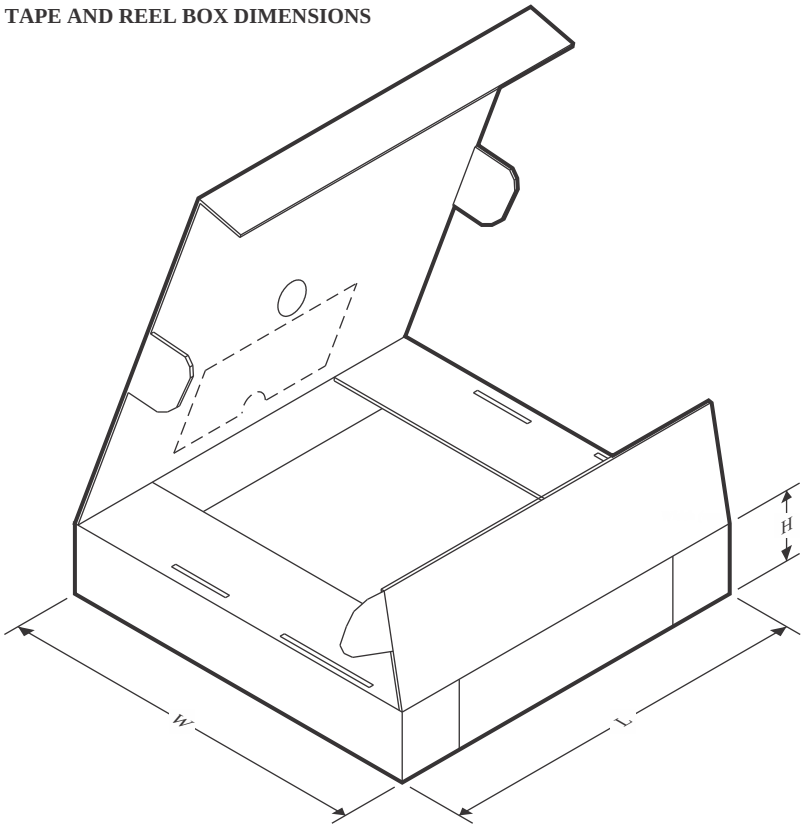

*All dimensions are nominal

Device	Package Type	Package Drawing	Pins	SPQ	Length (mm)	Width (mm)	Height (mm)
5962R2420101PYE	HTSSOP	PWP	24	250	208.0	191.0	35.0
5962R2420102PYE	HTSSOP	PWP	24	250	208.0	191.0	35.0
5962R2420103PYE	HTSSOP	PWP	24	250	208.0	191.0	35.0
5962R2420104PYE	HTSSOP	PWP	24	250	208.0	191.0	35.0
TPS7H5020MPWPTSEP	HTSSOP	PWP	24	250	208.0	191.0	35.0
TPS7H5021MPWPTSEP	HTSSOP	PWP	24	250	208.0	191.0	35.0
TPS7H5030MPWPTSEP	HTSSOP	PWP	24	250	208.0	191.0	35.0
TPS7H5031MPWPTSEP	HTSSOP	PWP	24	250	208.0	191.0	35.0

GENERIC PACKAGE VIEW

PWP 24

PowerPAD™ TSSOP - 1.2 mm max height

4.4 x 7.6, 0.65 mm pitch

PLASTIC SMALL OUTLINE

This image is a representation of the package family, actual package may vary.
Refer to the product data sheet for package details.

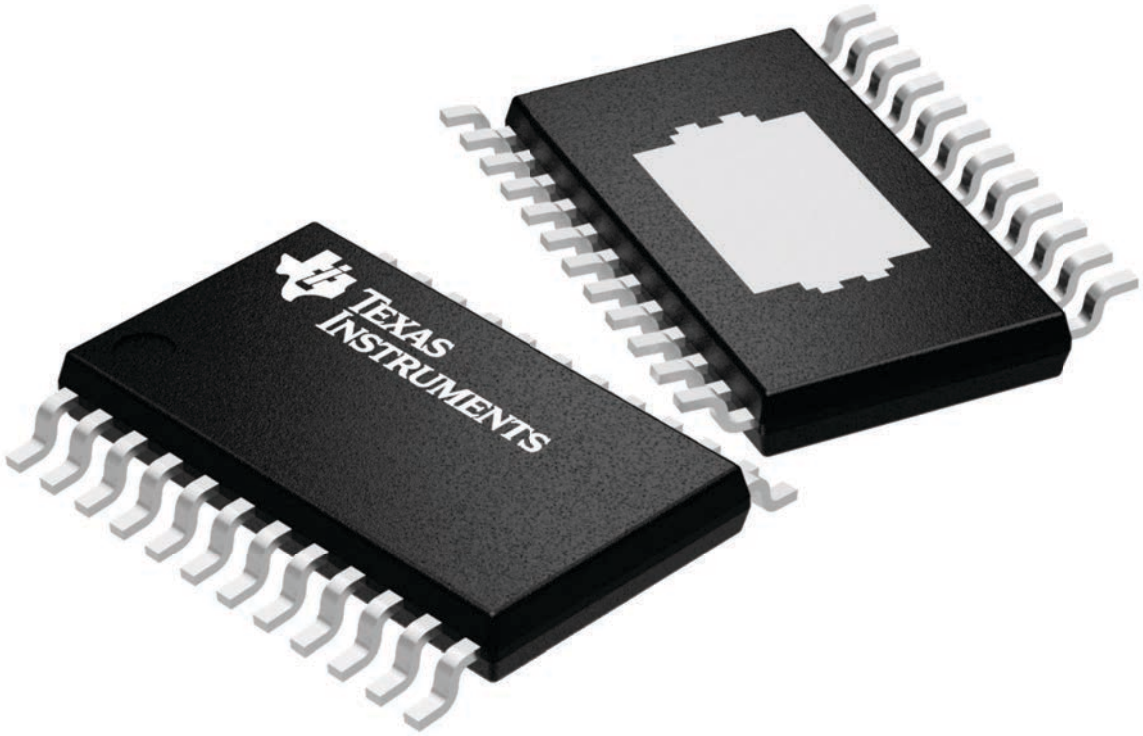

4224742/B

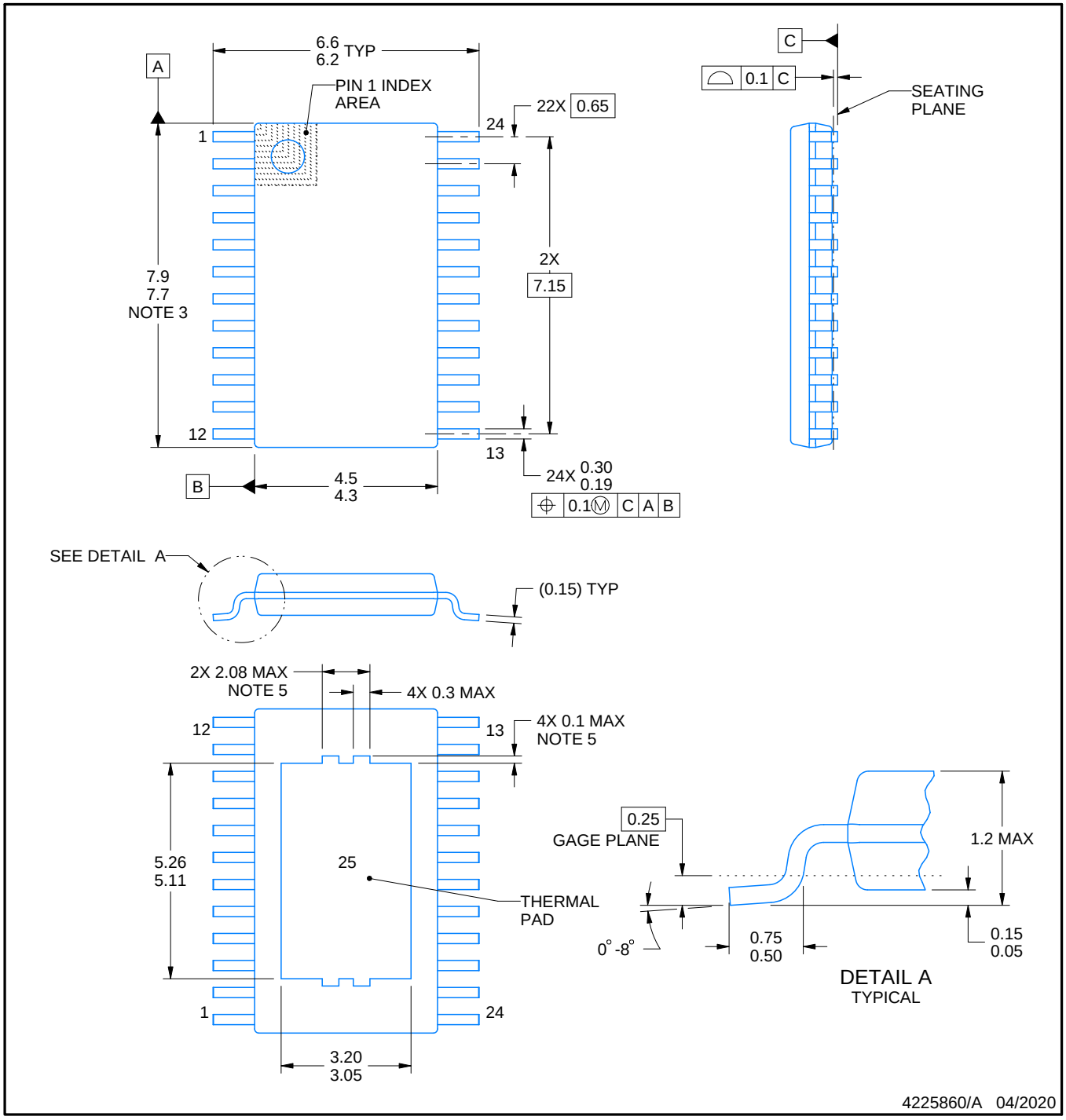

PowerPAD is a trademark of Texas Instruments.

NOTES:

1. All linear dimensions are in millimeters. Any dimensions in parenthesis are for reference only. Dimensioning and tolerancing per ASME Y14.5M.
2. This drawing is subject to change without notice.
3. This dimension does not include mold flash, protrusions, or gate burrs. Mold flash, protrusions, or gate burrs shall not exceed 0.15 mm per side.
4. Reference JEDEC registration MO-153.
5. Features may differ or may not be present.

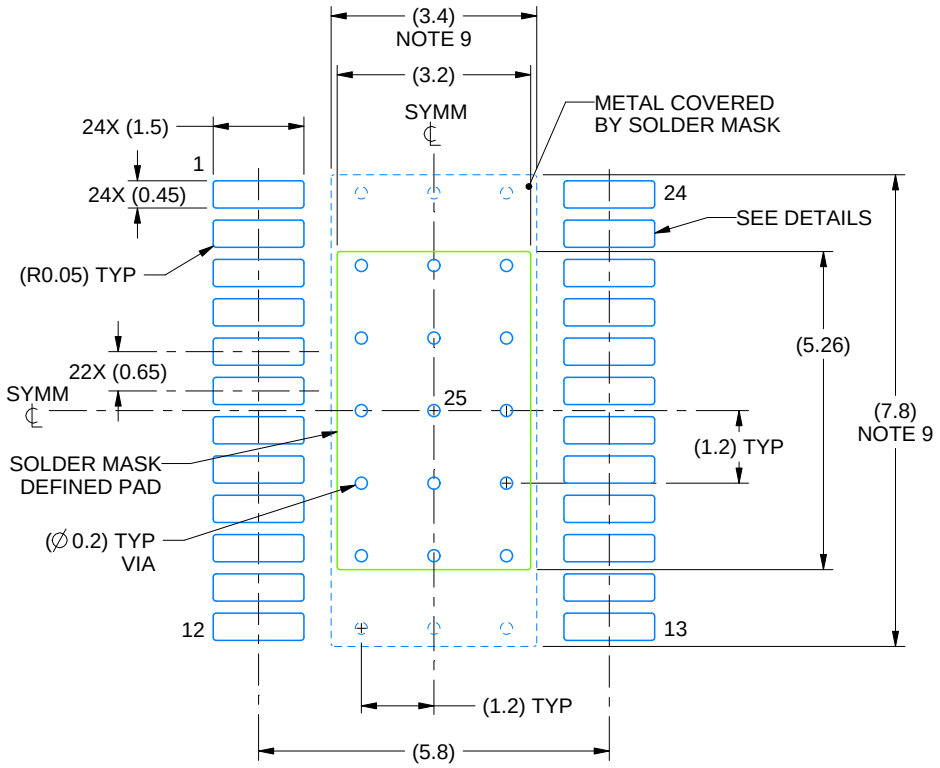

LAND PATTERN EXAMPLE
EXPOSED METAL SHOWN
SCALE: 8X

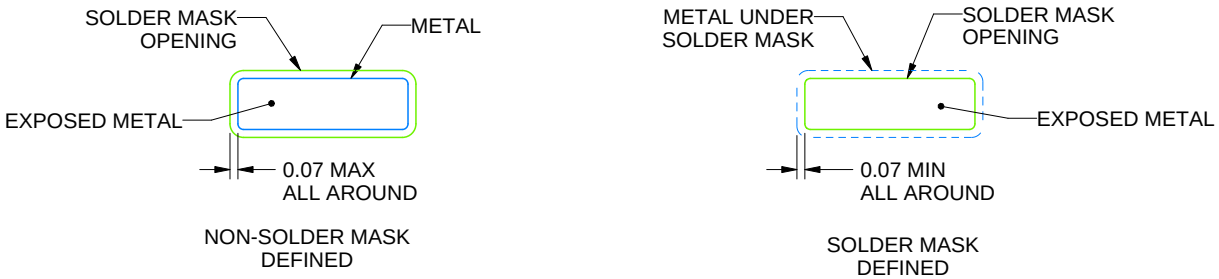

SOLDER MASK DETAILS

4225860/A 04/2020

NOTES: (continued)

6. Publication IPC-7351 may have alternate designs.
7. Solder mask tolerances between and around signal pads can vary based on board fabrication site.
8. This package is designed to be soldered to a thermal pad on the board. For more information, see Texas Instruments literature numbers SLMA002 (www.ti.com/lit/slma002) and SLMA004 (www.ti.com/lit/slma004).
9. Size of metal pad may vary due to creepage requirement.
10. Vias are optional depending on application, refer to device data sheet. It is recommended that vias under paste be filled, plugged or tented.

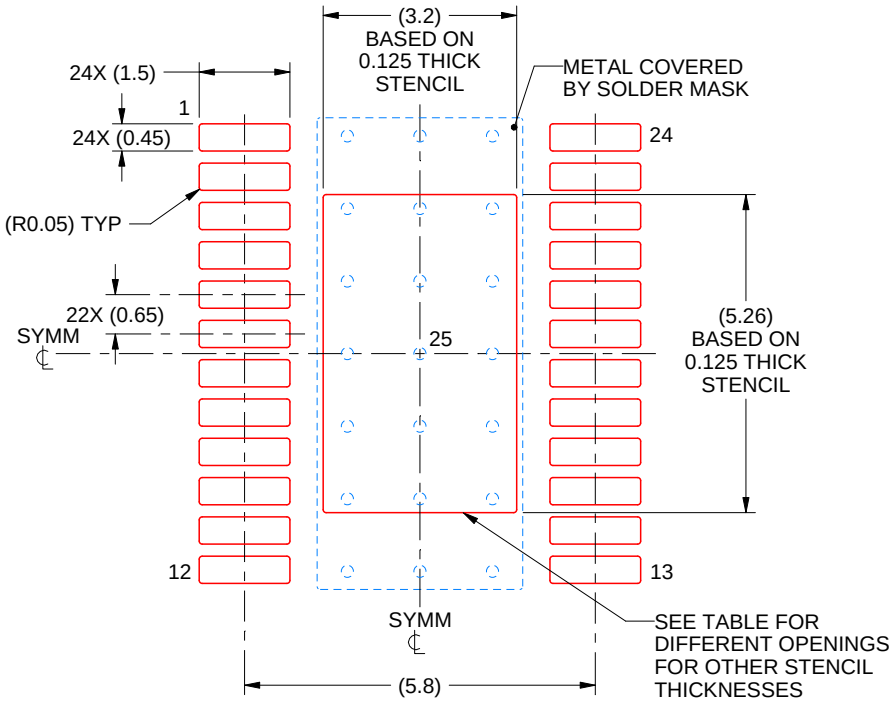

SOLDER PASTE EXAMPLE
BASED ON 0.125 mm THICK STENCIL
SCALE: 8X

STENCIL THICKNESS	SOLDER STENCIL OPENING
0.1	3.58 X 5.88
0.125	3.20 X 5.26 (SHOWN)
0.15	2.92 X 4.80
0.175	2.70 X 4.45

4225860/A 04/2020

NOTES: (continued)

11. Laser cutting apertures with trapezoidal walls and rounded corners may offer better paste release. IPC-7525 may have alternate design recommendations.
12. Board assembly site may have different recommendations for stencil design.

IMPORTANT NOTICE AND DISCLAIMER

TI PROVIDES TECHNICAL AND RELIABILITY DATA (INCLUDING DATASHEETS), DESIGN RESOURCES (INCLUDING REFERENCE DESIGNS), APPLICATION OR OTHER DESIGN ADVICE, WEB TOOLS, SAFETY INFORMATION, AND OTHER RESOURCES “AS IS” AND WITH ALL FAULTS, AND DISCLAIMS ALL WARRANTIES, EXPRESS AND IMPLIED, INCLUDING WITHOUT LIMITATION ANY IMPLIED WARRANTIES OF MERCHANTABILITY, FITNESS FOR A PARTICULAR PURPOSE OR NON-INFRINGEMENT OF THIRD PARTY INTELLECTUAL PROPERTY RIGHTS.

These resources are intended for skilled developers designing with TI products. You are solely responsible for (1) selecting the appropriate TI products for your application, (2) designing, validating and testing your application, and (3) ensuring your application meets applicable standards, and any other safety, security, regulatory or other requirements.

These resources are subject to change without notice. TI grants you permission to use these resources only for development of an application that uses the TI products described in the resource. Other reproduction and display of these resources is prohibited. No license is granted to any other TI intellectual property right or to any third party intellectual property right. TI disclaims responsibility for, and you fully indemnify TI and its representatives against any claims, damages, costs, losses, and liabilities arising out of your use of these resources.

TI’s products are provided subject to TI’s Terms of Sale, TI’s General Quality Guidelines, or other applicable terms available either on ti.com or provided in conjunction with such TI products. TI’s provision of these resources does not expand or otherwise alter TI’s applicable warranties or warranty disclaimers for TI products. Unless TI explicitly designates a product as custom or customer-specified, TI products are standard, catalog, general purpose devices.

TI objects to and rejects any additional or different terms you may propose.

Copyright © 2026, Texas Instruments Incorporated

Last updated 10/2025