TPS92201 1.5A High Efficiency Synchronous Buck LED Driver

1 Features

- 2.5V to 5.5V input voltage range
- 1.5A constant output current
- Up to 95% efficiency
- 0.1μA shutdown current
- 220mΩ (HS) / 170mΩ (LS) MOSFETs
- Up to 100% switching duty cycle
- 1.5MHz switching frequency
- Force PWM mode for low output ripple (TPS92201)
- Power save mode for high efficiency in light load (TPS92201A)
- 0.6V to VIN output voltage range
- 100mV feedback regulation voltage
- 1% to 100% analog dimming with high accuracy
- 20kHz to 200kHz PWM input frequency
- Internal soft startup
- Full protection with over current, LED open/short, FB resistor open/short
- Thermal shutdown protection
- WSON and SOT563 package options

2 Applications

- Test and measurement
- Power delivery
- Building automation
  - Smart home camera
  - Video doorbell
  - IP camera
  - Smart doorlock
  - Flashlight

3 Description

The TPS92201 is a high-efficiency 1.5A synchronous buck-type LED driver with 2.5V to 5.5V input range. By integrating the high-side and low-side MOSFET, high efficiency and compact solution size can be achieved. The ultra-low 1μA shutdown current helps saving power in battery-powered applications.

Adaptive off-time with peak current control scheme is adapted in the TPS92201. To get the smallest output ripple, the device operates at typically 1.5MHz pulse width modulation (PWM) mode in full current range.

Adaptive off-time with peak current control scheme is adapted in the TPS92201A. At medium to heavy load, the device operates in pulse width modulation (PWM) mode with 1.5MHz switching frequency. At light load, the device automatically enters pulse frequency modulation (PFM) to maintain high efficiency over the entire load current range.

The integrated switches have the capability to deliever up to 1.5A constant current. Analog dimming is achieved by adjusting the duty cycle of the PWM input with 1% to 100% range. 20kHz to 200kHz input PWM frequency can be supported to avoid audible noise.

For safety and protection, the TPS92201 device implement full protections, including LED open, LED short, FB resistor open, FB resistor short and thermal shutdown.

Device Information (1)

ORDERABLE PART NUMBER	PACKAGE	BODY SIZE (NOM)
TPS92201DRV	WSON (6)	2mm × 2mm (2)
TPS92201ADRV	WSON (6)	
TPS92201DRL	SOT563 (6)	1.6mm × 1.6mm
TPS92201ADRL	SOT563 (6)	

(1) For more information, see Section 11.
(2) The package size (length x width) is a nominal value and includes pins, where applicable.

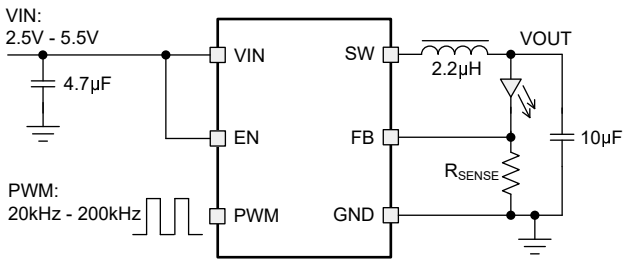

Simplified Schematic

An IMPORTANT NOTICE at the end of this data sheet addresses availability, warranty, changes, use in safety-critical applications, intellectual property matters and other important disclaimers. PRODUCTION DATA.

Table of Contents

1 Features....1
2 Applications....1
3 Description....1
4 Device Comparison Table....2
5 Pin Configuration and Functions....3
6 Specifications....4
6.1 Absolute Maximum Ratings....4
6.2 ESD Ratings....4
6.3 Recommended Operating Conditions....4
6.4 Thermal Information....4
6.5 Electrical Characteristics....5
6.6 Typical Characteristics....6
7 Detailed Description....7
7.1 Overview....7
7.2 Functional Block Diagram....7
7.3 Feature Description....7
7.4 Device Functional Modes....9
8 Application and Implementation....10
8.1 Application Information....10
8.2 Typical Application....10
8.3 Power Supply Recommendations....15
8.4 Layout....15
9 Device and Documentation Support....16
9.1 Device Support....16
9.2 Documentation Support....16
9.3 Receiving Notification of Documentation Updates....16
9.4 Support Resources....16
9.5 Trademarks....16
9.6 Electrostatic Discharge Caution....16
9.7 Glossary....16
10 Revision History....17
11 Mechanical, Packaging, and Orderable Information....18

4 Device Comparison Table

PART NUMBER	MATERIAL	POWER SAVE MODE	PACKAGE
TPS92200	TPS92201DRVR	No	WSON-6
	TPS92201MDRVR(1)		
	TPS92201DRLR		SOT563-6
	TPS92201MDRLR(1)		
TPS92201A	TPS92201ADRVR	Yes	WSON-6
	TPS92201AMDRVR(1)		
	TPS92201ADRLR		SOT563-6
	TPS92201AMDRLR(1)		

(1) Extended Temperature devices, supporting –55°C to approximately 125°C operating ambient temperature.

Copyright © 2024 Texas Instruments Incorporated

5 Pin Configuration and Functions

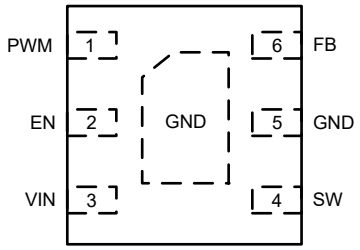

Figure 5-1. DRV Package 6-Pin WSON Top View

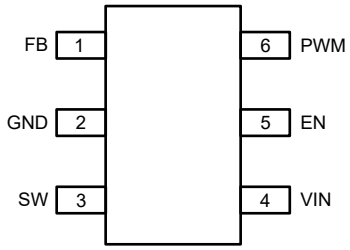

Figure 5-2. DRL Package 6-Pin SOT563 Top View

PIN NUMBER			I/O/PWR	DESCRIPTION
NAME	DRV	DRL		
PWM	1	6	I	PWM input. LED output current is adjusted according to the PWM input duty cycle.
EN	2	5	I	Device enable input. Logic high enables the device, logic low disables the device and turns the device into shutdown. Do not leave floating.
VIN	3	4	PWR	Power supply input.
SW	4	3	PWR	Switch pin. Connecting the internal FET switches and inductor terminal.
GND	5	2	PWR	Power ground.
FB	6	1	I	Feedback pin for the internal control loop. Connect this pin to an external resistor to set output current.

Copyright © 2024 Texas Instruments Incorporated

6 Specifications

6.1 Absolute Maximum Ratings

over operating ambient temperature range (unless otherwise noted)(1)

		MIN	MAX	UNIT
Voltage	VIN, EN, PWM	–0.3	6	V
	SW (DC)	–0.3	VIN + 0.3	V
	SW (AC, 10ns transient)	–3	9	V
	FB	–0.3	5.5	V
Operating junction temperature, T_J		–40	150	°C
Storage temperature, T_{stg}		–65	150	°C

(1) Stresses beyond those listed under *Absolute Maximum Ratings* may cause permanent damage to the device. Theseare stress ratings only, which do not imply functional operation of the device at these or anyother conditions beyond those indicated under *Recommended OperatingConditions*. Exposure to absolute-maximum-rated conditions for extended periods mayaffect device reliability.

6.2 ESD Ratings

			VALUE	UNIT
$V_{(ESD)}$	Electrostatic discharge	Human-body model (HBM), per ANSI/ESDA/JEDEC JS-001(1)	±2000	V
		Charged-device model (CDM), per ANSI/ESDA/JEDEC JS-002(2)	±500	

(1) JEDEC document JEP155 states that 500-V HBM allows safemanufacturing with a standard ESD control process.
(2) JEDEC document JEP157 states that 250-V CDM allows safemanufacturing with a standard ESD control process.

6.3 Recommended Operating Conditions

over operating ambient temperature range (unless otherwise noted)

		MIN	MAX	UNIT
Input stage	V_{IN}	2.5	5.5	V
	V_{EN}	–0.1	6	V
	V_{PWM}	–0.1	6	V
Output stage	V_{OUT}		V_{IN}	V
	I_{OUT}		1.5	A
Peripheral component	Effective inductance	2.2	4.7	µH
	Effective capacitance			µF
Temperature	Operating Ambient temperature, T_A	-40	85	°C
	Operating Junction temperature, T_J	–40	125	°C

6.4 Thermal Information

THERMAL METRIC(1)		TPS92201, TPS92201A		UNIT
		DRL (SOT563)	DRV (WSON-6)	
		6 PINS	6 PINS	
$R_{\theta JA}$	Junction-to-ambient thermal resistance	152	82.6	°C/W
$R_{\theta JC(top)}$	Junction-to-case (top) thermal resistance	73.1	106.5	°C/W
$R_{\theta JB}$	Junction-to-board thermal resistance	41.3	45.8	°C/W
ψ_{JT}	Junction-to-top characterization parameter	2.1	7.7	°C/W
ψ_{JB}	Junction-to-board characterization parameter	40.7	45.7	°C/W

(1) For more information about traditional and new thermalmetrics, see the *Semiconductor and IC Package Thermal Metrics*application report, SPRA953.

Copyright © 2024 Texas Instruments Incorporated

6.5 Electrical Characteristics

V_{IN} = 2.5V to 5.5V, T_A = –40°C to +85°C(T_A = –55°C to +125°C for TPS92201MDRVR and TPS92201AMDRVR and for the TPS92201MDRLR and TPS92201AMDRLR); Typical values are at T_A = 25°C (unless otherwise specified)

PARAMETER		TEST CONDITIONS	MIN	TYP	MAX	UNIT
INPUT SUPPLY						
V_{IN}	Input voltage range		2.5		5.5	V
V_{IN_UVLO}	V_{IN} undervoltage lockout	Fallng V_{IN}	2.1	2.2		V
		Rising V_{IN}		2.3	2.4	V
	Hysteresis			0.1		V
I_{SD}	Shutdown current into V_{IN}	V_{IN} = 3.6V, V_{EN} = 0		0.1	0.5	µA
I_{SD_ET}	Shutdown current into V_{IN}	V_{IN} = 3.6V, V_{EN} = 0 (TPS92201MDRVR,TPS92201AMDRVR, TPS92201MDRLR and TPS92201AMDRLR)		0.1	1.75	µA
I_Q	Quiescent current into V_{IN}	V_{IN} = 3.6V, V_{EN} = 2V, V_{FB}=0V, Not switching (TPS92201)	450	520	600	µA
		V_{IN} = 3.6V, V_{EN} = 2V, V_{FB} = 0V, Not switching (TPS92201A)	520	630	720	µA
LOGIC INTERFACE						
V_{EN_H}	High-level threshold voltage of EN				1.2	V
V_{EN_L}	Low-level threshold voltage of EN		0.4			V
V_{IH_PWM}	High-level threshold voltage of PWM				1	V
V_{IL_PWM}	Low-level threshold voltage of PWM		0.7			V
t_{EN_ON}	EN minimum on time to enable device					µS
t_{EN_OFF}	EN minimum off time to disable device					µS
t_{PWM_ON}	PWM minimum on time when dimming the output current				5	µS
f_{PWM}	PWM input frequency		20		200	kHz
D_{PWM}	PWM input duty cycle		1		100	%
I_{LKG}	Leakage current of EN pin	V_{IN} = 5.5V, V_{EN} = 5.5V, V_{PWM} = 5.5V,			1	µA
I_{LKG}	Leakage current of PWM pin	V_{IN} = 5.5V, V_{EN} = 5.5V, V_{PWM} = 5.5V,			0.5	µA
OUTPUT STAGE						
V_{FB_REF}	FB pin regulation voltage at maximum duty cycle	PWM = 100%, I_{OUT} = 500mA	92	100	104	mV
	FB pin regulation voltage at 50% duty cycle	PWM = 50%, I_{OUT} = 0mA(TM), F_{PWM}=20KHz	-8%	50	+8%	mV
	FB pin regulation voltage at 50% duty cycle	PWM = 50%, I_{OUT} = 0mA(TM), F_{PWM}=200KHz	-10%	50	+10%	mV
	FB pin regulation voltage at 5% duty cycle	PWM = 5%, I_{OUT} = 500mA		5		mV
	FB pin regulation voltage at 1% duty cycle	PWM = 1%, I_{OUT} = 500mA		1		mV
R_{HS}	High-side FET on resistance			220	330	mΩ
R_{LS}	Low-side FET on resistance			170	300	mΩ
f_{SW}	Switching frequency			1.5		MHz
D_{max}	Maximum switching duty cycle			100		%
I_{LIM_HS}	High-side current limit		1.9	2.16		A

Copyright © 2024 Texas Instruments Incorporated

6.6 Typical Characteristics

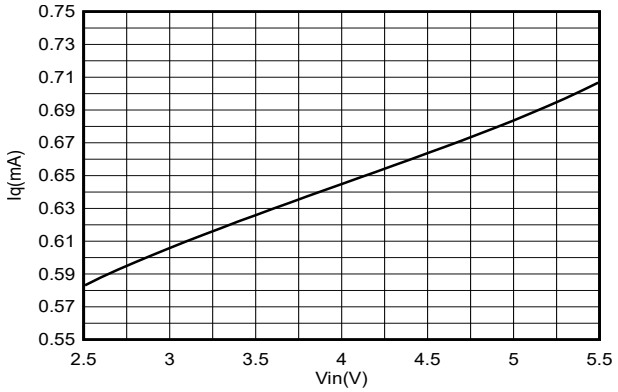

Figure 6-1. Quiescent Current vs Input Voltage

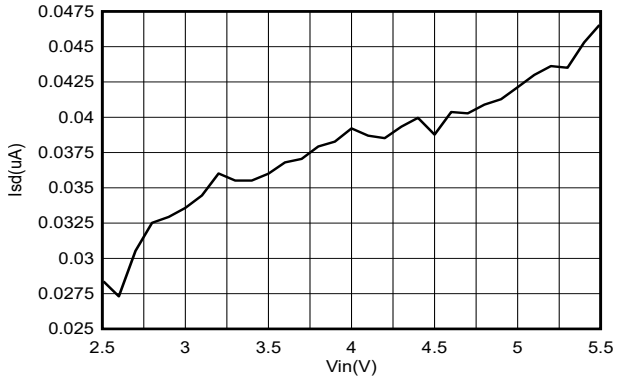

Figure 6-2. Shutdown Current vs Input Voltage

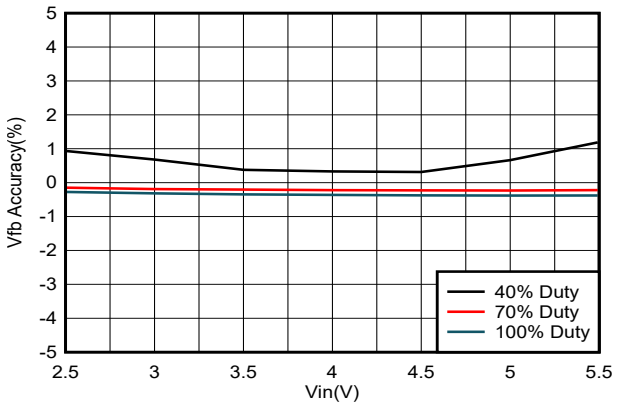

Figure 6-3. FB Voltage Accuracy

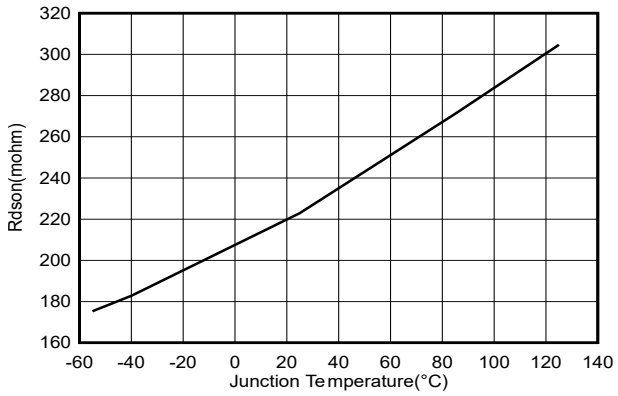

Figure 6-4. High-Side FET On Resistance vs Junction Temperature

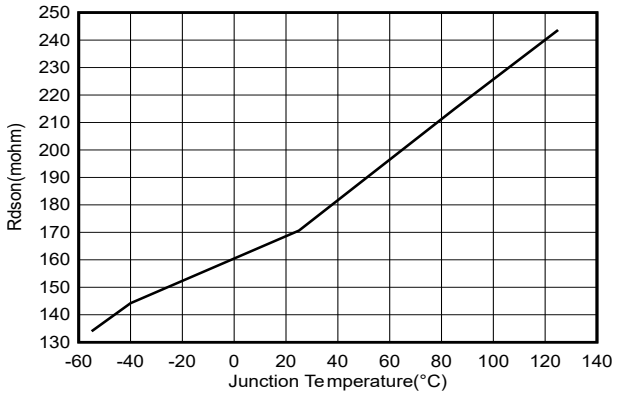

Figure 6-5. Low-Side FET On Resistance vs Junction Temperature

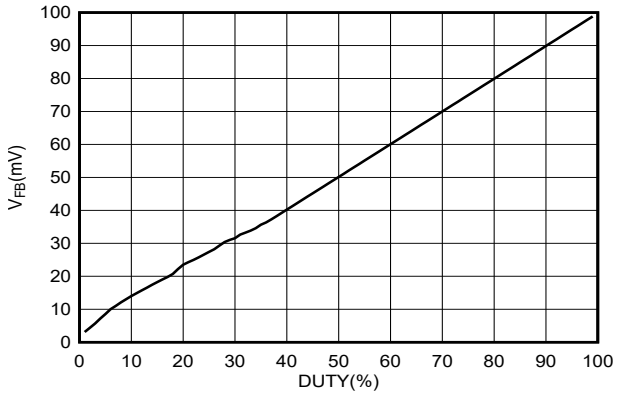

Figure 6-6. PWM duty cycle vs FB voltage

Copyright © 2024 Texas Instruments Incorporated

7 Detailed Description

7.1 Overview

The TPS92201 is a high-efficiency 1.5A synchronous buck-type LED driver with 2.5V to 5.5V input range. The device operates at typically 1.5MHz pulse width modulation (PWM) mode in full current range. In additional, TPS92201A can support Power Save Mode, the device operates in pulse width modulation (PWM) mode with 1.5MHz switching frequency at heavy load, similar as TPS92201. But at light load, the device automatically enters pulse frequency modulation (PFM) to maintain high efficiency over the entire load current range. In Power Save Mode, the converter reduces switching frequency and minimizes current consumption, the output voltage rises slightly above the nominal output voltage. This effect is minimized by increasing the output capacitor.

The integrated switches for both deivces have the capability to deliever up to 1.5A constant current and no need for external Schottky diode. Analog dimming is achieved by adjusting the duty cycle of the PWM in 1% to 100% range. Full protection methods are implemented including LED open, LED short, FB resistor open, FB resistor short and thermal shutdown.

7.2 Functional Block Diagram

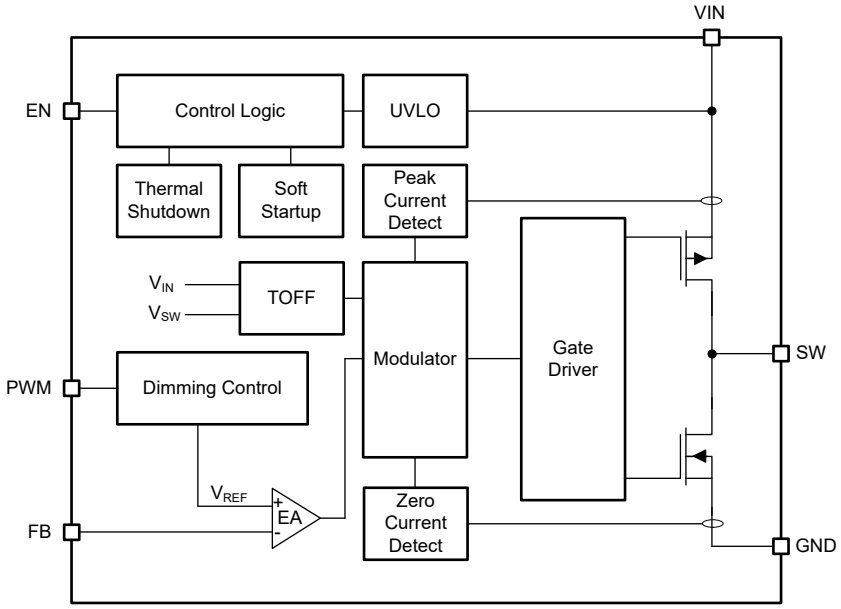

Figure 7-1. TPS92201 Functional Block Diagram

7.3 Feature Description

7.3.1 Adaptive Off-time Control

Adaptive off-time with peak current control scheme is used in the device. The device operates at typically 1.5MHz pulse width modulation (PWM) mode in full current range. At medium to heavy load, the device operates in pulse width modulation (PWM) mode with 1.5MHz switching frequency. At light load, the device automatically enters pulse frequency modulation (PFM) to maintain high efficiency over the entire load current range. Based on the VIN/VOUT ratio, a simple circuit sets the required off time for the low-side MOSFET. The switching frequency relatively constant regardless of the variation of input voltage, output voltage, and load current.

7.3.2 Power Save Mode

TPS92201A automatically enters Power Save Mode to improve efficiency at light load when the inductor current becomes discontinuous. In Power Save Mode, the converter reduces switching frequency and minimizes current consumption. In Power Save Mode, the output voltage rises slightly above the nominal output voltage. This effect is minimized by increasing the output capacitor.

Copyright © 2024 Texas Instruments Incorporated

7.3.3 Soft Startup

After enabling the device, internal soft startup circuitry ramps up the output voltage which reaches nominal output voltage during a startup time. Output current rises smoothly and excessive inrush current is avoided. In battery-power system, the soft startup prevents extra voltage drop on primary power supply with high internal impedance. The internal soft startup period is xx ms typically.

7.3.4 Low Dropout Operation

The device offers a low input-to-output voltage differential by entering 100% switching duty cycle mode. In this mode, the high-side MOSFET switch is constantly turned on and the low-side MOSFET is switched off. The minimum input voltage to maintain output regulation, depending on the load current and output voltage, is calculated as:

$$V_{IN_MIN} = V_{FB} + V_{F_IOUT} + I_{OUT} \times (R_{DS_ON} + R_L) \quad (1)$$

where

- V_{FB} is the feedback reference voltage, which is typically 100mV
- V_{F_IOUT} is the LED forward voltage at output current
- I_{OUT} is the output current setting
- R_{DS_ON} is the high-side FET resistance when turning on
- R_L is the inductor ohmic resistance DCR

7.3.5 LED Current Setting

The LED current is set by the external resistor between the FB pin and GND, calculated as:

$$I_{LED} = \frac{V_{FB}}{R_{SENSE}} \quad (2)$$

where

- V_{FB} is the feedback reference voltage, which is typically 100mV
- R_{SENSE} is the resistance between FB and GND

7.3.6 Voltage Reference

The feedback reference produces a precise ±5% voltage reference over whole temperature range when the PWM duty cycle is 100%, which is typically 100mV. In analog dimming mode, the feedback voltage is proportional to the duty cycle of PWM imput as shown in Figure 7-2.

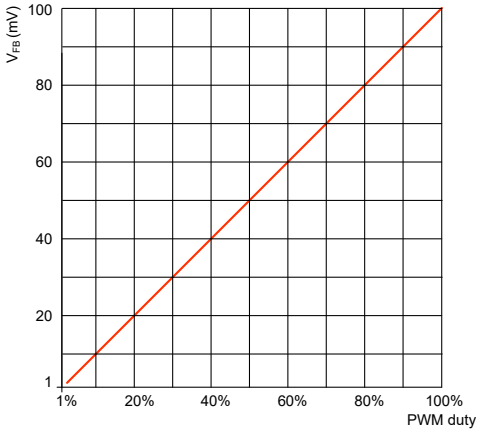

Figure 7-2. FB voltage with PWM duty cycle

Copyright © 2024 Texas Instruments Incorporated

7.3.7 Switch Current Limit

The switch current limit prevents the device from high inductor current and drawing excessive current from battery or input voltage supply. Excessive current might occur with a heavy load or shorted output circuit condition. The device adopts the peak current control by sensing the current of the high-side switch. Once the high-side switch current limit is reached, the high-side switch is turned off and low-side switch is turned on to discharge the inductor current with an adaptive off-time.

7.3.8 Fault Behaviors

The TPS92201 is protected by high-side current limitation in different fault conditions, such as LED open and short, sense resistor open and short. No matter the fault happens before startup or during operation, the device can stay safety.

Table 7-1. Fault protection conditions

Fault	Condition	Behavior
LED open	V_{FB} is driven close to 0	VOUT keeps increasing to VIN. and The high-side switch keeps turn on.
LED anode short to cathode	V_{FB} is driven to VOUT quickly, then	VFB is driven to VOUT quickly, the device keeps switching by minimum on-time.
LED anode short to GND	V_{FB} is driven close to 0	high-side switch current limit triggered
FB resistor open	V_{FB} is driven to VOUT - Vf	The device keeps switching by the minimum on-time
FB short to GND	V_{FB} is driven close to 0	VFB is driven close to 0. Current limit is triggered.

7.3.9 Under Voltage Lockout

To avoid mis-operation of the device at low input voltages, under voltage lockout is implemented that shuts down the device at voltages lower than V_{UVLO} with V_{HYS_UVLO} hysteresis.

7.3.10 Thermal Shutdown

The device enters thermal shutdown once the junction temperature exceeds the thermal shutdown rising threshold, T_{JSD}. Once the junction temperature falls below the falling threshold, the device returns to normal operation automatically.

7.4 Device Functional Modes

7.4.1 Enabling/Disabling the Device

The device is enabled by setting the EN input to a logic High. Accordingly, a logic Low disables the device. If the device is enabled, the internal power stage starts switching and regulates the output current to the set value. The EN input must be terminated and should not be floating.

Copyright © 2024 Texas Instruments Incorporated

8 Application and Implementation

Note

Information in the following applications sections is not part of the TI component specification, and TI does not warrant its accuracy or completeness. TI's customers are responsible for determining suitability of components for their purposes. Customers should validate and test their design implementation to confirm system functionality.

8.1 Application Information

The TPS92201 device is typically used as buck-type LED driver to drive IR or white LEDs from a 2.5V to 5.5V input.

8.2 Typical Application

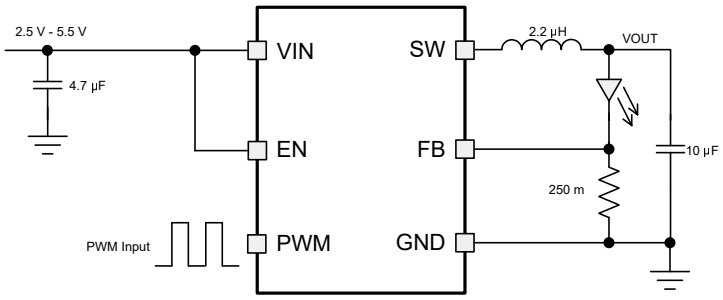

Figure 8-1. TPS92201 400mA Output Application

8.2.1 Design Requirements

For this design example, use the parameters listed in Table 8-1 as the input parameters.

Table 8-1. Design Parameters

DESIGN PARAMETER	EXAMPLE VALUE
Input voltage	2.5V to 5.5V
Output voltage	1.9V (1.8V Vf + 0.1V VFB)
Maximum output current	400mA

Table 8-2 lists the components used for the example.

Table 8-2. List of Components

REFERENCE	DESCRIPTION	MANUFACTURER(1)
C1	4.7µF, Ceramic Capacitor, 10V, X7R, size 0805, GRM21BR71A475KA73L	Murata
C2	10µF, Ceramic Capacitor, 10V, X7R, size 0805, GRM21BR71A106KE51L	Murata
L1	2.2µH, Power Inductor, SDER041H-2R2MS	Cyntec
R1,R2,R3	Chip resistor, 1%, size 0603	Std.
C3	Optional, 6.8pF if it is needed	Std.

(1) See *Third-party Products Disclaimer*

Copyright © 2024 Texas Instruments Incorporated

8.2.2 Detailed Design Procedure

8.2.2.1 Custom Design With WEBENCH® Tools

Click here to create a custom design using the TPS92201 device with the WEBENCH® Power Designer.

1. Start by entering the input voltage (V_{IN}), output voltage (V_{OUT}), and output current (I_{OUT}) requirements.
2. Optimize the design for key parameters such as efficiency, footprint, and cost using the optimizer dial.
3. Compare the generated design with other possible solutions from Texas Instruments.

The WEBENCH Power Designer provides a customized schematic along with a list of materials with real-time pricing and component availability.

In most cases, these actions are available:

- Run electrical simulations to see important waveforms and circuit performance
- Run thermal simulations to understand board thermal performance
- Export customized schematic and layout into popular CAD formats
- Print PDF reports for the design, and share the design with colleagues

Get more information about WEBENCH tools at www.ti.com/WEBENCH.

8.2.2.2 Setting the Output Voltage

When sizing R2, in order to achieve low current consumption and acceptable noise sensitivity, use a maximum of 200kΩ for R2. Larger currents through R2 improve noise sensitivity and output voltage accuracy but increase current consumption.

$$V_{OUT} = V_{FB} \times \left(1 + \frac{R1}{R2}\right) = 0.6V \times \left(1 + \frac{R1}{R2}\right) \quad (3)$$

A feed forward capacitor, C3 improves the loop bandwidth to make a fast transient response. 6.8pF capacitance is recommended for R2 of 100kΩ resistance. A more detailed discussion on the optimization for stability vs. transient response can be found in SLVA289.

8.2.2.3 Output Filter Design

The inductor and output capacitor together provide a low-pass filter. To simplify this process, Table 8-3 outlines possible inductor and capacitor value combinations. Checked cells represent combinations that are proven for stability by simulation and lab test. Further combinations should be checked for each individual application.

Table 8-3. Matrix of Output Capacitor and Inductor Combinations

V_{OUT} [V]	L [µH](1)	C_{OUT} [µF](2)				
		4.7	10	22	2x 22	100
0.6 ≤ V_{OUT} < 1.2	1				+	
	2.2				++(3)	
1.2 ≤ V_{OUT} < 1.8	1			+	+	
	2.2			++(3)	+	
1.8 ≤ V_{OUT}	1		+	+	+	
	2.2		++(3)	+	+	

(1) Inductor tolerance and current de-rating is anticipated. The effective inductance can vary by +20% and -30%.
(2) Capacitor tolerance and bias voltage de-rating is anticipated. The effective capacitance can vary by +20% and -50%.
(3) This LC combination is the standard value and recommended for most applications.

Copyright © 2024 Texas Instruments Incorporated

8.2.2.4 Inductor Selection

The main parameters for inductor selection is inductor value and then saturation current of the inductor. To calculate the maximum inductor current under static load conditions, Equation 4 is given:

$$I_{L,MAX} = I_{OUT,MAX} + \frac{\Delta I_L}{2}$$

$$\Delta I_L = V_{OUT} \times \frac{1 - \frac{V_{OUT}}{V_{IN}}}{L \times f_{SW}} \quad (4)$$

where:

- $I_{OUT,MAX}$ is the maximum output current
- ΔI_L is the inductor current ripple
- f_{SW} is the switching frequency
- L is the inductor value

It is recommended to choose a saturation current for the inductor that is approximately 20% to 30% higher than $I_{L,MAX}$. In addition, DC resistance and size should also be taken into account when selecting an appropriate inductor.

8.2.2.5 Input and Output Capacitor Selection

The architecture of the TPS92201 allows use of tiny ceramic-type output capacitors with low equivalent series resistance (ESR). These capacitors provide low output voltage ripple and are thus recommended. To keep its resistance up to high frequencies and to achieve narrow capacitance variation with temperature, it is recommended to use X7R or X5R dielectric.

The input capacitor is the low impedance energy source for the converter that helps provide stable operation. A low ESR multilayer ceramic capacitor is recommended for best filtering. For most applications, 4.7µF input capacitance is sufficient; a larger value reduces input voltage ripple.

The TPS92201 is designed to operate with an output capacitor of 10µF to 47µF, as outlined in Table 8-3.

Copyright © 2024 Texas Instruments Incorporated

8.2.3 Application Performance Curves

V_{IN} = 5V, V_{OUT} = 1.8V, L = 2.2µH, T_A = 25°C, unless otherwise noted.

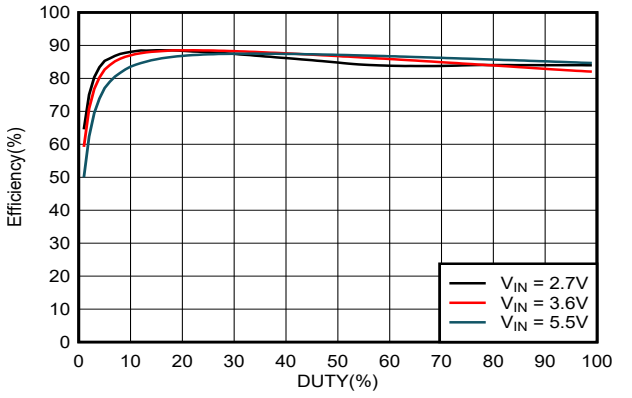

Iset = 1.5A L = 2.2µH 1 IRLED

Figure 8-2. 1 IRLED Output Efficiency

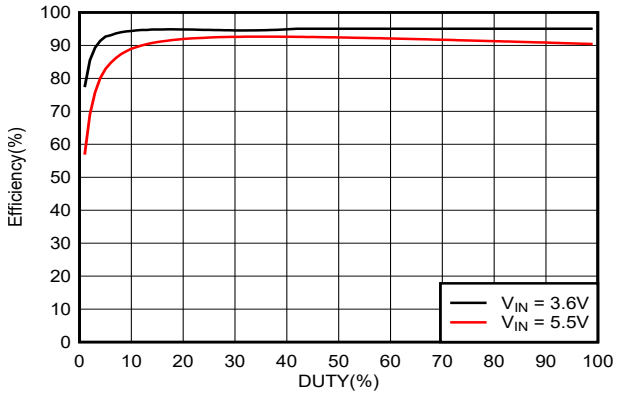

Iset = 1.5A L = 2.2µH 2 IRLED

Figure 8-3. 2 IRLED Output Efficiency

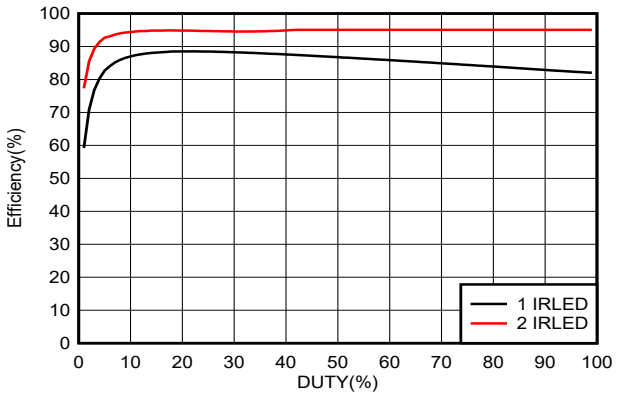

VIN = 3.6V Iset = 1.5A L = 2.2µH

Figure 8-4. Output Efficiency at 3.6V Input Voltage

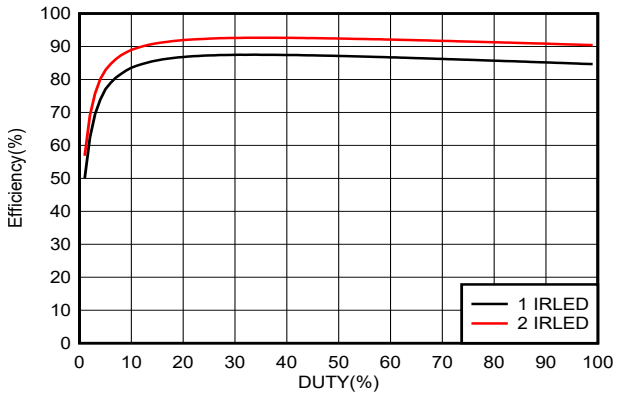

VIN = 5.5V Iset = 1.5A L = 2.2µH

Figure 8-5. Output Efficiency at 5.5V Input Voltage

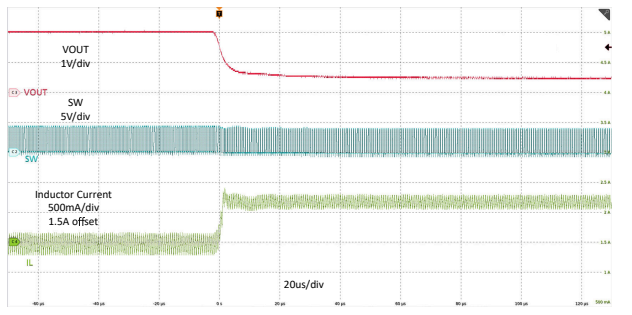

V_{IN} = 5V Iset = 1.5A

Figure 8-6. Vout short to GND protection

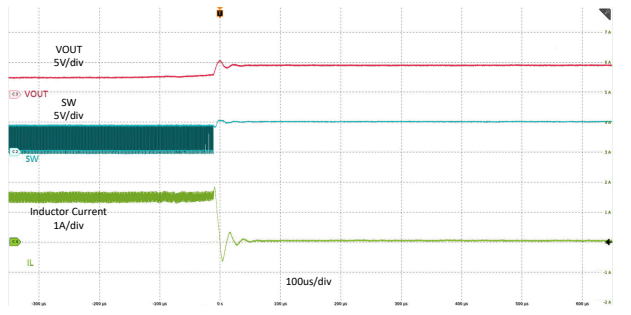

V_{IN} = 5V Iset = 1.5A

Figure 8-7. Vout Open Protection

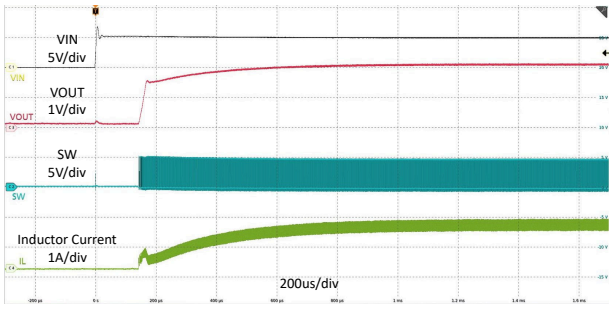

V_{IN} = 5V Iset = 1.5A L = 2.2µH

Figure 8-8. VIN Control Start Up with Load

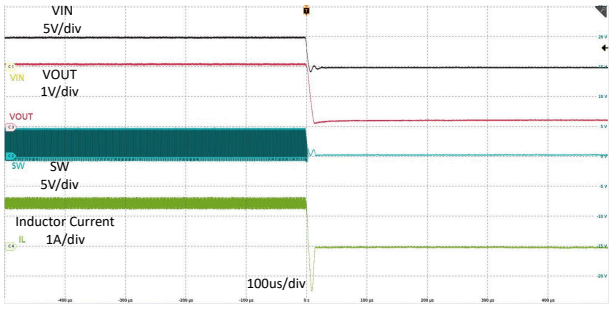

V_{IN} = 5V Iset = 1.5A L = 2.2µH

Figure 8-9. VIN Control Shutdown with Load

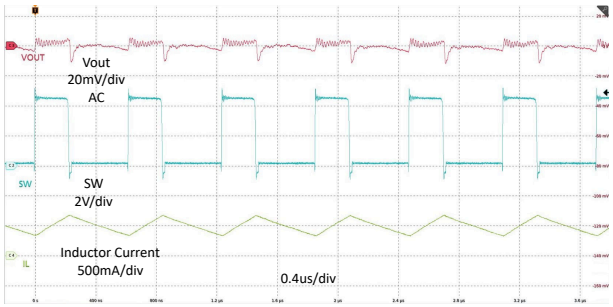

Vin = 5V I_{OUT} = 0.5A

Figure 8-10. PWM Operation

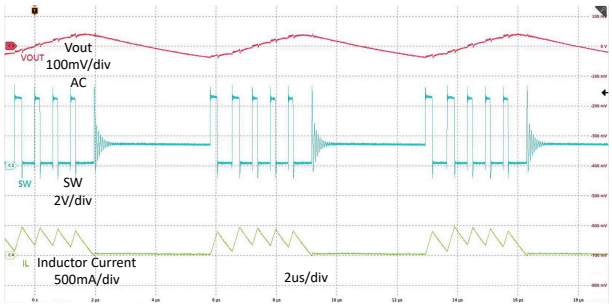

Vin = 5V I_{OUT} = 0.1A

Figure 8-11. Power Save Mode Operation

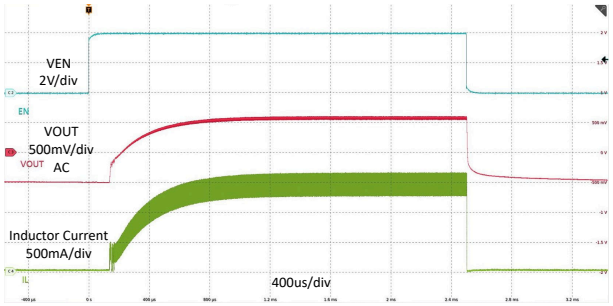

I_{OUT} = 1.5A L=2.2µH

Figure 8-12. EN Control Startup with Load

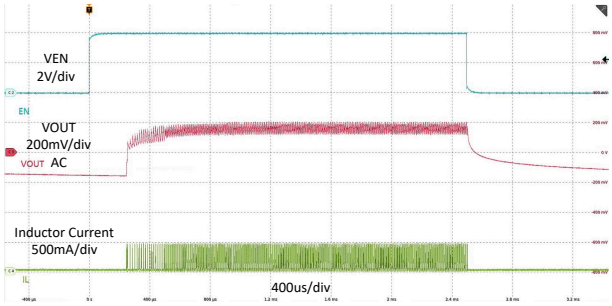

I_{OUT} = 0.1A L=2.2µH

Figure 8-13. EN Control Startup with Load

Copyright © 2024 Texas Instruments Incorporated

8.3 Power Supply Recommendations

The power supply to the TPS92201 must have a current rating according to the supply voltage, output voltage and output current.

8.4 Layout

8.4.1 Layout Guidelines

The PCB layout is an important step to maintain the high performance of the TPS92201 device.

- The input/output capacitors and the inductor should be placed as close as possible to the IC. This keeps the power traces short. Routing these power traces direct and wide results in low trace resistance and low parasitic inductance.
- The low side of the input and output capacitors must be connected properly to the power GND to avoid a GND potential shift.
- The sense traces connected to FB are signal traces. Special care should be taken to avoid noise being induced. Keep these traces away from SW nodes.
- GND layers might be used for shielding.

8.4.2 Layout Example

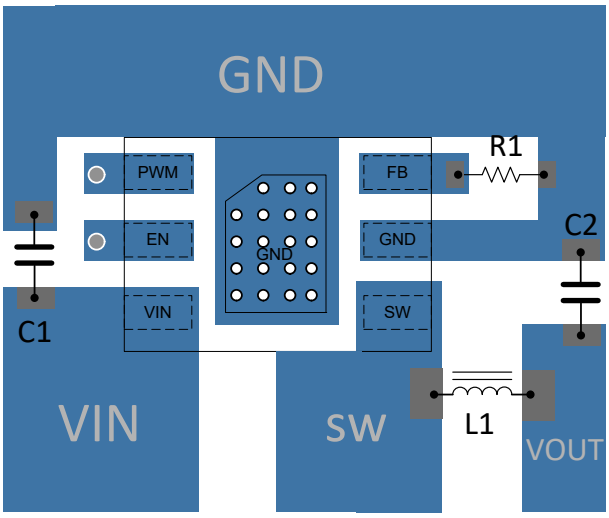

Figure 8-14. TPS92201WSON Layout

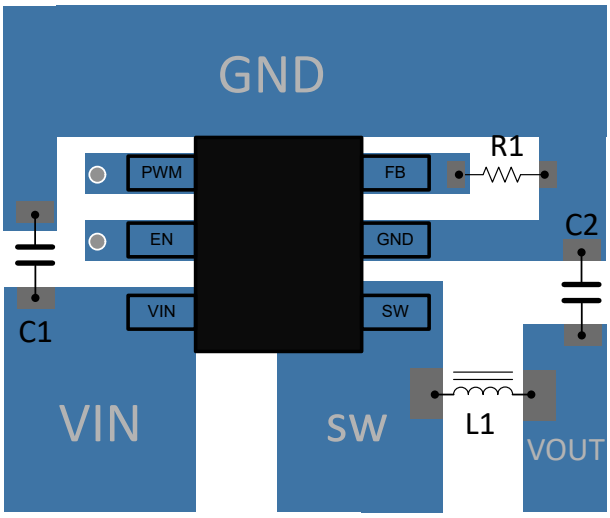

Figure 8-15. TPS92201SOT Layout

8.4.3 Thermal Considerations

Implementation of integrated circuits in low-profile and fine-pitch surface-mount packages typically requires special attention to power dissipation. Many system-dependent issues such as thermal coupling, airflow, convection surfaces, and the presence of other heat-generating components affect the power dissipation limits of a given component.

Two basic approaches for enhancing thermal performance are listed below:

- Improving the power dissipation capability of the PCB design
- Introducing airflow in the system

For more details on how to use the thermal parameters, see the application notes: Thermal Characteristics Application Notes SZZA017 and SPRA953.

Copyright © 2024 Texas Instruments Incorporated

9 Device and Documentation Support

9.1 Device Support

9.1.1 Custom Design With WEBENCH® Tools

Click here to create a custom design using the TPS92201 device with the WEBENCH® Power Designer.

1. Start by entering the input voltage (V_{IN}), output voltage (V_{OUT}), and output current (I_{OUT}) requirements.
2. Optimize the design for key parameters such as efficiency, footprint, and cost using the optimizer dial.
3. Compare the generated design with other possible solutions from Texas Instruments.

The WEBENCH Power Designer provides a customized schematic along with a list of materials with real-time pricing and component availability.

In most cases, these actions are available:

- Run electrical simulations to see important waveforms and circuit performance
- Run thermal simulations to understand board thermal performance
- Export customized schematic and layout into popular CAD formats
- Print PDF reports for the design, and share the design with colleagues

Get more information about WEBENCH tools at www.ti.com/WEBENCH.

9.2 Documentation Support

9.2.1 Related Documentation

Semiconductor and IC Package Thermal Metrics Application Report (SPRA953)

Thermal Characteristics of Linear and Logic Packages Using JEDEC PCB Designs Application Report (SZZA017)

9.3 Receiving Notification of Documentation Updates

To receive notification of documentation updates, navigate to the device product folder on ti.com. Click on *Notifications* to register and receive a weekly digest of any product information that has changed. For change details, review the revision history included in any revised document.

9.4 Support Resources

TI E2E™ support forums are an engineer's go-to source for fast, verified answers and design help — straight from the experts. Search existing answers or ask your own question to get the quick design help you need.

Linked content is provided "AS IS" by the respective contributors. They do not constitute TI specifications and do not necessarily reflect TI's views; see TI's Terms of Use.

9.5 Trademarks

TI E2E™ is a trademark of Texas Instruments.
All trademarks are the property of their respective owners.

9.6 Electrostatic Discharge Caution



This integrated circuit can be damaged by ESD. Texas Instruments recommends that all integrated circuits be handled with appropriate precautions. Failure to observe proper handling and installation procedures can cause damage.

ESD damage can range from subtle performance degradation to complete device failure. Precision integrated circuits may be more susceptible to damage because very small parametric changes could cause the device not to meet its published specifications.

9.7 Glossary

TI Glossary	This glossary lists and explains terms, acronyms, and definitions.

Copyright © 2024 Texas Instruments Incorporated

10 Revision History

NOTE: Page numbers for previous revisions may differ from page numbers in the current version.

Changes from Revision A (August 2024) to Revision B (August 2024)	Page
• Updated docuent to include the SOT563-6 package option	1

Changes from Revision * (November 2023) to Revision A (August 2024)	Page
• Updated the ORDERABLE PART NUMBER's marketing status of from Product Preview to Production Data	1
• Updated Device Comparison table to include the DRL package	2

Copyright © 2024 Texas Instruments Incorporated

11 Mechanical, Packaging, and Orderable Information

The following pages include mechanical, packaging, and orderable information. This information is the most current data available for the designated devices. This data is subject to change without notice and revision of this document. For browser-based versions of this data sheet, refer to the left-hand navigation.

Copyright © 2024 Texas Instruments Incorporated

PACKAGING INFORMATION

Orderable part number	Status (1)	Material type (2)	Package | Pins	Package qty | Carrier	RoHS (3)	Lead finish/ Ball material (4)	MSL rating/ Peak reflow (5)	Op temp (°C)	Part marking (6)
TPS92201ADRLR	Active	Production	SOT-5X3 (DRL) | 6	4000 | LARGE T&R	Yes	SN	Level-1-260C-UNLIM	-40 to 85	3GDH
TPS92201ADRLR.A	Active	Production	SOT-5X3 (DRL) | 6	4000 | LARGE T&R	Yes	SN	Level-1-260C-UNLIM	-40 to 85	3GDH
TPS92201ADRVR	Active	Production	WSON (DRV) | 6	3000 | LARGE T&R	Yes	NIPDAU | SN	Level-1-260C-UNLIM	-40 to 85	34MH
TPS92201ADRVR.A	Active	Production	WSON (DRV) | 6	3000 | LARGE T&R	Yes	NIPDAU	Level-1-260C-UNLIM	-40 to 85	34MH
TPS92201AMDRLR	Active	Production	SOT-5X3 (DRL) | 6	4000 | LARGE T&R	Yes	SN	Level-1-260C-UNLIM	-55 to 125	3GEH
TPS92201AMDRVR	Active	Production	WSON (DRV) | 6	3000 | LARGE T&R	Yes	SN	Level-1-260C-UNLIM	-55 to 125	3CZH
TPS92201AMDRVR.A	Active	Production	WSON (DRV) | 6	3000 | LARGE T&R	Yes	SN	Level-1-260C-UNLIM	-55 to 125	3CZH
TPS92201DRLR	Active	Production	SOT-5X3 (DRL) | 6	4000 | LARGE T&R	Yes	SN	Level-1-260C-UNLIM	-40 to 85	3GCH
TPS92201DRVR	Active	Production	WSON (DRV) | 6	3000 | LARGE T&R	Yes	NIPDAU | SN	Level-1-260C-UNLIM	-40 to 85	34LH
TPS92201DRVR.A	Active	Production	WSON (DRV) | 6	3000 | LARGE T&R	Yes	NIPDAU	Level-1-260C-UNLIM	-40 to 85	34LH
TPS92201MDRLR	Active	Production	SOT-5X3 (DRL) | 6	4000 | LARGE T&R	Yes	SN	Level-1-260C-UNLIM	-55 to 125	3GFH
TPS92201MDRVR	Active	Production	WSON (DRV) | 6	3000 | LARGE T&R	Yes	NIPDAU | SN	Level-1-260C-UNLIM	-55 to 125	3CXH
TPS92201MDRVR.A	Active	Production	WSON (DRV) | 6	3000 | LARGE T&R	Yes	NIPDAU	Level-1-260C-UNLIM	-55 to 125	3CXH

(1) **Status:** For more details on status, see our product life cycle.

(2) **Material type:** When designated, preproduction parts are prototypes/experimental devices, and are not yet approved or released for full production. Testing and final process, including without limitation quality assurance, reliability performance testing, and/or process qualification, may not yet be complete, and this item is subject to further changes or possible discontinuation. If available for ordering, purchases will be subject to an additional waiver at checkout, and are intended for early internal evaluation purposes only. These items are sold without warranties of any kind.

(3) **RoHS values:** Yes, No, RoHS Exempt. See the TI RoHS Statement for additional information and value definition.

(4) **Lead finish/Ball material:** Parts may have multiple material finish options. Finish options are separated by a vertical ruled line. Lead finish/Ball material values may wrap to two lines if the finish value exceeds the maximum column width.

(5) **MSL rating/Peak reflow:** The moisture sensitivity level ratings and peak solder (reflow) temperatures. In the event that a part has multiple moisture sensitivity ratings, only the lowest level per JEDEC standards is shown. Refer to the shipping label for the actual reflow temperature that will be used to mount the part to the printed circuit board.

(6) **Part marking:** There may be an additional marking, which relates to the logo, the lot trace code information, or the environmental category of the part.

Multiple part markings will be inside parentheses. Only one part marking contained in parentheses and separated by a "~" will appear on a part. If a line is indented then it is a continuation of the previous line and the two combined represent the entire part marking for that device.

Important Information and Disclaimer: The information provided on this page represents TI's knowledge and belief as of the date that it is provided. TI bases its knowledge and belief on information provided by third parties, and makes no representation or warranty as to the accuracy of such information. Efforts are underway to better integrate information from third parties. TI has taken and continues to take reasonable steps to provide representative and accurate information but may not have conducted destructive testing or chemical analysis on incoming materials and chemicals. TI and TI suppliers consider certain information to be proprietary, and thus CAS numbers and other limited information may not be available for release.

In no event shall TI's liability arising out of such information exceed the total purchase price of the TI part(s) at issue in this document sold by TI to Customer on an annual basis.

TAPE AND REEL INFORMATION

REEL DIMENSIONS

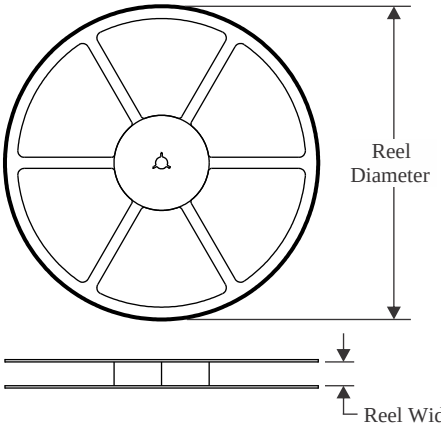

TAPE DIMENSIONS

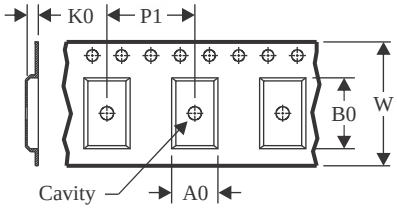

A0	Dimension designed to accommodate the component width
B0	Dimension designed to accommodate the component length
K0	Dimension designed to accommodate the component thickness
W	Overall width of the carrier tape
P1	Pitch between successive cavity centers

QUADRANT ASSIGNMENTS FOR PIN 1 ORIENTATION IN TAPE

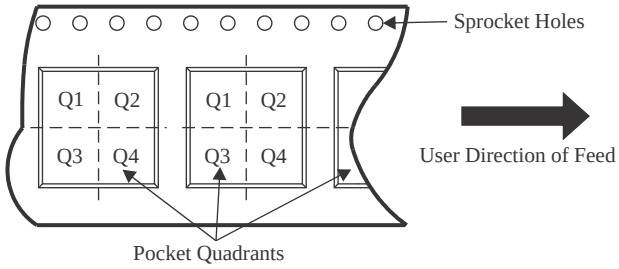

*All dimensions are nominal

Device	Package Type	Package Drawing	Pins	SPQ	Reel Diameter (mm)	Reel Width W1 (mm)	A0 (mm)	B0 (mm)	K0 (mm)	P1 (mm)	W (mm)	Pin1 Quadrant
TPS92201ADRLR	SOT-5X3	DRL	6	4000	180.0	8.4	1.8	1.8	0.75	4.0	8.0	Q3
TPS92201ADRVR	WSON	DRV	6	3000	178.0	8.4	2.3	2.3	1.15	4.0	8.0	Q2
TPS92201AMDRLR	SOT-5X3	DRL	6	4000	180.0	8.4	1.8	1.8	0.75	4.0	8.0	Q3
TPS92201AMDRVR	WSON	DRV	6	3000	180.0	8.4	2.3	2.3	1.15	4.0	8.0	Q2
TPS92201DRLR	SOT-5X3	DRL	6	4000	180.0	8.4	1.8	1.8	0.75	4.0	8.0	Q3
TPS92201DRVR	WSON	DRV	6	3000	178.0	8.4	2.3	2.3	1.15	4.0	8.0	Q2
TPS92201MDRLR	SOT-5X3	DRL	6	4000	180.0	8.4	1.8	1.8	0.75	4.0	8.0	Q3
TPS92201MDRVR	WSON	DRV	6	3000	180.0	8.4	2.3	2.3	1.15	4.0	8.0	Q2

TAPE AND REEL BOX DIMENSIONS

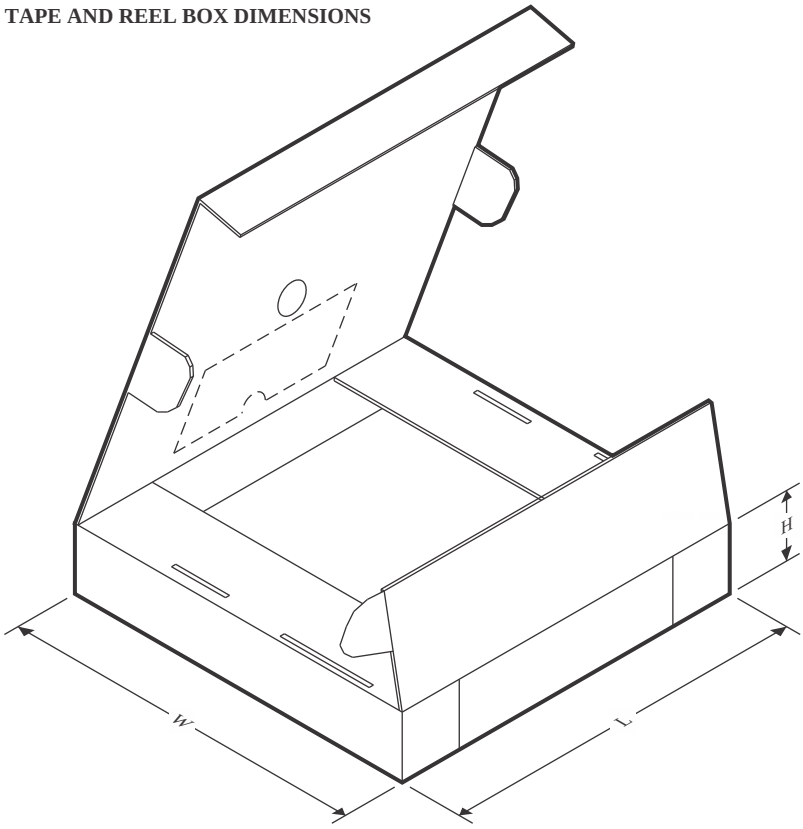

*All dimensions are nominal

Device	Package Type	Package Drawing	Pins	SPQ	Length (mm)	Width (mm)	Height (mm)
TPS92201ADRLR	SOT-5X3	DRL	6	4000	210.0	185.0	35.0
TPS92201ADRVR	WSON	DRV	6	3000	208.0	191.0	35.0
TPS92201AMDRLR	SOT-5X3	DRL	6	4000	210.0	185.0	35.0
TPS92201AMDRVR	WSON	DRV	6	3000	210.0	185.0	35.0
TPS92201DRLR	SOT-5X3	DRL	6	4000	210.0	185.0	35.0
TPS92201DRVR	WSON	DRV	6	3000	208.0	191.0	35.0
TPS92201MDRLR	SOT-5X3	DRL	6	4000	210.0	185.0	35.0
TPS92201MDRVR	WSON	DRV	6	3000	210.0	185.0	35.0



PACKAGE OUTLINE

DRL0006A

SOT - 0.6 mm max height

PLASTIC SMALL OUTLINE

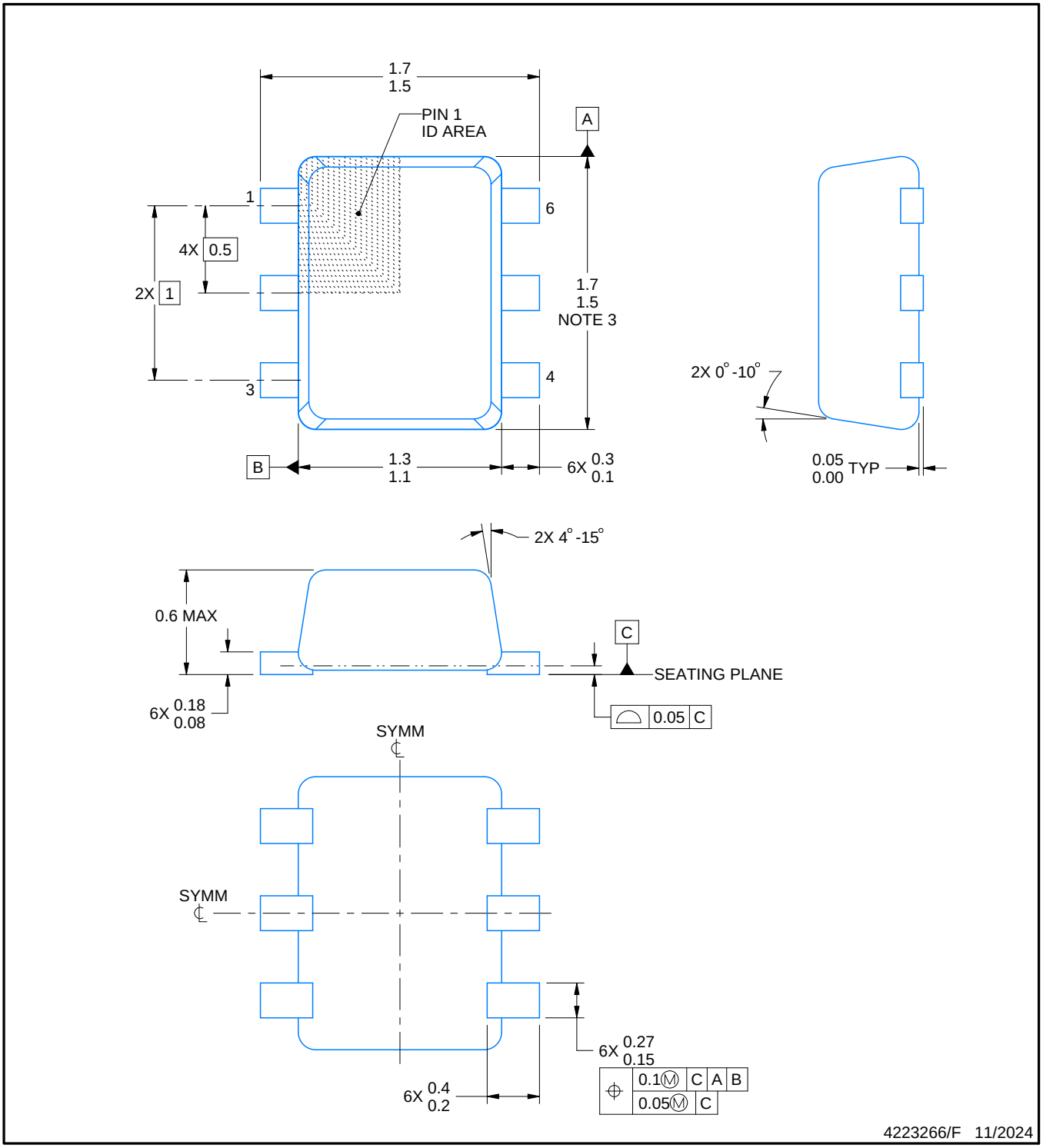

NOTES:

1. All linear dimensions are in millimeters. Any dimensions in parenthesis are for reference only. Dimensioning and tolerancing per ASME Y14.5M.
2. This drawing is subject to change without notice.
3. This dimension does not include mold flash, protrusions, or gate burrs. Mold flash, protrusions, or gate burrs shall not exceed 0.15 mm per side.
4. Reference JEDEC registration MO-293 Variation UAAD

EXAMPLE BOARD LAYOUT

DRL0006A

SOT - 0.6 mm max height

PLASTIC SMALL OUTLINE

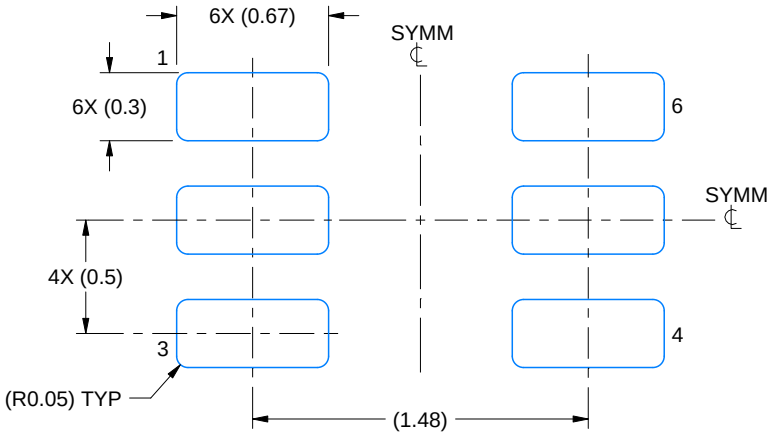

LAND PATTERN EXAMPLE
SCALE:30X

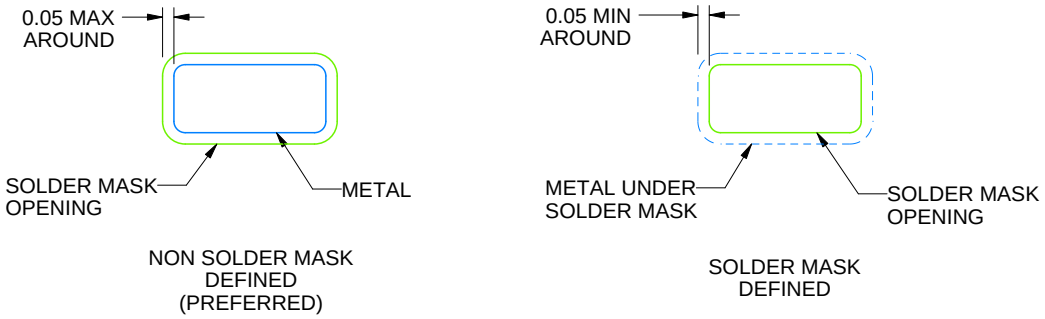

SOLDERMASK DETAILS

4223266/F 11/2024

NOTES: (continued)

5. Publication IPC-7351 may have alternate designs.
6. Solder mask tolerances between and around signal pads can vary based on board fabrication site.
7. Land pattern design aligns to IPC-610, Bottom Termination Component (BTC) solder joint inspection criteria.

EXAMPLE STENCIL DESIGN

DRL0006A

SOT - 0.6 mm max height

PLASTIC SMALL OUTLINE

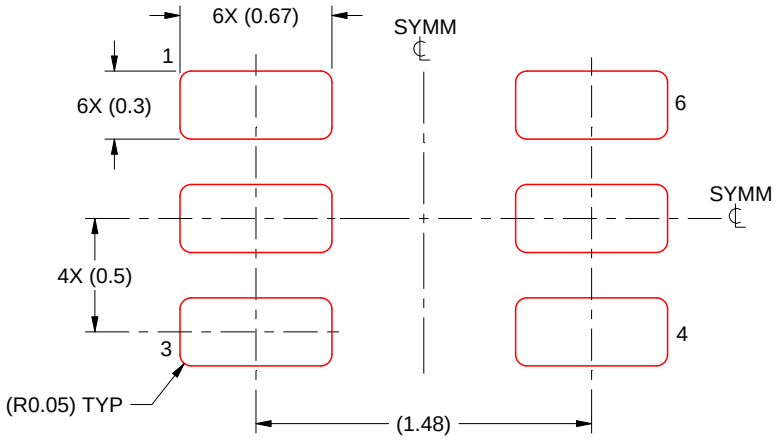

SOLDER PASTE EXAMPLE
BASED ON 0.1 mm THICK STENCIL
SCALE:30X

4223266/F 11/2024

NOTES: (continued)

8. Laser cutting apertures with trapezoidal walls and rounded corners may offer better paste release. IPC-7525 may have alternate design recommendations.
9. Board assembly site may have different recommendations for stencil design.

DRV 6 WSON - 0.8 mm max height

PLASTIC SMALL OUTLINE - NO LEAD

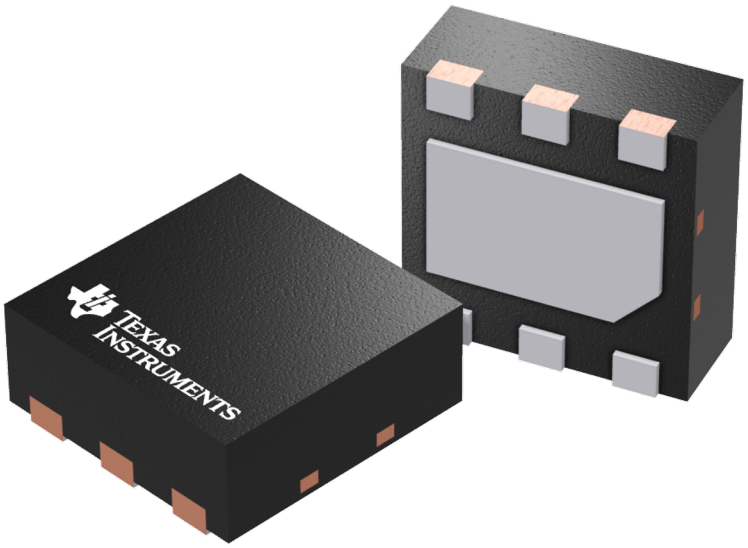

Images above are just a representation of the package family, actual package may vary.
Refer to the product data sheet for package details.

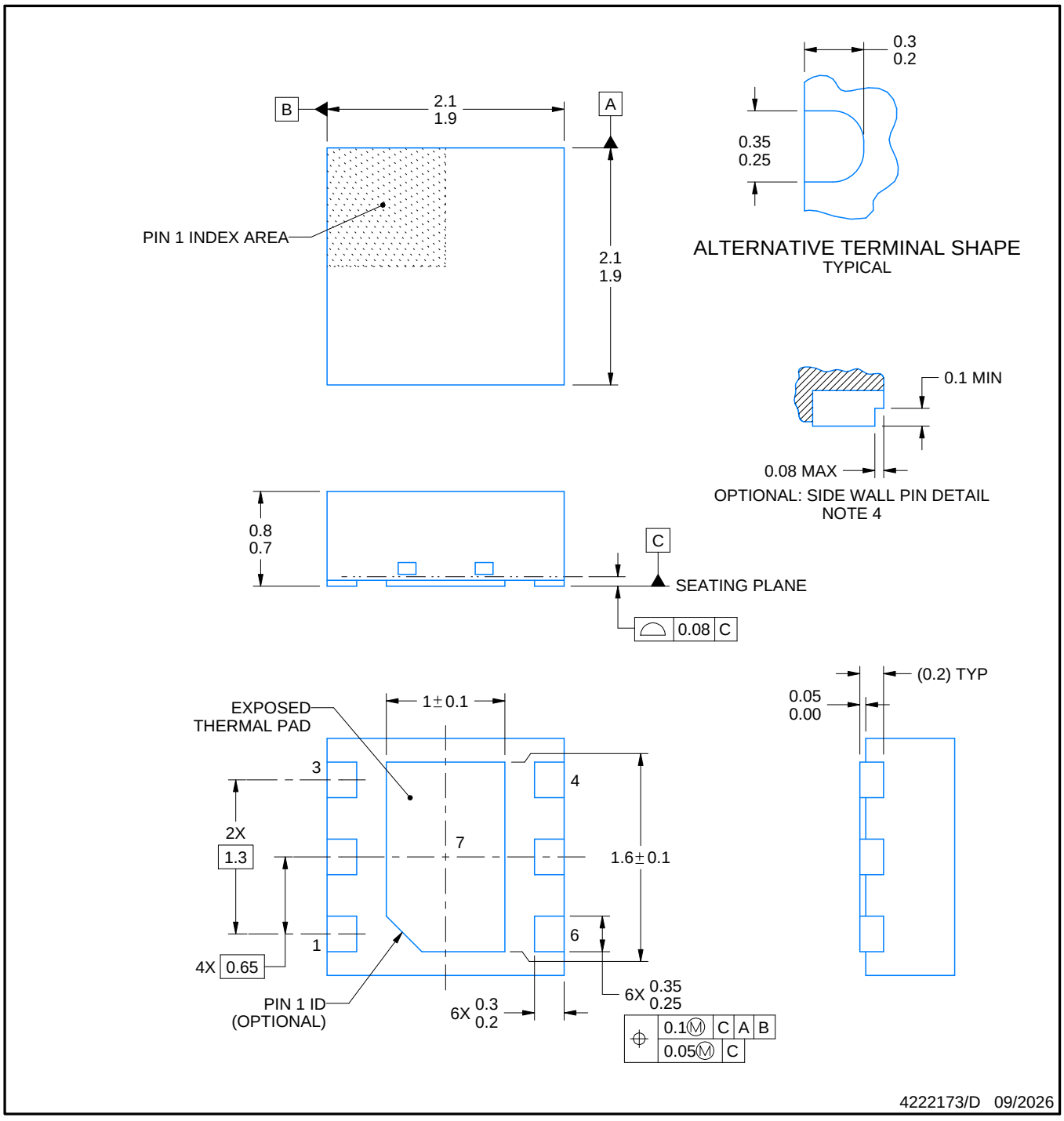

NOTES:

1. All linear dimensions are in millimeters. Any dimensions in parenthesis are for reference only. Dimensioning and tolerancing per ASME Y14.5M.
2. This drawing is subject to change without notice.
3. The package thermal pad must be soldered to the printed circuit board for thermal and mechanical performance.
4. Minimum 0.1 mm solder wetting on pin side wall. Available for wettable flank version only.

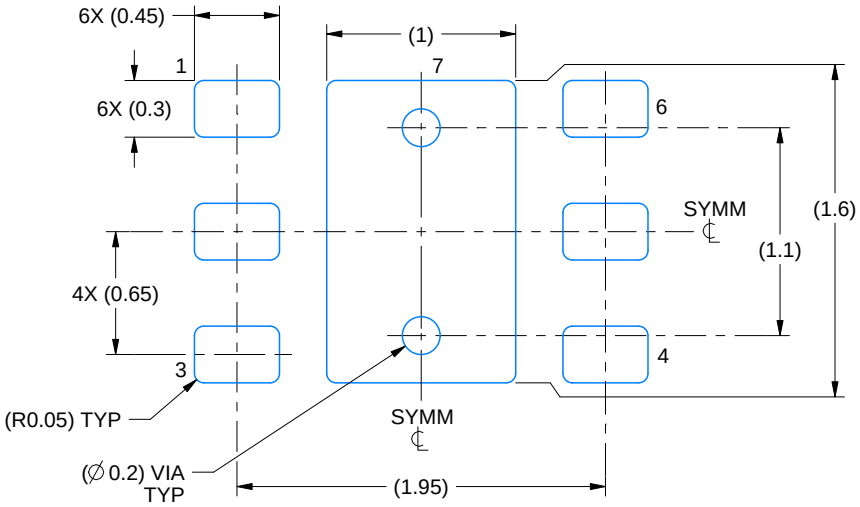

LAND PATTERN EXAMPLE
SCALE:25X

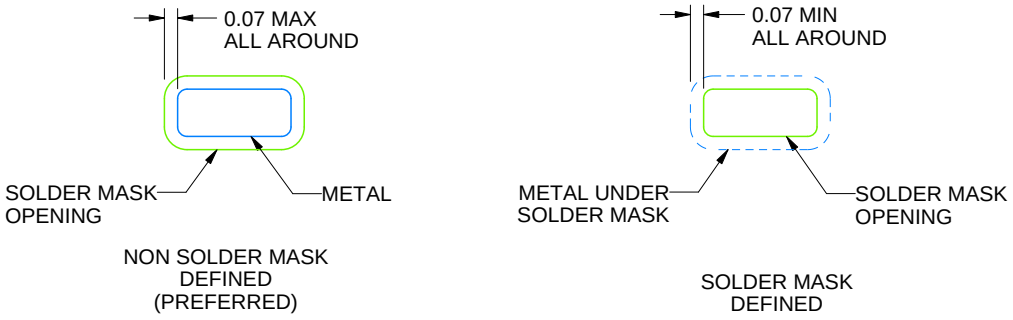

SOLDER MASK DETAILS

4222173/D 09/2026

NOTES: (continued)

5. This package is designed to be soldered to a thermal pad on the board. For more information, see Texas Instruments literature number SLUA271 (www.ti.com/lit/slua271).
6. Vias are optional depending on application, refer to device data sheet. If some or all are implemented, recommended via locations are shown.

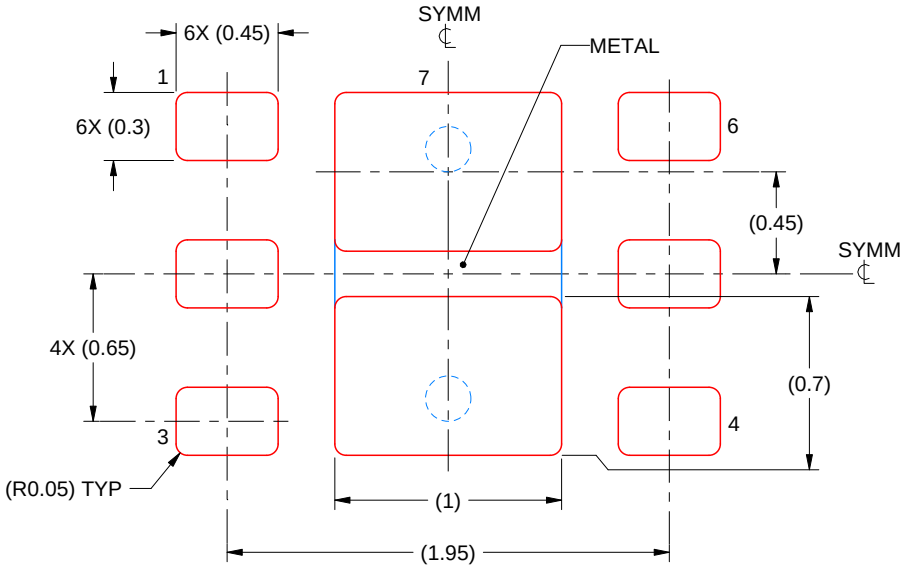

SOLDER PASTE EXAMPLE
BASED ON 0.125 mm THICK STENCIL

EXPOSED PAD #7
88% PRINTED SOLDER COVERAGE BY AREA UNDER PACKAGE
SCALE:30X

4222173/D 09/2026

NOTES: (continued)

7. Laser cutting apertures with trapezoidal walls and rounded corners may offer better paste release. IPC-7525 may have alternate design recommendations.

IMPORTANT NOTICE AND DISCLAIMER

TI PROVIDES TECHNICAL AND RELIABILITY DATA (INCLUDING DATASHEETS), DESIGN RESOURCES (INCLUDING REFERENCE DESIGNS), APPLICATION OR OTHER DESIGN ADVICE, WEB TOOLS, SAFETY INFORMATION, AND OTHER RESOURCES “AS IS” AND WITH ALL FAULTS, AND DISCLAIMS ALL WARRANTIES, EXPRESS AND IMPLIED, INCLUDING WITHOUT LIMITATION ANY IMPLIED WARRANTIES OF MERCHANTABILITY, FITNESS FOR A PARTICULAR PURPOSE OR NON-INFRINGEMENT OF THIRD PARTY INTELLECTUAL PROPERTY RIGHTS.

These resources are intended for skilled developers designing with TI products. You are solely responsible for (1) selecting the appropriate TI products for your application, (2) designing, validating and testing your application, and (3) ensuring your application meets applicable standards, and any other safety, security, regulatory or other requirements.

These resources are subject to change without notice. TI grants you permission to use these resources only for development of an application that uses the TI products described in the resource. Other reproduction and display of these resources is prohibited. No license is granted to any other TI intellectual property right or to any third party intellectual property right. TI disclaims responsibility for, and you fully indemnify TI and its representatives against any claims, damages, costs, losses, and liabilities arising out of your use of these resources.

TI’s products are provided subject to TI’s Terms of Sale, TI’s General Quality Guidelines, or other applicable terms available either on ti.com or provided in conjunction with such TI products. TI’s provision of these resources does not expand or otherwise alter TI’s applicable warranties or warranty disclaimers for TI products. Unless TI explicitly designates a product as custom or customer-specified, TI products are standard, catalog, general purpose devices.

TI objects to and rejects any additional or different terms you may propose.

Copyright © 2026, Texas Instruments Incorporated

Last updated 10/2025