Advanced Regulating Pulse Width Modulators

FEATURES

- Fully Interchangeable with Standard UC1524 Family
- Precision Reference Internally Trimmed to ±1%
- High-Performance Current Limit Function
- Under-Voltage Lockout with Hysteretic Turn-on
- Start-Up Supply Current Less Than 4mA
- Output Current to 200mA
- 60V Output Capability
- Wide Common-Mode Input Range for both Error and Current Limit Amplifiers
- PWM Latch Insures Single Pulse per Period
- Double Pulse Suppression Logic
- 200ns Shutdown through PWM Latch
- Ensured Frequency Accuracy
- Thermal Shutdown Protection

DESCRIPTION

The UC1524A family of regulating PWM ICs has been designed to retain the same highly versatile architecture of the industry standard UC1524 (SG1524) while offering substantial improvements to many of its limitations. The UC1524A is pin compatible with "non-A" models and in most existing applications can be directly interchanged with no effect on power supply performance. Using the UC1524A, however, frees the designer from many concerns which typically had required additional circuitry to solve.

The UC1524A includes a precise 5V reference trimmed to ±1% accuracy, eliminating the need for potentiometer adjustments; an error amplifier with an input range which includes 5V, eliminating the need for a reference divider; a current sense amplifier useful in either the ground or power supply output lines; and a pair of 60V, 200mA uncommitted transistor switches which greatly enhance output versatility.

An additional feature of the UC1524A is an under-voltage lockout circuit which disables all the internal circuitry, except the reference, until the input voltage has risen to 8V. This holds standby current low until turn-on, greatly simplifying the design of low power, off-line supplies. The turn-on circuit has approximately 600mV of hysteresis for jitter-free activation.

Other product enhancements included in the UC1524A's design include a PWM latch which insures freedom from multiple pulsing within a period, even in noisy environments, logic to eliminate double pulsing on a single output, a 200ns external shutdown capability, and automatic thermal protection from excessive chip temperature. The oscillator circuit of the UC1524A is usable beyond 500kHz and is now easier to synchronize with an external clock pulse.

The UC1524A is packaged in a hermetic 16-pin DIP and is rated for operation from -55°C to +125°C. The UC2524A and 3524A are available in either ceramic or plastic packages and are rated for operation from -40°C to +85°C and 0°C to 70°C, respectively. Surface mount devices are also available.

BLOCK DIAGRAM

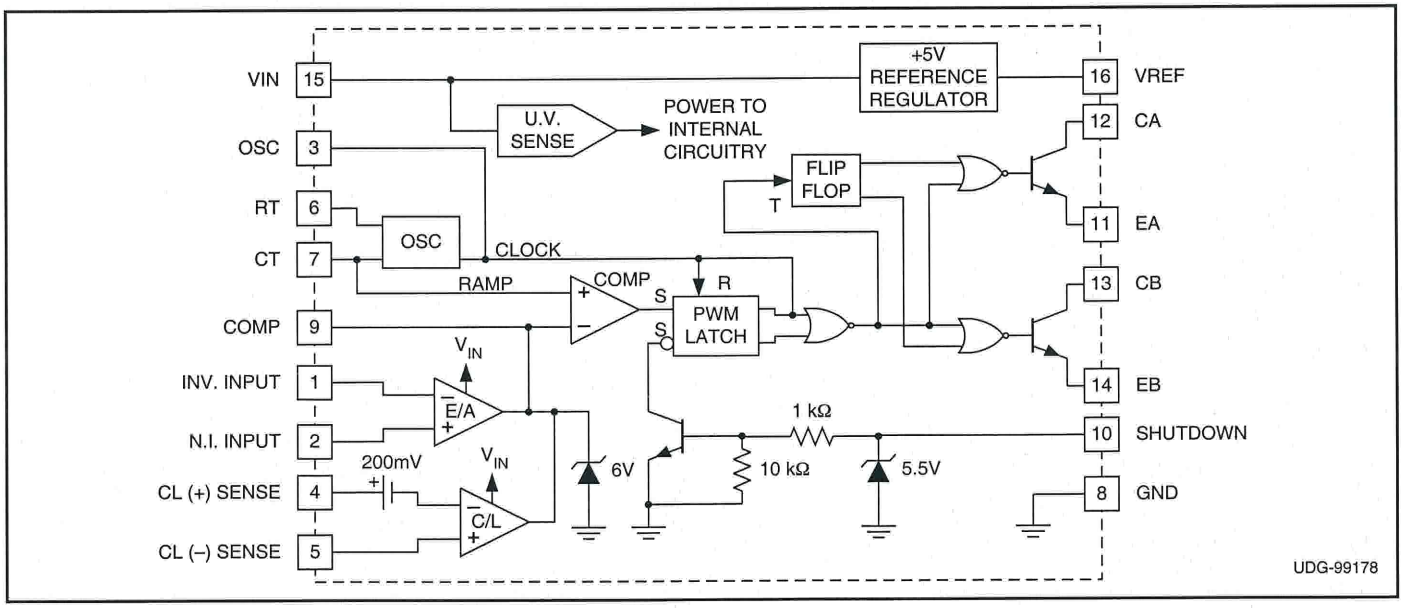

ABSOLUTE MAXIMUM RATINGS

Supply Voltage (V_{IN}) 40V
Collector Supply Voltage (V_C) 60V
Output Current (each Output) 200mA
Maximum Forced Voltage (Pin 9, 10) . . . . . -3 to +5V
Maximum Forced Current (Pin 9, 10) . . . . . ±10mA
Reference Output Current 50mA
Oscillator Charging Current 5mA
Power Dissipation at T_A = +25°C 1000mW
Power Dissipation at T_C = +25°C 2000mW
Operating Temperature Range . . . . . -55°C to +125°C
Storage Temperature Range . . . . . -65°C to +150°C
Lead Temperature, (Soldering, 10 seconds) . . . . . +300°C
Note: Consult packaging section of Databook for thermal limitations and considerations of package.

CONNECTION DIAGRAMS

DIL-16, SOIC-16 (TOP VIEW)
J or N Package, DW Package

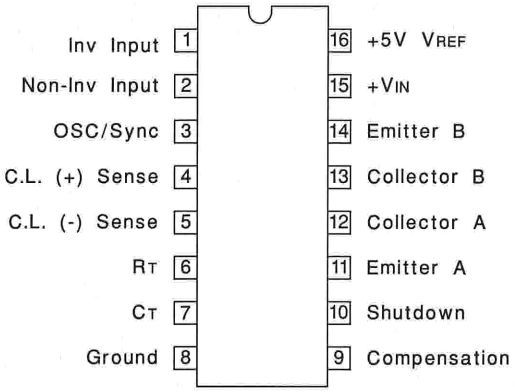

PLCC-20, LCC-20 (TOP VIEW)
Q or L Package

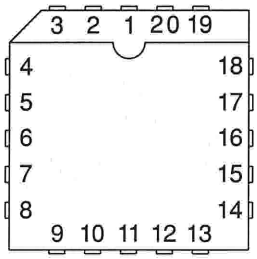

PACKAGE PIN FUNCTION	
FUNCTION	PIN
N/C	1
Inv. Input	2
Non-Inv. Input	3
OSC/SYNC	4
C.L. (+) sense	5
N/C	6
C.L. (-) sense	7
R_T	8
C_T	9
Ground	10
N/C	11
Compensation	12
Shutdown	13
Emitter A	14
Collector A	15
N/C	16
Collector B	17
Emitter B	18
+V_{IN}	19
+5V V_{REF}	20

ELECTRICAL CHARACTERISTICS:

Unless otherwise stated, these specifications apply for T_A = -55°C to +125°C for the UC1524A, -40° to +85°C for the UC2524A, and 0°C to + 70°C for the UC3524A; V_{IN} = V_C = 20V, T_A = T_J.

PARAMETER	TEST CONDITIONS	UC1524A / UC2524A			UC3524A			UNITS
		MIN	TYP	MAX	MIN	TYP	MAX	
Turn-on Characteristics								
Input Voltage	Operating Range after Turn-on	8		40	8		40	V
Turn-on Threshold		6.5	7.5	8.5	6.5	7.5	8.5	V
Turn-on Current	V_{IN} = 6V		2.5	4		2.5	4	mA
Operating Current	V_{IN} = 8 to 40V		5	10		5	10	mA
Turn-on Hysteresis*			0.5			0.5		V
Reference Section								
Output Voltage	T_J = 25°C	4.95	5.00	5.05	4.90	5.00	5.10	V
	Over Operating Range	4.9		5.1	4.85		5.15	V
Line Regulation	V_{IN} = 10 to 40V		10	20		10	30	mV
Load Regulation	I_L = 0 to 20 mA		20	25		20	35	mV
Temperature Stability*	Over Operating Range*		20	25		20	35	mV
Short Circuit Current	V_{REF} = 0, 25°C ≤ T_J ≤ 125°C		80	100		80	100	mA
Output Noise Voltage*	10Hz ≤ f ≤ 10kHz, T_J =25°C		40			40		μVrms
Long Term Stability*	T_J =125°C, 1000 Hrs.		20	50		20	50	mV

** These parameters are ensured by design but not 100% tested in production.*

ELECTRICAL CHARACTERISTICS: Unless otherwise stated, these specifications apply for T_A = -55°C to +125°C for the UC1524A, -40° to +85°C for the UC2524A, and 0°C to + 70°C for the UC3524A; V_{IN} = V_C = 20V, T_A = T_J.

PARAMETER	TEST CONDITIONS	UC1524A / UC2524A			UC3524A			UNITS
		MIN	TYP	MAX	MIN	TYP	MAX	
Oscillator Section (Unless otherwise specified, R_T = 2700Ω, C_T = 0.01 mfd)								
Initial Accuracy	T_J = 25°C	41	43	45	39	43	47	kHz
	Over Operating Range	40.2		45.9	38.2		47.9	kHz
Temperature Stability*	Over Operating Temperature Range		1	2		1	2	%
Minimum Frequency	R_T = 150kΩ, C_T = 0.1mfd			140			120	Hz
Maximum Frequency	R_T = 2.0kΩ, C_T = 470pF	500			500			kHz
Output Amplitude*		3	3.5		3	3.5		V
Output Pulse Width*		0.29	0.5	1.0	0.3	0.5	1.0	µs
Ramp Peak		3.3	3.5	3.7	3.3	3.5	3.7	V
Ramp Valley	T_J = 25°C	0.7	0.8	0.9	0.7	0.8	0.9	V
Ramp Valley T.C.			-1.0			-1.0		mV/°C
Error Amplifier Section (Unless otherwise specified, V_{CM} = 2.5V)								
Input Offset Voltage			0.5	5		2	10	mV
Input Bias Current			1	5		1	10	µA
Input Offset Current			.05	1		0.5	1	µA
Common Mode Rejection Ratio	V_{CM} = 1.5 to 5.5V	70	80		70	80		dB
Power Supply Rejection Ratio	V_{IN} = 10 to 40V	70	80		70	80		dB
Output Swing (Note 1)		5.0		0.5	5.0		0.5	V
Open Loop Voltage Gain	ΔV_O= 1 to 4V, $R_L \geq$ 10MΩ	72	80		64	80		dB
Gain-Bandwidth*	T_J = 25°C, A_V = 0dB	1	3		1	3		MHz
DC Transconductance*§	T_J = 25°C, 30kΩ ≤ R_L ≤ 1MΩ	1.7	2.3		1.7	2.3		mS
P.W.M. Comparator (R_T = 2kΩ, C_T = 0.01mfd)								
Minimum Duty Cycle	V_{COMP} = 0.5V			0			0	%
Maximum Duty Cycle	V_{COMP} = 3.8V	45			45			%
Current Limit Amplifier (Unless otherwise specified, Pin 5 = 0V)								
Input Offset Voltage	T_J = 25°C, E/A Set for Maximum Output	190	200	210	180	200	220	mV
	Over Operating Temperature Range	180		220	170		230	mV
Input Bias Current			-1	-10		-1	-10	µA
Common Mode Rejection Ratio	$V_{(pin\ 5)}$ = -0.3V to + 5.5V	50	60		50	60		dB
Power Supply Rejection Ratio	V_{IN} = 10 to 40V	50	60		50	60		dB
Output Swing (Note 1)	Minimum Total Range	5.0		0.5	5.0		0.5	V
Open-Loop Voltage Gain	ΔV_O = 1 to 4V, $R_L \geq$ 10MΩ	70	80		70	80		dB
Delay Time*	Pin 4 to Pin 9, ΔV_{IN} = 300mV		300			300		ns
Output Section (Each Output)								
Collector Emitter Voltage	I_C = 100µA	60	80		60	80		V
Collector Leakage Current	V_{CE} = 50V		.1	20		.1	20	µA

** These parameters are ensured by design but not 100% tested in production.*

§ DC transconductance (g_M) relates to DC open-loop voltage gain according to the following equation: $A_V = g_M R_L$ where R_L is the resistance from pin 9 to the common mode voltage.

The minimum g_M specification is used to calculate minimum A_V when the error amplifier output is loaded.

Note 1: Min Limit applies to output high level, max limit applies to output low level.

ELECTRICAL CHARACTERISTICS: Unless otherwise stated, these specifications apply for T_A = -55°C to +125°C for the UC1524A, -40° to +85°C for the UC2524A, and 0°C to + 70°C for the UC3524A; V_{IN} = V_C = 20V. T_A = T_J.

PARAMETER	TEST CONDITIONS	UC1524A / UC2524A			UC3524A			UNITS
		MIN	TYP	MAX	MIN	TYP	MAX	
Output Section (cont.) (Each Output)								
Saturation Voltage	I_C = 20mA I_C = 200mA		.2 1	.4 2.2		.2 1	.4 2.2	V V
Emitter Output Voltage	I_E = 50mA	17	18		17	18		V
Rise Time*	T_J = 25°C, R = 2kΩ		120	400		120	400	ns
Fall Time*	T_J = 25°C, R = 2kΩ		25	200		25	200	ns
Comparator Delay*	T_J = 25°C, Pin 9 to output		300			300		ns
Shutdown Delay*	T_J = 25°C, Pin 10 to output		200			200		ns
Shutdown Threshold	T_J = 25°C, R_C = 2kΩ	0.6	.7	1.0	0.6	.7	1.0	V
S/D Threshold Over Temp.	Over Operating Temperature Range	0.4		1.2	0.4		1.0	V
Thermal Shutdown*			165			165		°C

** These parameters are ensured by design but not 100% tested in production.*

OPEN-LOOP CIRCUIT

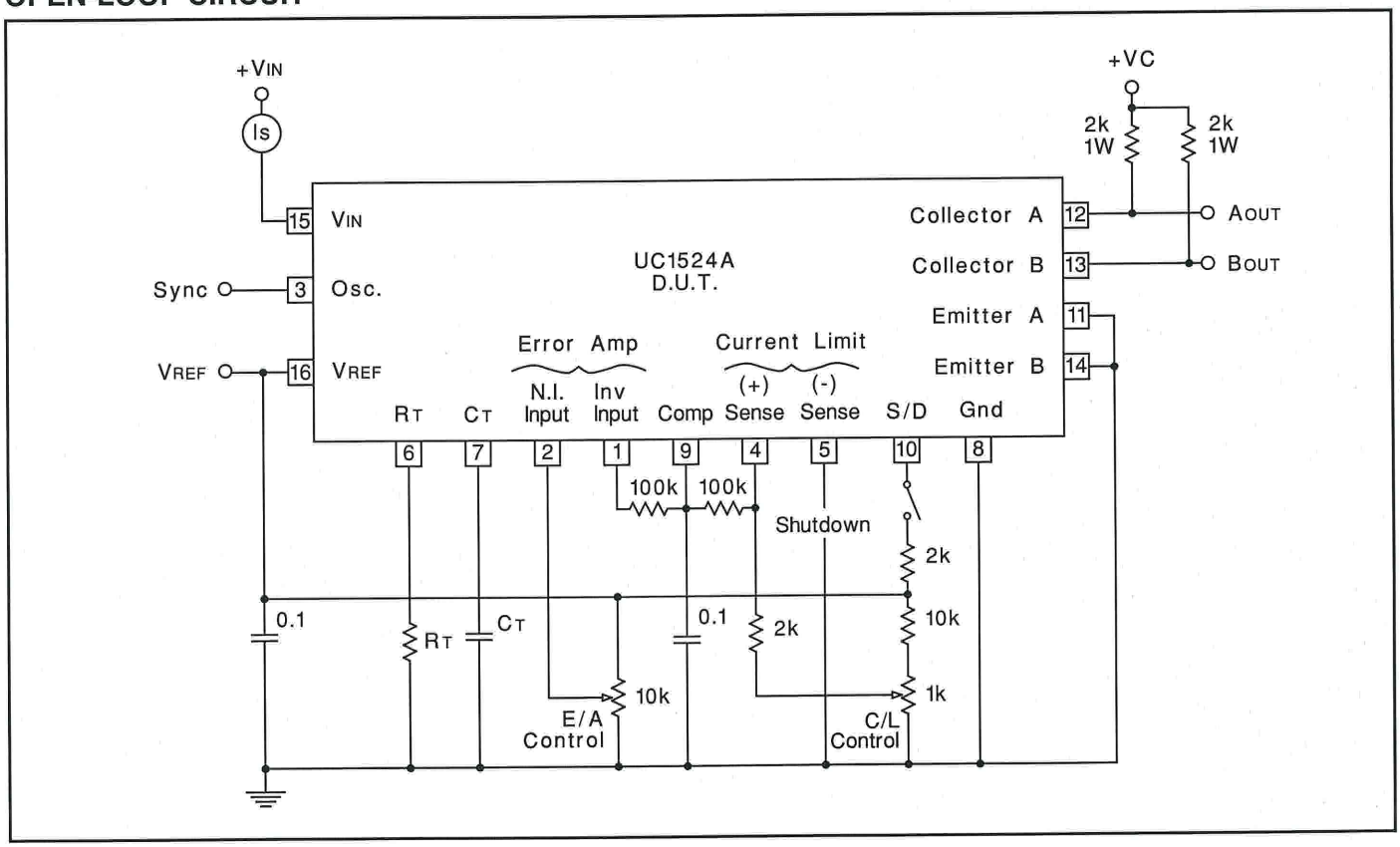

Supply Current vs Voltage

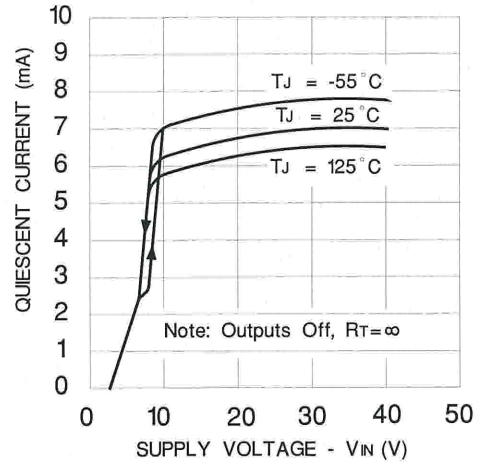

Error Amplifier Voltage Gain and Phase vs Frequency

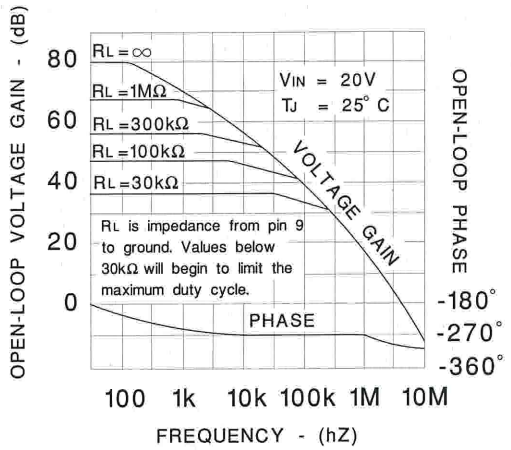

Pulse Width Modulator Transfer Function

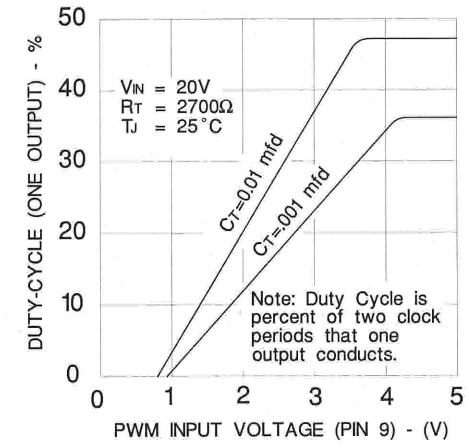

Oscillator Frequency vs Timing Components

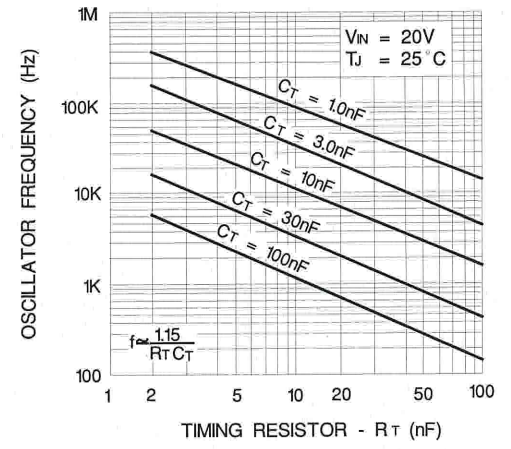

Output Dead Time vs Timing Capacitor Value

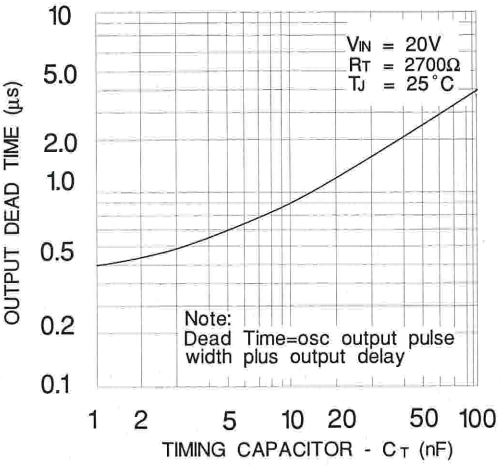

Output Saturation Voltage

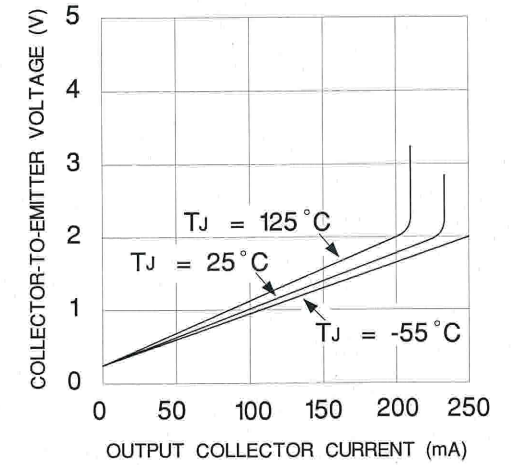

Current Limit Amplifier Delay

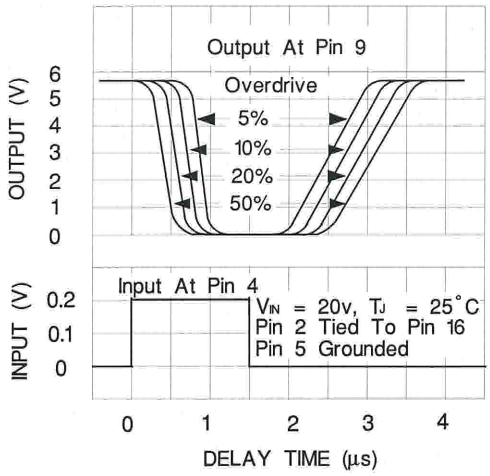

Shutdown Delay From PWM Comparator - Pin 9

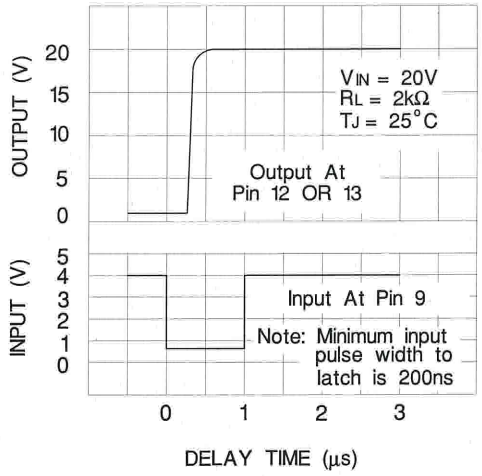

Turn-Off Delay From Shutdown - Pin 10

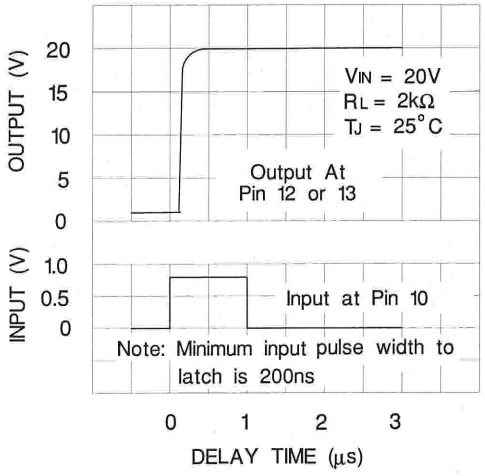

PACKAGING INFORMATION

Orderable part number	Status (1)	Material type (2)	Package | Pins	Package qty | Carrier	RoHS (3)	Lead finish/ Ball material (4)	MSL rating/ Peak reflow (5)	Op temp (°C)	Part marking (6)
5962-8764502EA	Active	Production	CDIP (J) | 16	25 | TUBE	No	SNPB	N/A for Pkg Type	-55 to 125	5962-8764502EA
5962-8764502EA.A	Active	Production	CDIP (J) | 16	25 | TUBE	No	SNPB	N/A for Pkg Type	-55 to 125	5962-8764502EA
UC1524AJ	NRND	Production	CDIP (J) | 16	25 | TUBE	No	SNPB	N/A for Pkg Type	-55 to 125	UC1524AJ
UC1524AJ.A	NRND	Production	CDIP (J) | 16	25 | TUBE	No	SNPB	N/A for Pkg Type	-55 to 125	UC1524AJ
UC1524AJ883B	NRND	Production	CDIP (J) | 16	25 | TUBE	No	SNPB	N/A for Pkg Type	-55 to 125	UC1524AJ/883B
UC1524AJ883B.A	NRND	Production	CDIP (J) | 16	25 | TUBE	No	SNPB	N/A for Pkg Type	-55 to 125	UC1524AJ/883B
UC1524AL	Active	Production	LCCC (FK) | 20	55 | TUBE	No	SNPB	N/A for Pkg Type	-55 to 125	UC1524AL
UC1524AL.A	Active	Production	LCCC (FK) | 20	55 | TUBE	No	SNPB	N/A for Pkg Type	-55 to 125	UC1524AL
UC1524AL883B	Active	Production	LCCC (FK) | 20	55 | TUBE	No	SNPB	N/A for Pkg Type	-55 to 125	UC1524AL/ 883B
UC1524AL883B.A	Active	Production	LCCC (FK) | 20	55 | TUBE	No	SNPB	N/A for Pkg Type	-55 to 125	UC1524AL/ 883B
UC2524ADW	NRND	Production	SOIC (DW) | 16	40 | TUBE	Yes	NIPDAU	Level-2-260C-1 YEAR	-40 to 85	UC2524ADW
UC2524ADW.A	NRND	Production	SOIC (DW) | 16	40 | TUBE	Yes	NIPDAU	Level-2-260C-1 YEAR	-40 to 85	UC2524ADW
UC2524ADWG4	NRND	Production	SOIC (DW) | 16	40 | TUBE	Yes	NIPDAU	Level-2-260C-1 YEAR	-40 to 85	UC2524ADW
UC2524ADWTR	NRND	Production	SOIC (DW) | 16	2000 | LARGE T&R	Yes	NIPDAU	Level-2-260C-1 YEAR	-40 to 85	UC2524ADW
UC2524ADWTR.A	NRND	Production	SOIC (DW) | 16	2000 | LARGE T&R	Yes	NIPDAU	Level-2-260C-1 YEAR	-40 to 85	UC2524ADW
UC2524AJ	NRND	Production	CDIP (J) | 16	25 | TUBE	No	SNPB	N/A for Pkg Type	-40 to 85	UC2524AJ
UC2524AJ.A	NRND	Production	CDIP (J) | 16	25 | TUBE	No	SNPB	N/A for Pkg Type	-40 to 85	UC2524AJ
UC2524AN	NRND	Production	PDIP (N) | 16	25 | TUBE	Yes	NIPDAU	N/A for Pkg Type	-40 to 85	UC2524AN
UC2524AN.A	NRND	Production	PDIP (N) | 16	25 | TUBE	Yes	NIPDAU	N/A for Pkg Type	-40 to 85	UC2524AN
UC3524ADW	NRND	Production	SOIC (DW) | 16	40 | TUBE	Yes	NIPDAU	Level-2-260C-1 YEAR	0 to 70	UC3524ADW
UC3524ADW.A	NRND	Production	SOIC (DW) | 16	40 | TUBE	Yes	NIPDAU	Level-2-260C-1 YEAR	0 to 70	UC3524ADW
UC3524ADWTR	NRND	Production	SOIC (DW) | 16	2000 | LARGE T&R	Yes	NIPDAU	Level-2-260C-1 YEAR	0 to 70	UC3524ADW
UC3524ADWTR.A	NRND	Production	SOIC (DW) | 16	2000 | LARGE T&R	Yes	NIPDAU	Level-2-260C-1 YEAR	0 to 70	UC3524ADW
UC3524AJ	Active	Production	CDIP (J) | 16	25 | TUBE	No	SNPB	N/A for Pkg Type	0 to 70	UC3524AJ
UC3524AJ.A	Active	Production	CDIP (J) | 16	25 | TUBE	No	SNPB	N/A for Pkg Type	0 to 70	UC3524AJ
UC3524AN	NRND	Production	PDIP (N) | 16	25 | TUBE	Yes	NIPDAU	N/A for Pkg Type	0 to 70	UC3524AN
UC3524AN.A	NRND	Production	PDIP (N) | 16	25 | TUBE	Yes	NIPDAU	N/A for Pkg Type	0 to 70	UC3524AN
UC3524ANG4	NRND	Production	PDIP (N) | 16	25 | TUBE	Yes	NIPDAU	N/A for Pkg Type	0 to 70	UC3524AN

(1) **Status:** For more details on status, see our product life cycle.

(2) **Material type:** When designated, preproduction parts are prototypes/experimental devices, and are not yet approved or released for full production. Testing and final process, including without limitation quality assurance, reliability performance testing, and/or process qualification, may not yet be complete, and this item is subject to further changes or possible discontinuation. If available for ordering, purchases will be subject to an additional waiver at checkout, and are intended for early internal evaluation purposes only. These items are sold without warranties of any kind.

(3) **RoHS values:** Yes, No, RoHS Exempt. See the TI RoHS Statement for additional information and value definition.

(4) **Lead finish/Ball material:** Parts may have multiple material finish options. Finish options are separated by a vertical ruled line. Lead finish/Ball material values may wrap to two lines if the finish value exceeds the maximum column width.

(5) **MSL rating/Peak reflow:** The moisture sensitivity level ratings and peak solder (reflow) temperatures. In the event that a part has multiple moisture sensitivity ratings, only the lowest level per JEDEC standards is shown. Refer to the shipping label for the actual reflow temperature that will be used to mount the part to the printed circuit board.

(6) **Part marking:** There may be an additional marking, which relates to the logo, the lot trace code information, or the environmental category of the part.

Multiple part markings will be inside parentheses. Only one part marking contained in parentheses and separated by a "~" will appear on a part. If a line is indented then it is a continuation of the previous line and the two combined represent the entire part marking for that device.

Important Information and Disclaimer: The information provided on this page represents TI's knowledge and belief as of the date that it is provided. TI bases its knowledge and belief on information provided by third parties, and makes no representation or warranty as to the accuracy of such information. Efforts are underway to better integrate information from third parties. TI has taken and continues to take reasonable steps to provide representative and accurate information but may not have conducted destructive testing or chemical analysis on incoming materials and chemicals. TI and TI suppliers consider certain information to be proprietary, and thus CAS numbers and other limited information may not be available for release.

In no event shall TI's liability arising out of such information exceed the total purchase price of the TI part(s) at issue in this document sold by TI to Customer on an annual basis.

OTHER QUALIFIED VERSIONS OF UC1524A, UC2524A, UC2524AM, UC3524A, UC3524AM :

- Catalog : UC3524A, UC2524A, UC3524AM, UC3524A
- Military : UC2524AM, UC1524A, UC1524A

NOTE: Qualified Version Definitions:

- Catalog - TI's standard catalog product
- Military - QML certified for Military and Defense Applications

TAPE AND REEL INFORMATION

REEL DIMENSIONS

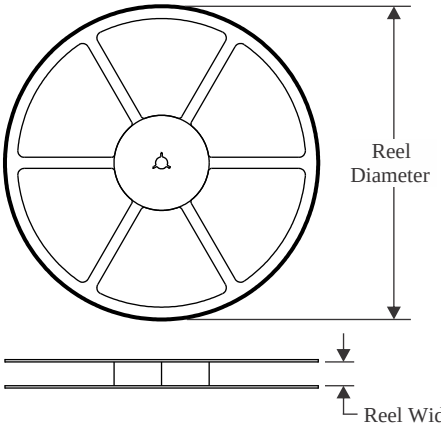

TAPE DIMENSIONS

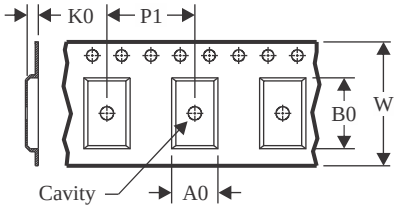

A0	Dimension designed to accommodate the component width
B0	Dimension designed to accommodate the component length
K0	Dimension designed to accommodate the component thickness
W	Overall width of the carrier tape
P1	Pitch between successive cavity centers

QUADRANT ASSIGNMENTS FOR PIN 1 ORIENTATION IN TAPE

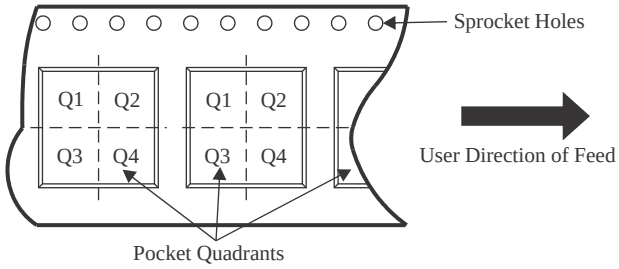

*All dimensions are nominal

Device	Package Type	Package Drawing	Pins	SPQ	Reel Diameter (mm)	Reel Width W1 (mm)	A0 (mm)	B0 (mm)	K0 (mm)	P1 (mm)	W (mm)	Pin1 Quadrant
UC2524ADWTR	SOIC	DW	16	2000	330.0	16.4	10.75	10.7	2.7	12.0	16.0	Q1
UC3524ADWTR	SOIC	DW	16	2000	330.0	16.4	10.75	10.7	2.7	12.0	16.0	Q1

TAPE AND REEL BOX DIMENSIONS

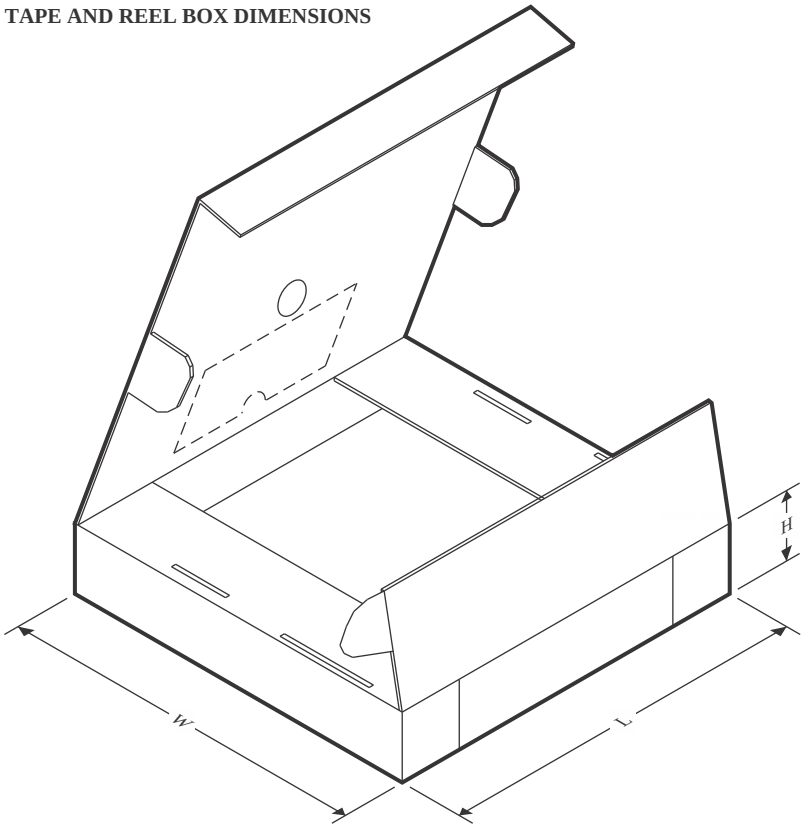

*All dimensions are nominal

Device	Package Type	Package Drawing	Pins	SPQ	Length (mm)	Width (mm)	Height (mm)
UC2524ADWTR	SOIC	DW	16	2000	353.0	353.0	32.0
UC3524ADWTR	SOIC	DW	16	2000	353.0	353.0	32.0

TUBE

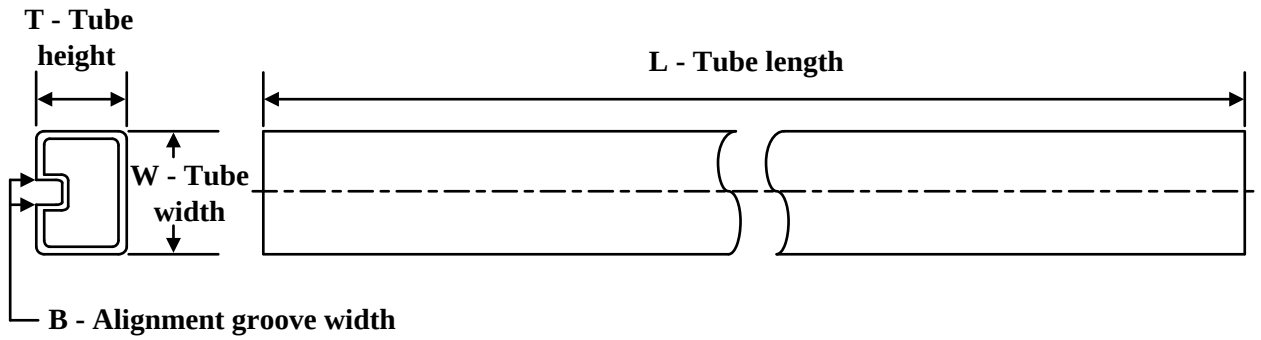

*All dimensions are nominal

Device	Package Name	Package Type	Pins	SPQ	L (mm)	W (mm)	T (µm)	B (mm)
UC1524AL	FK	LCCC	20	55	506.98	12.06	2030	NA
UC1524AL.A	FK	LCCC	20	55	506.98	12.06	2030	NA
UC1524AL883B	FK	LCCC	20	55	506.98	12.06	2030	NA
UC1524AL883B.A	FK	LCCC	20	55	506.98	12.06	2030	NA
UC2524ADW	DW	SOIC	16	40	507	12.83	5080	6.6
UC2524ADW.A	DW	SOIC	16	40	507	12.83	5080	6.6
UC2524ADWG4	DW	SOIC	16	40	507	12.83	5080	6.6
UC2524AN	N	PDIP	16	25	506	13.97	11230	4.32
UC2524AN.A	N	PDIP	16	25	506	13.97	11230	4.32
UC3524ADW	DW	SOIC	16	40	507	12.83	5080	6.6
UC3524ADW.A	DW	SOIC	16	40	507	12.83	5080	6.6
UC3524AN	N	PDIP	16	25	506	13.97	11230	4.32
UC3524AN.A	N	PDIP	16	25	506	13.97	11230	4.32
UC3524ANG4	N	PDIP	16	25	506	13.97	11230	4.32

GENERIC PACKAGE VIEW

DW 16

SOIC - 2.65 mm max height

7.5 x 10.3, 1.27 mm pitch

SMALL OUTLINE INTEGRATED CIRCUIT

This image is a representation of the package family, actual package may vary.
Refer to the product data sheet for package details.

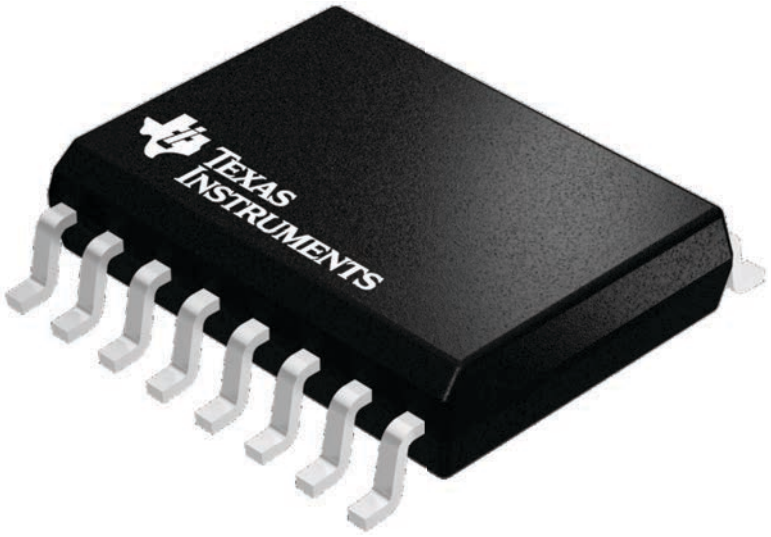

4224780/A

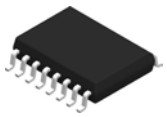

PACKAGE OUTLINE

DW0016A

SOIC - 2.65 mm max height

SOIC

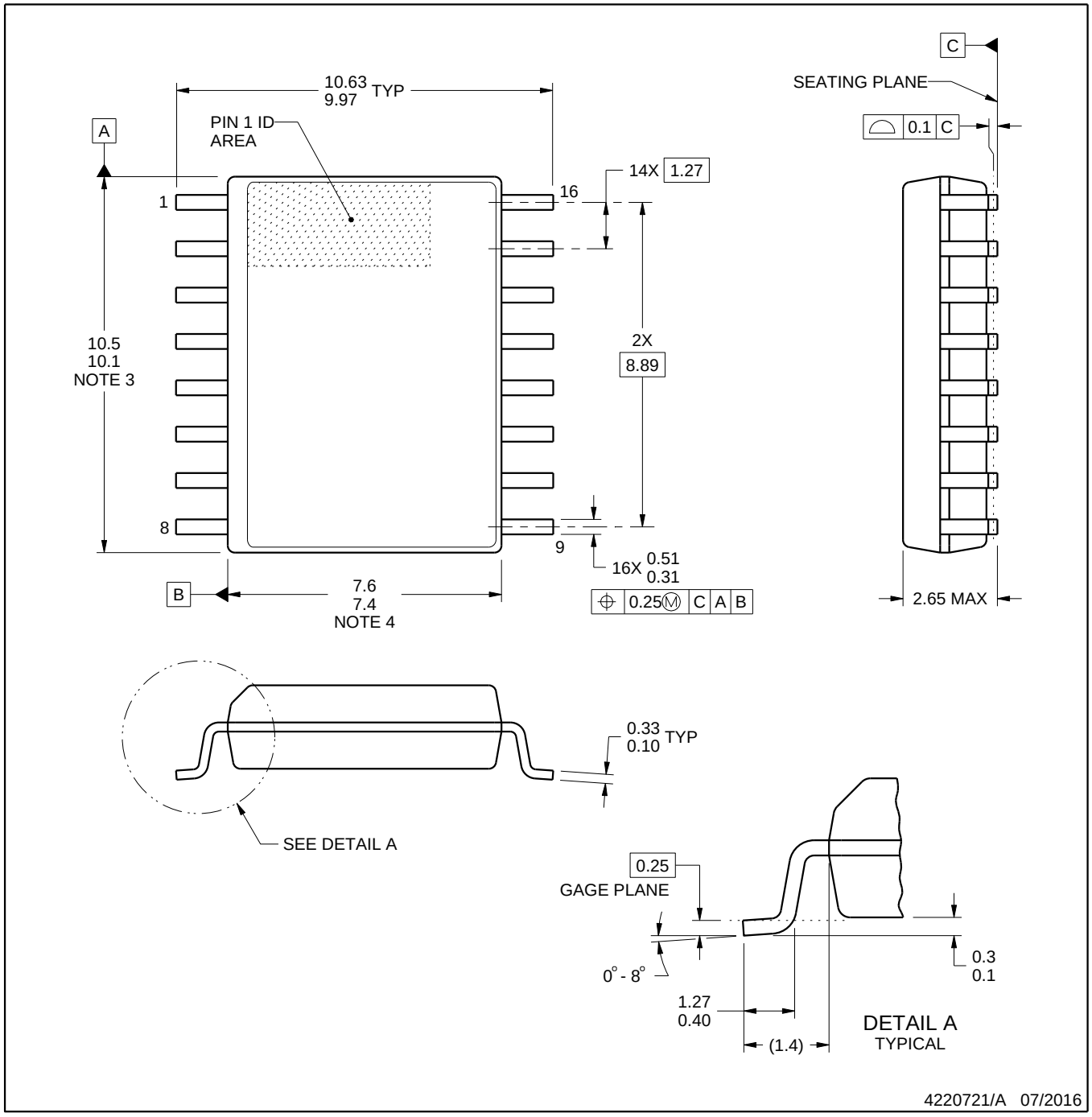

NOTES:

1. All linear dimensions are in millimeters. Dimensions in parenthesis are for reference only. Dimensioning and tolerancing per ASME Y14.5M.
2. This drawing is subject to change without notice.
3. This dimension does not include mold flash, protrusions, or gate burrs. Mold flash, protrusions, or gate burrs shall not exceed 0.15 mm, per side.
4. This dimension does not include interlead flash. Interlead flash shall not exceed 0.25 mm, per side.
5. Reference JEDEC registration MS-013.

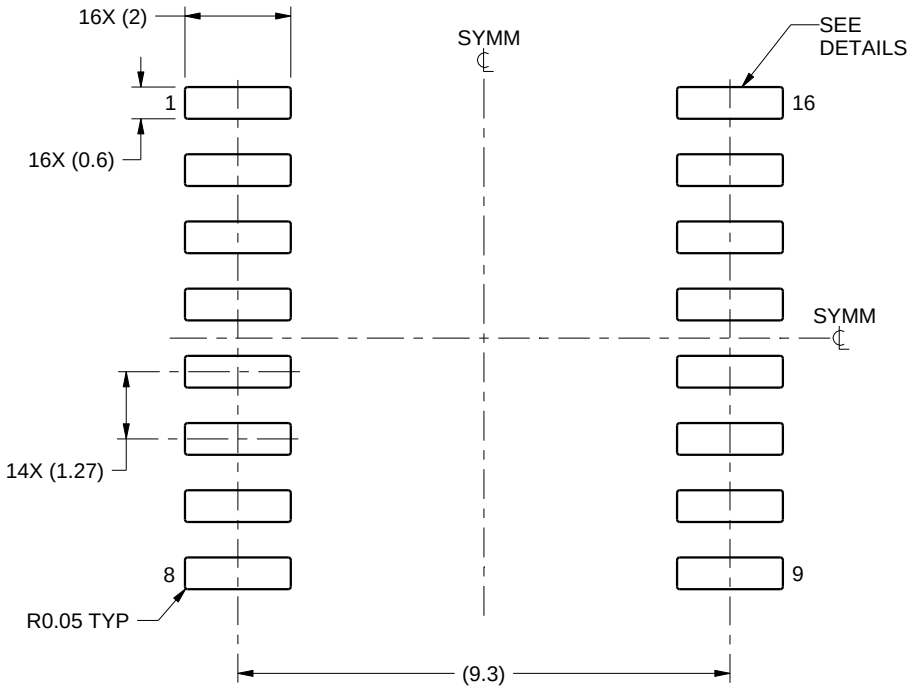

LAND PATTERN EXAMPLE
SCALE:7X

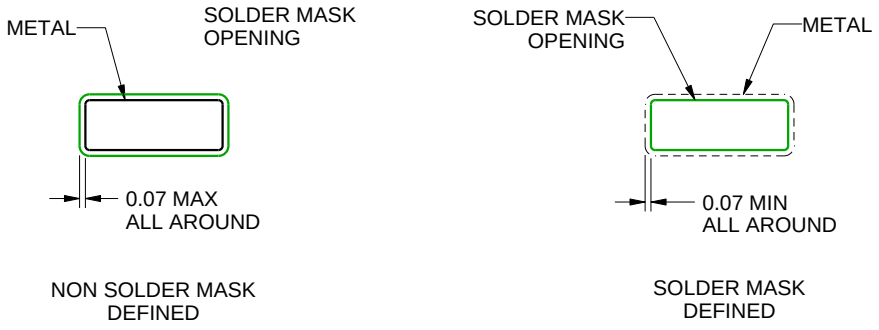

SOLDER MASK DETAILS

4220721/A 07/2016

NOTES: (continued)

6. Publication IPC-7351 may have alternate designs.
7. Solder mask tolerances between and around signal pads can vary based on board fabrication site.

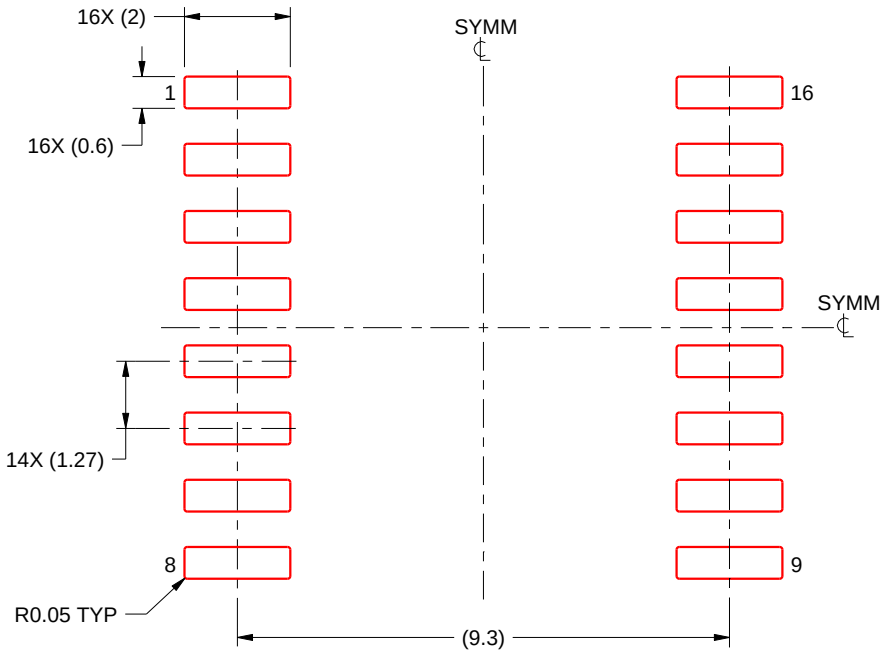

SOLDER PASTE EXAMPLE
BASED ON 0.125 mm THICK STENCIL
SCALE:7X

4220721/A 07/2016

NOTES: (continued)

8. Laser cutting apertures with trapezoidal walls and rounded corners may offer better paste release. IPC-7525 may have alternate design recommendations.
9. Board assembly site may have different recommendations for stencil design.

GENERIC PACKAGE VIEW

FK 20

LCCC - 2.03 mm max height

8.89 x 8.89, 1.27 mm pitch

LEADLESS CERAMIC CHIP CARRIER

This image is a representation of the package family, actual package may vary.
Refer to the product data sheet for package details.

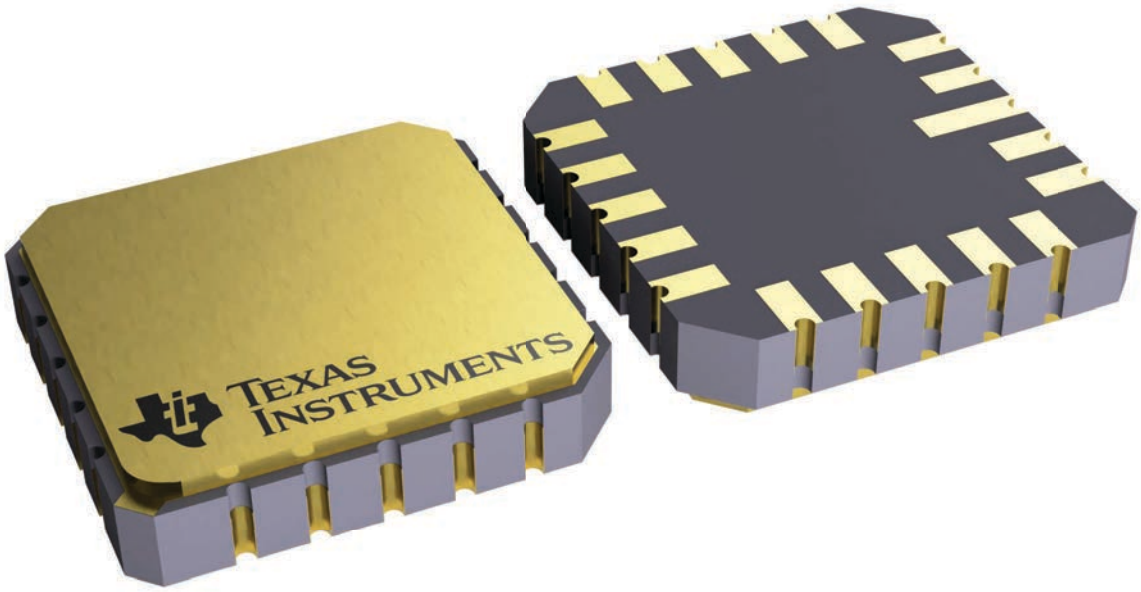

4229370VA\

J (R–GDIP–T**)

14 LEADS SHOWN

CERAMIC DUAL IN–LINE PACKAGE

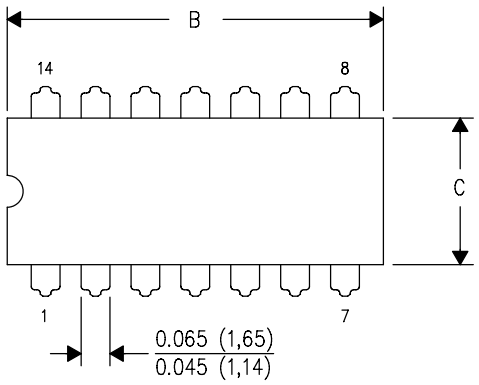

DIM \ PINS **	14	16	18	20
A	0.300 (7,62) BSC	0.300 (7,62) BSC	0.300 (7,62) BSC	0.300 (7,62) BSC
B MAX	0.785 (19,94)	.840 (21,34)	0.960 (24,38)	1.060 (26,92)
B MIN	—	—	—	—
C MAX	0.300 (7,62)	0.300 (7,62)	0.310 (7,87)	0.300 (7,62)
C MIN	0.245 (6,22)	0.245 (6,22)	0.220 (5,59)	0.245 (6,22)

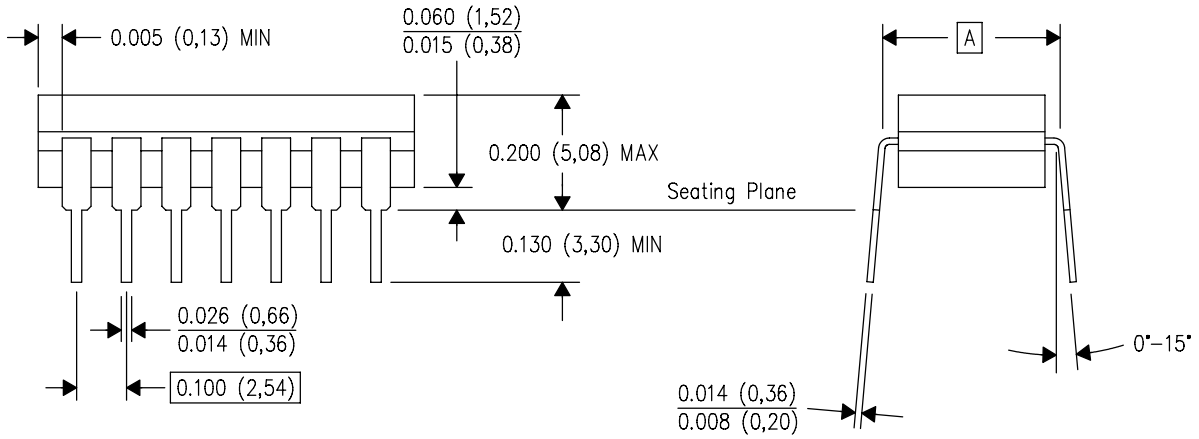

4040083/F 03/03

NOTES:
A. All linear dimensions are in inches (millimeters).
B. This drawing is subject to change without notice.
C. This package is hermetically sealed with a ceramic lid using glass frit.
D. Index point is provided on cap for terminal identification only on press ceramic glass frit seal only.
E. Falls within MIL STD 1835 GDIP1–T14, GDIP1–T16, GDIP1–T18 and GDIP1–T20.

N (R–PDIP–T**)

PLASTIC DUAL–IN–LINE PACKAGE

16 PINS SHOWN

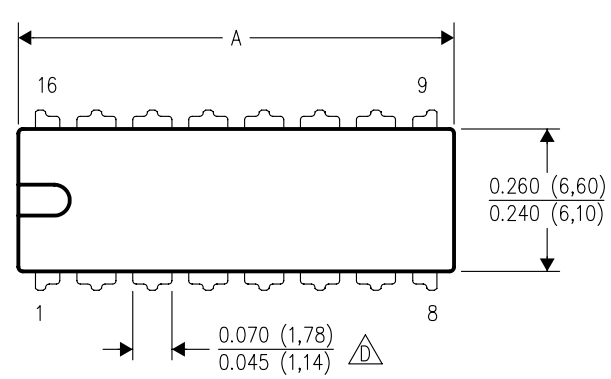

DIM \ PINS **	14	16	18	20
A MAX	0.775 (19,69)	0.775 (19,69)	0.920 (23,37)	1.060 (26,92)
A MIN	0.745 (18,92)	0.745 (18,92)	0.850 (21,59)	0.940 (23,88)
MS–001 VARIATION (C)	AA	BB	AC	AD

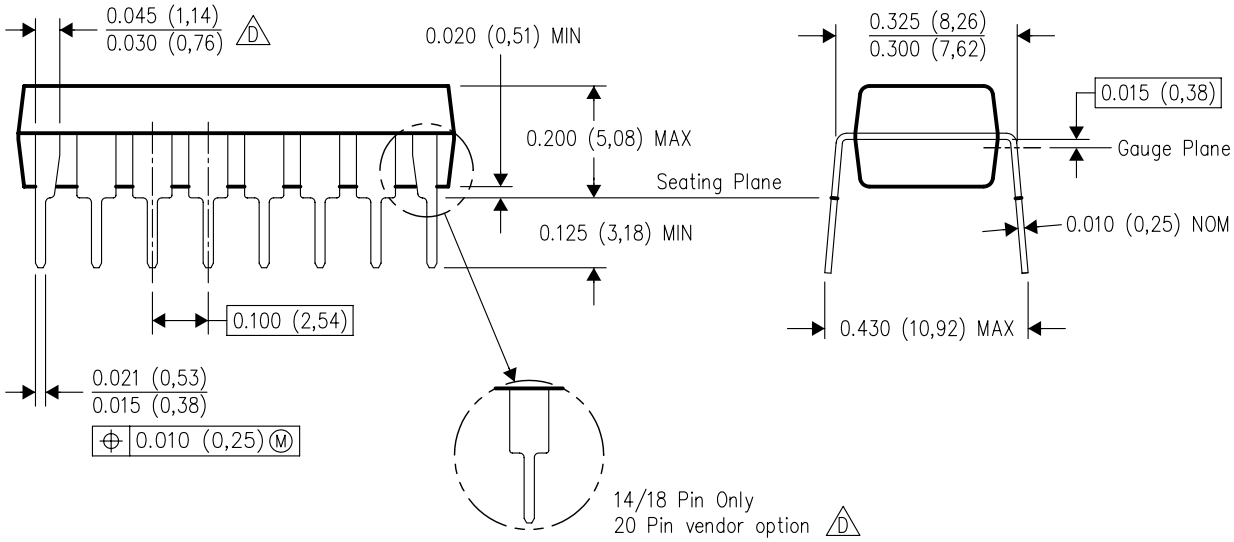

4040049/E 12/2002

NOTES:
A. All linear dimensions are in inches (millimeters).
B. This drawing is subject to change without notice.
C. Falls within JEDEC MS–001, except 18 and 20 pin minimum body length (Dim A).
D. The 20 pin end lead shoulder width is a vendor option, either half or full width.

IMPORTANT NOTICE AND DISCLAIMER

TI PROVIDES TECHNICAL AND RELIABILITY DATA (INCLUDING DATASHEETS), DESIGN RESOURCES (INCLUDING REFERENCE DESIGNS), APPLICATION OR OTHER DESIGN ADVICE, WEB TOOLS, SAFETY INFORMATION, AND OTHER RESOURCES “AS IS” AND WITH ALL FAULTS, AND DISCLAIMS ALL WARRANTIES, EXPRESS AND IMPLIED, INCLUDING WITHOUT LIMITATION ANY IMPLIED WARRANTIES OF MERCHANTABILITY, FITNESS FOR A PARTICULAR PURPOSE OR NON-INFRINGEMENT OF THIRD PARTY INTELLECTUAL PROPERTY RIGHTS.

These resources are intended for skilled developers designing with TI products. You are solely responsible for (1) selecting the appropriate TI products for your application, (2) designing, validating and testing your application, and (3) ensuring your application meets applicable standards, and any other safety, security, regulatory or other requirements.

These resources are subject to change without notice. TI grants you permission to use these resources only for development of an application that uses the TI products described in the resource. Other reproduction and display of these resources is prohibited. No license is granted to any other TI intellectual property right or to any third party intellectual property right. TI disclaims responsibility for, and you fully indemnify TI and its representatives against any claims, damages, costs, losses, and liabilities arising out of your use of these resources.

TI’s products are provided subject to TI’s Terms of Sale, TI’s General Quality Guidelines, or other applicable terms available either on ti.com or provided in conjunction with such TI products. TI’s provision of these resources does not expand or otherwise alter TI’s applicable warranties or warranty disclaimers for TI products. Unless TI explicitly designates a product as custom or customer-specified, TI products are standard, catalog, general purpose devices.

TI objects to and rejects any additional or different terms you may propose.

Copyright © 2026, Texas Instruments Incorporated

Last updated 10/2025