UCC21225A 4A, 6A, 2.5kV$_{RMS}$ Isolated Dual-Channel Gate Driver in LGA

1 Features

- Universal: dual low-side, dual high-side or half-bridge driver
- 5 × 5mm, space-saving LGA-13 package
- Switching parameters:
  - Typical propagation delay: 19ns
  - Maximum delay matching: 5ns
  - Maximum pulse-width distortion: 6ns
- CMTI greater than 100V/ns
- 4A peak source, 6A peak sink output
- TTL and CMOS compatible inputs
- Input VCCI range: 3V to 18V
- Up to 25V VDD with 5V UVLO
- Programmable overlap and dead time
- Rejects input transients shorter than 5ns
- Fast disable for power sequencing
- Safety-related certifications:
  - 3535V$_{PK}$ isolation per DIN V VDE V 0884-11:2017-01
  - 2500V$_{RMS}$ isolation for 1 minute per UL 1577
  - CQC per GB 4943.1-2022

2 Applications

- Server, telecom, IT, and industrial infrastructures
- DC-DC and AC-to-DC power supplies
- Motor drive and DC-to-AC solar inverters
- HEV and BEV battery chargers

3 Description

The UCC21225A is an isolated dual-channel gate driver with 4A source and 6A sink peak current in a 5mm × 5mm LGA-13 package. UCC21225A is designed to drive power transistors up to 5MHz with best-in-class propagation delay and pulse-width distortion.

The input side is isolated from the two output drivers by a 2.5kV$_{RMS}$ isolation barrier, with 100V/ns minimum common-mode transient immunity (CMTI). Internal functional isolation between the two secondary side drivers allows working voltage up to 700V$_{DC}$.

Configure this driver as two low-side, two high-side, or a half-bridge driver with programmable dead time (DT). A disable pin shuts down both outputs simultaneously when it is set high, and allows normal operation when left open or grounded.

The device accepts VDD supply voltages up to 25V. A wide input VCCI range from 3V to 18V makes the driver an excellent choice for interfacing with both analog and digital controllers. All the supply voltage pins have undervoltage lock-out (UVLO) protection.

With all these advanced features, the UCC21225A enables high power density, high efficiency, and robustness in a wide variety of power applications.

Package Information

PART NUMBER	PACKAGE(1)	PACKAGE SIZE(2)
UCC21225ANPL	NPL (LGA, 13)	5mm × 5mm

(1) For all available packages, see the orderable addendum at the end of the datasheet.
(2) The package size (length × width) is a nominal value and includes pins, where applicable.

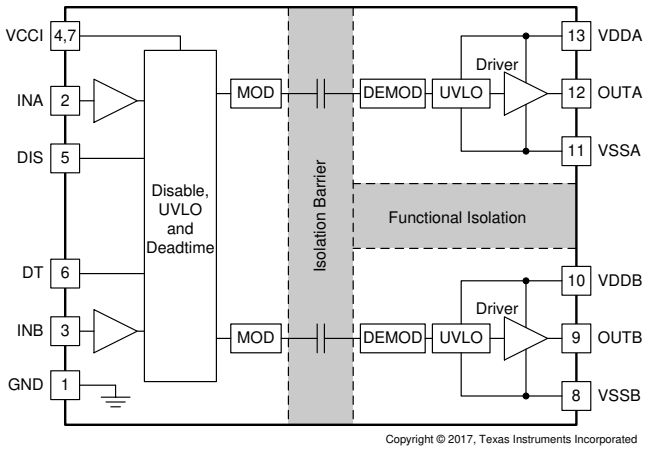

Copyright © 2017, Texas Instruments Incorporated

Functional Block Diagram

An IMPORTANT NOTICE at the end of this data sheet addresses availability, warranty, changes, use in safety-critical applications, intellectual property matters and other important disclaimers. PRODUCTION DATA.

Table of Contents

1 Features....1
2 Applications....1
3 Description....1
4 Pin Configuration and Functions....3
5 Specifications....4
5.1 Absolute Maximum Ratings....4
5.2 ESD Ratings....4
5.3 Recommended Operating Conditions....4
5.4 Thermal Information....4
5.5 Power Ratings....5
5.6 Insulation Specifications....5
5.7 Safety-Related Certifications....6
5.8 Safety-Limiting Values....6
5.9 Electrical Characteristics....7
5.10 Switching Characteristics....8
5.11 Insulation Characteristics and Thermal Derating Curves....9
5.12 Typical Characteristics....10
6 Parameter Measurement Information....14
6.1 Propagation Delay and Pulse Width Distortion....14
6.2 Rising and Falling Time....14
6.3 Input and Disable Response Time....14
6.4 Programable Dead Time....15
6.5 Power-up UVLO Delay to OUTPUT....15
6.6 CMTI Testing....17
7 Detailed Description....18
7.1 Overview....18
7.2 Functional Block Diagram....18
7.3 Feature Description....18
7.4 Device Functional Modes....21
8 Application and Implementation....24
8.1 Application Information....24
8.2 Typical Application....24
8.3 Power Supply Recommendations....33
8.4 Layout....33
9 Device and Documentation Support....37
9.1 Device Support....37
9.2 Documentation Support....37
9.3 Receiving Notification of Documentation Updates....37
9.4 Certifications....37
9.5 Support Resources....37
9.6 Trademarks....37
9.7 Electrostatic Discharge Caution....37
9.8 Glossary....37
10 Revision History....38
11 Mechanical, Packaging, and Orderable Information....38

Copyright © 2026 Texas Instruments Incorporated

4 Pin Configuration and Functions

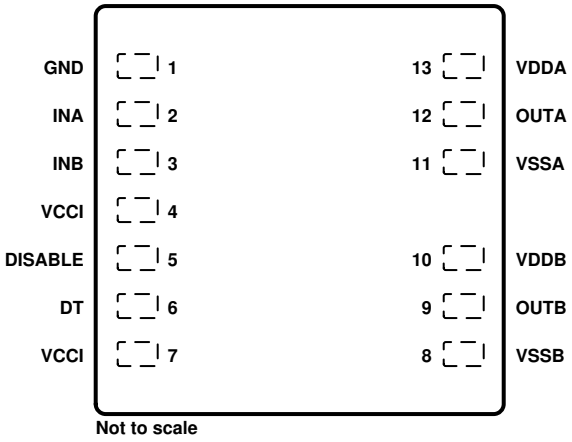

Figure 4-1. NPL Package13-pin LGATop View

Table 4-1. Pin Functions

PIN		TYPE[1]	DESCRIPTION
NAME	NO.		
DISABLE	5	I	Disables both driver outputs if asserted high, enables if set low or left open. This pin is pulled low internally if left open. It is recommended to tie this pin to ground if not used to achieve better noise immunity. Bypass using a ≈1nF low ESR or ESL capacitor close to DIS pin when connecting to a microcontroller with distance.
DT	6	I	Programmable dead-time function. Tying DT to VCCI allows the outputs to overlap. Leaving DT open sets the dead time to <15ns. Placing a 500Ω to 500kΩ resistor (RDT) between DT and GND adjusts dead time according to: DT (in ns) = 10 × R_{DT} (in kΩ). It is recommended to parallel a ceramic capacitor, 2.2nF or above, close to the DT pin to achieve better noise immunity.
GND	1	G	Primary-side ground reference. All signals in the primary side are referenced to this ground.
INA	2	I	Input signal for A channel. INA input has a TTL/CMOS compatible input threshold. This pin is pulled low internally if left open. It is recommended to tie this pin to ground if not used to achieve better noise immunity.
INB	3	I	Input signal for B channel. INB input has a TTL/CMOS compatible input threshold. This pin is pulled low internally if left open. It is recommended to tie this pin to ground if not used to achieve better noise immunity.
OUTA	12	O	Output of driver A. Connect to the gate of the A channel FET or IGBT.
OUTB	9	O	Output of driver B. Connect to the gate of the B channel FET or IGBT.
VCCI	4	P	Primary-side supply voltage. Locally decoupled to GND using a low ESR or ESL capacitor located as close to the device as possible.
VCCI	7	P	Primary side supply voltage. This pin is internally shorted to PIN 4.
VDDA	13	P	Secondary-side power for driver A. Locally decoupled to VSSA using a low ESR or ESL capacitor located as close to the device as possible.
VDDB	10	P	Secondary-side power for driver B. Locally decoupled to VSSB using low ESR or ESL capacitor located as close to the device as possible.
VSSA	11	G	Ground for secondary-side driver A. Ground reference for secondary side A channel.
VSSB	8	G	Ground for secondary-side driver B. Ground reference for secondary side B channel.

(1) P = Power, G= Ground, I= Input, O= Output

Copyright © 2026 Texas Instruments Incorporated

5 Specifications

5.1 Absolute Maximum Ratings

over operating free-air temperature range (unless otherwise noted)(1)

		MIN	MAX	UNIT
Input bias pin supply voltage	VCCI to GND	–0.3	20	V
Driver bias supply	VDDA-VSSA, VDDB-VSSB	–0.3	30	V
Output signal voltage	OUTA to VSSA, OUTB to VSSB	–0.3	V_{VDDA}+0.3, V_{VDDB}+0.3	V
	OUTA to VSSA, OUTB to VSSB, Transient for 200ns	–2	V_{VDDA}+0.3, V_{VDDB}+0.3	V
Input signal voltage	INA, INB, DIS, DT to GND	–0.3	V_{VCCI}+0.3	V
	INA, INB Transient for 50ns	–5	V_{VCCI}+0.3	V
Channel to channel voltage	VSSA-VSSB, VSSB-VSSA		700	V
Junction temperature, T_J (2)		–40	150	°C
Storage temperature, T_{stg}		–65	150	°C

(1) Operation outside the *Absolute Maximum Ratings* may cause permanent device damage. *Absolute Maximum Ratings* do not imply functional operation of the device at these or any other conditions beyond those listed under *Recommended Operating Conditions*. If used outside the *Recommended Operating Conditions* but within the *Absolute Maximum Ratings*, the device may not be fully functional, and this may affect device reliability, functionality, performance, and shorten the device lifetime.
(2) To maintain the recommended operating conditions for T_J, see the Section 5.4.

5.2 ESD Ratings

			VALUE	UNIT
$V_{(ESD)}$	Electrostatic discharge	Human-body model (HBM), per ANSI/ESDA/JEDEC JS-001(1)	±4000	V
		Charged-device model (CDM), per JEDEC specification JESD22-C101(2)	±1500	

(1) JEDEC document JEP155 states that 500V HBM allows safe manufacturing with a standard ESD control process.
(2) JEDEC document JEP157 states that 250V CDM allows safe manufacturing with a standard ESD control process.

5.3 Recommended Operating Conditions

Over operating free-air temperature range (unless otherwise noted)

		MIN	MAX	UNIT
VCCI	VCCI Input supply voltage	3	18	V
VDDA, VDDB	Driver output bias supply	6.5	25	V
T_A	Ambient Temperature	–40	125	°C
T_J	Junction Temperature	–40	130	°C

5.4 Thermal Information

THERMAL METRIC(1)		UCC21225A LGA (13)(2)	UNIT
$R_{\theta JA}$	Junction-to-ambient thermal resistance	98.0	°C/W
$R_{\theta JC(top)}$	Junction-to-case (top) thermal resistance	48.8	
$R_{\theta JB}$	Junction-to-board thermal resistance	78.9	
ψ_{JT}	Junction-to-top characterization parameter	26.2	
ψ_{JB}	Junction-to-board characterization parameter	76.8	

(1) For more information about traditional and new thermal metrics, see the application note, *Semiconductor and IC Package Thermal Metrics*.

Copyright © 2026 Texas Instruments Incorporated

(2) Standard JESD51-9 Area Array SMT Test Board (2s2p) in still air, with 12mil diameter, 1oz copper vias connecting VSSA and VSSB to the plane immediately below (three vias for VSSA, three vias for VSSB).

5.5 Power Ratings

			VALUE	UNIT
P_D	Power dissipation by UCC21225A	VCCI = 18V, VDDA/B = 12V, INA/B = 3.3V, 3.5MHz 50% duty cycle square wave 1nF load	1.25	W
P_{DI}	Power dissipation by transmitter side of UCC21225A		0.05	
P_{DA}, P_{DB}	Power dissipation by each driver side of UCC21225A		0.60	

5.6 Insulation Specifications

	PARAMETER	TEST CONDITIONS	VALUE	UNIT
CLR	External clearance(1)(2)	Shortest pin-to-pin distance through air	3.5	mm
CPG	External creepage(1)	Shortest pin-to-pin distance across the package surface	3.5	mm
DTI	Distance through the insulation	Minimum internal gap (internal clearance)	>21	µm
CTI	Comparative tracking index	DIN EN 60112 (VDE 0303-11); IEC 60112	> 600	V
	Material group		I	
	Overvoltage category per IEC 60664-1	Rated mains voltage ≤ 150V_{RMS}	I-III	
		Rated mains voltage ≤ 300V_{RMS}	I-II	
DIN V VDE V 0884-11 (VDE V 0884-11): 2017-01(3)				
V_{IORM}	Maximum repetitive peak isolation voltage	AC voltage (bipolar)	792	V_{PK}
V_{IOWM}	Maximum working isolation voltage	AC voltage (sine wave); time dependent dielectric breakdown (TDDB) test; (See Figure 5-3)	560	V_{RMS}
		DC Voltage	792	V_{DC}
V_{IOTM}	Maximum transient isolation voltage	V_{TEST} = V_{IOTM}, t = 60s (qualification); V_{TEST} = 1.2 × V_{IOTM}, t = 1s (100% production)	3535	V_{PK}
V_{IOSM}	Maximum surge isolation voltage(4)	Test method per IEC 62368-1, 1.2/50 µs waveform, V_{TEST} = 1.3 × V_{IOSM} (qualification)	3500	V_{PK}
q_{pd}	Apparent charge(5)	Method a, After Input/Output safety test subgroup 2/3, V_{ini} = V_{IOTM}, t_{ini} = 60s; $V_{pd(m)}$ = 1.2 × V_{IORM}, t_m = 10s	<5	pC
		Method a, After environmental tests subgroup 1, V_{ini} = V_{IOTM}, t_{ini} = 60s; $V_{pd(m)}$ = 1.2 × V_{IORM}, t_m = 10s	<5	
		Method b1; At routine test (100% production) and preconditioning (type test) V_{ini} = 1.2 × V_{IOTM}; t_{ini} = 1s; $V_{pd(m)}$ = 1.5 × V_{IORM} , t_m = 1s	<5	
C_{IO}	Barrier capacitance, input to output(6)	V_{IO} = 0.4 sin (2πft), f = 1MHz	1.2	pF
R_{IO}	Isolation resistance, input to output	V_{IO} = 500V at T_A = 25°C	> 10^{12}	Ω
		V_{IO} = 500V at 100°C ≤ T_A ≤ 125°C	> 10^{11}	
		V_{IO} = 500V at T_S =150°C	> 10^9	
	Pollution degree		2	
	Climatic category		40/125/21	
UL 1577				

Copyright © 2026 Texas Instruments Incorporated

PARAMETER		TEST CONDITIONS	VALUE	UNIT
V_{ISO}	Withstand isolation voltage	$V_{TEST} = V_{ISO} = 3000V_{RMS}$, t = 60 sec. (qualification), $V_{TEST} = 1.2 \times V_{ISO} = 3000V_{RMS}$, t = 1 sec (100% production)	2500	V_{RMS}

(1) Creepage and clearance requirements should be applied according to the specific equipment isolation standards of an application. Care should be taken to maintain the creepage and clearance distance of a board design to ensure that the mounting pads of the isolator on the printed-circuit board do not reduce this distance. Creepage and clearance on a printed-circuit board become equal in certain cases. Techniques such as inserting grooves, ribs, or both on a printed circuit board are used to help increase these specifications.
(2) Package dimension tolerance ± 0.05mm.
(3) This coupler is designed for basic electrical insulation only within the maximum operating ratings. Verify compliance with the safety ratings by means of appropriate protective circuits.
(4) Testing is carried out in air or oil to determine the intrinsic surge immunity of the isolation barrier.
(5) Apparent charge is electrical discharge caused by a partial discharge (pd).
(6) All pins on each side of the barrier tied together creating a two-pin device.

5.7 Safety-Related Certifications

VDE	UL	CQC
Certified according to DIN V VDE V 0884-11:2017-01	Recognized under UL 1577 Component Recognition Program	Certified according to GB 4943.1-2022
Basic Insulation Maximum Transient Overvoltage, $3535V_{PK}$; Maximum Repetitive Peak Voltage, $792V_{PK}$; Maximum Surge Isolation Voltage, $2719V_{PK}$	Single protection, $2500V_{RMS}$	Basic Insulation, Altitude ≤ 5000m, Tropical Climate $320V_{RMS}$ maximum working voltage
Certification Number: 40016131	Certification Number: E181974	Certification Number: CQC18001186974

5.8 Safety-Limiting Values

Safety limiting intends to minimize potential damage to the isolation barrier upon failure of input or output circuitry.

PARAMETER		TEST CONDITIONS	SIDE	MIN	TYP	MAX	UNIT
I_S	Safety output supply current(1)	$R_{\theta JA}$ = 98.0°C/W, VDDA/B = 12V, T_A = 25°C, T_J = 150°C See Figure 5-1	DRIVER A, DRIVER B			50	mA
		$R_{\theta JA}$ = 98.0°C/W, VDDA/B = 25V, T_A = 25°C, T_J = 150°C	DRIVER A, DRIVER B			24	mA
P_S	Safety supply power(1)	$R_{\theta JA}$ = 98.0°C/W, T_A = 25°C, T_J = 150°C See Figure 5-2	INPUT			0.05	W
			DRIVER A			0.60	
			DRIVER B			0.60	
			TOTAL			1.25	
T_S	Safety temperature(1)					150	°C

(1) The maximum safety temperature, T_S, has the same value as the maximum junction temperature, T_J, specified for the device. The I_S and P_S parameters represent the safety current and safety power respectively. Do not exceed the maximum limits of I_S and P_S. These limits vary with the ambient temperature, T_A.

The junction-to-air thermal resistance, $R_{\theta JA}$, in the *Section 5.4* table is that of a device installed on a high-K test board for leaded surface-mount packages. Use these equations to calculate the value for each parameter:

$T_J = T_A + R_{\theta JA} \times P$, where P is the power dissipated in the device.

$T_{J(max)} = T_S = T_A + R_{\theta JA} \times P_S$, where $T_{J(max)}$ is the maximum allowed junction temperature.

$P_S = I_S \times V_I$, where V_I is the maximum input voltage.

Copyright © 2026 Texas Instruments Incorporated

5.9 Electrical Characteristics

V_{VCCI} = 3.3V or 5V, 0.1µF capacitor from VCCI to GND, V_{VDDA} = V_{VDDB} = 12V, 1µF capacitor from VDDA and VDDB to VSSA and VSSB, T_A = –40°C to +125°C, (unless otherwise noted)

PARAMETER		TEST CONDITIONS	MIN	TYP	MAX	UNIT
SUPPLY CURRENTS						
I_{VCCI}	VCCI quiescent current	V_{INA} = 0V, V_{INB} = 0V		1.5	2.0	mA
I_{VDDA}, I_{VDDB}	VDDA and VDDB quiescent current	V_{INA} = 0V, V_{INB} = 0V		1.0	1.8	mA
I_{VCCI}	VCCI operating current	(f = 500kHz) current per channel, C_{OUT} = 100pF		2.0		mA
I_{VDDA}, I_{VDDB}	VDDA and VDDB operating current	(f = 500kHz) current per channel, C_{OUT} = 100pF		2.5		mA
VCCI SUPPLY UNDERVOLTAGE LOCKOUT THRESHOLDS						
V_{VCCI_ON}	Rising threshold VCCI_ON		2.55	2.7	2.85	V
V_{VCCI_OFF}	Falling threshold VCCI_OFF		2.35	2.5	2.65	V
V_{VCCI_HYS}	Threshold hysteresis			0.2		V
VDD SUPPLY UNDERVOLTAGE LOCKOUT THRESHOLDS						
V_{VDDA_ON}, V_{VDDB_ON}	Rising threshold VDDA_ON, VDDB_ON		5.7	6.0	6.3	V
V_{VDDA_OFF}, V_{VDDB_OFF}	Falling threshold VDDA_OFF, VDDB_OFF		5.4	5.7	6	V
V_{VDDA_HYS}, V_{VDDB_HYS}	Threshold hysteresis			0.3		V
INA, INB AND DISABLE						
V_{INAH}, V_{INBH}, V_{DISH}	Input high voltage		1.6	1.8	2	V
V_{INAL}, V_{INBL}, V_{DISL}	Input low voltage		0.8	1	1.2	V
V_{INA_HYS}, V_{INB_HYS}, V_{DIS_HYS}	Input hysteresis			0.8		V
V_{INA}, V_{INB}	Negative transient, ref to GND, 50ns pulse	Not production tested, bench test only	–5			V
OUTPUT						
I_{OA+}, I_{OB+}	Peak output source current	C_{VDD} = 10 µF, C_{LOAD} = 0.18 µF, f = 1kHz, bench measurement		4		A
I_{OA-}, I_{OB-}	Peak output sink current	C_{VDD} = 10 µF, C_{LOAD} = 0.18 µF, f = 1kHz, bench measurement		6		A
R_{OHA}, R_{OHB}	Output resistance at high state	I_{OUT} = –10mA, T_A = 25°C, R_{OHA}, R_{OHB}do not represent drive pull-up performance. See t_{RISE} in Section 5.10 and Section 7.3.4 for details.		5		Ω
R_{OLA}, R_{OLB}	Output resistance at low state	I_{OUT} = 10mA, T_A = 25°C		0.55		Ω
V_{OHA}, V_{OHB}	Output voltage at high state	V_{VDDA}, V_{VDDB} = 12V, I_{OUT} = –10mA, T_A = 25°C		11.95		V
V_{OLA}, V_{OLB}	Output voltage at low state	V_{VDDA}, V_{VDDB} = 12V, I_{OUT} = 10mA, T_A = 25°C		5.5		mV
DEADTIME AND OVERLAP PROGRAMMING						

Copyright © 2026 Texas Instruments Incorporated

V_{VCCI} = 3.3V or 5V, 0.1µF capacitor from VCCI to GND, V_{VDDA} = V_{VDDB} = 12V, 1µF capacitor from VDDA and VDDB to VSSA and VSSB, T_A = –40°C to +125°C, (unless otherwise noted)

PARAMETER	TEST CONDITIONS	MIN	TYP	MAX	UNIT
Dead time	Pull DT pin to VCCI	Overlap determined by INA INB			-
	DT pin is left open, min spec characterized only, tested for outliers	0	8	15	ns
	R_{DT} = 20kΩ	160	200	240	ns

5.10 Switching Characteristics

V_{VCCI} = 3.3V or 5V, 0.1-µF capacitor from VCCI to GND, V_{VDDA} = V_{VDDB} = 12V, 1-µF capacitor from VDDA and VDDB to VSSA and VSSB, T_A = –40°C to +125°C, (unless otherwise noted).

PARAMETER		TEST CONDITIONS	MIN	TYP	MAX	UNIT
t_{RISE}	Output rise time, 20% to 80% measured points	C_{OUT} = 1.8nF		6	16	ns
t_{FALL}	Output fall time, 90% to 10% measured points	C_{OUT} = 1.8nF		7	12	ns
t_{PWmin}	Minimum pulse width	Output off for less than minimum, C_{OUT} = 0pF			20	ns
t_{PDHL}	Propagation delay from INx to OUTx falling edges		14	19	30	ns
t_{PDLH}	Propagation delay from INx to OUTx rising edges		14	19	30	ns
t_{PWD}	Pulse width distortion $\lvert t_{PDLH} - t_{PDHL} \rvert$				6	ns
t_{DM}	Propagation delays matching between VOUTA, VOUTB				5	ns
$\lvert CM_H \rvert$	High-level common-mode transient immunity	INA and INB both are tied to VCCI; V_{CM}=1200V; (See Section 6.6)	100			V/ns
$\lvert CM_L \rvert$	Low-level common-mode transient immunity	INA and INB both are tied to GND; V_{CM}=1200V; (See Section 6.6)	100			

Copyright © 2026 Texas Instruments Incorporated

5.11 Insulation Characteristics and Thermal Derating Curves

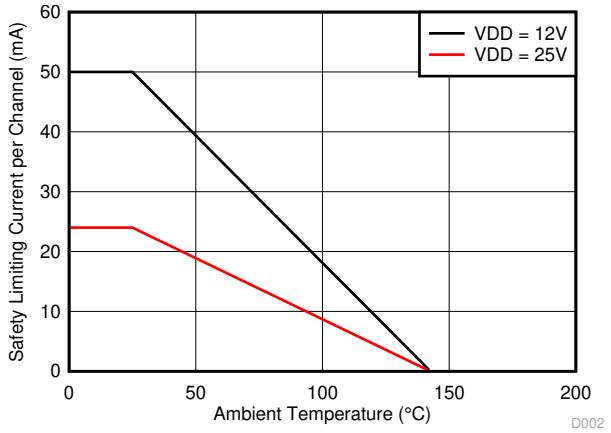

Figure 5-1. Thermal Derating Curve for Safety-Related Limiting Current (Current in Each Channel with Both Channels Running Simultaneously)

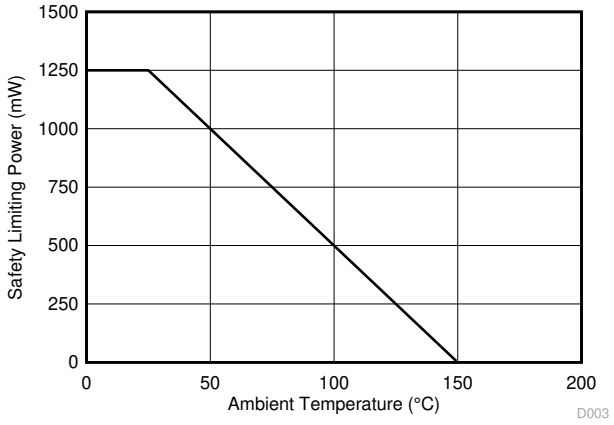

Figure 5-2. Thermal Derating Curve for Safety-Related Limiting Power

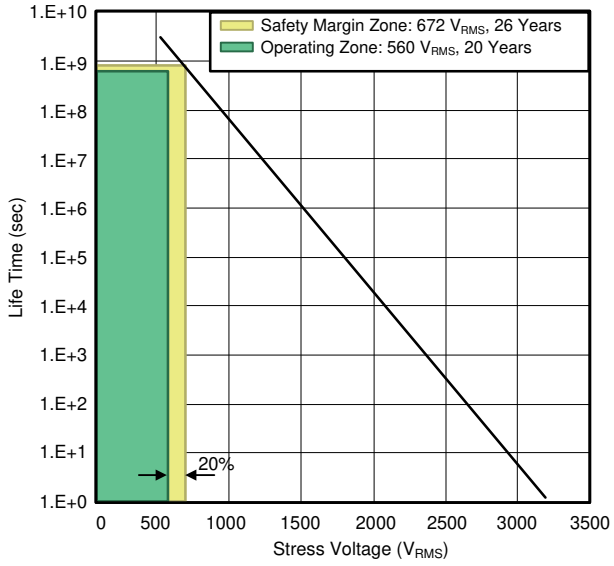

Figure 5-3. Isolation Capacitor Life Time Projection

Copyright © 2026 Texas Instruments Incorporated

5.12 Typical Characteristics

VDDA = VDDB = 12V, VCCI = 3.3V, T_A = 25°C, No load unless otherwise noted.

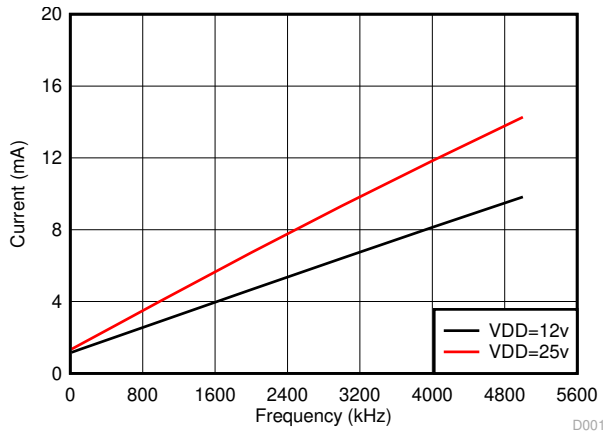

Figure 5-4. Per Channel Current Consumption vs. Frequency (No Load, VDD = 12V or 25V)

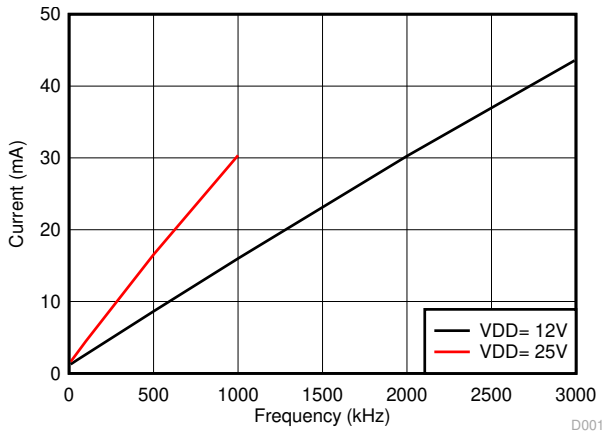

Figure 5-5. Per Channel Current Consumption ($I_{VDDA/B}$) vs. Frequency (1nF Load, VDD = 12V or 25V)

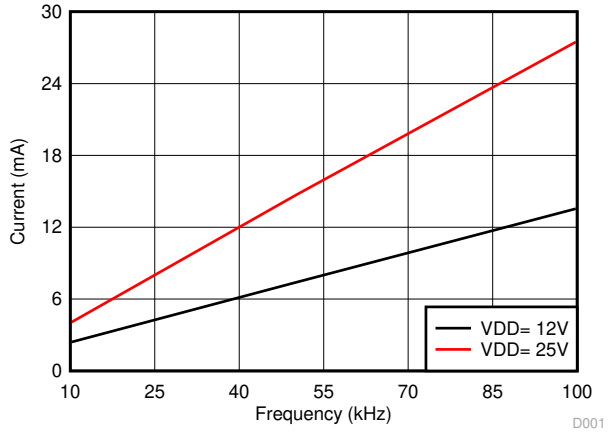

Figure 5-6. Per Channel Current Consumption ($I_{VDDA/B}$) vs. Frequency (10nF Load, VDD = 12V or 25V)

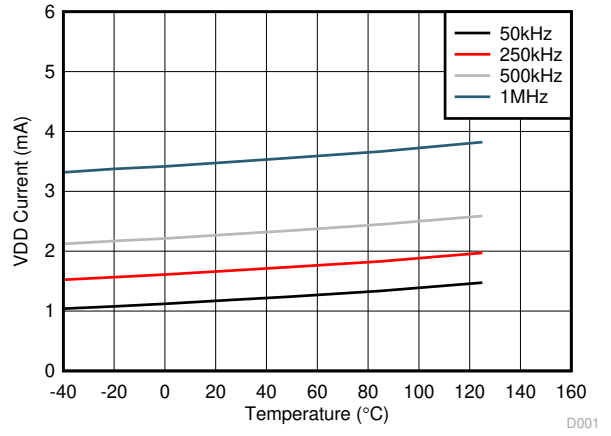

Figure 5-7. Per Channel ($I_{VDDA/B}$) Supply Current Vs. Temperature (No Load, Different Switching Frequencies)

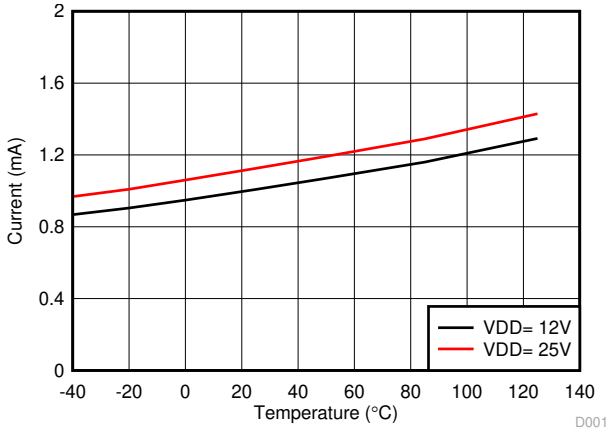

Figure 5-8. Per Channel ($I_{VDDA/B}$) Quiescent Supply Current vs Temperature (No Load, Input Low, No Switching)

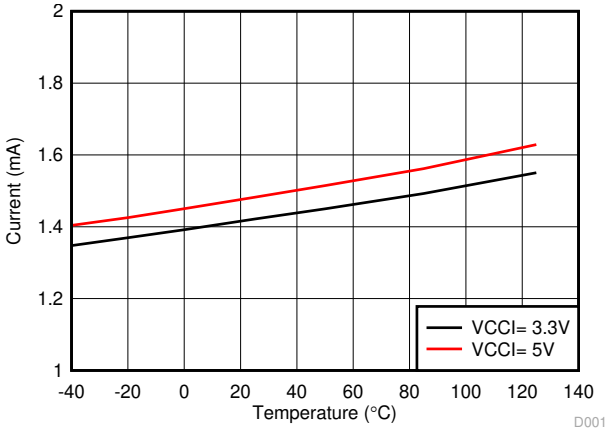

Figure 5-9. I_{VCCI} Quiescent Supply Current vs Temperature (No Load, Input Low, No Switching)

Copyright © 2026 Texas Instruments Incorporated

5.12 Typical Characteristics (continued)

VDDA = VDDB = 12V, VCCI = 3.3V, T_A = 25°C, No load unless otherwise noted.

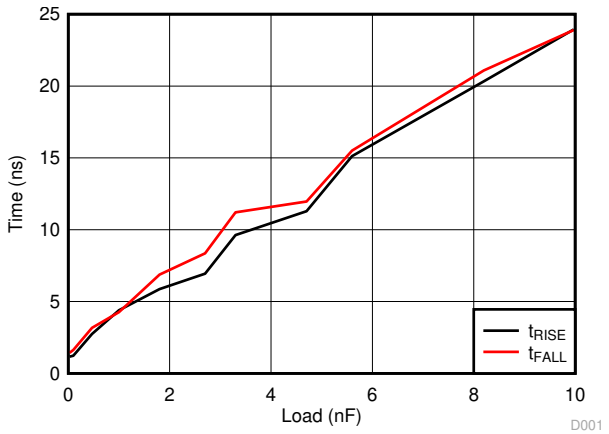

Figure 5-10. Rising and Falling Times vs. Load (VDD = 12V)

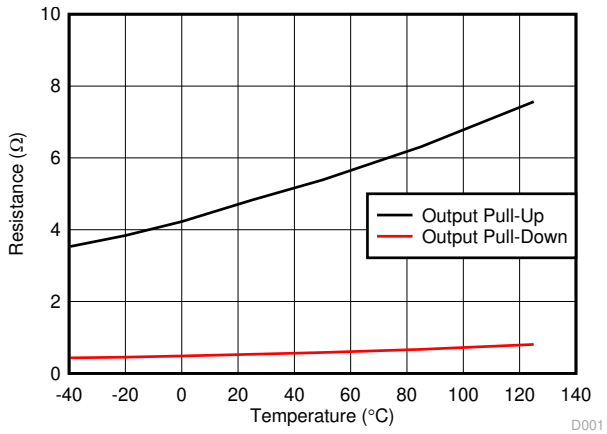

Figure 5-11. Output Resistance vs. Temperature

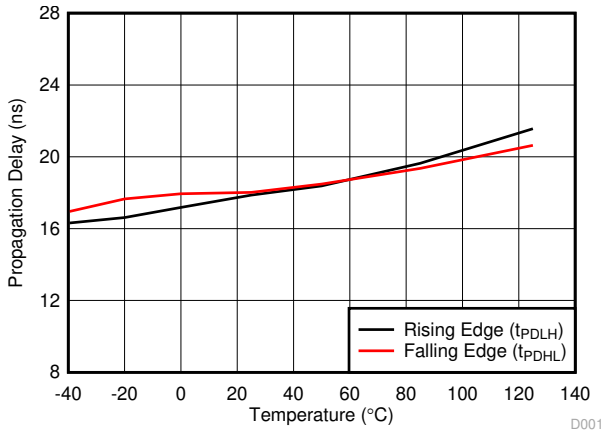

Figure 5-12. Propagation Delay vs. Temperature

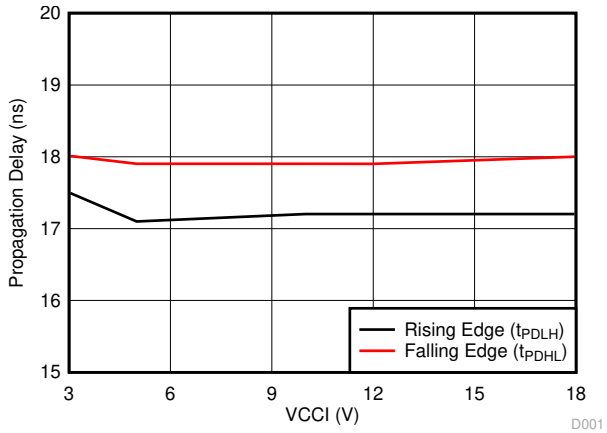

Figure 5-13. Propagation Delay vs. VCCI

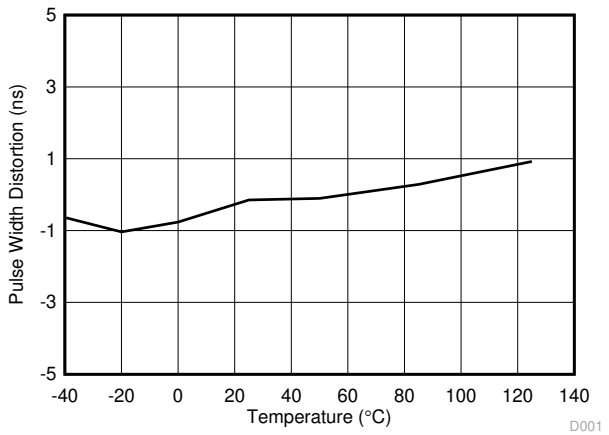

Figure 5-14. Pulse Width Distortion vs. Temperature

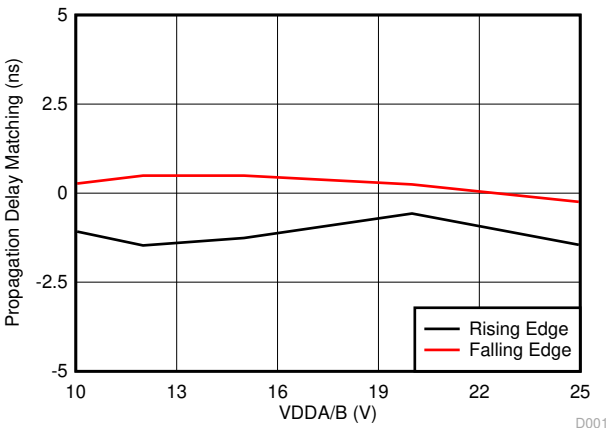

Figure 5-15. Propagation Delay Matching (t_{DM}) vs. VDD

5.12 Typical Characteristics (continued)

VDDA = VDDB = 12V, VCCI = 3.3V, T_A = 25°C, No load unless otherwise noted.

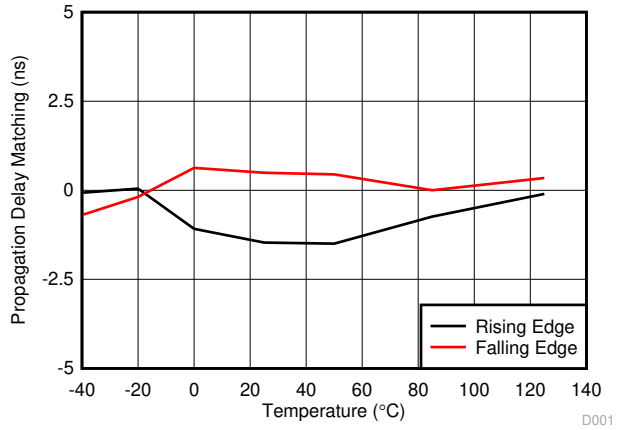

Figure 5-16. Propagation Delay Matching (t_{DM}) vs. Temperature

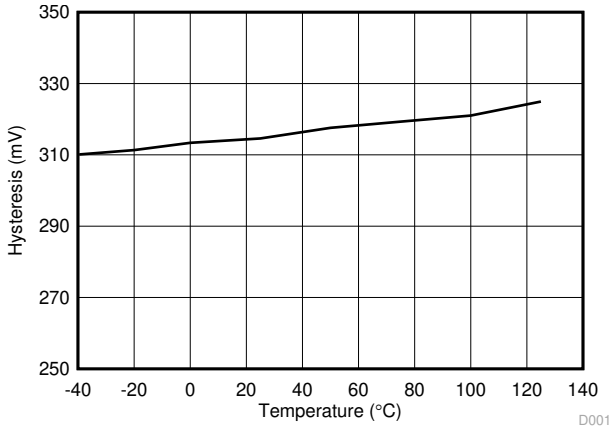

Figure 5-17. VDD UVLO Hysteresis vs. Temperature

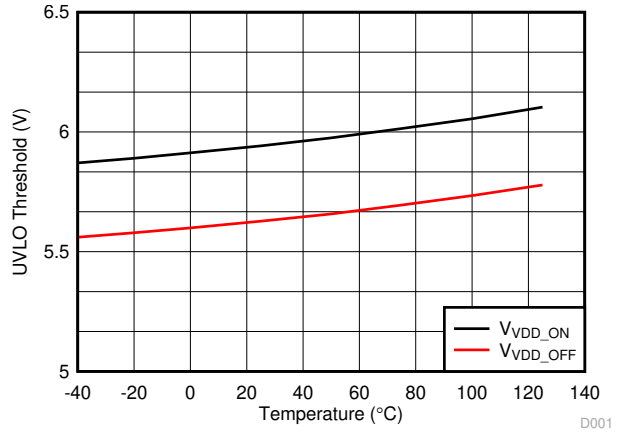

Figure 5-18. VDD UVLO Threshold vs. Temperature

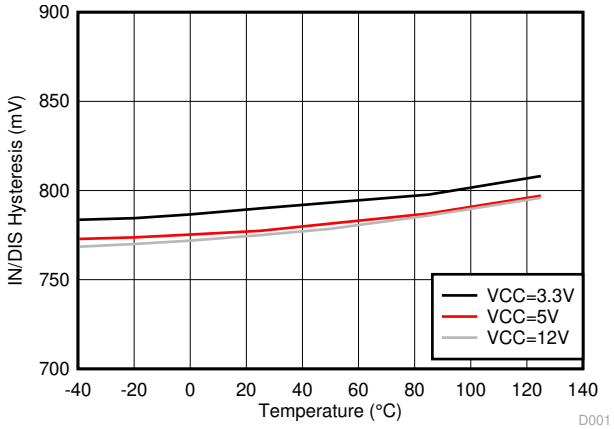

Figure 5-19. IN/DIS Hysteresis vs. Temperature

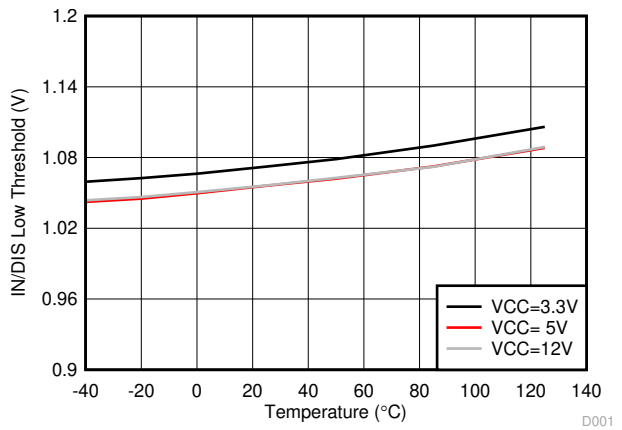

Figure 5-20. IN/DIS Low Threshold

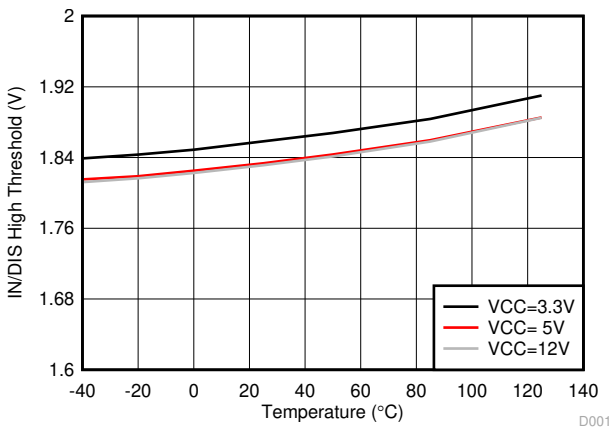

Figure 5-21. IN/DIS High Threshold

Copyright © 2026 Texas Instruments Incorporated

5.12 Typical Characteristics (continued)

VDDA = VDDB = 12V, VCCI = 3.3V, T_A = 25°C, No load unless otherwise noted.

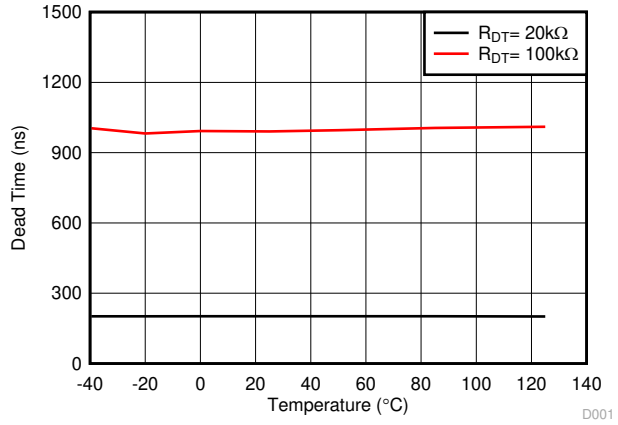

Figure 5-22. Dead Time vs. Temperature (with R_{DT} = 20kΩ and 100kΩ)

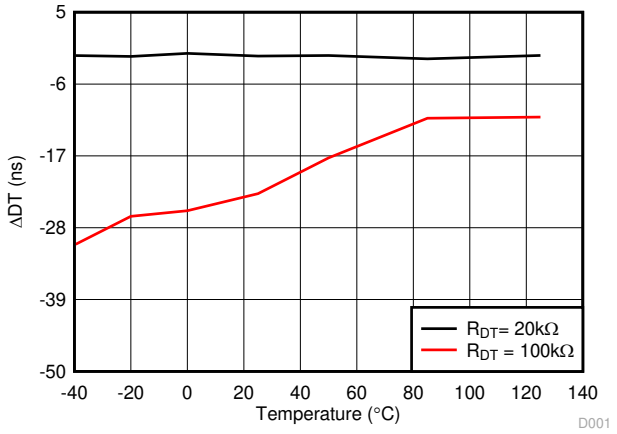

Figure 5-23. Dead Time Matching vs. Temperature (with R_{DT} = 20kΩ and 100kΩ)

Copyright © 2026 Texas Instruments Incorporated

6 Parameter Measurement Information

6.1 Propagation Delay and Pulse Width Distortion

Figure 6-1 shows how to calculate pulse width distortion (t_{PWD}) and delay matching (t_{DM}) from the propagation delays of channels A and B. Measure these parameters by confirming that both inputs are in phase and disabling the dead-time function by shorting the DT Pin to VCC.

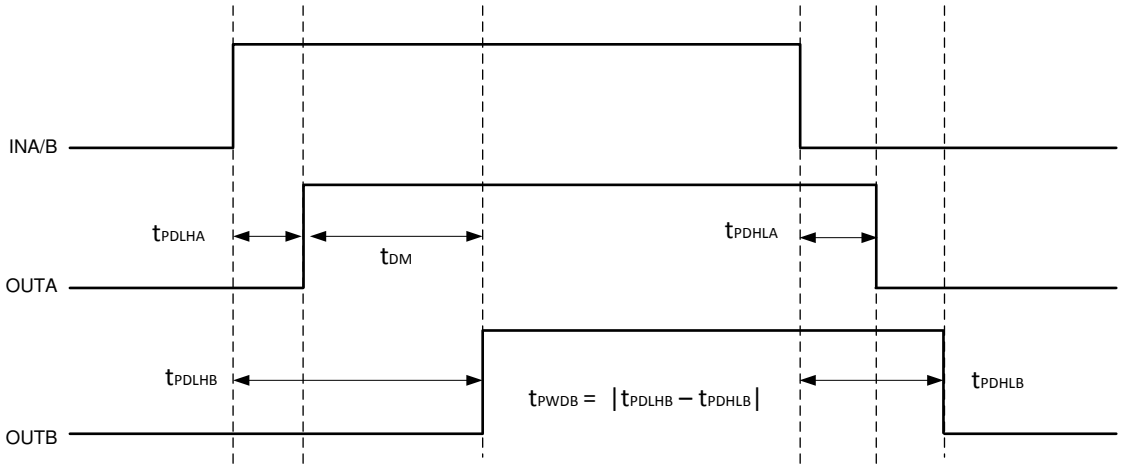

Figure 6-1. Overlapping Inputs, Dead Time Disabled

6.2 Rising and Falling Time

Figure 6-2 shows the criteria for measuring rising (t_{RISE}) and falling (t_{FALL}) times. For more information on how short rising and falling times are achieved see Section 7.3.4.

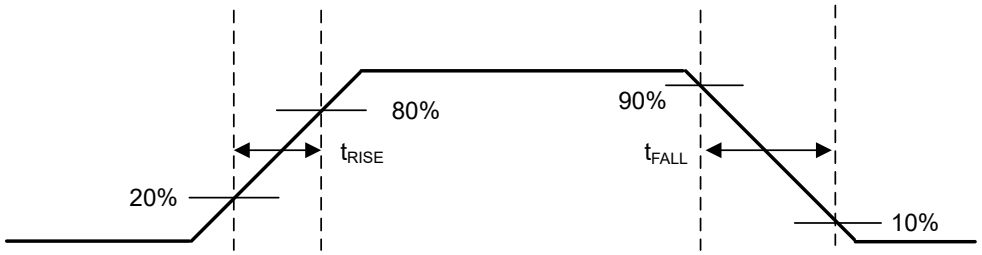

Figure 6-2. Rising and Falling Time Criteria

6.3 Input and Disable Response Time

Figure 6-3 shows the response time of the disable function. For more information, see Section 7.4.1.

Copyright © 2026 Texas Instruments Incorporated

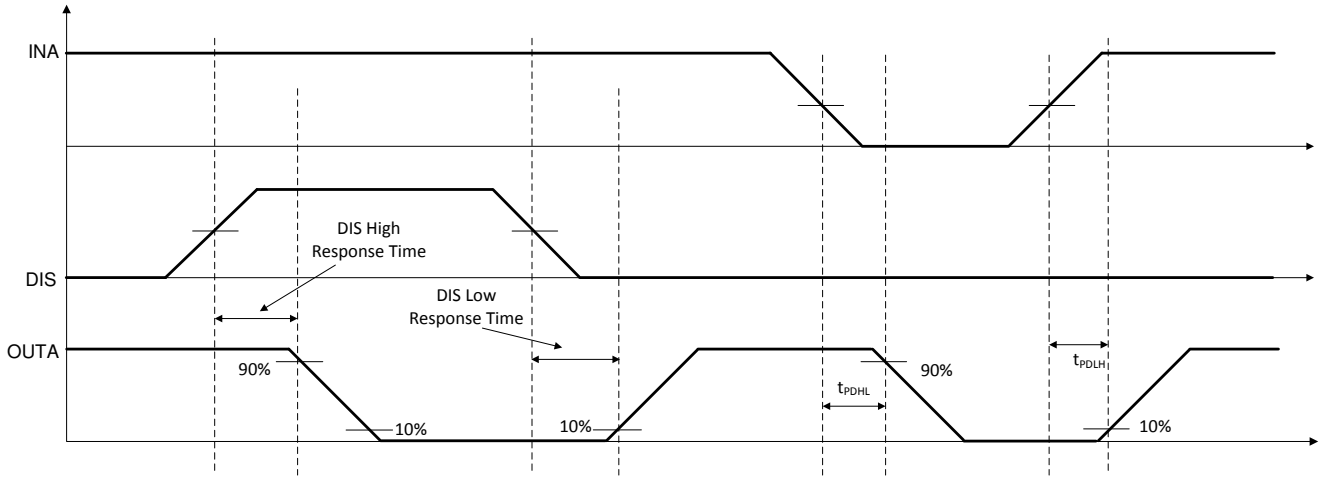

Figure 6-3. Disable Pin Timing

6.4 Programable Dead Time

Leaving the DT pin open or tying it to GND through an appropriate resistor (R_{DT}) sets a dead-time interval. For more details on dead time, refer to Section 7.4.2.

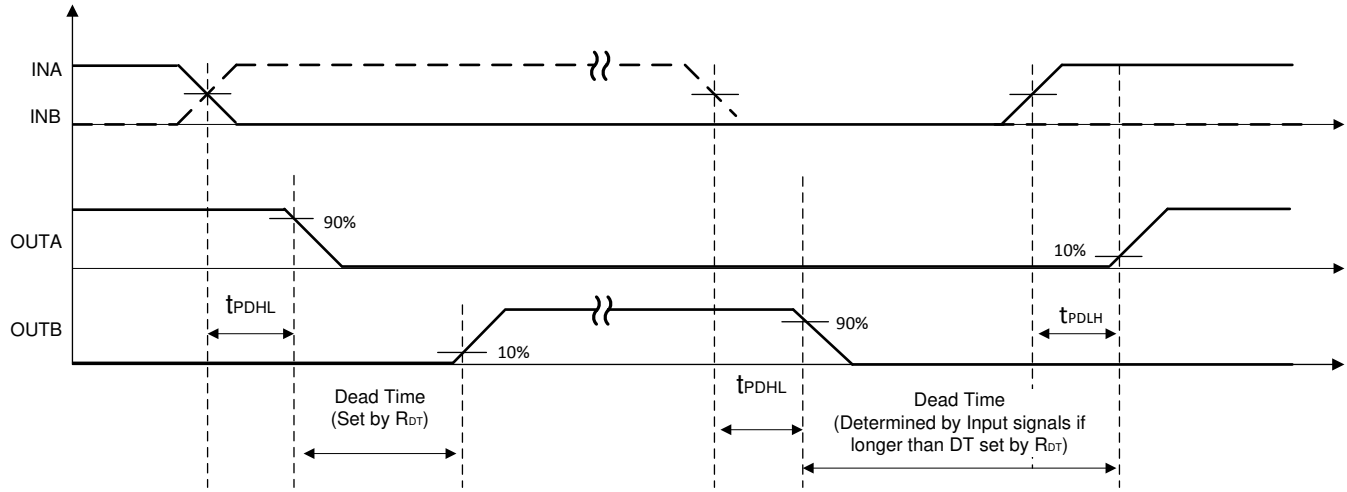

Figure 6-4. Dead-Time Switching Parameters

6.5 Power-up UVLO Delay to OUTPUT

Before the driver is ready to deliver a proper output state, there is a power up delay from the UVLO rising edge to output and it is defined as $t_{VCCI+\ to\ OUT}$ for VCCI UVLO (typically 40µs) and $t_{VDD+\ to\ OUT}$ for VDD UVLO (typically 50µs). It is recommended to consider proper margin before launching PWM signal after the VCCI and VDD bias supply of the driver is ready. Figure 6-5 and Figure 6-6 show the power-up UVLO delay timing diagram for VCCI and VDD.

If INA or INB are active before VCCI or VDD cross their respective thresholds, the output does not update until $t_{VCCI+\ to\ OUT}$ or $t_{VDD+\ to\ OUT}$ after VCCI or VDD crossing its UVLO rising threshold. However, when either VCCI or VDD receive a voltage less than their respective off thresholds, there is <1µs delay, depending on the voltage slew rate on the supply pins, before the outputs are held low. This asymmetric delay is designed to provide safe operation during VCCI or VDD brownouts.

Copyright © 2026 Texas Instruments Incorporated

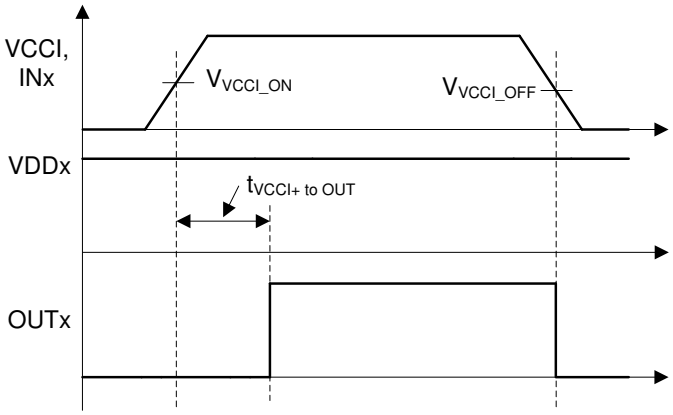

Figure 6-5. VCCI Power-up UVLO Delay

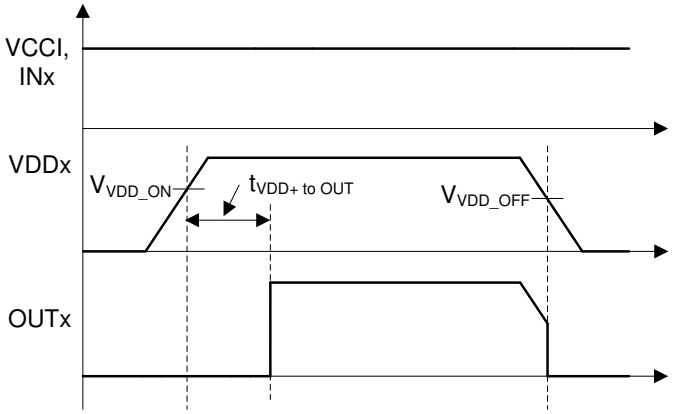

Figure 6-6. VDDA/B Power-up UVLO Delay

Copyright © 2026 Texas Instruments Incorporated

6.6 CMTI Testing

Figure 6-7 is a simplified diagram of the CMTI testing configuration.

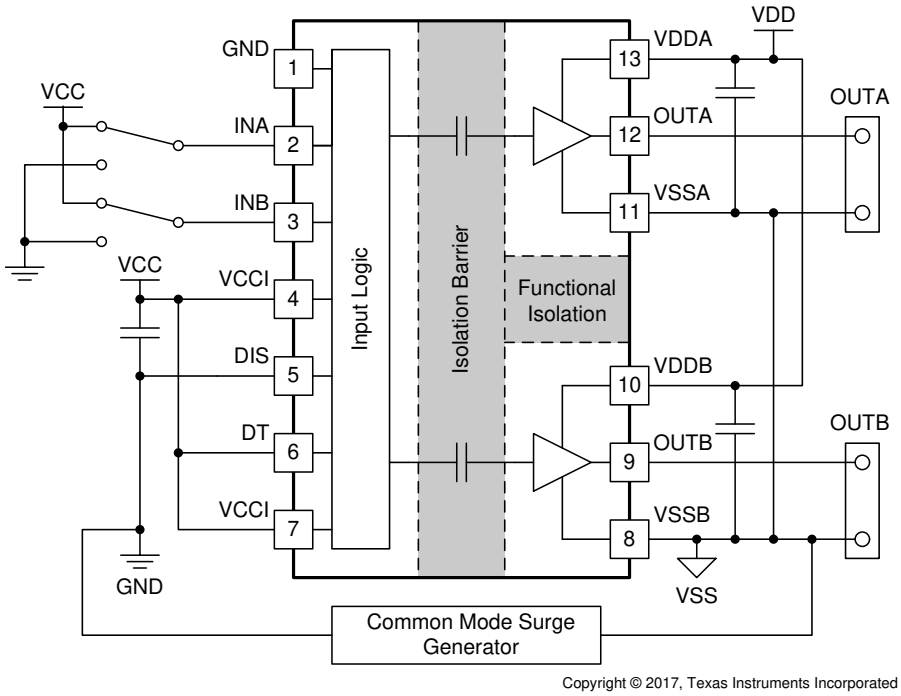

Figure 6-7. Simplified CMTI Testing Setup

7 Detailed Description

7.1 Overview

There are several instances where controllers cannot deliver sufficient current to drive the gates of power transistors. This is especially the case with digital controllers, since the input signal from the digital controller is often a 3.3V logic signal that can delivering only a few mA. To switch power transistors rapidly and reduce switching power losses, high-current gate drivers are often placed between the output of control devices and the gates of power transistors.

The UCC21225A is a flexible dual gate driver. Configure the UCC21225Ato fit a variety of power supply and motor drive topologies, as well as drive several types of transistors, including SiC MOSFETs. UCC21225A has many features that allow it to integrate well with control circuitry and protect the gates it drives such as: resistor-programmable dead time (DT) control, a DISABLE pin, and undervoltage lockout (UVLO) for both input and output voltages. The UCC21225A also holds its outputs low when the inputs are left open or when the input pulse is not wide enough. The driver inputs are CMOS and TTL compatible for interfacing to digital and analog power controllers alike. Each channel is controlled by its respective input pins (INA and INB), allowing full and independent control of each of the outputs.

7.2 Functional Block Diagram

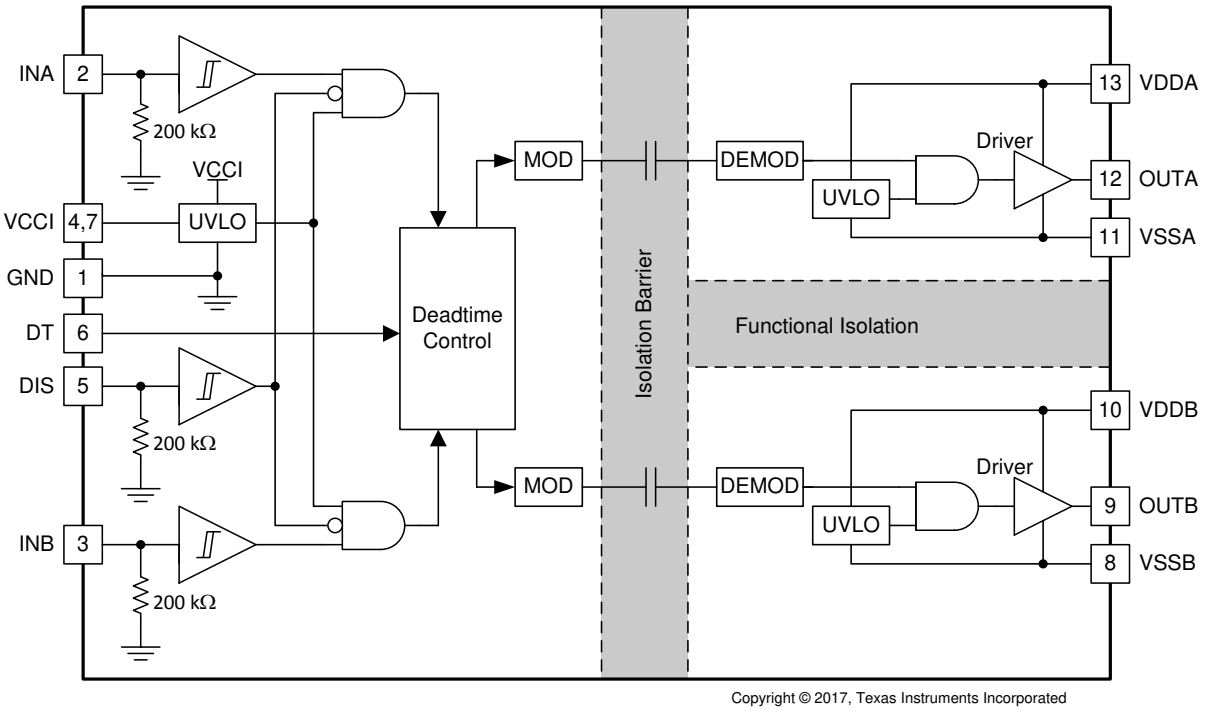

Copyright © 2017, Texas Instruments Incorporated

7.3 Feature Description

7.3.1 VDD, VCCI, and Under Voltage Lock Out (UVLO)

The UCC21225A has an internal undervoltage lockout (UVLO) protection feature on the supply circuit blocks between the VDD and VSS pins for both outputs. When the VDD bias voltage is lower than V_{VDD_ON} at device start-up or lower than V_{VDD_OFF} after start-up, the VDD UVLO feature holds the effected output low, regardless of the status of the input pins (INA and INB).

When the output stages of the driver are in an unbiased or UVLO condition, the driver outputs are held low by an active clamp circuit that limits the voltage rise on the driver outputs (Illustrated in Figure 7-1). In this condition, the upper PMOS is resistively held off by R_{Hi-Z} while the lower NMOS gate is tied to the driver output through R_{CLAMP}. In this configuration, the output is effectively clamped to the threshold voltage of the lower NMOS device, typically around 1.5V, when no bias power is available. The clamp sinking current is limited only by the per-channel safety supply power, the ambient temperature, and the 6A peak sink current rating.

Copyright © 2026 Texas Instruments Incorporated

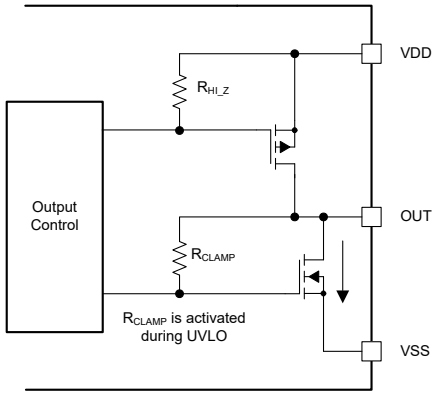

Figure 7-1. Simplified Representation of Active Pull Down Feature

The VDD UVLO protection has a hysteresis feature (V_{VDD_HYS}). This hysteresis prevents chatter when there is ground noise from the power supply. This also allows the device to accept small drops in bias voltage, which occurs when the device starts switching and operating current consumption increases suddenly.

The input side of the UCC21225A also has an internal undervoltage lockout (UVLO) protection feature. The device is not active unless the voltage at VCCI exceeds V_{VCCI_ON}. A signal cease delivery when VCCI receives a voltage less than V_{VCCI_OFF}. As with the UVLO for VDD, there is hysteresis (V_{VCCI_HYS}) to establish stable operation.

If INA or INB are active before VCCI or VDD have crossed above the respective on thresholds, the output does not update until 50µs (typical) after VCCI or VDD crossing its UVLO rising threshold. However, when either VCCI or VDD receive a voltage less than the respective off thresholds, there is <1µs delay, depending on the voltage slew rate on the supply pins, before the outputs are held low. This asymmetric delay is designed to establish safe operation during VCCI or VDD brownouts.

The UCC21225A can withstand an absolute maximum of 30V for VDD, and 20V for VCCI.

Table 7-1. UCC21225A VCCI UVLO Feature Logic

CONDITION	INPUTS		OUTPUTS	
	INA	INB	OUTA	OUTB
VCCI-GND < V_{VCCI_ON} during device start-up	H	L	L	L
VCCI-GND < V_{VCCI_ON} during device start-up	L	H	L	L
VCCI-GND < V_{VCCI_ON} during device start-up	H	H	L	L
VCCI-GND < V_{VCCI_ON} during device start-up	L	L	L	L
VCCI-GND < V_{VCCI_OFF} after device start-up	H	L	L	L
VCCI-GND < V_{VCCI_OFF} after device start-up	L	H	L	L
VCCI-GND < V_{VCCI_OFF} after device start-up	H	H	L	L
VCCI-GND < V_{VCCI_OFF} after device start-up	L	L	L	L

Table 7-2. UCC21225A VDD UVLO Feature Logic

CONDITION	INPUTS		OUTPUTS	
	INA	INB	OUTA	OUTB
VDD-VSS < V_{VDD_ON} during device start-up	H	L	L	L
VDD-VSS < V_{VDD_ON} during device start-up	L	H	L	L
VDD-VSS < V_{VDD_ON} during device start-up	H	H	L	L
VDD-VSS < V_{VDD_ON} during device start-up	L	L	L	L
VDD-VSS < V_{VDD_OFF} after device start-up	H	L	L	L
VDD-VSS < V_{VDD_OFF} after device start-up	L	H	L	L
VDD-VSS < V_{VDD_OFF} after device start-up	H	H	L	L

Copyright © 2026 Texas Instruments Incorporated

Table 7-2. UCC21225A VDD UVLO Feature Logic (continued)

CONDITION	INPUTS		OUTPUTS	
	INA	INB	OUTA	OUTB
VDD-VSS < V_{VDD_OFF} after device start-up	L	L	L	L

7.3.2 Input and Output Logic Table

Table 7-3. INPUT/OUTPUT Logic Table

Assume VCCI, VDDA, VDDB are powered up above the UVLO threshold. See Section 7.3.1 for more information on UVLO operation modes.

INPUTS(1)		DISABLE(2)	OUTPUTS		NOTE
INA	INB		OUTA	OUTB	
L	L	L or Left Open	L	L	If Dead Time function is used, output transitions occur after the dead time expires. See Section 7.4.2
L	H	L or Left Open	L	H	
H	L	L or Left Open	H	L	
H	H	L or Left Open	L	L	DT is left open or programmed with R_{DT}
H	H	L or Left Open	H	H	DT pin pulled to VCCI
Left Open	Left Open	L or Left Open	L	L	-
X	X	H	L	L	-

(1) "X" means L, H or left open.
(2) DIS pin disables both driver outputs if asserted high, enables if set low or left open. This pin is pulled low internally if left open. It is recommended to tie this pin to ground if not used to achieve better noise immunity. Bypass using a ≈1nF low ESR/ESL capacitor close to DIS pin when connecting to a µC with distance.

7.3.3 Input Stage

The input pins (INA, INB, and DIS) of UCC21225A are based on a TTL and CMOS compatible input-threshold logic that is totally isolated from the VDD supply voltage. The input pins are easy to drive with logic-level control signals (such as those from 3.3V microcontrollers), since UCC21225A has a typical high threshold (V_{INAH}) of 1.8V and a typical low threshold of 1V, which vary little with temperature (see Figure 5-20, Figure 5-21). A wide hystereses (V_{INA_HYS}) of 0.8V makes for good noise immunity and stable operation. If any of the inputs are left open, internal pull-down resistors force the pin low. These resistors are typically 200kΩ (See Section 7.2). However, it is still recommended to ground an input if it is not being used for improved noise immunity.

Since the input side of UCC21225A is isolated from the output drivers, the input signal amplitude can be larger or smaller than VDD, provided that it does not exceed the recommended limit. This allows greater flexibility when integrating with control signal sources, and allows the user to select the most efficient VDD for any gate. That said, the amplitude of any signal applied to INA or INB must *never* be at a voltage higher than VCCI.

7.3.4 Output Stage

The output stages of UCC21225A feature a pull-up structure which delivers the highest peak-source current when it is most needed, during the Miller plateau region of the power-switch turn on transition (when the power switch drain or collector voltage experiences dV/dt). The output stage pull-up structure features a P-channel MOSFET and an additional *Pull-Up* N-channel MOSFET in parallel. The function of the N-channel MOSFET is to provide a brief boost in the peak-sourcing current, enabling fast turn on. This is accomplished by briefly turning on the N-channel MOSFET during a narrow instant when the output is changing states from low to high. The on-resistance of this N-channel MOSFET (R_{NMOS}) is approximately 1.47Ω when activated.

The R_{OH} parameter is a DC measurement and it is representative of the on-resistance of the P-channel device only. This is because the *Pull-Up* N-channel device is held in the off state in DC condition and is turned on only for a brief instant when the output is changing states from low to high. Therefore the effective resistance of the UCC21225A pull-up stage during this brief turn-on phase is much lower than what is represented by the R_{OH} parameter, yielding a faster turn-on. The turn-on phase output resistance is the parallel combination $R_{OH}||R_{NMOS}$.

Copyright © 2026 Texas Instruments Incorporated

The pull-down structure in UCC21225A is simply composed of an N-channel MOSFET. The R_{OL} parameter, which is also a DC measurement, is representative of the impedance of the pull-down state in the device. Both outputs of the UCC21225A are capable of delivering 4A peak source and 6A peak sink current pulses. The output voltage swing between VDD and VSS provides rail-to-rail operation, thanks to the MOS-out stage which delivers very low drop-out.

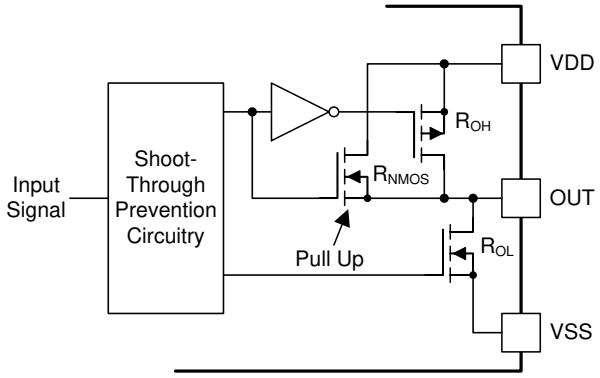

Figure 7-2. Output Stage

7.3.5 Diode Structure in UCC21225A

Figure 7-3 shows the multiple diodes involved in the ESD protection components of the UCC21225A. Figure 7-3 provides a pictorial representation of the absolute maximum rating for the device.

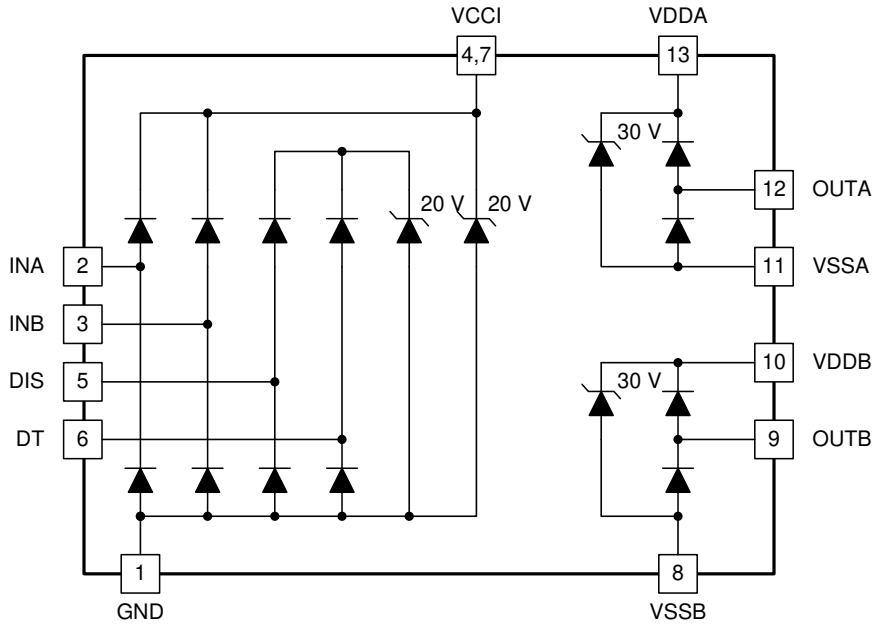

Figure 7-3. ESD Structure

7.4 Device Functional Modes

7.4.1 Disable Pin

Setting the DISABLE pin high shuts down both outputs simultaneously. Grounding (or floating) the DISABLE pin allows UCC21225A to operate normally. The DISABLE response time is in the range of 20ns, limited only by the propagation delay. The DISABLE pin is only functional (and necessary) when VCCI stays above the UVLO threshold. It is recommended to tie this pin to ground if the DISABLE pin is not used to achieve better noise immunity.

Copyright © 2026 Texas Instruments Incorporated

7.4.2 Programmable Dead Time (DT) Pin

UCC21225A allows the user to adjust dead time (DT) in the following ways:

7.4.2.1 Tying the DT Pin to VCC

Outputs completely match inputs, so no dead time is asserted by the IC. This allows outputs to overlap.

7.4.2.2 DT Pin Left Open or Connected to a Programming Resistor Between DT and GND Pins

If the DT pin is left open, the dead-time duration (t_{DT}) is set to <15ns. Program t_{DT} by placing a resistor, R_{DT}, between the DT pin and GND. Determine the appropriate R_{DT} value from Equation 1, where R_{DT} is in kΩ and t_{DT} in ns:

$$t_{DT} \approx 10 \times R_{DT} \quad (1)$$

The steady state voltage at DT pin is around 0.8V, and the DT pin current is less than 10μA when R_{DT} = 100kΩ. Since the DT pin current is used internally to set the dead time, and this current decreases as R_{DT} increases, it is recommended to parallel a ceramic capacitor, 2.2nF or above, close to DT pin to achieve better noise immunity and better dead time matching between two channels, especially when the dead time is larger than 300ns.

The falling edge of an input signal activates the programmed dead time for the other signal. The dead time of an output signal is always set to the longer of either the programmed dead time of the driver or the dead time of the input signal. If both inputs are high simultaneously, both outputs are immediately set low. This feature is used to prevent shoot through, and it does not affect the programmed dead time setting for normal operation. Various driver dead time logic operating conditions are illustrated and explained in Figure 7-4:

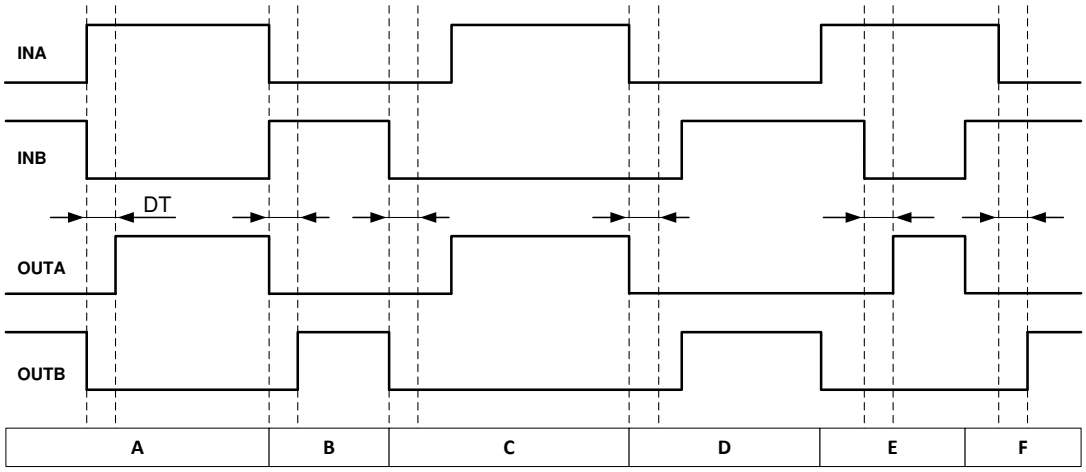

Figure 7-4. Input and Output Logic Relationship With Input Signals

Condition A: INB goes low, INA goes high. INB sets OUTB low immediately and assigns the programmed dead time to OUTA. OUTA is allowed to go high after the programmed dead time.

Condition B: INB goes high, INA goes low. Now INA sets OUTA low immediately and assigns the programmed dead time to OUTB. OUTB is allowed to go high after the programmed dead time.

Condition C: INB goes low, INA is still low. INB sets OUTB low immediately and assigns the programmed dead time for OUTA. In this case, the input signal's *own* dead time is longer than the programmed dead time. Thus, when INA goes high, it immediately sets OUTA high.

Condition D: INA goes low, INB is still low. INA sets OUTA low immediately and assigns the programmed dead time to OUTB. INB's *own* dead time is longer than the programmed dead time. Thus, when INB goes high, it immediately sets OUTB high.

Copyright © 2026 Texas Instruments Incorporated

Condition E: INA goes high, while INB and OUTB are still high. To avoid overshoot, INA immediately pulls OUTB low and keeps OUTA low. After some time OUTB goes low and assigns the programmed dead time to OUTA. OUTB is already low. After the programmed dead time, OUTA is allowed to go high.

Condition F: INB goes high, while INA and OUTA are still high. To avoid overshoot, INB immediately pulls OUTA low and keeps OUTB low. After some time OUTA goes low and assigns the programmed dead time to OUTB. OUTA is already low. After the programmed dead time, OUTB is allowed to go high.

Copyright © 2026 Texas Instruments Incorporated

8 Application and Implementation

Note

Information in the following applications sections is not part of the TI component specification, and TI does not warrant its accuracy or completeness. TI's customers are responsible for determining suitability of components for their purposes, as well as validating and testing their design implementation to confirm system functionality.

8.1 Application Information

The UCC21225A effectively combines both isolation and buffer-drive functions. The flexible, universal capability of the UCC21225A (with up to 18V VCCI and 25V VDDA/VDDB) allows for using the device as a low-side, high-side, high-side/low-side or half-bridge driver for MOSFETs, IGBTs or SiC MOSFETs. With integrated components, advanced protection features (UVLO, dead time, and disable) and optimized switching performance, the UCC21225A enables designers to build smaller, more robust designs for enterprise, telecom, automotive, and industrial applications with a faster time to market.

8.2 Typical Application

The circuit in Figure 8-1 shows a reference design with UCC21225A driving a typical half-bridge configuration is used in several popular power converter topologies such as synchronous buck, synchronous boost, half-bridge/ full bridge isolated topologies, and 3-phase motor drive applications.

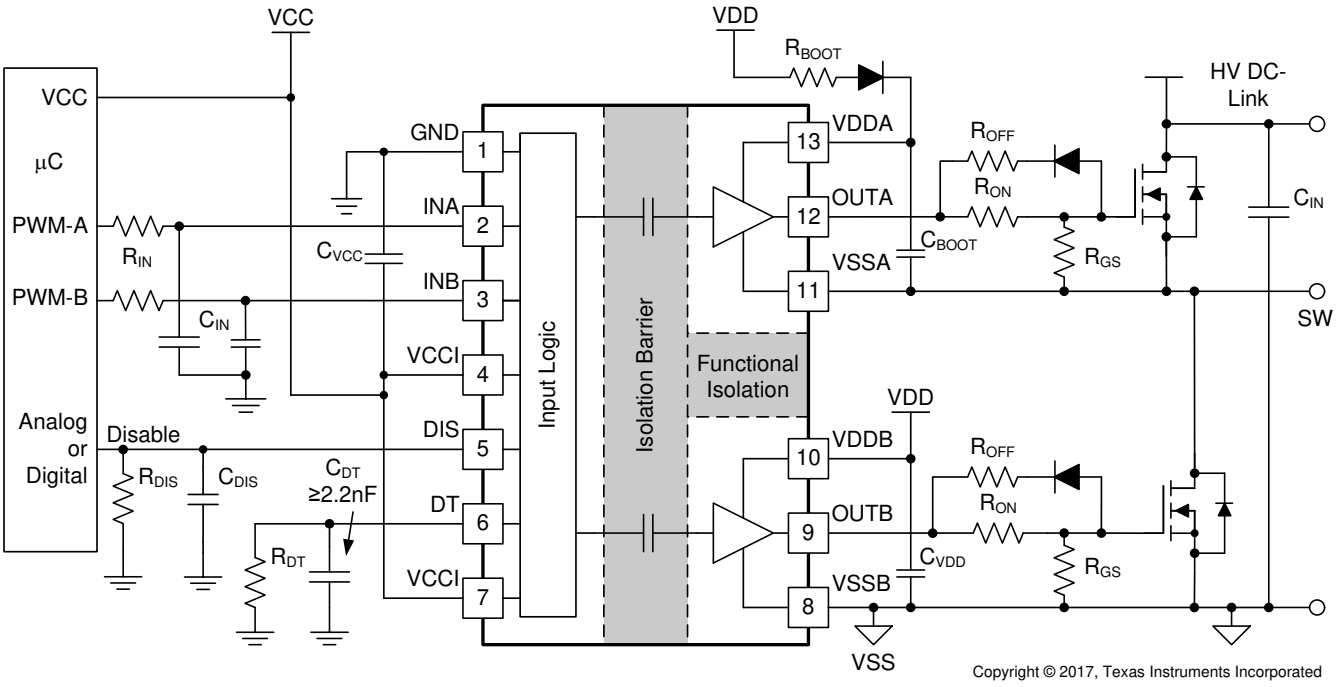

Figure 8-1. Typical Application Schematic

8.2.1 Design Requirements

Table 8-1 lists reference design parameters for the example application: UCC21225A driving 700V MOSFETs in a high side-low side configuration.

Table 8-1. UCC21225A Design Requirements

PARAMETER	VALUE	UNITS
Power transistor	IPB65R150CFD	-
VCC	5.0	V

Copyright © 2026 Texas Instruments Incorporated

Table 8-1. UCC21225A Design Requirements (continued)

PARAMETER	VALUE	UNITS
VDD	12	V
Input signal amplitude	3.3	V
Switching frequency (f_{sw})	100	kHz
DC link voltage	400	V

8.2.2 Detailed Design Procedure

8.2.2.1 Designing INA/INB Input Filter

It is recommended that users avoid shaping the signals to the gate driver to try to slow down (or delay) the signal at the output. However, use a small input R_{IN}-C_{IN} filter to filter out the ringing introduced by non-ideal layout or long PCB traces.

Such a filter must use an R_{IN} in the range from 0Ω to 100Ω and a C_{IN} from 10pF to 100pF. In the example, an R_{IN} = 51Ω and a C_{IN} = 33pF are selected, with a corner frequency of approximately 100MHz.

When selecting these components, it is important to pay attention to the trade-off between good noise immunity and propagation delay.

8.2.2.2 Select External Bootstrap Diode and Series Resistor

The bootstrap capacitor is charged by VDD through an external bootstrap diode every cycle when the low side transistor turns on. Charging the capacitor involves high-peak currents, and therefore transient power dissipation in the bootstrap diode can be significant. Conduction loss also depends on the forward voltage drop of the diode. Both the diode conduction losses and reverse recovery losses contribute to the total losses in the gate driver circuit.

When selecting external bootstrap diodes, it is recommended that one chose high voltage, fast recovery diodes or SiC Schottky diodes with a low forward voltage drop and low junction capacitance to minimize the loss introduced by reverse recovery and related grounding noise bouncing. In the example, the DC-link voltage is $400V_{DC}$. The voltage rating of the bootstrap diode must be higher than the DC-link voltage with a good margin. Therefore, a 600V ultrafast diode, MURA160T3G, is selected in this example.

A bootstrap resistor, R_{BOOT}, is used to reduce the inrush current in D_{BOOT} and limit the ramp-up slew rate of voltage of VDDA-VSSA during each switching cycle, especially when the VSSA (SW) pin has an excessive negative transient voltage. The recommended value for R_{BOOT} is from 1Ω to 20Ω depending on the diode used. In the example, a current limiting resistor of 2.7Ω is selected to limit the inrush current of bootstrap diode. The estimated worst-case peak current through D_{Boot} is,

$$I_{DBoot\,(PK)} = \frac{V_{DD} - V_{BDF}}{R_{BOOT}} = \frac{12V - 1.5V}{2.7\Omega} \approx 4A \quad (2)$$

where

- V_{BDF} is the estimated bootstrap diode forward voltage drop at 4A.

8.2.2.3 Gate Driver Output Resistor

The external gate driver resistors, R_{ON}/R_{OFF}, are used to:

1. Limit ringing caused by parasitic inductances/capacitances.
2. Limit ringing caused by high voltage or current switching dv/dt, di/dt, and body-diode reverse recovery.
3. Fine-tune gate drive strength, that is, peak sink and source current to optimize the switching loss.
4. Reduce electromagnetic interference (EMI).

As mentioned in Section 7.3.4, the UCC21225A has a pull-up structure with a P-channel MOSFET and an additional *pull-up* N-channel MOSFET in parallel. The combined peak source current is 4A. Therefore, predict the peak source current with:

Copyright © 2026 Texas Instruments Incorporated

$$I_{OA+} = \min\left(4A, \frac{V_{DD} - V_{BDF}}{R_{NMOS} \parallel R_{OH} + R_{ON} + R_{GFET_Int}}\right) \quad (3)$$

$$I_{OB+} = \min\left(4A, \frac{V_{DD}}{R_{NMOS} \parallel R_{OH} + R_{ON} + R_{GFET_Int}}\right) \quad (4)$$

where

- R_{ON}: external turn-on resistance
- R_{GFET_Int}: power transistor internal gate resistance, found in the power transistor datasheet
- I_{O+} = peak source current – the minimum value between 4A, the gate driver peak source current, and the calculated value based on the gate drive loop resistance

In this example:

$$I_{OA+} = \frac{V_{DD} - V_{BDF}}{R_{NMOS} \parallel R_{OH} + R_{ON} + R_{GFET_Int}} = \frac{12V - 1.3V}{1.47\Omega \parallel 5\Omega + 2.2\Omega + 1.5\Omega} \approx 2.2A \quad (5)$$

$$I_{OB+} = \frac{V_{DD}}{R_{NMOS} \parallel R_{OH} + R_{ON} + R_{GFET_Int}} = \frac{12V}{1.47\Omega \parallel 5\Omega + 2.2\Omega + 1.5\Omega} \approx 2.5A \quad (6)$$

Therefore, the high-side and low-side peak source currents are 2.2A and 2.5A respectively. Similarly, calculate the peak sink current with:

$$I_{OA-} = \min\left(6A, \frac{V_{DD} - V_{BDF} - V_{GDF}}{R_{OL} + R_{OFF} \parallel R_{ON} + R_{GFET_Int}}\right) \quad (7)$$

$$I_{OB-} = \min\left(6A, \frac{V_{DD} - V_{GDF}}{R_{OL} + R_{OFF} \parallel R_{ON} + R_{GFET_Int}}\right) \quad (8)$$

where

- R_{OFF}: external turn-off resistance
- V_{GDF}: the anti-parallel diode forward voltage drop which is in series with R_{OFF}, the diode in this example is an MSS1P4
- I_{O-}: peak sink current – the minimum value between 6A, the gate driver peak sink current, and the calculated value based on the gate drive loop resistance

In this example,

$$I_{OA-} = \frac{V_{DD} - V_{BDF} - V_{GDF}}{R_{OL} + R_{OFF} \parallel R_{ON} + R_{GFET_Int}} = \frac{12V - 0.8V - 0.75V}{0.55\Omega + 0\Omega + 1.5\Omega} \approx 5.1A \quad (9)$$

$$I_{OB-} = \frac{V_{DD} - V_{GDF}}{R_{OL} + R_{OFF} \parallel R_{ON} + R_{GFET_Int}} = \frac{12V - 0.75V}{0.55\Omega + 0\Omega + 1.5\Omega} \approx 5.5A \quad (10)$$

Therefore, the high-side and low-side peak sink currents are 5.1A and 5.5A respectively.

Importantly, the estimated peak current is also influenced by PCB layout and load capacitance. Parasitic inductance in the gate driver loop can slow down the peak gate drive current and introduce overshoot and undershoot. Therefore, it is strongly recommended to minimize the gate driver loop. On the other hand, the peak source/sink current is dominated by loop parasitics when the load capacitance (C_{ISS}) of the power transistor is very small (typically less than 1nF), because the rising and falling time is too small and close to the parasitic ringing period.

8.2.2.4 Estimate Gate Driver Power Loss

The total loss, P_G, in the gate driver subsystem includes the power losses of the UCC21225A (P_{GD}) and the power losses in the peripheral circuitry, such as the external gate drive resistor. Bootstrap diode loss is not included in P_G and is not described in this section.

Copyright © 2026 Texas Instruments Incorporated

P_{GD} is the key power loss which determines the thermal safety-related limits of the UCC21225A. Estimate the thermal safety-related limits by calculating losses from several components.

The first component is the static power loss, P_{GDQ}, which includes quiescent power loss on the driver as well as driver self-power consumption when operating with a certain switching frequency. P_{GDQ} is measured on the bench with no load connected to OUTA and OUTB at a given VCCI, VDDA/VDDB, switching frequency and ambient temperature. Figure 5-4 shows the per output channel current consumption versus operating frequency with no load. In this example, V_{VCCI} = 5V and V_{VDD} = 12V. The current on each power supply, with INA/INB switching from 0V to 3.3V at 200kHz, is measured to be I_{VCCI} = 2mA, and I_{VDDA} = I_{VDDB} = 1.5mA. Therefore, calculate the P_{GDQ} with:

$$P_{GDQ} = V_{VCCI} \times I_{VCCI} + V_{VDDA} \times I_{VDDA} + V_{VDDB} \times I_{VDDB} \approx 46mW \quad (11)$$

The second component is switching operation loss, P_{GDO}, with a given load capacitance which the driver charges and discharges the load during each switching cycle. Estimate total dynamic loss due to load switching, $P_{GSW}$with:

$$P_{GSW} = 2 \times V_{DD} \times Q_G \times f_{SW} \quad (12)$$

where

- Q_G is the gate charge of the power transistor at V_{VDD}.

If a split rail is used for turn on and turn off, then V_{VDD} is the total difference between the positive rail to the negative rail.

So, for this example application:

$$P_{GSW} = 2 \times 12V \times 100nC \times 200kHz = 480mW \quad (13)$$

Q_G represents the total gate charge of the power transistor switching 400V at 14A, and is subject to change with different testing conditions. The UCC21225A gate driver loss on the output stage, P_{GDO}, is part of P_{GSW}. P_{GDO} is equal to P_{GSW} if the external gate driver resistances and power transistor internal resistances are 0Ω, and all the gate driver loss dissipates inside the UCC21225A. If there are external turn-on and turn-off resistances, the total loss distributes between the gate driver pull-up and pull-down resistances, external gate resistances, and power transistor internal resistances. Importantly, the pull-up and pull-down resistance is a linear and fixed resistance if the source/sink current is not saturated to 4A/6A, however, it is non-linear if the source/sink current is saturated. Therefore, P_{GDO} is different in these two scenarios.

Case 1 - Linear Pull-Up/Down Resistor:

$$P_{GDO} = \frac{P_{GSW}}{2}\left(\frac{R_{OH} \parallel R_{NMOS}}{R_{OH} \parallel R_{NMOS} + R_{ON} + R_{GFET_Int}} + \frac{R_{OL}}{R_{OL} + R_{OFF} \parallel R_{ON} + R_{GFET_Int}}\right) \quad (14)$$

In this design example, all the predicted source/sink currents are less than 4A/6A, therefore, the UCC21225A gate driver loss can be estimated with:

$$P_{GDO} = \frac{480mW}{2}\left(\frac{5\Omega \parallel 1.47\Omega}{5\Omega \parallel 1.47\Omega + 2.2\Omega + 1.5\Omega} + \frac{0.55\Omega}{0.55\Omega + 0\Omega + 1.5\Omega}\right) \approx 120mW \quad (15)$$

Case 2 - Nonlinear Pull-Up/Down Resistor:

$$P_{GDO} = 2 \times f_{SW} \times \left[4A \times \int_0^{T_{R_Sys}} \left(V_{DD} - V_{OUT_{A/B}}(t)\right)dt + 6A \times \int_0^{T_{F_Sys}} V_{OUT_{A/B}}(t)dt\right] \quad (16)$$

where

- $V_{OUTA/B}(t)$ is the gate driver OUTA and OUTB pin voltage during the turn on and off period. In cases where the output is saturated for some time, this can be simplified as a constant current source (4A at turn-on and

Copyright © 2026 Texas Instruments Incorporated

6A at turn-off) charging/discharging a load capacitor. Then, the $V_{OUTA/B}(t)$ waveform is linear and the T_{R_Sys} and T_{F_Sys} is easily predicted.

For some scenarios, if only one of the pull-up or pull-down circuits is saturated and another one is not, the P_{GDO} is a combination of Case 1 and Case 2, and the equations can be easily identified for the pull-up and pull-down based on the above discussion.

The total gate driver loss dissipated in the gate driver UCC21225A, P_{GD}, is:

$$P_{GD} = P_{GDQ} + P_{GDO} = 46mW + 120mW = 166mW \quad (17)$$

8.2.2.5 Estimating Junction Temperature

Estimate the junction temperature (T_J) of the UCC21225A with:

$$T_J = T_C + \Psi_{JT} \times P_{GD} \quad (18)$$

where

- T_C is the UCC21225A case-top temperature measured with a thermocouple or some other instrument, and
- Ψ_{JT} is the Junction-to-top characterization parameter from the Section 5.4 table.

Using the junction-to-top characterization parameter (Ψ_{JT}) instead of the junction-to-case thermal resistance ($R_{\Theta JC}$) can greatly improve the accuracy of the junction temperature estimation. Most of the thermal energy of most ICs is released into the PCB through the package leads, whereas only a small percentage of the total energy is released through the top of the case (where thermocouple measurements are usually conducted). $R_{\Theta JC}$ is only used effectively when most of the thermal energy is released through the case, such as with metal packages or when a heatsink is applied to an IC package. In all other cases, use of $R_{\Theta JC}$ inaccurately estimates the true junction temperature. Ψ_{JT} is experimentally derived by assuming that the amount of energy leaving through the top of the IC is similar in both the testing environment and the application environment. As long as the recommended layout guidelines are observed, calculate junction temperature estimates accurately to within a few degrees Celsius. See also the Semiconductor and IC Package Thermal Metrics application note.

8.2.2.6 Selecting VCCI, VDDA/B Capacitor

Bypass capacitors for VCCI, VDDA, and VDDB are essential for achieving reliable performance. It is recommended that one select low ESR and low ESL surface-mount multi-layer ceramic capacitors (MLCC) with sufficient voltage ratings, temperature coefficients and capacitance tolerances. Importantly, DC bias on some MLCCs impacts the actual capacitance value. For example, a 25V, 1µF X7R capacitor is measured to be only 500nF when a DC bias of $15V_{DC}$ is applied.

8.2.2.6.1 Selecting a VCCI Capacitor

A bypass capacitor connected to VCCI supports the transient current needed for the primary logic and the total current consumption, which is only a few mA. Therefore, a 50V MLCC with over 100nF is recommended for this application. If the bias power supply output is a relatively long distance from the VCCI pin, place a tantalum or electrolytic capacitor with a value over 1µF in parallel with the MLCC.

8.2.2.6.2 Selecting a VDDA (Bootstrap) Capacitor

A VDDA capacitor, also referred to as a *bootstrap capacitor* in bootstrap power supply configurations, allows for gate drive current transients up to 6A, and must maintain a stable gate drive voltage for the power transistor.

Estimate the total charge needed per switching cycle with:

$$Q_{Total} = Q_G + \frac{I_{VDD\ @\ 200kHz\ (No\ Load)}}{f_{SW}} = 100nC + \frac{1.5mA}{200kHz} = 107.5nC \quad (19)$$

where

- Q_G: Gate charge of the power transistor at V_{VDD}
- I_{VDD}: The channel self-current consumption with no load at 200kHz.

Copyright © 2026 Texas Instruments Incorporated

Therefore, the absolute minimum C_{Boot} requirement is:

$$C_{Boot} = \frac{Q_{Total}}{\Delta V_{DDA}} = \frac{107.5nC}{0.5V} \approx 0.22\mu F \quad (20)$$

where

- ΔV_{VDDA} is the voltage ripple at VDDA, which is 0.5V in this example.

In practice, the value of C_{Boot} is greater than the calculated value. This allows for the capacitance shift the DC bias voltage causes and for situations where the power stage otherwise skips pulses due to load transients. Therefore, it is recommended to include a safety-related margin in the C_{Boot} value and place it as close to the VDD and VSS pins as possible. A 50V 1µF capacitor is selected in this example.

$$C_{Boot} = 1\mu F \quad (21)$$

To further lower the AC impedance for a wide frequency range, it is recommended to have bypass capacitor with a low capacitance value, in this example a 100nF, in parallel with C_{Boot} to optimize the transient performance.

Note

Too much C_{BOOT} can be detrimental. Do not charge the C_{BOOT} within the first few cycles and V_{BOOT} can stay below UVLO. As a result, the high-side FET does not follow input signal commands for several cycles. Also during initial C_{BOOT} charging cycles, the bootstrap diode has highest reverse recovery current and losses.

8.2.2.6.3 Select a VDDB Capacitor

Channel B has the same current requirements as Channel A. Therefore, a VDDB capacitor (C_{VDD} in Figure 8-1) is needed. In this example with a bootstrap configuration, the VDDB capacitor also supplies current for VDDA through the bootstrap diode. A 50V, 10µF MLCC and a 50V, 0.22µF MLCC are selected for C_{VDD}. If the bias power supply output is a relatively long distance from the VDDB pin, use a tantalum or electrolytic capacitor with a value over 10µF in parallel with C_{VDD}.

8.2.2.7 Dead Time Setting Guidelines

For power converter topologies using half-bridges, the dead-time setting between the top and bottom transistor is important for preventing shoot-through during dynamic switching.

The UCC21225A dead-time specification in the electrical table is defined as the time interval from 90% of the falling edge of one channel to 10% of the rising edge of the other channel (see Figure 6-4). This definition establishes that the dead time setting is independent of the load condition, and confirms linearity through manufacture testing. However, this dead-time setting may not reflect the dead time in the power converter system, since the dead-time setting depends on the external gate drive turn-on/off resistor, DC-Link switching voltage/current, as well as the input capacitance of the load transistor.

Here is a suggestion on how to select an appropriate dead time for UCC21225A:

$$DT_{Setting} = DT_{Req} + T_{F_Sys} + T_{R_Sys} - T_{D(on)} \quad (22)$$

where

- $DT_{Setting}$: UCC21225A dead-time setting in ns,

$$DT_{Setting} = 10 \times RDT \text{ (in k}\Omega) \quad (23)$$

- DT_{Req}: System required dead time between the real V_{GS} signal of the top and bottom switch with enough margin, or ZVS requirement
- T_{F_Sys}: In-system gate turn-off falling time at worst case of load, voltage and current conditions
- T_{R_Sys}: In-system gate turn-on rising time at worst case of load, voltage and current conditions

Copyright © 2026 Texas Instruments Incorporated

- $T_{D(on)}$: Turn-on delay time, from 10% of the transistor gate signal to power transistor gate threshold

In the example, $DT_{Setting}$ is set to 250ns.

The DT pin configuration decides the UCC21225A dead-time setting (see Section 7.4.2), and it cannot automatically fine-tune the dead time based on system conditions. It is recommended to parallel a ceramic capacitor, 2.2nF or above, close to DT pin to achieve better noise immunity and dead time matching.

8.2.2.8 Application Circuits with Output Stage Negative Bias

When parasitic inductances are introduced by non-ideal PCB layout and long package leads (for example, TO-220 and TO-247 type packages), there can be ringing in the gate-source drive voltage of the power transistor during high di/dt and dv/dt switching. If the ringing is over the threshold voltage, there is the risk of unintended turn-on and even shoot-through. Applying a negative bias on the gate drive is a popular way to keep such ringing below the threshold. Below are a few examples of implementing negative gate drive bias.

Figure 8-2 shows the first example with negative bias turn-off on the channel-A driver using a Zener diode on the isolated power supply output stage. The Zener diode voltage sets the negative bias. If the isolated power supply, V_A, is equal to 25V, the turn-off voltage is –5.1V and turn-on voltage is 25V – 5.1V ≈ 20V. The channel-B driver circuit is the same as channel-A, therefore, this configuration needs two power supplies for a half-bridge configuration, and there is steady state power consumption from R_Z.

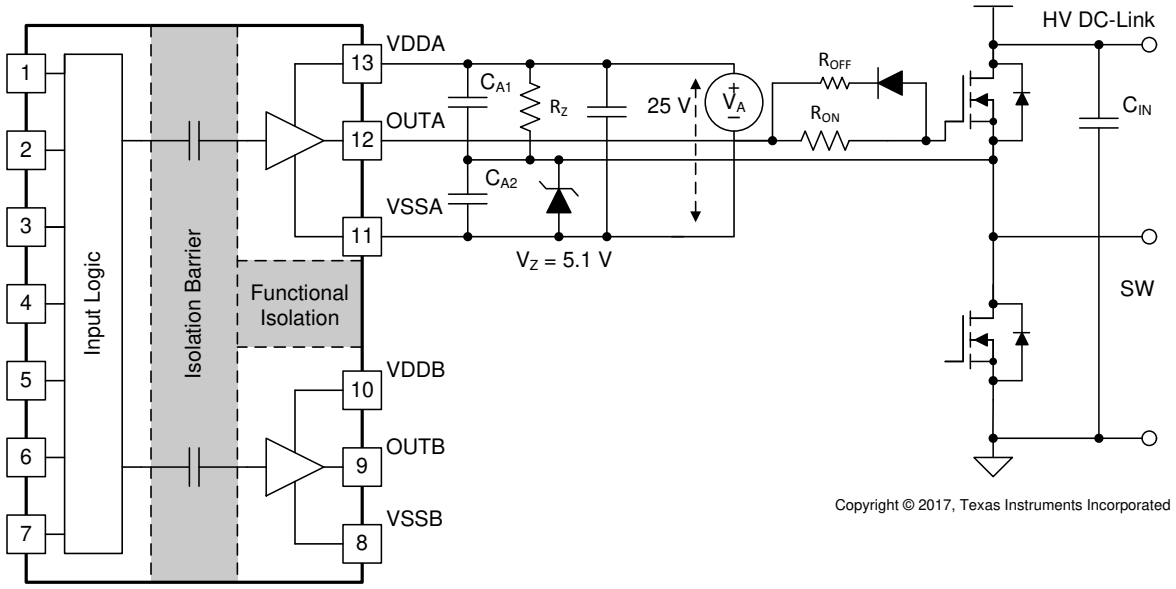

Figure 8-2. Negative Bias with Zener Diode on Iso-Bias Power Supply Output

Figure 8-3 shows another example which uses two supplies (or single-input-double-output power supply). Power supply V_{A+} determines the positive drive output voltage and $V_{A–}$ determines the negative turn-off voltage. The configuration for channel B is the same as channel A. This method requires more power supplies than the first example, however, it provides more flexibility when setting the positive and negative rail voltages.

Copyright © 2026 Texas Instruments Incorporated

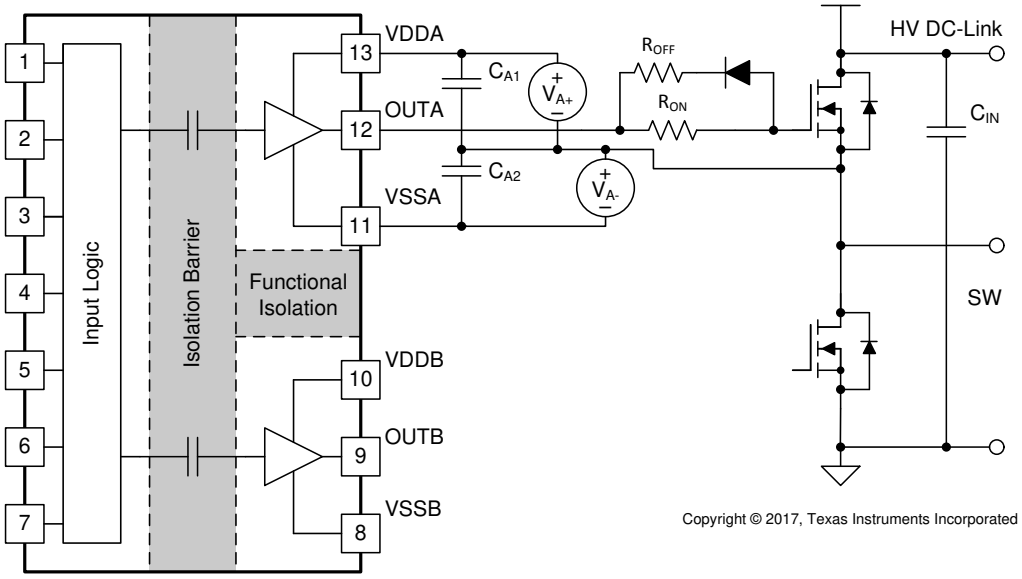

Figure 8-3. Negative Bias with Two Iso-Bias Power Supplies

The last example, as Figure 8-4 shows, is one power supply configuration and generates negative bias through a Zener diode in the gate drive loop. The benefit of this option is that it only uses one power supply and there is the option to use the bootstrap power supply for the high side drive. This design requires the least cost and design effort among the three methods. However, this option has limitations:

1. The negative gate drive bias is not only determined by the Zener diode, but also by the duty cycle, which means the negative bias voltage changes when the duty cycle changes. Therefore, converters with a fixed duty cycle (approximately 50%) such as variable frequency resonant converters or phase-shift converters favor this option.
2. The high side VDDA-VSSA must maintain enough voltage to stay in the recommended power supply range, which means the low side switch must turn on or have free-wheeling current on the body (or anti-parallel) diode for a certain period during each switching cycle to refresh the bootstrap capacitor. Therefore, a 100% duty cycle for the high side is not possible unless there is a dedicated power supply for the high side, like in the other two example circuits.

Copyright © 2026 Texas Instruments Incorporated

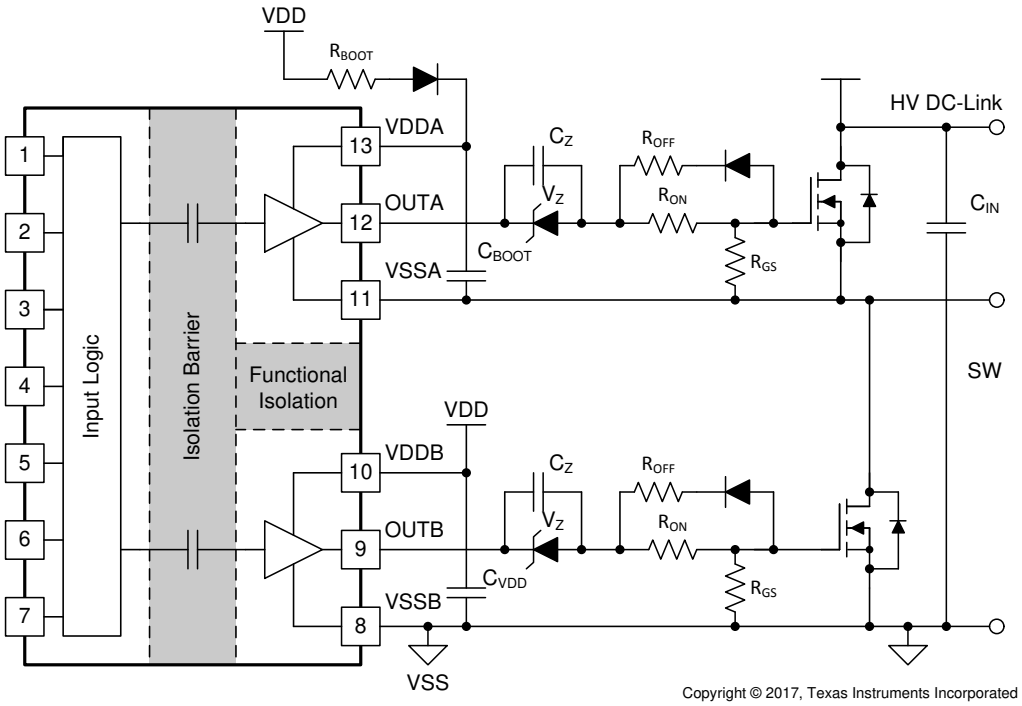

Figure 8-4. Negative Bias with Single Power Supply and Zener Diode in Gate Drive Path

8.2.3 Application Curves

Figure 8-5 and Figure 8-6 shows the bench test waveforms for the design example that Figure 8-1 shows under the conditions: VCC = 5V, VDD = 12V, f_{SW} = 200kHz, $V_{DC\text{-}Link}$ = 400V.

Channel 1 (Indigo): UCC21225A INA pin signal.

Channel 2 (Cyan): UCC21225A INB pin signal.

Channel 3 (Magenta): Gate-source signal on the high side power transistor.

Channel 4 (Green): Gate-source signal on the low side power transistor.

In Figure 8-5, INA and INB are sent complimentary 3.3V, 20%/80% duty-cycle signals. The gate drive signals on the power transistor have a 250ns dead time, as the measurement section of Figure 8-5 shows. The dead time matching is approximately 10ns with the 250ns dead-time setting. Note that with high voltage present, lower bandwidth differential probes are required, which limits the achievable accuracy of the measurement.

Figure 8-6 shows a zoomed-in version of the waveform of Figure 8-5, with measurements for propagation delay and rising or falling time. Importantly, the output waveform is measured between the gate and source pins of the power transistors, and is not measured directly from the driver OUTA and OUTB pins. Due to the split on and off resistors (R_{on}, R_{off}), different sink and source currents, and the Miller plateau, different rising (60, 120ns) and falling time (25ns) are observed in Figure 8-6.

Copyright © 2026 Texas Instruments Incorporated

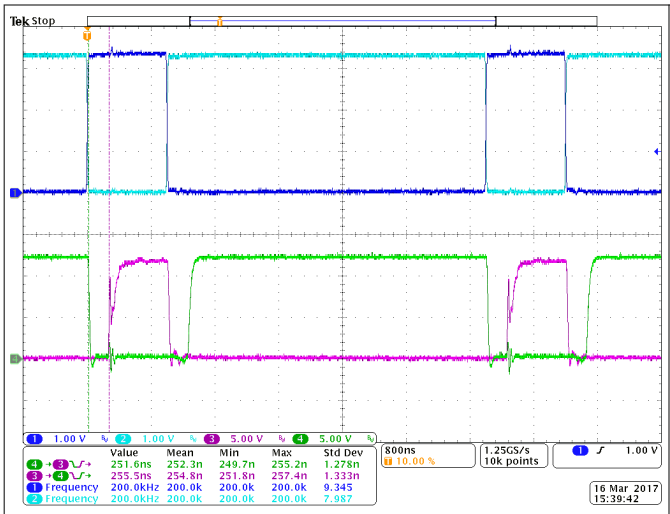

Figure 8-5. Bench Test Waveform for INA/B and OUTA/B

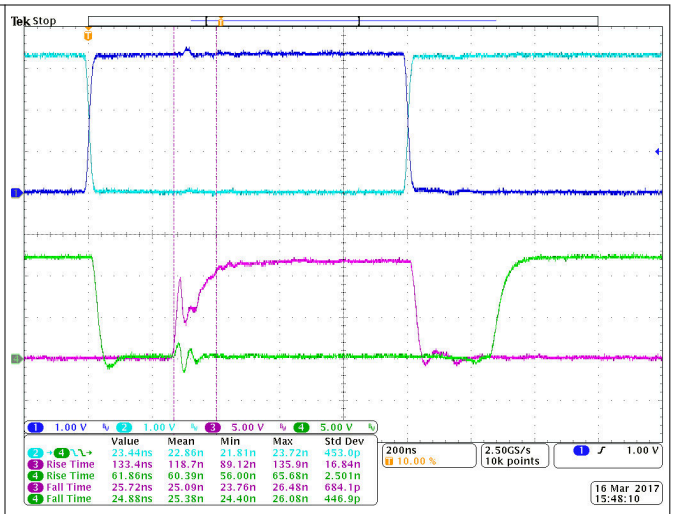

Figure 8-6. Zoomed-In Bench-test waveform

8.3 Power Supply Recommendations

The recommended input supply voltage (VCCI) for UCC21225A is from 3V to 18V. The lower end of the output bias supply voltage (VDDA/VDDB) range is governed by the internal undervoltage lockout (UVLO) protection feature of the device. VDD and VCCI must not fall below the respective UVLO thresholds for normal operation, or else gate driver outputs can become clamped low for >50µs by the UVLO protection feature. (For more information on UVLO see Section 7.3.1). The upper end of the VDDA/VDDB range depends on the maximum gate voltage of the power device being driven by UCC21225A, and must not exceed the recommended maximum VDDA/VDDB of 25V.

Place a local bypass capacitor between the VDD and VSS pins, with a value of from 220nF to 10µF for device biasing. It is further suggested that an additional 100nF capacitor be placed in parallel with the device biasing capacitor for high-frequency filtering. Position both capacitors as close to the device as possible. Low ESR, ceramic surface-mount capacitors are recommended.

Similarly, place a bypass capacitor between the VCCI and GND pins. Given the small amount of current drawn by the logic circuitry within the input side of UCC21225A, this bypass capacitor has a minimum recommended value of 100nF.

8.4 Layout

8.4.1 Layout Guidelines

Designers must pay close attention to PCB layout to achieve optimum performance for the UCC21225A. Below are some key points.

Component Placement:

- Connect low-ESR and low-ESL capacitors close to the device between the VCCI and GND pins and between the VDD and VSS pins to bypass noise and to support high peak currents when turning on the external power transistor.
- To avoid large negative transients on VSS pins connected to the switch node, minimize the parasitic inductances between the source of the top transistor and the source of the bottom transistor.
- It is recommended to place the dead time setting resistor, R_{DT}, and its bypassing capacitor close to DT pin of UCC21225A.
- It is recommended to bypass using a ≈1nF low ESR/ESL capacitor, C_{DIS}, close to DIS pin when connecting to a µC with distance.

Grounding Considerations:

Copyright © 2026 Texas Instruments Incorporated

- It is essential to confine the high peak currents that charge and discharge the transistor gates to a minimal physical area. This decreases the loop inductance and minimize noise on the gate terminals of the transistors. Place the gate driver as close as possible to the transistors as possible.
- Pay attention to high current path that includes the bootstrap capacitor, bootstrap diode, local VSSB-referenced bypass capacitor, and the low-side transistor body/anti-parallel diode. The bootstrap capacitor is recharged on a cycle-by-cycle basis through the bootstrap diode by the VDD bypass capacitor. This recharging occurs in a short time interval and involves a high peak current. Minimizing this loop length and area on the circuit board is important for establishing reliable operation.

High-Voltage Considerations:

- To verify isolation performance between the primary and secondary side, avoid placing any PCB traces or copper below the driver device. PCB cutting or scoring beneath the IC are not recommended, since this can severely exacerbate board warping and twisting issues.
- For half-bridge, or high-side/low-side configurations, where the channel A and channel B drivers can operate with a DC-link voltage up to $700V_{DC}$, try to increase the creepage distance of the PCB layout between the high and low-side PCB traces.

Thermal Considerations:

- If the driving voltage is high, the load is heavy, or the switching frequency is high, the UCC21225A can dissipate a large amount of power (see Section 8.2.2.4 for more details). Proper PCB layout can help dissipate heat from the device to the PCB and minimize junction to board thermal impedance (θ_{JB}).
- Increasing the PCB copper connecting to VDDA, VDDB, VSSA and VSSB pins is recommended, with priority on maximizing the connection to VSSA and VSSB (see Figure 8-8 and Figure 8-9). However, maintain the high voltage PCB considerations mentioned above.
- If there are multiple layers in the system, it is also recommended to connect the VDDA, VDDB, VSSA and VSSB pins to internal ground or power planes through multiple vias of adequate size. Locate these vias close to the IC pins to maximize thermal conductivity. However, keep in mind that there must not be overlapping any traces/coppers from different high voltage planes.

8.4.2 Layout Example

Figure 8-7 shows a 2-layer PCB layout example with the signals and key components labeled.

Copyright © 2026 Texas Instruments Incorporated

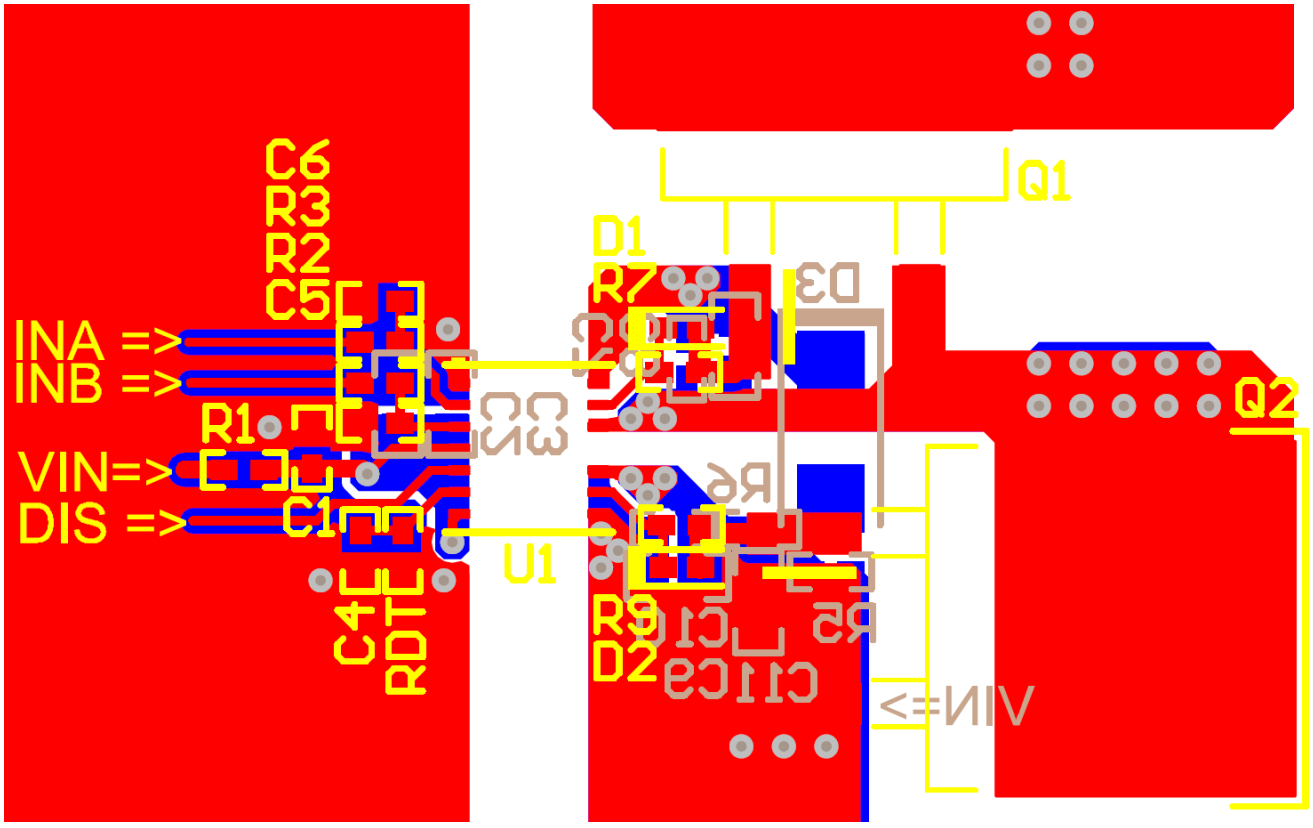

Figure 8-7. Layout Example

Figure 8-8 and Figure 8-9 shows top and bottom layer traces and copper.

Note

There are no PCB traces or copper between the primary and secondary side, which establishes isolation performance.

PCB trace spacing between the high-side and low-side gate drivers in the output stage are increased to minimize cross-talk due to parasitic capacitance coupling between the switching node VSSA (SW), where high dv/dt can exist, and the low-side gate drive circuit.

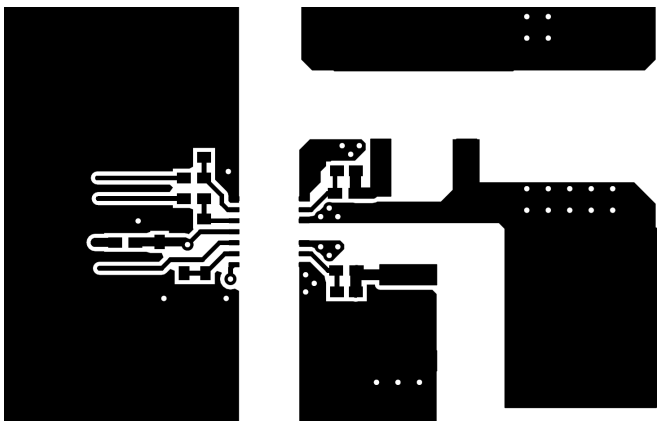

Figure 8-8. Top Layer Traces and Copper

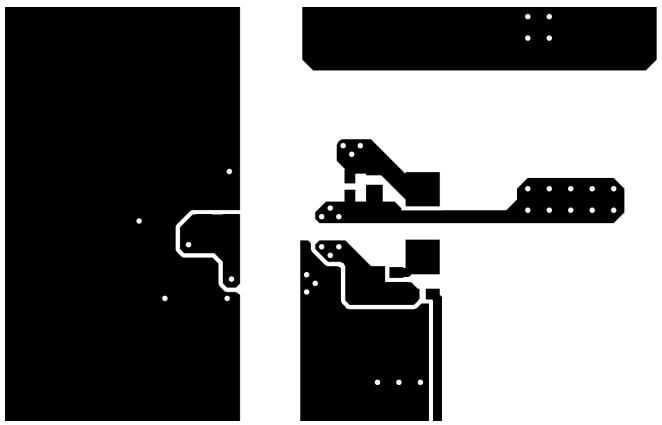

Figure 8-9. Bottom Layer Traces and Copper

Copyright © 2026 Texas Instruments Incorporated

Figure 8-10 and Figure 8-11 are 3D layout pictures with top view and bottom views.

Note

The location of the PCB cutout between the primary side and secondary sides, which establishes isolation performance.

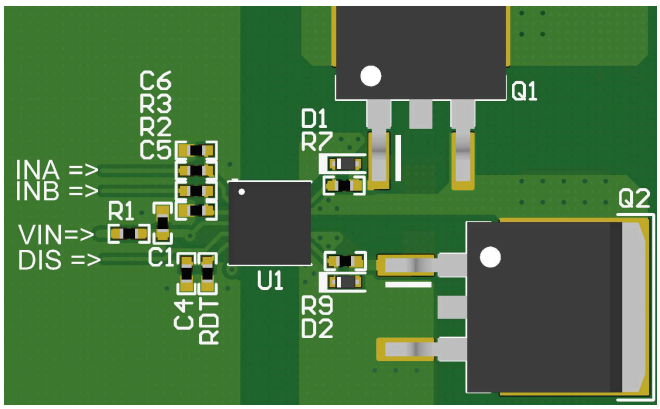

Figure 8-10. 3D PCB Top View

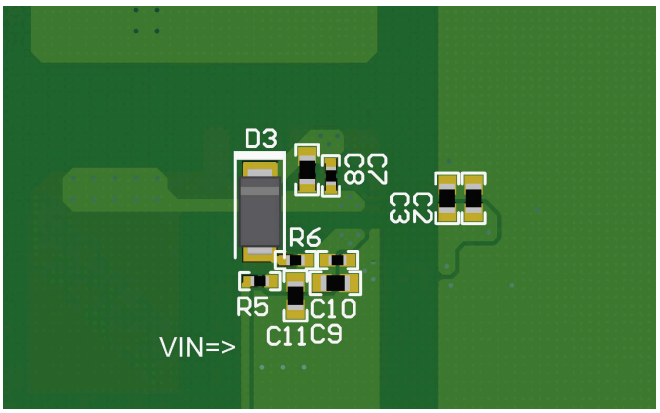

Figure 8-11. 3D PCB Bottom View

Copyright © 2026 Texas Instruments Incorporated

9 Device and Documentation Support

9.1 Device Support

9.1.1 Third-Party Products Disclaimer

TI'S PUBLICATION OF INFORMATION REGARDING THIRD-PARTY PRODUCTS OR SERVICES DOES NOT CONSTITUTE AN ENDORSEMENT REGARDING THE SUITABILITY OF SUCH PRODUCTS OR SERVICES OR A WARRANTY, REPRESENTATION OR ENDORSEMENT OF SUCH PRODUCTS OR SERVICES, EITHER ALONE OR IN COMBINATION WITH ANY TI PRODUCT OR SERVICE.

9.2 Documentation Support

9.2.1 Related Documentation

For related documentation see the following: Isolation Glossary

9.3 Receiving Notification of Documentation Updates

To receive notification of documentation updates, navigate to the device product folder on ti.com. Click on *Notifications* to register and receive a weekly digest of any product information that has changed. For change details, review the revision history included in any revised document.

9.4 Certifications

UL Online Certifications Directory, *"FPPT2.E181974 Nonoptical Isolating Devices - Component"* Certificate Number: 20170718E181974,

VDE Pruf- und Zertifizierungsinstitut Certification, Certificate of Conformity with Factory Surveillance

9.4.1 Receiving Notification of Documentation Updates

To receive notification of documentation updates, navigate to the device product folder on ti.com. In the upper right corner, click on *Alert me* to register and receive a weekly digest of any product information that has changed. For change details, review the revision history included in any revised document.

9.5 Support Resources

TI E2E™ support forums are an engineer's go-to source for fast, verified answers and design help — straight from the experts. Search existing answers or ask your own question to get the quick design help you need.

Linked content is provided "AS IS" by the respective contributors. They do not constitute TI specifications and do not necessarily reflect TI's views; see TI's Terms of Use.

9.6 Trademarks

TI E2E™ is a trademark of Texas Instruments.
All trademarks are the property of their respective owners.

9.7 Electrostatic Discharge Caution



This integrated circuit can be damaged by ESD. Texas Instruments recommends that all integrated circuits be handled with appropriate precautions. Failure to observe proper handling and installation procedures can cause damage.

ESD damage can range from subtle performance degradation to complete device failure. Precision integrated circuits may be more susceptible to damage because very small parametric changes could cause the device not to meet its published specifications.

9.8 Glossary

TI Glossary	This glossary lists and explains terms, acronyms, and definitions.

Copyright © 2026 Texas Instruments Incorporated

10 Revision History

NOTE: Page numbers for previous revisions may differ from page numbers in the current version.

Changes from Revision A (February 2018) to Revision B (November 2026)	Page
• Updated the numbering format for tables, figures, and cross-references throughout the document	1
• Updated safety-related certifications from GB4943.1-2011 to GB4943.1-2022 throughout document	1
• Added certification number: CQC18001186974	6

Changes from Revision * (April 2017) to Revision A (February 2018)	Page
• Changed the descriptions on feature, application and description sections	1
• Changed Safety-Related and Regulatory Approvals to Safety-Related Certifications	1
• Changed UL, VDE and CQC safety-related certification descriptions in features section from planned to completed	1
• Deleted CSA certification description	1
• Changed detailed description for DISABLE Pin and DT Pin	3
• Changed the testing conditions for the power ratings	5
• Changed the overvoltage category on the insulation specification section	5
• Changed from VDE V 0884-10:2006-12 to VDE V 0884-11:2017-01 in safety-related certifications	5
• Changed V_{IOSM} in insulation specifications from $3535V_{PK}$ to $3500V_{PK}$	5
• Changed from VDE V 0884-10 to VDE V 0884-11 in insulation specification and safety-related certification table	6
• Added certification number for VDE, UL and CQC in safety-related certification table	6
• Added $320V_{RMS}$ maximum working voltage in the safety-related certification table	6
• Changed table note to explain how safety-limiting values are calculated	6
• Added minimum specifications for propagation delay t_{PDHL} and t_{PDLH}	8
• Added CMTI specification to be replaced by $\|CM_H\|$ and $\|CM_L\|$	8
• Added feature description for UVLO delay to OUTPUT	15
• Added footnote on INPUT/OUTPUT logic table	20
• Added bullet "It is recommended..." bullet to the component placement in the Layout Guidelines section	33
• Added UL, VDE and CQC online certification directory to the certification section	37

11 Mechanical, Packaging, and Orderable Information

The following pages include mechanical, packaging, and orderable information. This information is the most current data available for the designated devices. This data is subject to change without notice and revision of this document. For browser-based versions of this data sheet, refer to the left-hand navigation.

Copyright © 2026 Texas Instruments Incorporated

PACKAGING INFORMATION

Orderable part number	Status (1)	Material type (2)	Package | Pins	Package qty | Carrier	RoHS (3)	Lead finish/ Ball material (4)	MSL rating/ Peak reflow (5)	Op temp (°C)	Part marking (6)
UCC21225ANPLR	Active	Production	VLGA (NPL) | 13	3000 | LARGE T&R	Yes	NIAU	Level-3-260C-168 HR	-40 to 125	UCC21225A
UCC21225ANPLR.A	Active	Production	VLGA (NPL) | 13	3000 | LARGE T&R	Yes	NIAU	Level-3-260C-168 HR	-40 to 125	UCC21225A

(1) **Status:** For more details on status, see our product life cycle.

(2) **Material type:** When designated, preproduction parts are prototypes/experimental devices, and are not yet approved or released for full production. Testing and final process, including without limitation quality assurance, reliability performance testing, and/or process qualification, may not yet be complete, and this item is subject to further changes or possible discontinuation. If available for ordering, purchases will be subject to an additional waiver at checkout, and are intended for early internal evaluation purposes only. These items are sold without warranties of any kind.

(3) **RoHS values:** Yes, No, RoHS Exempt. See the TI RoHS Statement for additional information and value definition.

(4) **Lead finish/Ball material:** Parts may have multiple material finish options. Finish options are separated by a vertical ruled line. Lead finish/Ball material values may wrap to two lines if the finish value exceeds the maximum column width.

(5) **MSL rating/Peak reflow:** The moisture sensitivity level ratings and peak solder (reflow) temperatures. In the event that a part has multiple moisture sensitivity ratings, only the lowest level per JEDEC standards is shown. Refer to the shipping label for the actual reflow temperature that will be used to mount the part to the printed circuit board.

(6) **Part marking:** There may be an additional marking, which relates to the logo, the lot trace code information, or the environmental category of the part.

Multiple part markings will be inside parentheses. Only one part marking contained in parentheses and separated by a "~" will appear on a part. If a line is indented then it is a continuation of the previous line and the two combined represent the entire part marking for that device.

Important Information and Disclaimer: The information provided on this page represents TI's knowledge and belief as of the date that it is provided. TI bases its knowledge and belief on information provided by third parties, and makes no representation or warranty as to the accuracy of such information. Efforts are underway to better integrate information from third parties. TI has taken and continues to take reasonable steps to provide representative and accurate information but may not have conducted destructive testing or chemical analysis on incoming materials and chemicals. TI and TI suppliers consider certain information to be proprietary, and thus CAS numbers and other limited information may not be available for release.

In no event shall TI's liability arising out of such information exceed the total purchase price of the TI part(s) at issue in this document sold by TI to Customer on an annual basis.

TAPE AND REEL INFORMATION

REEL DIMENSIONS

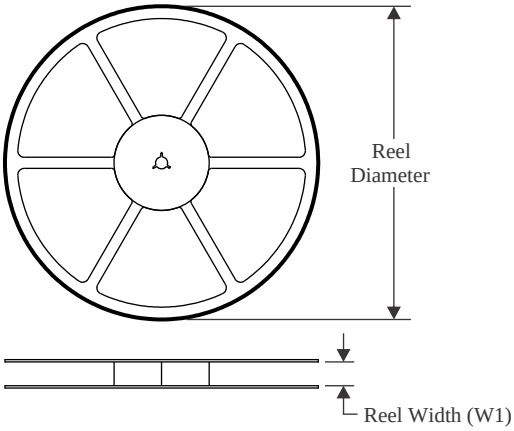

TAPE DIMENSIONS

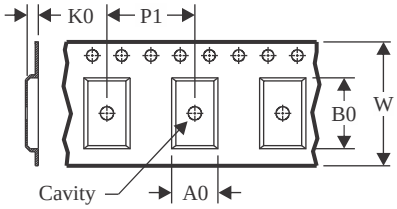

A0	Dimension designed to accommodate the component width
B0	Dimension designed to accommodate the component length
K0	Dimension designed to accommodate the component thickness
W	Overall width of the carrier tape
P1	Pitch between successive cavity centers

QUADRANT ASSIGNMENTS FOR PIN 1 ORIENTATION IN TAPE

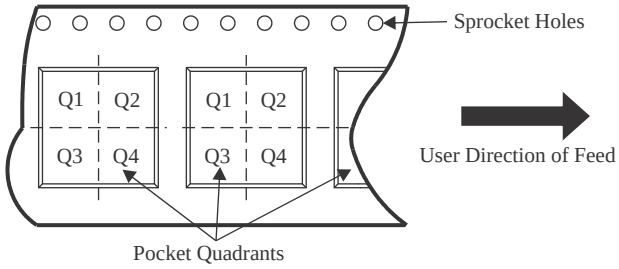

*All dimensions are nominal

Device	Package Type	Package Drawing	Pins	SPQ	Reel Diameter (mm)	Reel Width W1 (mm)	A0 (mm)	B0 (mm)	K0 (mm)	P1 (mm)	W (mm)	Pin1 Quadrant
UCC21225ANPLR	VLGA	NPL	13	3000	330.0	12.4	5.3	5.3	1.5	8.0	12.0	Q1

TAPE AND REEL BOX DIMENSIONS

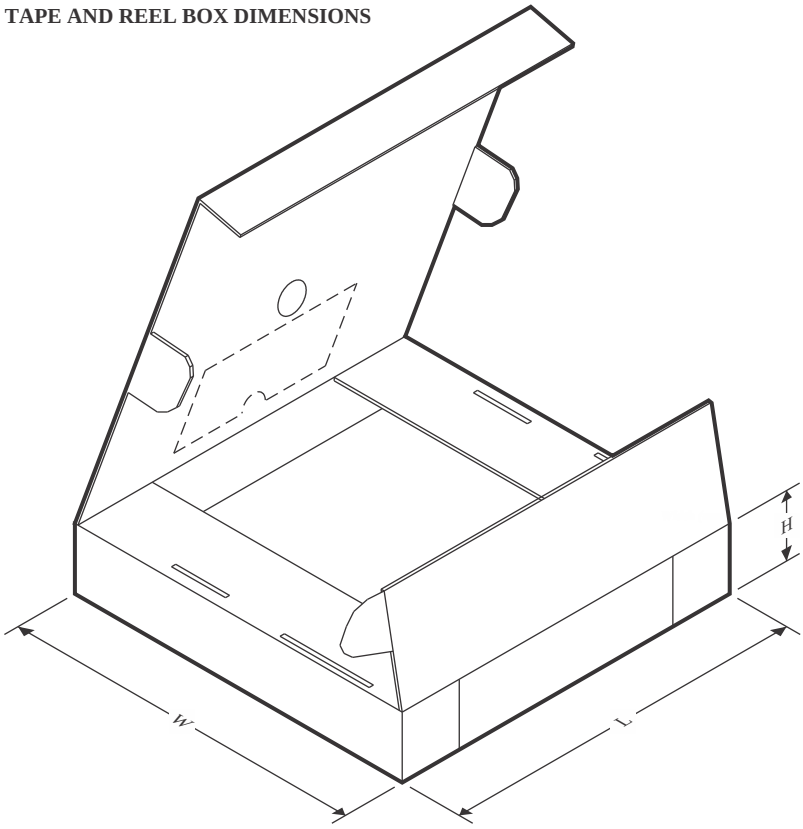

*All dimensions are nominal

Device	Package Type	Package Drawing	Pins	SPQ	Length (mm)	Width (mm)	Height (mm)
UCC21225ANPLR	VLGA	NPL	13	3000	350.0	350.0	43.0

TRAY

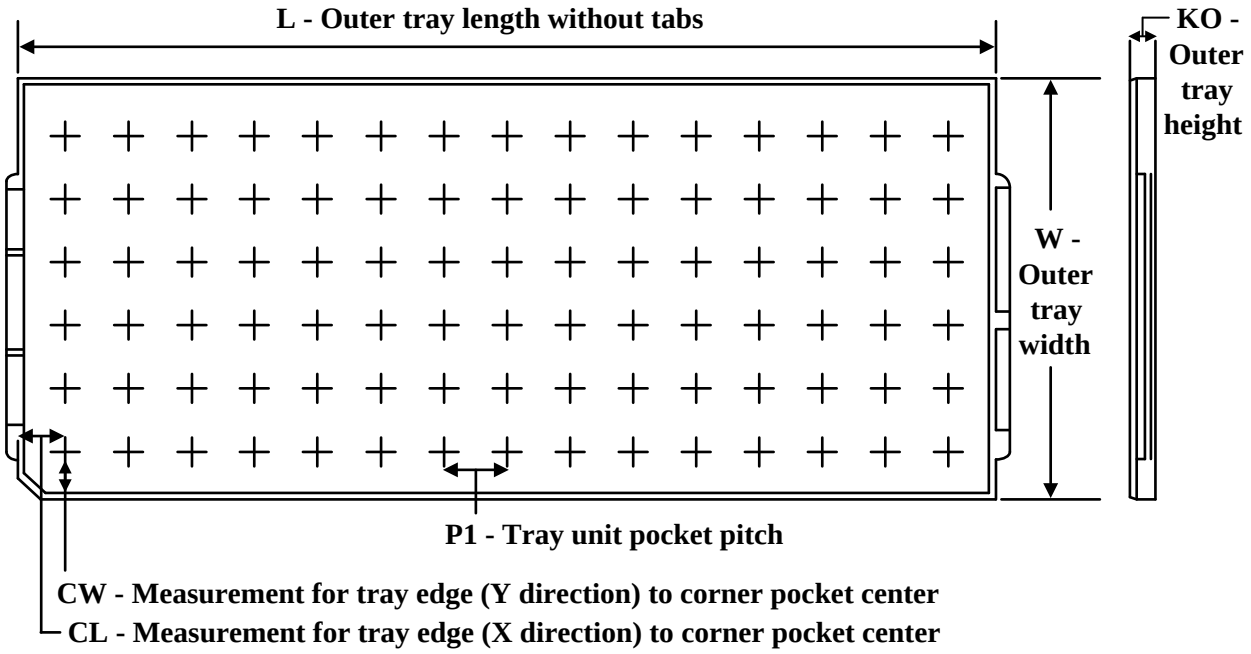

Chamfer on Tray corner indicates Pin 1 orientation of packed units.

*All dimensions are nominal

Device	Package Name	Package Type	Pins	SPQ	Unit array matrix	Max temperature (°C)	L (mm)	W (mm)	K0 (µm)	P1 (mm)	CL (mm)	CW (mm)
UCC21225ANPLR	NPL	VLGA	13	3000	14 x 35	150	315	135.9	7620	8.8	7.9	8.15
UCC21225ANPLR.A	NPL	VLGA	13	3000	14 x 35	150	315	135.9	7620	8.8	7.9	8.15

NPL0013A

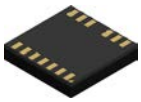

PACKAGE OUTLINE

VLGA - 1 max height

LAND GRID ARRAY

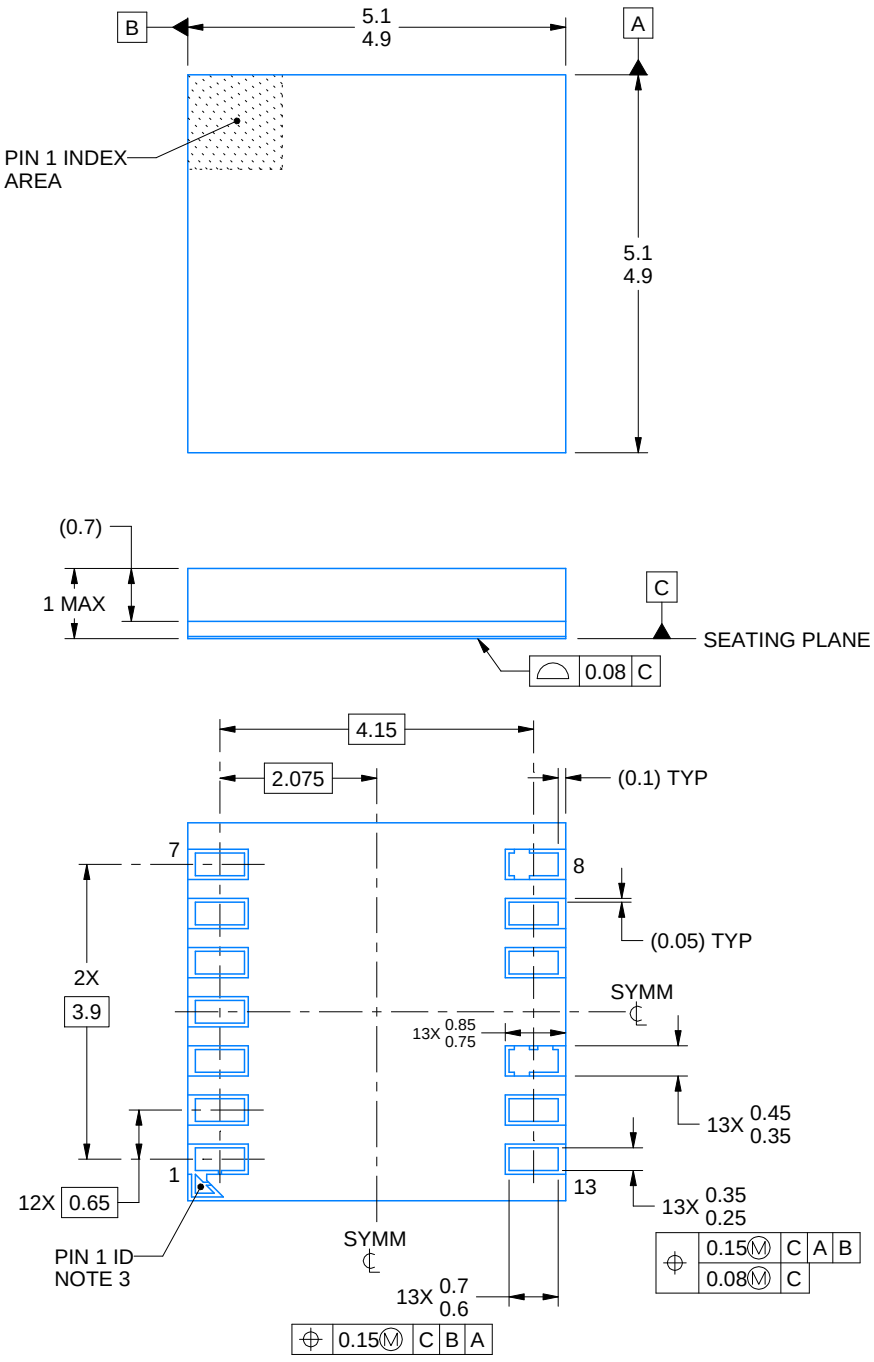

4222800/C 08/2024

NOTES:

1. All linear dimensions are in millimeters. Any dimensions in parenthesis are for reference only. Dimensioning and tolerancing per ASME Y14.5M.
2. This drawing is subject to change without notice.
3. Pin 1 indicator is electrically connected to pin 1.

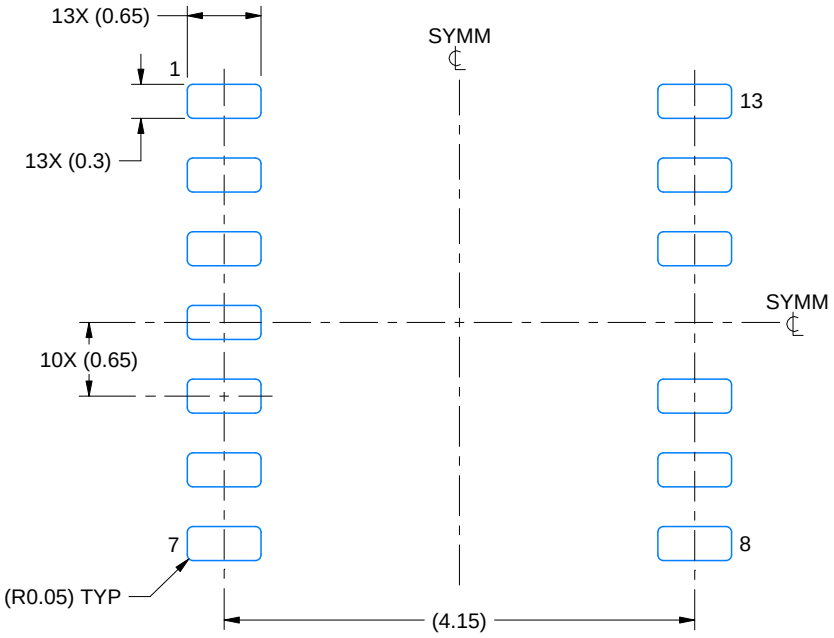

LAND PATTERN EXAMPLE
1:1 RATIO WITH PACKAGE SOLDER PADS
SCALE:15X

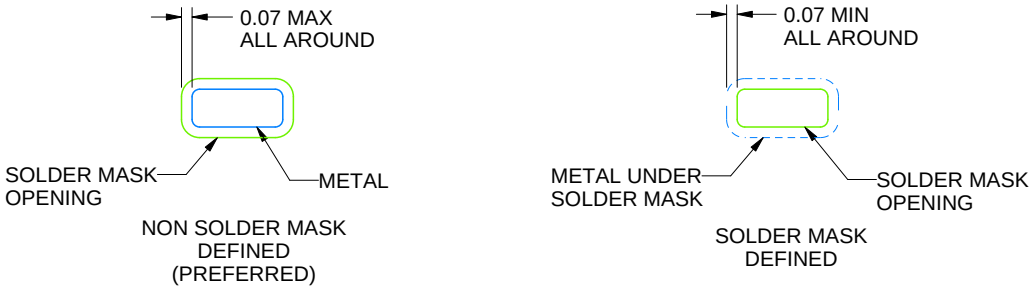

SOLDER MASK DETAILS
NOT TO SCALE

4222800/C 08/2024

NOTES: (continued)

4. For more information, see Texas Instruments literature number SLUA271 (www.ti.com/lit/slua271).

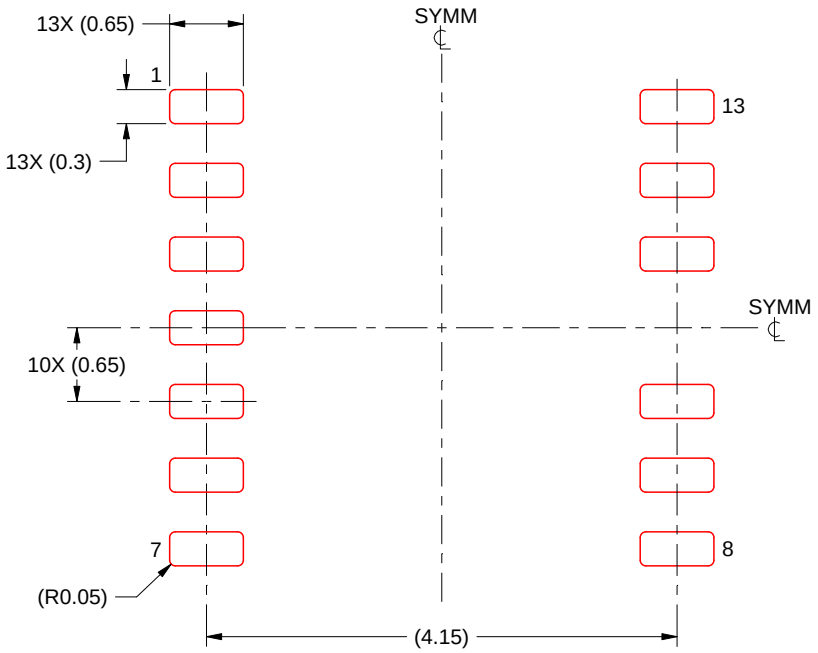

SOLDER PASTE EXAMPLE
BASED ON 0.125 THICK STENCIL
SCALE:15X

4222800/C 08/2024

NOTES: (continued)

5. Laser cutting apertures with trapezoidal walls and rounded corners may offer better paste release. IPC-7525 may have alternate design recommendations.

IMPORTANT NOTICE AND DISCLAIMER

TI PROVIDES TECHNICAL AND RELIABILITY DATA (INCLUDING DATASHEETS), DESIGN RESOURCES (INCLUDING REFERENCE DESIGNS), APPLICATION OR OTHER DESIGN ADVICE, WEB TOOLS, SAFETY INFORMATION, AND OTHER RESOURCES “AS IS” AND WITH ALL FAULTS, AND DISCLAIMS ALL WARRANTIES, EXPRESS AND IMPLIED, INCLUDING WITHOUT LIMITATION ANY IMPLIED WARRANTIES OF MERCHANTABILITY, FITNESS FOR A PARTICULAR PURPOSE OR NON-INFRINGEMENT OF THIRD PARTY INTELLECTUAL PROPERTY RIGHTS.

These resources are intended for skilled developers designing with TI products. You are solely responsible for (1) selecting the appropriate TI products for your application, (2) designing, validating and testing your application, and (3) ensuring your application meets applicable standards, and any other safety, security, regulatory or other requirements.

These resources are subject to change without notice. TI grants you permission to use these resources only for development of an application that uses the TI products described in the resource. Other reproduction and display of these resources is prohibited. No license is granted to any other TI intellectual property right or to any third party intellectual property right. TI disclaims responsibility for, and you fully indemnify TI and its representatives against any claims, damages, costs, losses, and liabilities arising out of your use of these resources.

TI’s products are provided subject to TI’s Terms of Sale, TI’s General Quality Guidelines, or other applicable terms available either on ti.com or provided in conjunction with such TI products. TI’s provision of these resources does not expand or otherwise alter TI’s applicable warranties or warranty disclaimers for TI products. Unless TI explicitly designates a product as custom or customer-specified, TI products are standard, catalog, general purpose devices.

TI objects to and rejects any additional or different terms you may propose.

Copyright © 2026, Texas Instruments Incorporated

Last updated 10/2025