EVM User's Guide: AFE10004EVM

AFE10004 Evaluation Module

Description

The AFE10004EVM is an easy-to-use platform to evaluate the functionality and performance of the AFE10004 device. The AFE10004EVM has optional circuits and jumpers to configure the device for different applications. The EVM comes with an FT4232 installed to facilitate easy SPI and I^2C communication between the EVM and the GUI. The AFE10004 comes installed on the EVM.

Get Started

1. Order the EVM.
2. Configure EVM jumpers.
3. Install the AFE10004EVM-FTDI-GUI from the resources folder.
4. Connect the USB and external power supplies.
5. Launch the AFE10004EVM-FTDI-GUI.

Features

- Configurable circuit to evaluate the AFE10004
- Onboard VDD (5V) and VIO (1.8V or 3.3V) support using USB
- Trigger output available for synchronous measurement
- Onboard FT4232 used to easily write to DAC using the AFE10004EVM-FTDI-GUI
- External SPI and I^2C connections available

Applications

- Radar
- Electronic warfare
- Communications payload
- Defense radio
- Active antenna system mMIMO (AAS)
- Outdoor backhaul unit

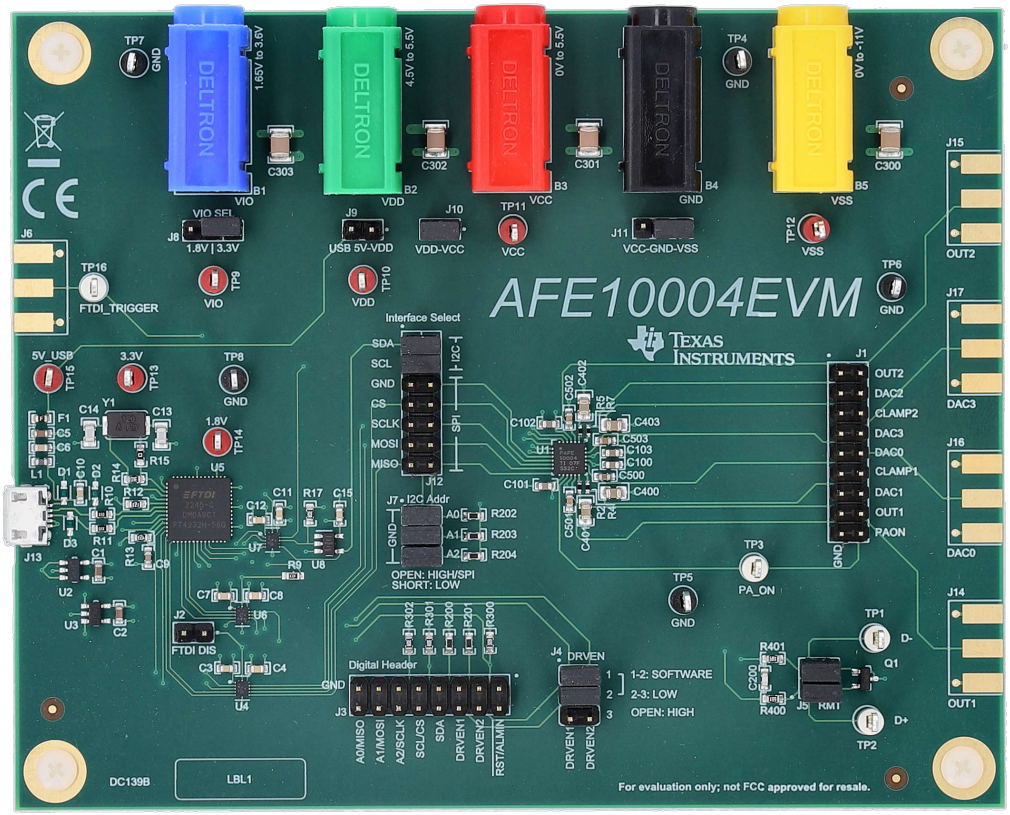

AFE10004EVM Board

Copyright © 2026 Texas Instruments Incorporated

1 Evaluation Module Overview

1.1 Introduction

This user's guide describes the characteristics, operation, and recommended use cases of the AFE10004EVM. This document provides examples and instructions on how to use the AFE10004EVM board and included software. Throughout this document, the terms evaluation board, evaluation module, and EVM are synonymous with the AFE10004EVM. This document also includes a schematic, reference printed circuit board (PCB) layouts, and a complete bill of materials (BOM).

The AFE10004EVM is connected to a personal computer (PC) using the USB cable that is supplied with the EVM. The EVM board features connectors and test points for all communication lines, DAC outputs, digital pins, and supplies. Figure 1-1 shows a block diagram of the AFE10004EVM.

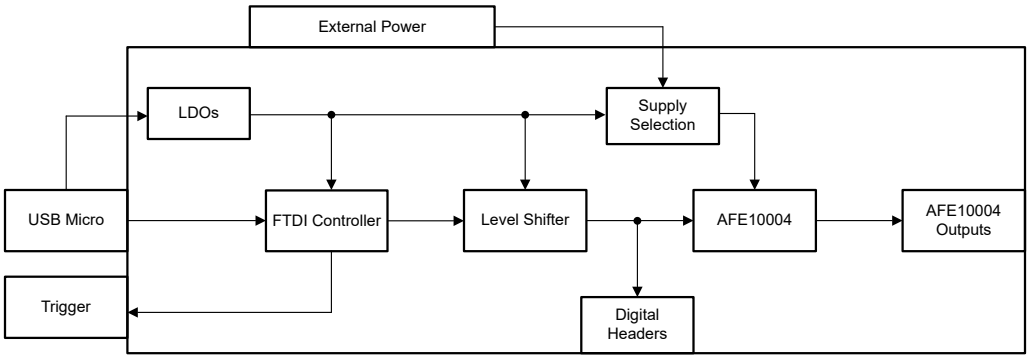

Figure 1-1. Theory of Operation Block Diagram

1.2 Kit Contents

Table 1-1 details the contents of the EVM kit. Contact the TI Product Information Center at (972) 644-5580 if any component is missing. Download the latest versions of the related software on the TI website, www.ti.com.

Table 1-1. AFE10004EVM Kit Contents

Item	Quantity
AFE10004EVM PCB evaluation board	1
USB-A to Micro-USB Cable	1

1.3 Specification

The EVM is intended to provide basic functional evaluation of the device. The layout is not intended to be a model for the target circuit, nor laid out for electromagnetic compatibility (EMC) testing. The EVM consists of a printed-circuit board (PCB), which has the AFE10004 installed.

1.4 Device Information

The AFE10004 is a highly integrated, autonomous, PA precision AFE that includes four temperature compensation DACs, integrated EEPROM, and gate bias switches. The four DACs are programmed by four independent, user-defined, temperature-to-voltage transfer functions stored in the internal EEPROM, allowing any temperature effects to be corrected without additional external circuitry. After start-up, the device operates without intervention from a system controller to provide a complete system for setting and compensating bias voltages in control applications.

The AFE10004 has four gate bias outputs that are switched on and off through dedicated control pins. The gate bias switches are designed for fast response. In combination with the device PA_ON pin, this fast response enables correct power sequencing and protection of depletion-mode transistors, such as GaAs and GaN.

The function integration and wide operating temperature range make the AFE10004 an excellent choice as an all-in-one, autonomous bias control circuit for the power amplifiers found in RF systems. The flexible DAC output ranges and built-in sequencing features let the device be used as a biasing controller for a large variety of transistor technologies, such as LDMOS, GaAs, and GaN.

Copyright © 2026 Texas Instruments Incorporated

2 Hardware

This section describes the overall system for the EVM. A PC runs software that communicates with the FTDI controller using I^2C. The USB connection optionally provides some of the low-current supplies. Supply the high-current supplies externally.

2.1 Power Requirements

The AFE10004 has four power rails: VIO, VDD, VCC, and VSS. Configure the supplies correctly for proper operation of the EVM. The USB connection provides the 5V supply to the EVM. Voltage regulators generate 3.3V and 1.8V from the USB 5V supply. These 3.3V and 1.8V supplies power the FT4232 controller.

To use the onboard 5V supply with the AFE10004EVM VDD supply, short jumper J9. By default, VDD is connected to the onboard 5V supply. Alternatively, supply VDD externally through banana jack B2. Remove the jumper connector on J9 before connecting an external supply to VDD.

To use the onboard 3.3V or 1.8V supply with the AFE10004EVM VIO supply, short jumper J8. By default, VIO is connected to the onboard 3.3V supply. Alternatively, supply VIO externally through banana jack B1. Remove the jumper connector on J8 before connecting an external supply to VIO.

The AFE10004EVM VCC supply is provided through banana jack B3. Short VCC to ground with jumper J11 when the EVM is used in the negative range. Short VCC to VDD through jumper J10 if VCC is supplied by an external supply and J9 is not populated.

The AFE10004EVM VSS supply is provided through banana jack B5. Short VSS to ground with jumper J11 when the EVM is used in the positive range.

Copyright © 2026 Texas Instruments Incorporated

2.1.1 Configuring the EVM for a Positive Output Range

Figure 2-1 shows the AFE10004EVM configured for positive output-range operation.

In this mode, use an external supply to source VDD and VCC, with J10 (VDD-VCC) shunted to allow for minimal wiring.

Jumper J11 (VCC-GND-VSS) is shunted in the 2-3 position to connect VSS to GND.

Do not connect J9 (USB 5V-VDD) in this configuration. At start-up, the AFE10004 VCC supply consumes extra current to charge the large capacitors on the DAC and CLAMP outputs. The USB port cannot source this current.

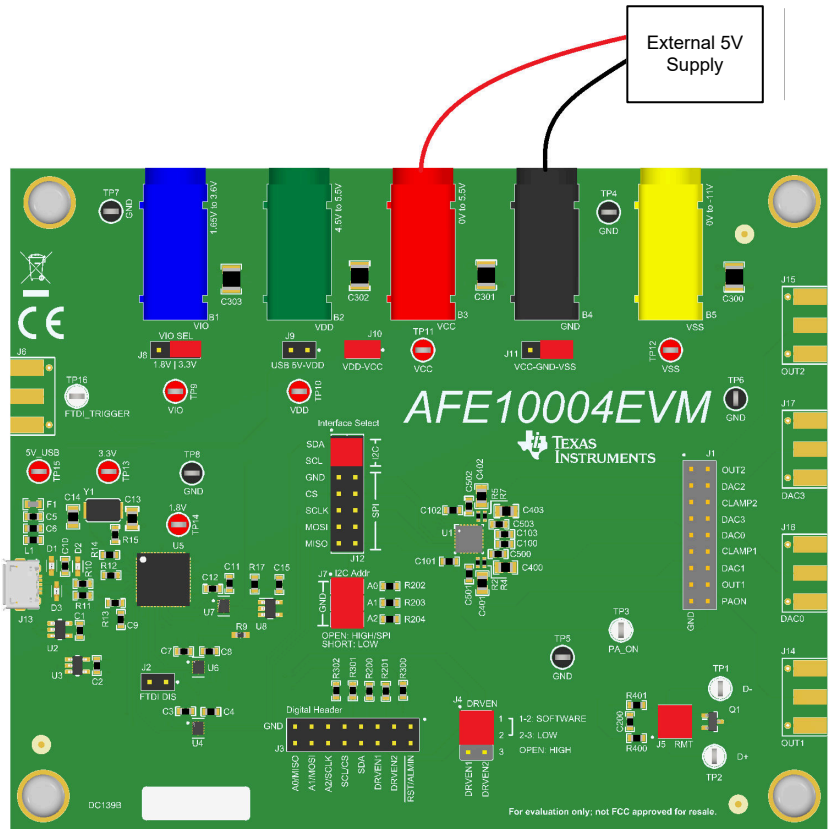

Figure 2-1. AFE10004EVM Configuration for a Positive Output Range

Copyright © 2026 Texas Instruments Incorporated

2.1.2 Configuring the EVM for a Negative Output Range

Figure 2-2 shows the AFE10004EVM configured for negative output-range operation.

Jumper J10 (VDD-VCC) is unpopulated because VCC is required to be at 0V and VDD requires 5V to be supplied.

Jumper J9 (USB 5V-VDD) is shunted to allow the USB to provide the 5V for VDD. To source VDD externally, remove this jumper.

Jumper J11 (VCC-GND-VSS) is populated in the 1-2 position, grounding the VCC supply.

The USB supplies the required current for the isolated VDD supply.

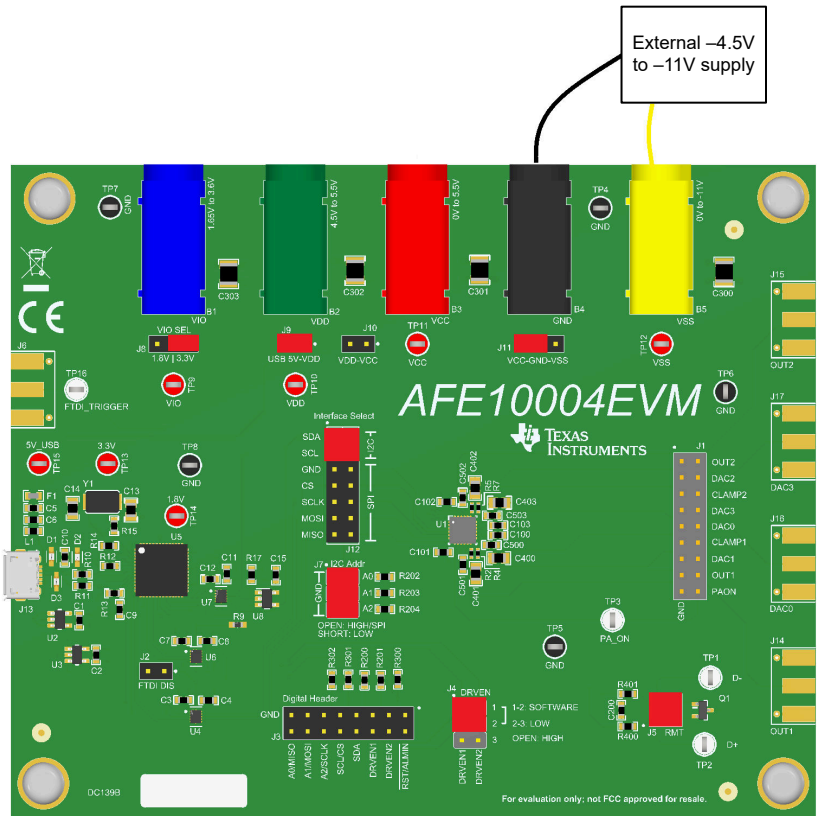

Figure 2-2. AFE10004EVM Configuration for the Negative Output Range

Copyright © 2026 Texas Instruments Incorporated

2.2 Header Information

Table 2-1 defines the AFE10004EVM output header J1.

Table 2-1. Output Header J1

Pin	Definition
2	OUT2
4	DAC2
6	CLAMP2
8	DAC3
10	DAC0
12	CLAMP1
14	DAC1
16	OUT1
18	PA_ON
1, 3, 5, 7, 9, 11, 13, 15, 17	GND

Table 2-2 defines the AFE10004EVM digital header J3.

Table 2-2. Digital Header J3

Pin	Definition
2	$\overline{\text{RESET/ALARMIN}}$
4	DRVEN2
6	DRVEN1
8	SDA
10	SCL
12	A2/SCLK
14	A1/PICO
16	A0/POCI
1, 3, 5, 7, 9, 11, 13, 15	GND

Table 2-3 shows the power connector definitions of the AFE10004EVM.

Table 2-3. Power Connector Definitions

Designator	Definition
J1	USB connector
B1	AFE10004 VIO supply (1.65V to 3.6V)
B2	AFE10004 VDD supply (4.5V to 5.5V)
B3	AFE10004 VCC supply (0V to 5.5V)
B4	AFE10004 Ground
B5	AFE10004 VSS supply (0V to –11V)

Table 2-4 shows the output connector definitions of the AFE10004EVM.

Table 2-4. Output Connector Definitions

Designator	Definition
J6	SMA connector for FT4232 trigger output (unpopulated)
J14	SMA connector for AFE10004 OUT1 (unpopulated)
J15	SMA connector for AFE10004 OUT2 (unpopulated)
J16	SMA connector for AFE10004 DAC0 (unpopulated)
J17	SMA connector for AFE10004 DAC3 (unpopulated)

Copyright © 2026 Texas Instruments Incorporated

2.3 Jumper Information

Table 2-5 shows the AFE10004EVM jumper definitions. Figure 2-3 shows the default jumper connections on the board.

Table 2-5. Jumper Definitions

Designator	PCB Description	Positions
J2	FTDI DIS	**SHORT**: Disconnects the AFE10004 from the FTDI driver. **OPEN**: The FTDI driver is connected to the AFE10004 (default).
J4	DRVEN	**SHORT 1-2**: The corresponding DRVENx pin of the AFE10004 is controlled by the AFE10004EVM software (default) **SHORT 2-3**: The corresponding DRVENx pin is tied to GND. **OPEN**: The corresponding DRVENx pin is pulled high.
J5	RMT	**SHORT**: Onboard transistor Q1 is connected to the AFE10004 remote temperature sensor (default) **OPEN**: D+ and D– pins of the AFE10004 are disconnected from the onboard diode. TP_D+ and TP_D– are used to connect an external diode.
J7	I2C ADDR	**SHORT**: The corresponding address pin of the device is pulled low. See Table 2-6 for I^2C address configurations (default) **OPEN**: The corresponding address pin of the device is pulled high. Leave open in SPI mode.
J8	VIO SEL	**SHORT 1-2**: VIO is connected to the on-board 3.3V voltage regulator (default) **SHORT 2-3** VIO is connected to the on-board 1.8V voltage regulator. **OPEN**: VIO is not powered by on-board supplies.
J9	USB 5V-VDD	**SHORT**: VDD is connected to the 5V USB power (default) **OPEN**: VDD is not powered by on-board supplies.
J10	VDD-VCC	**SHORT**: VDD and VCC are connected together. This configuration allows for a single supply to source both, and is useful when operating the AFE10004 in the positive output range. **OPEN**: VDD and VCC are isolated (default)
J11	VCC-GND-VSS	**SHORT 1-2**: VCC and GND are shorted together. This configuration is useful when operating the device in the negative output range. **SHORT 2-3**: GND and VSS are shorted together. This configuration is useful when operating the device in the positive supply range (default)

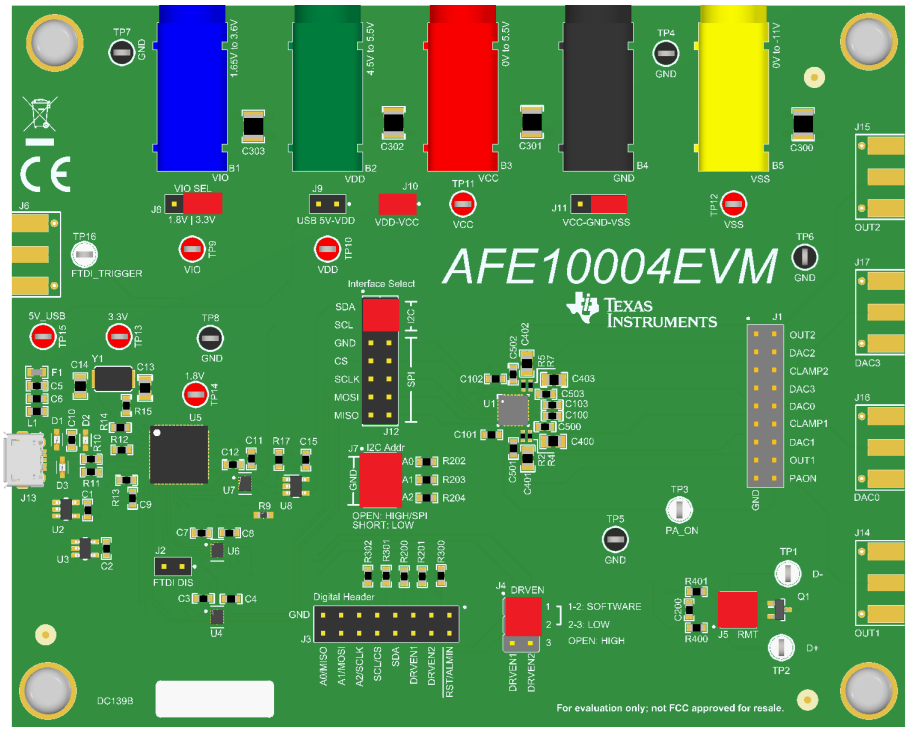

Figure 2-3. AFE10004EVM Default Jumper Settings

Copyright © 2026 Texas Instruments Incorporated

2.4 Interfaces

The AFE10004EVM uses the FT4232 controller to interface between the AFE10004 and the EVM GUI. To connect the FT4232 digital controller on the EVM board to the computer, align and firmly connect the USB connector to the J1 connector. Verify the connection is snug; a loose connection potentially causes intermittent operation. A 100 mil header (J3) is available for external communication. Table 2-2 lists the J3 pin definitions. To use external communication, close jumper J1 to disable the connection to the FT4232 controller.

2.4.1 SPI Configuration

Figure 2-4 shows the AFE10004EVM configured for SPI communication.

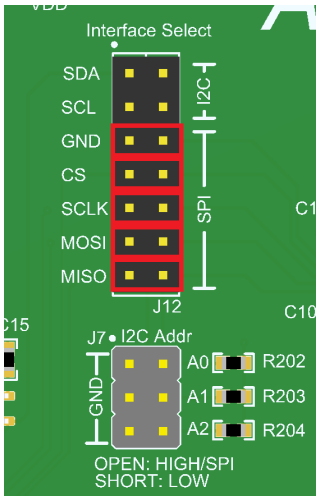

Figure 2-4. SPI Jumper Configuration

Copyright © 2026 Texas Instruments Incorporated

2.4.2 I²C Configuration

Figure 2-5 shows the AFE10004EVM configured for I²C communication.

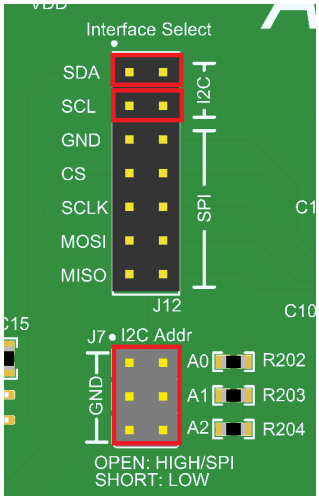

Figure 2-5. I²C Jumper Configuration

The jumper connections on J7 determine the device address of the AFE10004. Table 2-6 shows all of the possible jumper configurations and the respective device address.

Table 2-6. I²C Address Configuration

A2	A1	A0	[A6:A0]
GND	GND	GND	100 0000
GND	GND	VIO	100 0001
GND	VIO	GND	100 0010
GND	VIO	VIO	100 0011
VIO	GND	GND	100 0100
VIO	GND	VIO	100 0101
VIO	VIO	GND	100 0110
VIO	VIO	VIO	100 0111

Copyright © 2026 Texas Instruments Incorporated

2.5 Test Points

Table 2-7 defines the AFE10004EVM test points.

Table 2-7. Test Point Definitions

Designator	Net	Definition
TP1	D-	AFE10004 D+
TP2	D+	AFE10004 D-
TP3	PA_ON	AFE10004 PA_ON
TP4, TP5, TP6, TP7, TP8	GND	Ground test points
TP9	VIO	AFE10004 VIO
TP10	VDD	AFE10004 VDD
TP11	VCC	AFE10004 VCC
TP12	VSS	AFE10004 VSS
TP13	3.3V	Onboard 3.3V supply
TP14	1.8V	Onboard 1.8V supply
TP15	USB_5V	USB 5V supply
TP16	FTDI_TRIGGER	Trigger from the FTDI

Copyright © 2026 Texas Instruments Incorporated

3 Software

3.1 Software Installation

Download the latest version of the EVM GUI installer from the AFE10004 secure resources folder on TI.com. Run the installer to install the software, and copy the required LabVIEW™ software files and drivers to the PC.

When the AFE10004EVM GUI installer launches, an dialog window appears to select an installation directory. If left unchanged, the software location defaults to *C:\Program Files (x86)\Texas Instruments\AFE10004EVM-FTDI-GUI*. Figure 3-1 shows the default path.

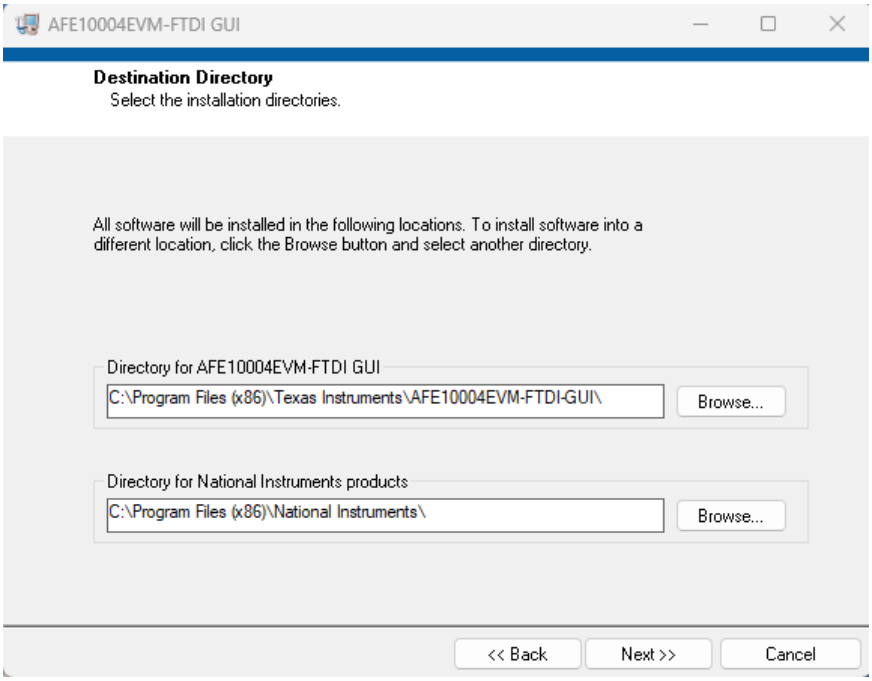

Figure 3-1. Software Installation Path

The EVM software also installs the Future Technology Devices International Limited (FTDI) USB drivers using a separate executable file. Figure 3-2 shows the FTDI USB drivers installation window that launches after the AFE10004EVM software installation completes.

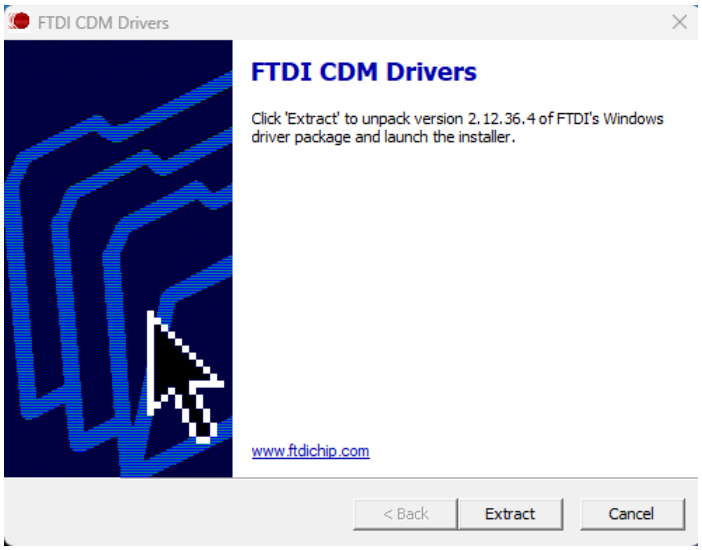

Figure 3-2. FTDI USB Drivers

Copyright © 2026 Texas Instruments Incorporated

3.2 Software Description

The AFE10004EVM GUI allows for I^{2}C or SPI communication to the AFE10004 and control of the DRVENx pins. While the entire register map is available to the user, some features have been abstracted into user controls in the *High-Level Configuration* page for easy operation.

3.2.1 Launching the Software

Launch the AFE10004EVM software by searching for AFE10004EVM GUI in the Windows® *Start* menu.

When the GUI is launched, the *AFE10004 SPI OR I2C* menu, shown in Figure 3-3, appears. Choose between SPI and I^{2}C and click *CONFIRM*.

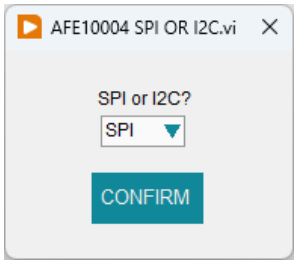

Figure 3-3. AFE10004EVM SPI or I2C Menu

Figure 3-4 shows the GUI after launch. If the FTDI controller is not connected to the PC when the software is launched, the GUI defaults to *demo* mode. The bottom-left corner of the GUI shows the hardware connection status, DEMO MODE or CONNECTED, as shown in Figure 3-5. After the FTDI controller is properly connected to the PC, uncheck the *Demo Mode* box in the upper right to initialize the GUI.

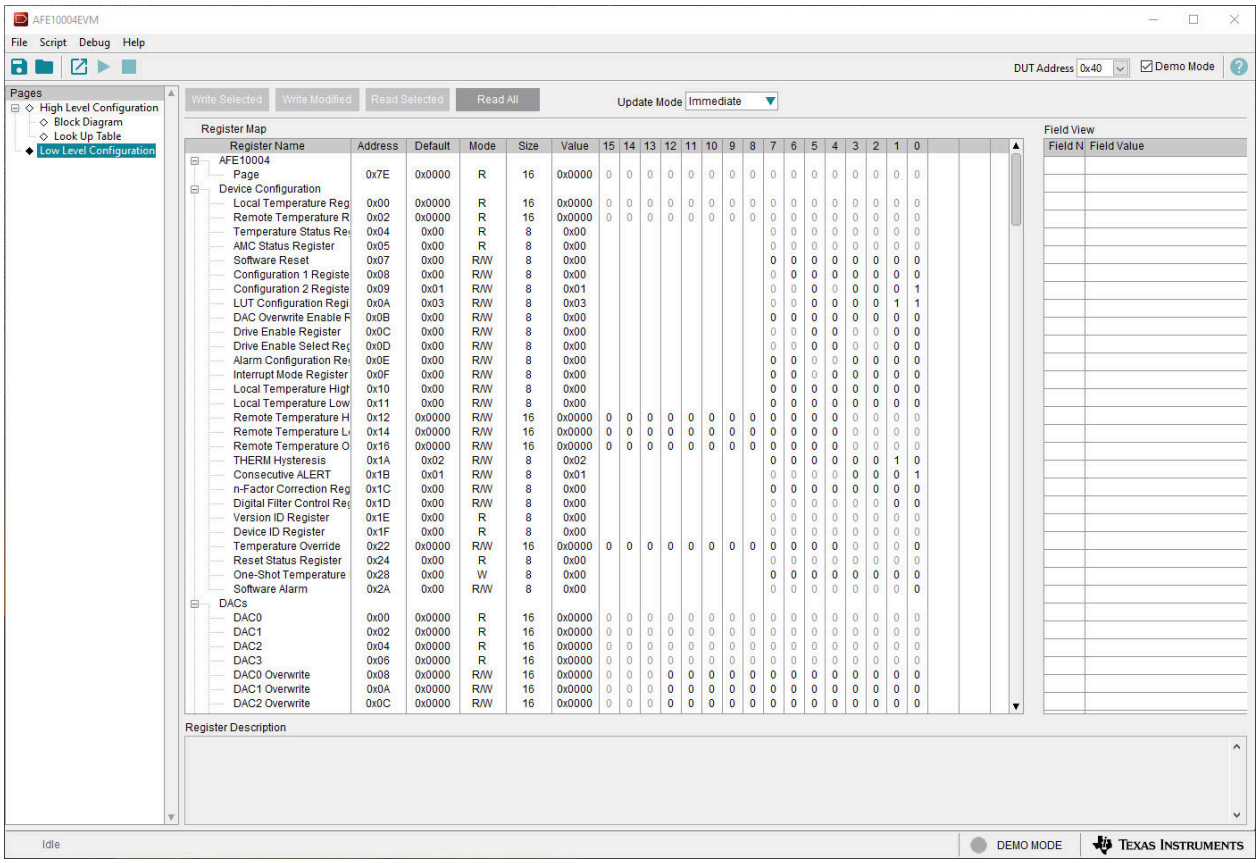

Figure 3-4. AFE10004EVM GUI at Launch

Copyright © 2026 Texas Instruments Incorporated

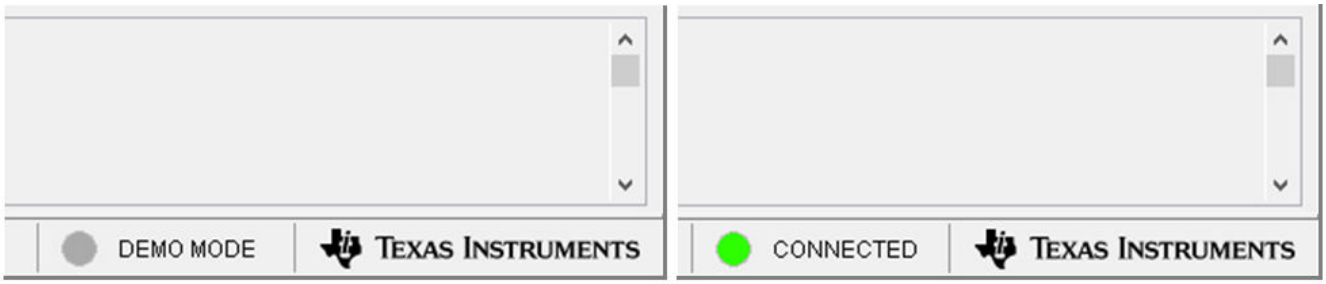

Figure 3-5. FTDI Controller Connection Status

After you uncheck the *Demo Mode* box, the *Interface Configuration* menu pops up. Figure 3-6 shows the two possible menus. The menu depends on the *SPI OR I2C* selection. The interface menus configure the SPI or I^{2}C speed and I^{2}C device address.

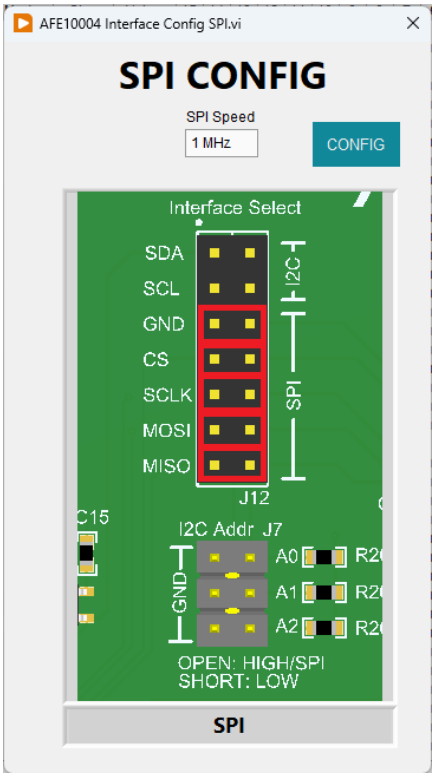

Figure 3-6. AFE10004EVM SPI Configuration Menu

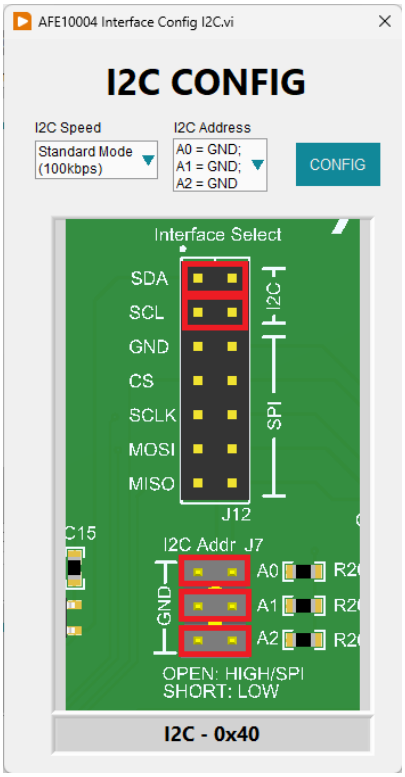

Figure 3-7. AFE10004EVM I^{2}C Interface Configuration Menu

3.2.2 Low Level Configuration Page

The AFE10004 register map is different for I^{2}C and SPI. Figure 3-8 shows the I^{2}C *Low Level Configuration* page of the AFE10004EVM GUI. Figure 3-9 shows the SPI *Low Level Configuration* page of the AFE10004EVM GUI. This page allows direct access to all register on the AFE10004. The GUI handles page address management, allowing seamless access to registers.

The *Register Map* section in the center of the page lists all the registers, grouped by the pages in the device. Directly above the *Register Map* section are four buttons that allow read and write access to all registers.

The *Field View* section on the right side of the page shows the various fields in the currently selected register. Select a field to highlight the each field is described in the device datasheet. Data is written to the registers by entering a hex value into the Value column of the register map. To set individual bits to 1 and 0, click them.

Copyright © 2026 Texas Instruments Incorporated

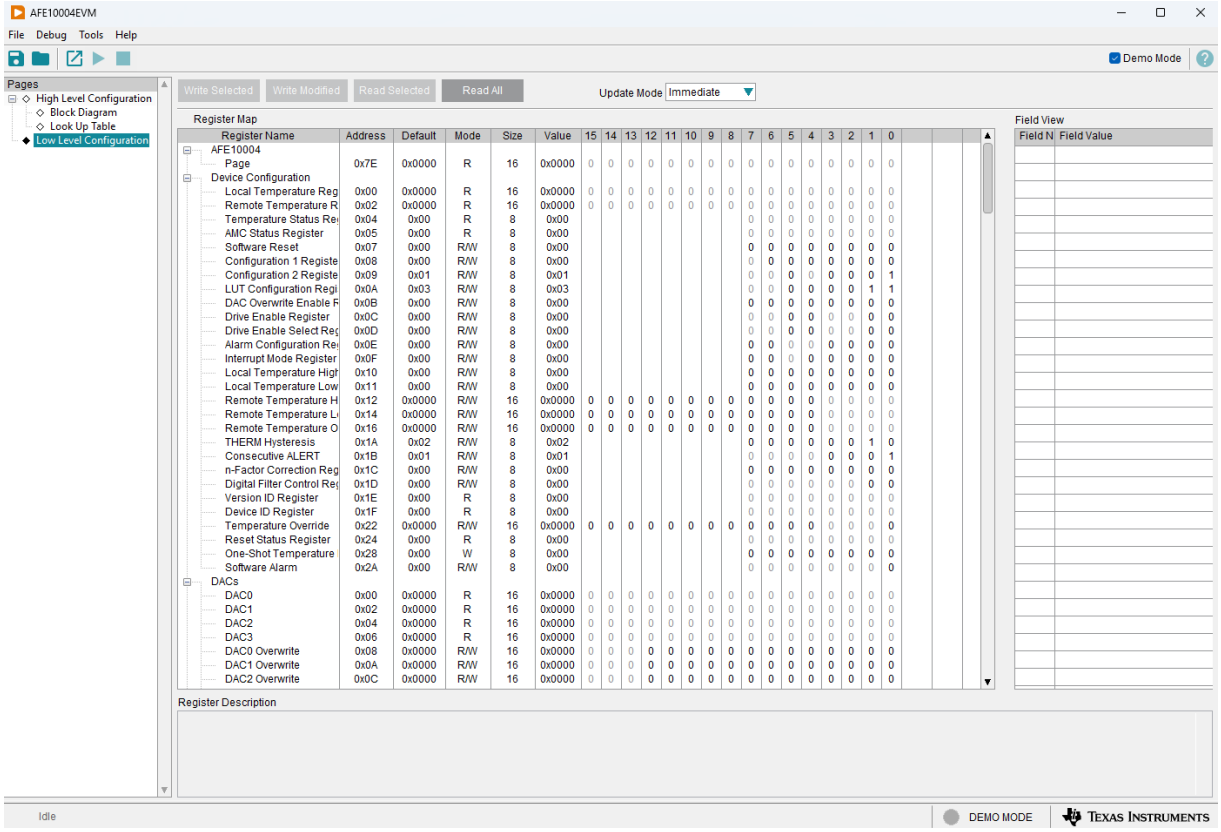

Figure 3-8. AFE10004EVM I²C Low Level Configuration Page

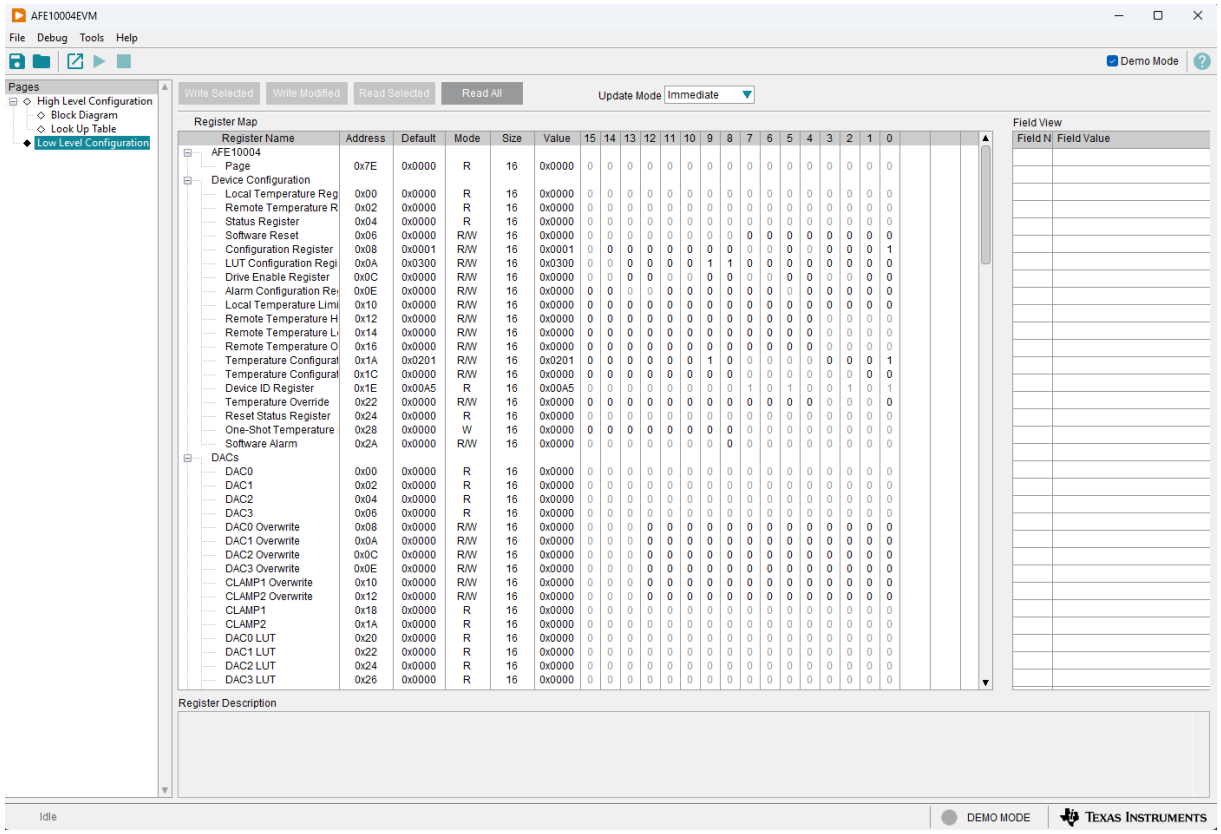

Figure 3-9. AFE10004EVM SPI Low Level Configuration Page

Copyright © 2026 Texas Instruments Incorporated

3.2.3 Block Diagram Page

Figure 3-10 shows the *Block Diagram* page of the AFE10004EVM GUI. When accessing this page, the *LUT Status* indicator shows if the device is currently in *look up table* mode. This page allows the user to toggle the DRVENx pins, override the DAC outputs, and read the current temperature and DAC value.

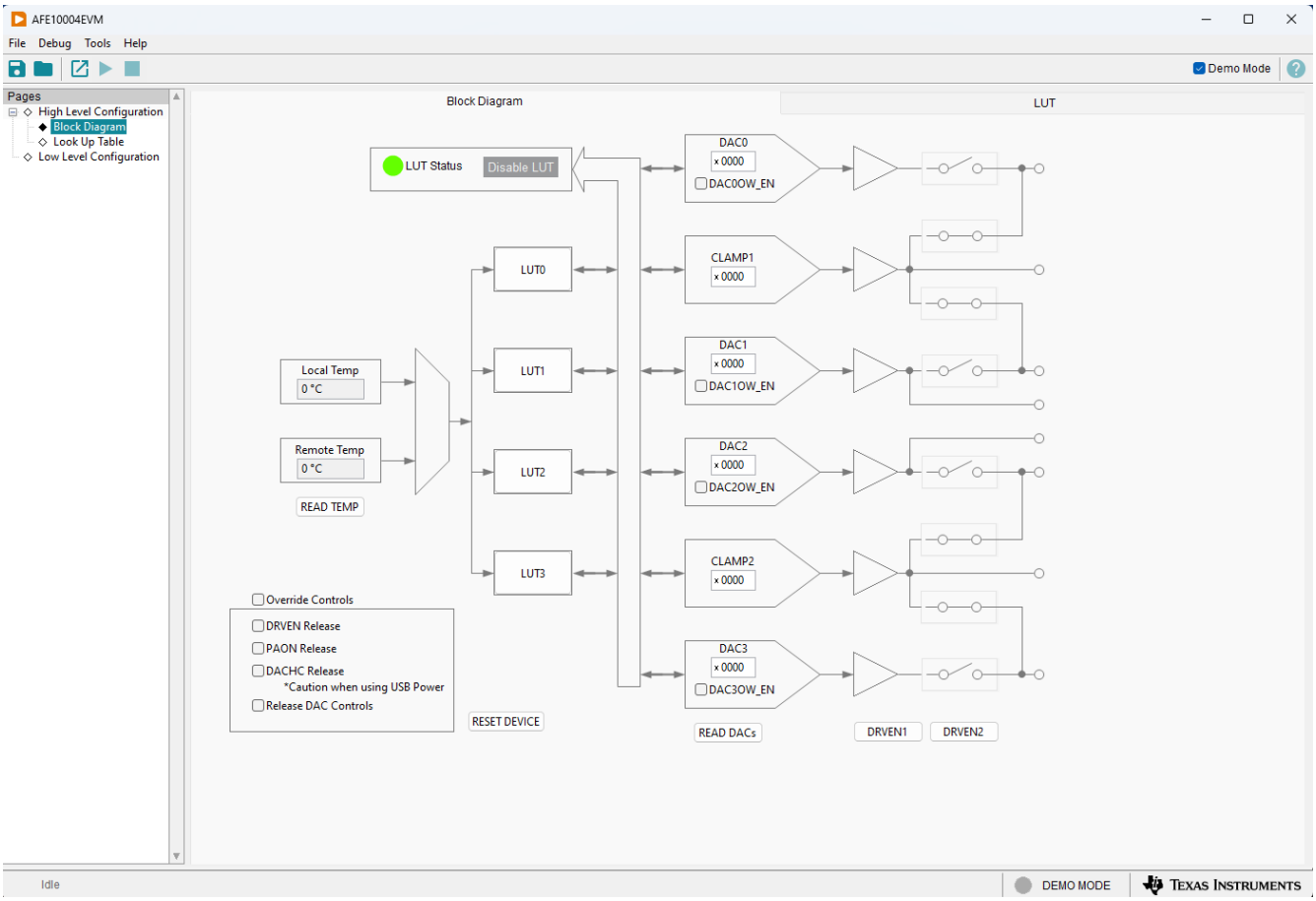

Figure 3-10. Block Diagram Page

Copyright © 2026 Texas Instruments Incorporated

3.2.4 Look Up Table Page

Figure 3-11 shows the *Look Up Table* page of the AFE10004EVM GUI. This page allows interaction with the four look-up tables in the AFE10004 device. Be aware that while the device is in LUT operation, the AFE10004 does not allow the controller access to the nonvolatile memory. The **Disable LUT** button stops LUT operation, and enables most features of the page. The GUI retrieves the table values for the currently selected DAC. The user is able to set the baseline, transfer function polarity, transfer function values, clamp values, and corresponding sensors for the LUT.

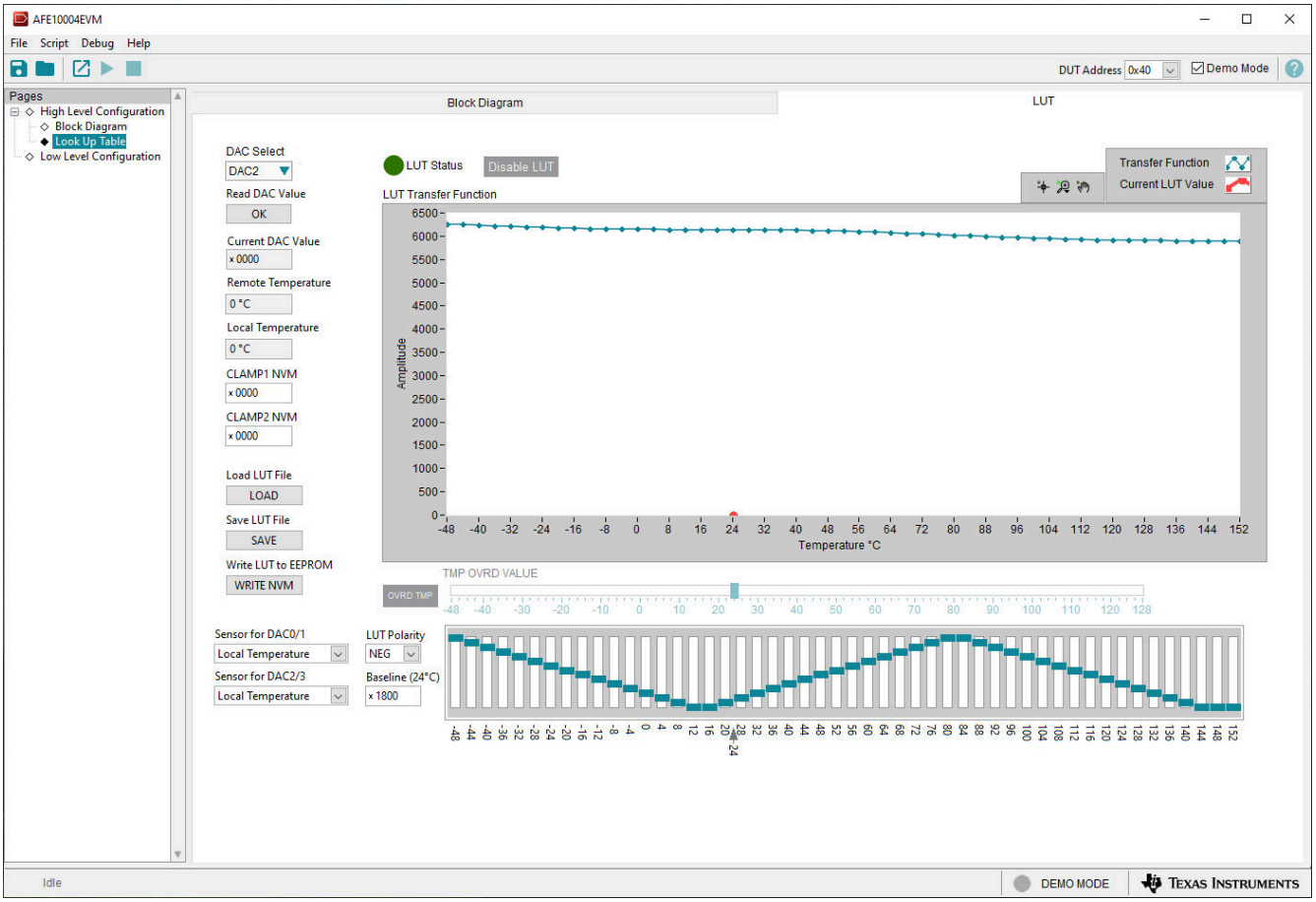

Figure 3-11. Look Up Table Page

Copyright © 2026 Texas Instruments Incorporated

Figure 3-12 shows the *LUT Transfer Function* graph of the GUI. This transfer function is calculated based on the values of the look-up table. To exercise the transfer function (and the respective DAC output), enable the override temperature (OVRD TMP) feature of the device. Press the **OVRD TMP** button of the GUI to override the temperature sensor value with the user input. To manually sweep the temperature, use the **TMP OVRD VALUE** slider.

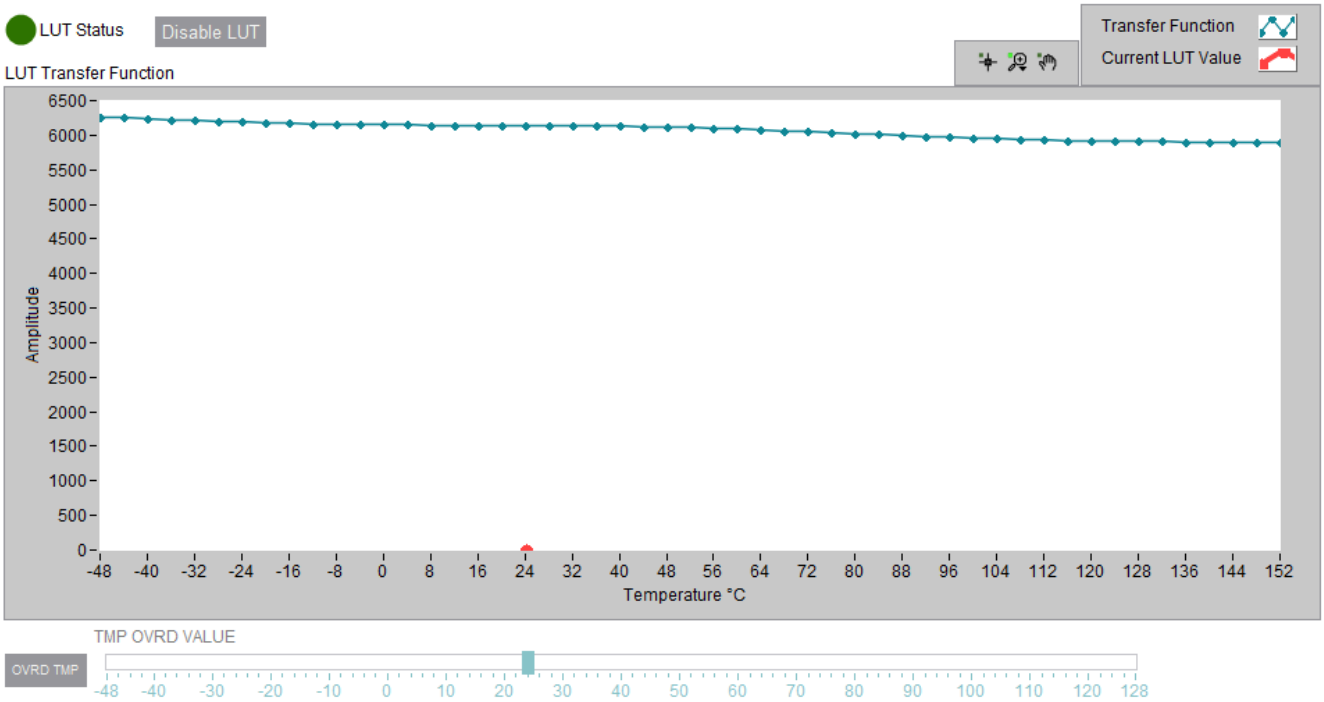

Figure 3-12. LUT Transfer Function and Temperature Override

Copyright © 2026 Texas Instruments Incorporated

3.2.4.1 Loading and Saving LUT Files

Use the AFE10004EVM software to load and save transfer functions with csv files. When loading, the values are written to all four LUT tables, but not to the nonvolatile memory. After the function is selected, use the **Write LUT to EEPROM** button to write to user memory.

An example LUT file is available in the installation directory of the AFE10004EVM (typically, *C:\Program Files (x86)\Texas Instruments\AFE10004EVM-FTDI-GUI\LUT Files*). Figure 3-13 shows the required format.

	A	B	C	D	E
1	Channel	DAC0	DAC1	DAC2	DAC3
2	Baseline	2048	4096	6144	4096
3	Polarity	NEGATIVE	POSITIVE	NEGATIVE	POSITIVE
4	DELTAn48	13	15	15	1
5	DELTAn44	0	15	14	2
6	DELTAn40	11	0	13	3
7	DELTAn36	0	14	12	4
8	DELTAn32	0	0	11	5
9	DELTAn28	0	0	10	6
10	DELTAn24	0	12	9	7
11	DELTAn20	0	9	8	8
12	DELTAn16	8	10	7	9
13	DELTAn12	0	9	6	10
14	DELTAn8	6	8	5	11
15	DELTAn4	0	0	4	12
16	DELTAp0	5	9	3	13
17	DELTAp4	0	9	2	14
18	DELTAp8	4	0	1	15
19	DELTAp12	0	0	0	14
20	DELTAp16	4	8	0	13
21	DELTAp20	0	7	1	12
22	DELTAp28	3	4	2	11
23	DELTAp32	3	4	3	10
24	DELTAp36	0	7	4	9
25	DELTAp40	0	0	5	8
26	DELTAp44	0	0	6	7

Figure 3-13. LUT CSV File Required Format

Copyright © 2026 Texas Instruments Incorporated

4 Hardware Design Files

4.1 Schematics

Figure 4-1 through Figure 4-3 show the AFE10004EVM schematics.

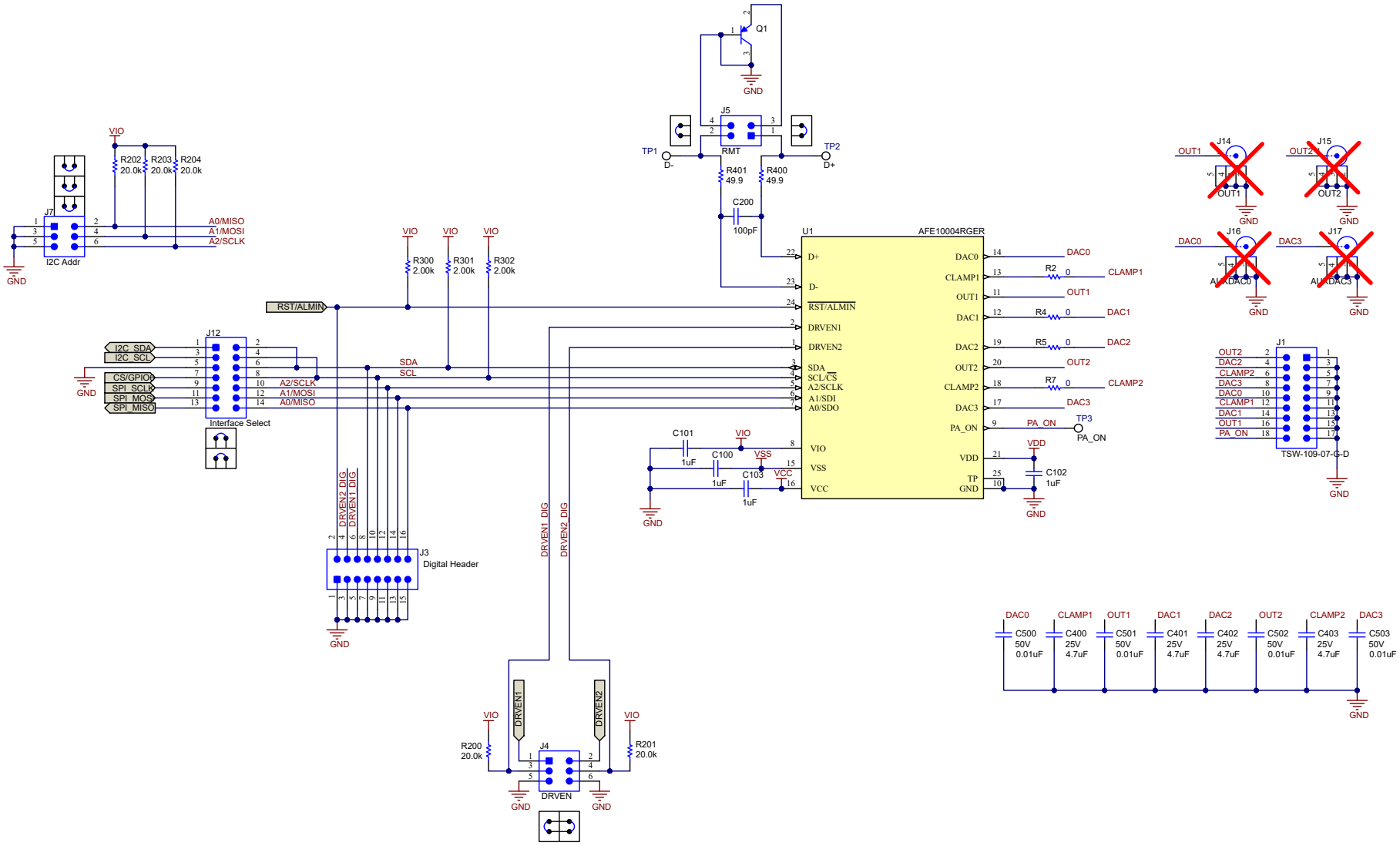

Figure 4-1. AFE10004EVM DUT Schematic

Copyright © 2026 Texas Instruments Incorporated

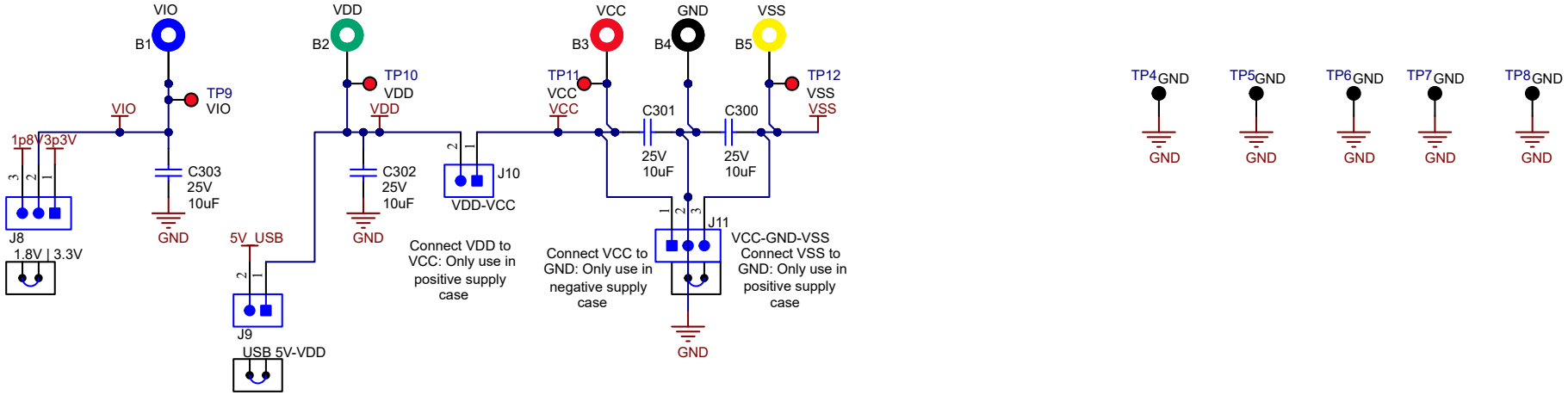

Figure 4-2. AFE10004EVM Power Schematic

Copyright © 2026 Texas Instruments Incorporated

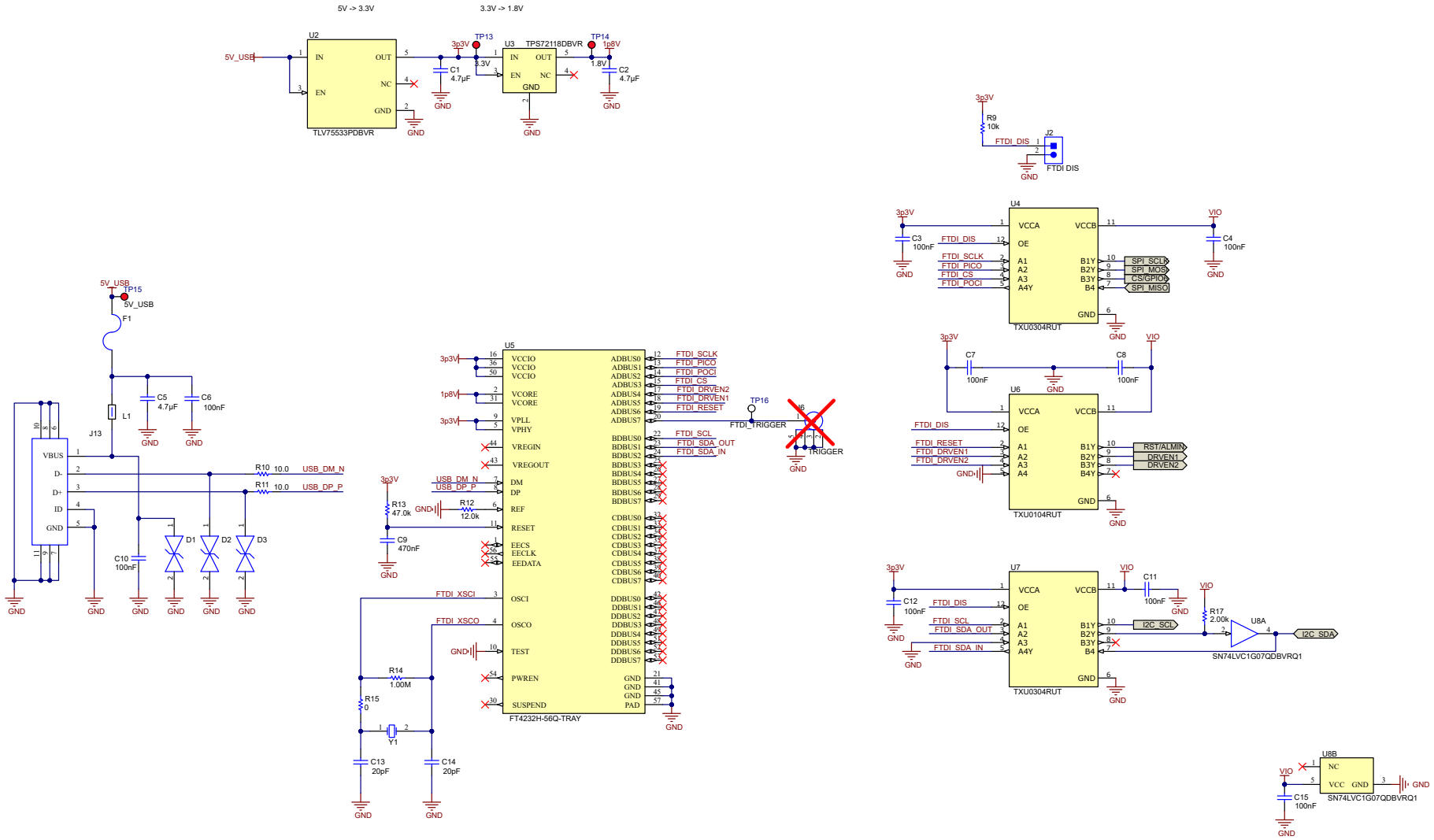

Figure 4-3. AFE10004EVM FTDI Interface Schematic

Copyright © 2026 Texas Instruments Incorporated

4.2 PCB Layouts

Figure 4-4 through Figure 4-7 show the AFE10004EVM board layout.

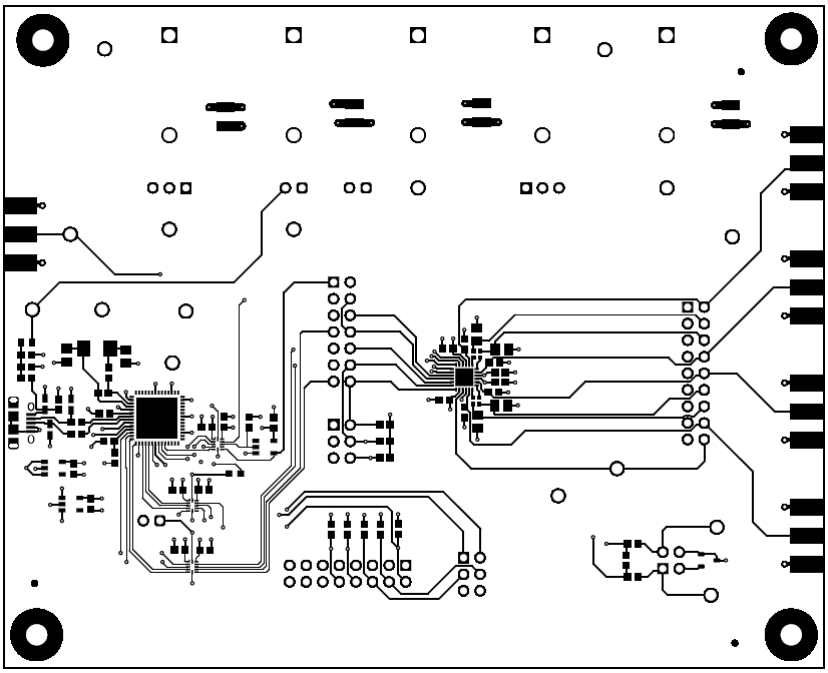

Figure 4-4. AFE10004EVM PCB Top Layer Layout

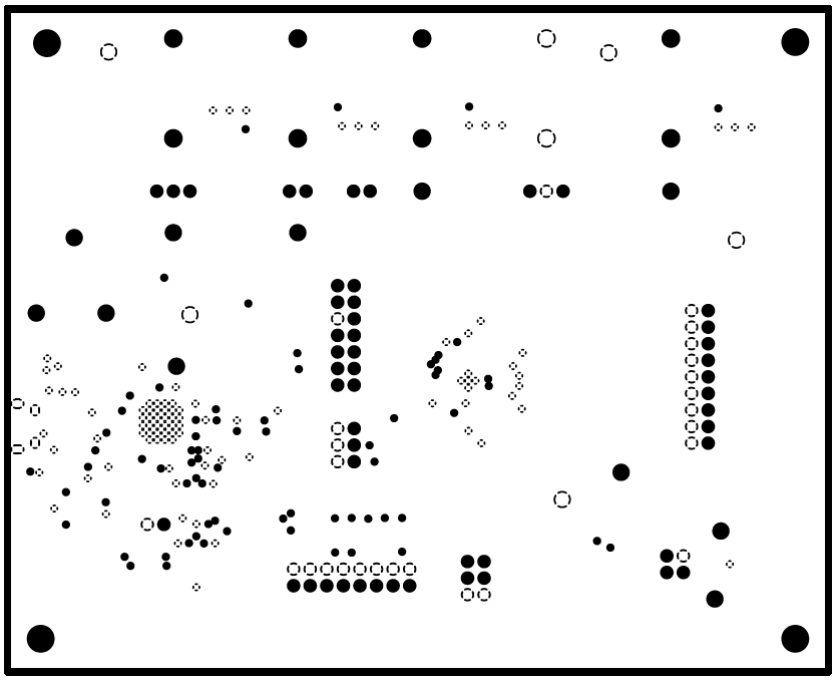

Figure 4-5. AFE10004EVM PCBMid Layer 1 Layout (Ground Plane)

Copyright © 2026 Texas Instruments Incorporated

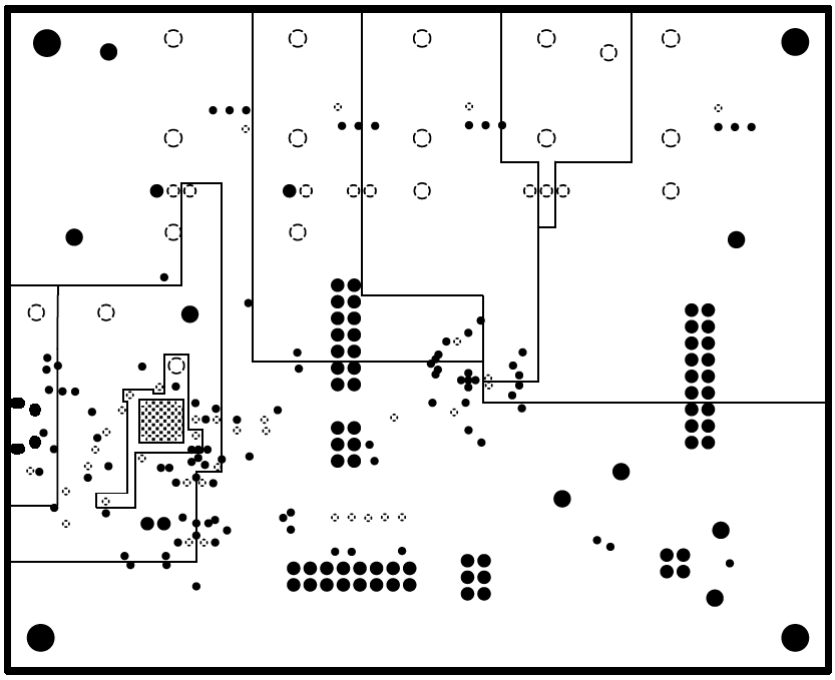

Figure 4-6. AFE10004EVM PCB Mid Layer 2 Layout (Power Plane)

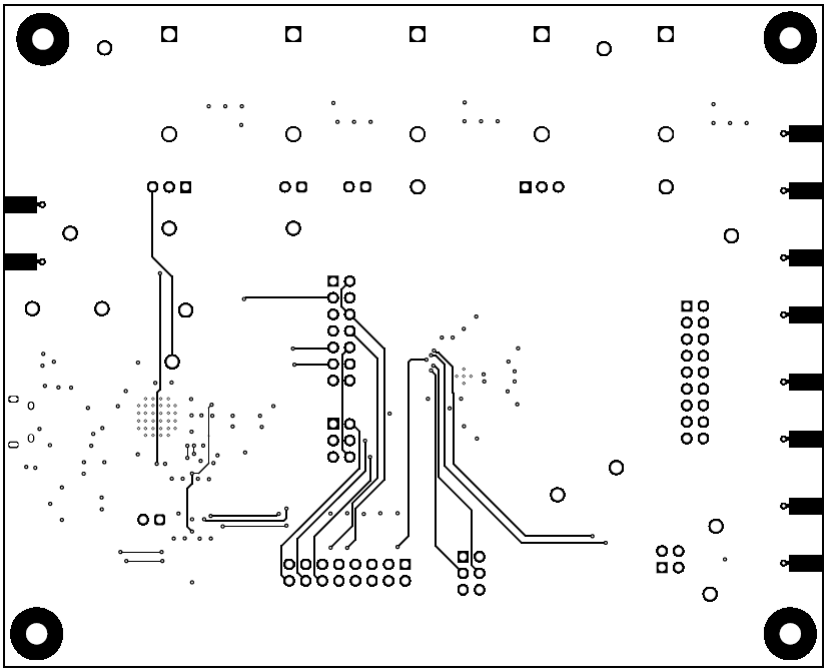

Figure 4-7. AFE10004EVM PCB Bottom Layer Layout

Copyright © 2026 Texas Instruments Incorporated

4.3 Bill of Materials (BOM)

Table 4-1. AFE10004EVM BOM

Designator	Quantity	Value	Description	Package Reference	Part Number	Manufacturer
B1	1		Standard Banana Jack, insulated, 10A, blue	571-0200	571-0200	DEM Manufacturing
B2	1		Standard Banana Jack, insulated, 10A, green	571-0400	571-0400	DEM Manufacturing
B3	1		Standard Banana Jack, insulated, 10A, red	571-0500	571-0500	DEM Manufacturing
B4	1		Standard Banana Jack, insulated, 10A, black	571-0100	571-0100	DEM Manufacturing
B5	1		Standard Banana Jack, insulated, 10A, yellow	571-0700	571-0700	DEM Manufacturing
C1, C2, C5	3	4.7µF	CAP, CERM, 4.7µF, 16V,± 10%, X7R, 0603	0603	GRM188Z71C475KE21D	MuRata
C3, C4, C6, C7, C8, C10, C11, C12, C15	9	0.1µF	CAP, CERM, 0.1µF, 50V,± 10%, X7R, AEC-Q200 Grade 0, 0603	0603	06035C104K4Z4A	AVX
C9	1	0.47µF	CAP, CERM, 0.47µF, 25V, ± 10%, X7R, 0603	0603	GRM188R71E474KA12D	MuRata™
C13, C14	2	20pF	CAP, CERM, 20pF, 100V, ± 5%, C0G/NP0, 0805	0805	08051A200JAT2A	AVX
C100, C101, C102, C103	4	1µF	CAP, CERM, 1µF, 50V, ± 10%, X7R, 0603	0603	UMK107AB7105KA-T	Taiyo Yuden®
C200	1	100pF	CAP, CERM, 100pF, 10V, ± 10%, X7R, 0603	0603	0603ZC101KAT2A	AVX
C300, C301, C302, C303	4	10µF	CAP, CERM, 10µF, 25V, ± 10%, X7R, 1210	1210	GRM32DR71E106KA12L	MuRata
C400, C401, C402, C403	4	4.7µF	CAP, CERM, 4.7µF, 25V, ± 10%, X5R, 0805	0805	C0805C475K3PACTU	Kemet
C500, C501, C502, C503	4	0.01µF	CAP, CERM, 0.01µF, 50V, ± 5%, X7R, 0603	0603	C0603C103J5RACTU	Kemet®
D1, D2, D3	3		150V (Typ) Clamp Ipp Tvs Diode Surface Mount 0603 (1608 Metric)	0603	PGB1010603MRHF	Littelfuse™ Inc.
F1	1		Fuse, 0.5A, 50VDC, SMD	0603	SF-0603F050-2	Bourns
H1, H2, H3, H4	4		Machine Screw, Round, #4-40 × 1/4, Nylon, Philips pan head	Screw	NY PMS 440 0025 PH	B&F Fastener Supply
H5, H6, H7, H8	4		Standoff, Hex, 0.5"L #4-40 Nylon	Standoff	1902C	Keystone
J1	1		Header, 100mil, 9x2, Gold, TH	9x2 Header	TSW-109-07-G-D	Samtec
J2, J9, J10	3		Header, 100mil, 2x1, Gold, TH	2x1 Header	TSW-102-07-G-S	Samtec®
J3	1		Header, 100mil, 8x2, Gold, TH	8x2 Header	TSW-108-07-G-D	Samtec
J4, J7	2		Header, 100mil, 3x2, Gold, TH	Sullins 100mil, 2x3, 230 mil above insulator	PBC03DAAN	Sullins Connector Solutions™
J5	1		Header, 100mil, 2x2, Gold, TH	2x2 Header	TSW-102-07-G-D	Samtec
J8, J11	2		Header, 100mil, 3x1, Gold, TH	PBC03SAAN	PBC03SAAN	Sullins Connector Solutions
J12	1		Header, 100mil, 7x2, Gold, TH	7x2 Header	TSW-107-07-G-D	Samtec
J13	1		Receptacle, USB 2.0, Micro-USB Type B, R/A, SMT	Micro-USB B USB 2.0, 0.65mm, 5 Pos, R/A, SMT	10118194-0001LF	FCI
L1	1	600Ω	Ferrite Bead, 600Ω at 100MHz, 1A, 0603	0603	782633601	Wurth Elektronik
LBL1	1		Thermal Transfer Printable Labels, 0.650" W × 0.200" H - 10,000 per roll	PCB Label 0.650 × 0.200 inch	THT-14-423-10	Brady
Q1	1	40V	Transistor, PNP, 40V, 0.2A, SOT-23	SOT-23	MMBT3906-7-F	Diodes Inc.
R2, R4, R5, R7	4	0Ω	RES, 0Ω, 5%, 0.063W, 0402	0402	RC0402JR-070RL	Yageo America

Copyright © 2026 Texas Instruments Incorporated

Table 4-1. AFE10004EVM BOM (continued)

Designator	Quantity	Value	Description	Package Reference	Part Number	Manufacturer
R9	1	10kΩ	10kΩ ±0.1% 0.1W, 1/10W Chip Resistor 0603 (1608 Metric) Current Sense Thin Film	0603	CRT0603-BY-1002ELF	Bourns Inc.
R10, R11	2	10Ω	RES, 10Ω, 1%, 0.1W, 0603	0603	RC0603FR-0710RL	Yageo
R12	1	12kΩ	RES, 12kΩ, 1%, 0.1W, 0603	0603	RC0603FR-0712KL	Yageo
R13	1	47kΩ	RES, 47kΩ, 1%, 0.1W, 0603	0603	RC0603FR-0747KL	Yageo
R14	1	1MΩ	RES, 1MΩ, 1%, 0.1W, AEC-Q200 Grade 0, 0603	0603	RMCF0603FG1M00	Stackpole Electronics Inc
R15	1	0Ω	RES, 0Ω, 5%, 0.1W, 0603	0603	RC0603JR-070RL	Yageo
R17, R300, R301, R302	4	2kΩ	RES, 2kΩ, 1%, 0.1 W, 0603	0603	RC0603FR-072KL	Yageo America
R200, R201, R202, R203, R204	5	20kΩ	RES, 20kΩ, 1%, 0.1W, 0603	0603	RC0603FR-0720KL	Yageo America
R400, R401	2	49.9Ω	RES, 49.9Ω, 1%, 0.1W, 0603	0603	RC0603FR-0749R9L	Yageo America
SH1, SH3, SH4, SH5, SH6, SH7, SH8, SH9, SH10, SH11, SH12, SH13	12		Shunt, 2.54mm, Gold, Black	Shunt, 2.54mm, Black	60900213421	Wurth Elektronik
TP1, TP2, TP3, TP16	4		Test Point, Multipurpose, White, TH	White Multipurpose Test point	5012	Keystone
TP4, TP5, TP6, TP7, TP8	5		Test Point, Multipurpose, Black, TH	Black Multipurpose Test point	5011	Keystone Electronics
TP9, TP10, TP11, TP12, TP13, TP14, TP15	7		Test Point, Multipurpose, Red, TH	Red Multipurpose Test point	5010	Keystone Electronics
U1	1		Four-channel, Temperature Compensation DACs with Integrated EEPROM and Output Switches, RGE0024H (VQFN-24)	RGE0024H	AFE10004RGER	Texas Instruments
U2	1		500mA, Low IQ, Small Size, Low Dropout Regulator, DBV0005A (SOT-23-5)	DBV0005A	TLV75533PDBVR	Texas Instruments
U3	1		Single Output Low Input Voltage Requirement LDO, 150mA, Fixed 1.8V Output, 1.8V to 5.5V Input, with Low IQ, 5-pin SOT-23 (DBV), –40 to 125°C, Green (RoHS and no Sb/Br)	DBV0005A	TPS72118DBVR	Texas Instruments
U4, U7	2		Automotive 4-Bit Fixed Direction Voltage-Level Translator with Schmitt-Trigger Inputs, and Tri-State Outputs	UQFN12	TXU0304RUT	Texas Instruments
U5	1		Future Technology Devices International Ltd FT4232H Quad High Speed USB to Multipurpose UART/MPSSE IC, VQFN-56	VQFN-56	FT4232H-56Q-TRAY	FTDI
U6	1		4-Bit Fixed Direction Voltage-Level Translator with Schmitt-Trigger Inputs, and Tri-state Outputs	UQFN12	TXU0104RUT	Texas Instruments
U8	1		Automotive Catalog Single Buffer/Driver With Open-Drain Output, DBV0005A (SOT-23-5)	DBV0005A	SN74LVC1G07QDBVRQ1	Texas Instruments
Y1	1		Crystal, 12MHz, 18pF, SMD	ABM3	ABM3-12.000MHZ-B2-T	Abracon Corporation
J6, J14, J15, J16, J17	0		Connector, End launch SMA, 50 ohm, SMT	End Launch SMA	142-0701-801	Cinch Connectivity

Copyright © 2026 Texas Instruments Incorporated

5 Additional Information

5.1 Electrostatic Discharge Caution

Many of the components on the AFE10004EVM are susceptible to damage by electrostatic discharge (ESD). Customers are advised to observe proper ESD handling precautions when unpacking and handling the EVM, including the use of a grounded wrist strap at an approved ESD workstation.

5.2 Trademarks

LabVIEW™ is a trademark of National Instruments.
MuRata™ is a trademark of Murata Manufacturing Co., Ltd..
Littelfuse™ is a trademark of Littelfuse, Inc.
Sullins Connector Solutions™ is a trademark of Sullins Electronics Corporation.
Windows® is a registered trademark of Microsoft Corporation.
Taiyo Yuden® is a registered trademark of Taiyo Yuden Co., Ltd..
Kemet® is a registered trademark of KEMET ELECTRONICS CORPORATION.
Samtec® is a registered trademark of Samtec Inc..
All trademarks are the property of their respective owners.

6 Related Documentation

The documents in Table 6-1 provide information regarding Texas Instruments integrated circuits used in the assembly of the AFE10004EVM. This user's guide is available from the TI web site under literature number SBAU358. Any letter appended to the literature number corresponds to the document revision that is current at the time of the writing of this document. Newer revisions are available from the TI web site at www.ti.com, or call the Texas Instruments Literature Response Center at (800) 477-8924 or the Product Information Center at (972) 644-5580. When ordering, identify the document by both title and literature number.

Table 6-1. Related Device Documentation

Document	Literature Number
AFE10004 product data sheet	SBASA60

7 Revision History

NOTE: Page numbers for previous revisions may differ from page numbers in the current version.

Changes from Revision A (June 2025) to Revision B (October 2026) **Page**

- Updated U1 to AFE10004 24

Changes from Revision * (November 2020) to Revision A (June 2025) **Page**

- Updated user guide with new sections and additional information per user's guide standards 1
- Updated hardware images throughout document to the Rev B board 1
- Updated the Theory of Operation block diagram to reflect the Rev B board 2
- Added *Interfaces* 8
- Updated section 3.11 to include figures showing the new EVM software interface 12
- Updated Schematic, PCB, and BOM information 19

Copyright © 2026 Texas Instruments Incorporated

STANDARD TERMS FOR EVALUATION MODULES

1. *Delivery:* TI delivers TI evaluation boards, kits, or modules, including any accompanying demonstration software, components, and/or documentation which may be provided together or separately (collectively, an "EVM" or "EVMs") to the User ("User") in accordance with the terms set forth herein. User's acceptance of the EVM is expressly subject to the following terms.

   1.1 EVMs are intended solely for product or software developers for use in a research and development setting to facilitate feasibility evaluation, experimentation, or scientific analysis of TI semiconductors products. EVMs have no direct function and are not finished products. EVMs shall not be directly or indirectly assembled as a part or subassembly in any finished product. For clarification, any software or software tools provided with the EVM ("Software") shall not be subject to the terms and conditions set forth herein but rather shall be subject to the applicable terms that accompany such Software

   1.2 EVMs are not intended for consumer or household use. EVMs may not be sold, sublicensed, leased, rented, loaned, assigned, or otherwise distributed for commercial purposes by Users, in whole or in part, or used in any finished product or production system.

2 *Limited Warranty and Related Remedies/Disclaimers*:

   2.1 These terms do not apply to Software. The warranty, if any, for Software is covered in the applicable Software License Agreement.

   2.2 TI warrants that the TI EVM will conform to TI's published specifications for ninety (90) days after the date TI delivers such EVM to User. Notwithstanding the foregoing, TI shall not be liable for a nonconforming EVM if (a) the nonconformity was caused by neglect, misuse or mistreatment by an entity other than TI, including improper installation or testing, or for any EVMs that have been altered or modified in any way by an entity other than TI, (b) the nonconformity resulted from User's design, specifications or instructions for such EVMs or improper system design, or (c) User has not paid on time. Testing and other quality control techniques are used to the extent TI deems necessary. TI does not test all parameters of each EVM. User's claims against TI under this Section 2 are void if User fails to notify TI of any apparent defects in the EVMs within ten (10) business days after delivery, or of any hidden defects with ten (10) business days after the defect has been detected.

   2.3 TI's sole liability shall be at its option to repair or replace EVMs that fail to conform to the warranty set forth above, or credit User's account for such EVM. TI's liability under this warranty shall be limited to EVMs that are returned during the warranty period to the address designated by TI and that are determined by TI not to conform to such warranty. If TI elects to repair or replace such EVM, TI shall have a reasonable time to repair such EVM or provide replacements. Repaired EVMs shall be warranted for the remainder of the original warranty period. Replaced EVMs shall be warranted for a new full ninety (90) day warranty period.

WARNING

Evaluation Kits are intended solely for use by technically qualified, professional electronics experts who are familiar with the dangers and application risks associated with handling electrical mechanical components, systems, and subsystems.

User shall operate the Evaluation Kit within TI's recommended guidelines and any applicable legal or environmental requirements as well as reasonable and customary safeguards. Failure to set up and/or operate the Evaluation Kit within TI's recommended guidelines may result in personal injury or death or property damage. Proper set up entails following TI's instructions for electrical ratings of interface circuits such as input, output and electrical loads.

NOTE:

EXPOSURE TO ELECTROSTATIC DISCHARGE (ESD) MAY CAUSE DEGREDATION OR FAILURE OF THE EVALUATION KIT; TI RECOMMENDS STORAGE OF THE EVALUATION KIT IN A PROTECTIVE ESD BAG.

3 *Regulatory Notices:*

3.1 *United States*

3.1.1 *Notice applicable to EVMs not FCC-Approved:*

FCC NOTICE: This kit is designed to allow product developers to evaluate electronic components, circuitry, or software associated with the kit to determine whether to incorporate such items in a finished product and software developers to write software applications for use with the end product. This kit is not a finished product and when assembled may not be resold or otherwise marketed unless all required FCC equipment authorizations are first obtained. Operation is subject to the condition that this product not cause harmful interference to licensed radio stations and that this product accept harmful interference. Unless the assembled kit is designed to operate under part 15, part 18 or part 95 of this chapter, the operator of the kit must operate under the authority of an FCC license holder or must secure an experimental authorization under part 5 of this chapter.

3.1.2 *For EVMs annotated as FCC – FEDERAL COMMUNICATIONS COMMISSION Part 15 Compliant:*

CAUTION

This device complies with part 15 of the FCC Rules. Operation is subject to the following two conditions: (1) This device may not cause harmful interference, and (2) this device must accept any interference received, including interference that may cause undesired operation.

Changes or modifications not expressly approved by the party responsible for compliance could void the user's authority to operate the equipment.

FCC Interference Statement for Class A EVM devices

NOTE: This equipment has been tested and found to comply with the limits for a Class A digital device, pursuant to part 15 of the FCC Rules. These limits are designed to provide reasonable protection against harmful interference when the equipment is operated in a commercial environment. This equipment generates, uses, and can radiate radio frequency energy and, if not installed and used in accordance with the instruction manual, may cause harmful interference to radio communications. Operation of this equipment in a residential area is likely to cause harmful interference in which case the user will be required to correct the interference at his own expense.

FCC Interference Statement for Class B EVM devices

NOTE: This equipment has been tested and found to comply with the limits for a Class B digital device, pursuant to part 15 of the FCC Rules. These limits are designed to provide reasonable protection against harmful interference in a residential installation. This equipment generates, uses and can radiate radio frequency energy and, if not installed and used in accordance with the instructions, may cause harmful interference to radio communications. However, there is no guarantee that interference will not occur in a particular installation. If this equipment does cause harmful interference to radio or television reception, which can be determined by turning the equipment off and on, the user is encouraged to try to correct the interference by one or more of the following measures:

- *Reorient or relocate the receiving antenna.*
- *Increase the separation between the equipment and receiver.*
- *Connect the equipment into an outlet on a circuit different from that to which the receiver is connected.*
- *Consult the dealer or an experienced radio/TV technician for help.*

3.2 *Canada*

3.2.1 *For EVMs issued with an Industry Canada Certificate of Conformance to RSS-210 or RSS-247*

Concerning EVMs Including Radio Transmitters:

This device complies with Industry Canada license-exempt RSSs. Operation is subject to the following two conditions:

(1) this device may not cause interference, and (2) this device must accept any interference, including interference that may cause undesired operation of the device.

Concernant les EVMs avec appareils radio:

Le présent appareil est conforme aux CNR d'Industrie Canada applicables aux appareils radio exempts de licence. L'exploitation est autorisée aux deux conditions suivantes: (1) l'appareil ne doit pas produire de brouillage, et (2) l'utilisateur de l'appareil doit accepter tout brouillage radioélectrique subi, même si le brouillage est susceptible d'en compromettre le fonctionnement.

Concerning EVMs Including Detachable Antennas:

Under Industry Canada regulations, this radio transmitter may only operate using an antenna of a type and maximum (or lesser) gain approved for the transmitter by Industry Canada. To reduce potential radio interference to other users, the antenna type and its gain should be so chosen that the equivalent isotropically radiated power (e.i.r.p.) is not more than that necessary for successful communication. This radio transmitter has been approved by Industry Canada to operate with the antenna types listed in the user guide with the maximum permissible gain and required antenna impedance for each antenna type indicated. Antenna types not included in this list, having a gain greater than the maximum gain indicated for that type, are strictly prohibited for use with this device.

Concernant les EVMs avec antennes détachables

Conformément à la réglementation d'Industrie Canada, le présent émetteur radio peut fonctionner avec une antenne d'un type et d'un gain maximal (ou inférieur) approuvé pour l'émetteur par Industrie Canada. Dans le but de réduire les risques de brouillage radioélectrique à l'intention des autres utilisateurs, il faut choisir le type d'antenne et son gain de sorte que la puissance isotrope rayonnée équivalente (p.i.r.e.) ne dépasse pas l'intensité nécessaire à l'établissement d'une communication satisfaisante. Le présent émetteur radio a été approuvé par Industrie Canada pour fonctionner avec les types d'antenne énumérés dans le manuel d'usage et ayant un gain admissible maximal et l'impédance requise pour chaque type d'antenne. Les types d'antenne non inclus dans cette liste, ou dont le gain est supérieur au gain maximal indiqué, sont strictement interdits pour l'exploitation de l'émetteur

3.3 *Japan*

3.3.1 *Notice for EVMs delivered in Japan:* Please see http://www.tij.co.jp/lsds/ti_ja/general/eStore/notice_01.page 日本国内に輸入される評価用キット、ボードについては、次のところをご覧ください。

https://www.ti.com/ja-jp/legal/notice-for-evaluation-kits-delivered-in-japan.html

3.3.2 *Notice for Users of EVMs Considered "Radio Frequency Products" in Japan:* EVMs entering Japan may not be certified by TI as conforming to Technical Regulations of Radio Law of Japan.

If User uses EVMs in Japan, not certified to Technical Regulations of Radio Law of Japan, User is required to follow the instructions set forth by Radio Law of Japan, which includes, but is not limited to, the instructions below with respect to EVMs (which for the avoidance of doubt are stated strictly for convenience and should be verified by User):

1. Use EVMs in a shielded room or any other test facility as defined in the notification #173 issued by Ministry of Internal Affairs and Communications on March 28, 2006, based on Sub-section 1.1 of Article 6 of the Ministry's Rule for Enforcement of Radio Law of Japan,
2. Use EVMs only after User obtains the license of Test Radio Station as provided in Radio Law of Japan with respect to EVMs, or
3. Use of EVMs only after User obtains the Technical Regulations Conformity Certification as provided in Radio Law of Japan with respect to EVMs. Also, do not transfer EVMs, unless User gives the same notice above to the transferee. Please note that if User does not follow the instructions above, User will be subject to penalties of Radio Law of Japan.

【無線電波を送信する製品の開発キットをお使いになる際の注意事項】 開発キットの中には技術基準適合証明を受けていないものがあります。 技術適合証明を受けていないもののご使用に際しては、電波法遵守のため、以下のいずれかの措置を取っていただく必要がありますのでご注意ください。

1. 電波法施行規則第6条第1項第1号に基づく平成18年3月28日総務省告示第173号で定められた電波暗室等の試験設備でご使用いただく。
2. 実験局の免許を取得後ご使用いただく。
3. 技術基準適合証明を取得後ご使用いただく。

なお、本製品は、上記の「ご使用にあたっての注意」を譲渡先、移転先に通知しない限り、譲渡、移転できないものとします。

上記を遵守頂けない場合は、電波法の罰則が適用される可能性があることをご留意ください。 日本テキサス· インスツルメンツ株式会社

東京都新宿区西新宿６丁目２４番１号

西新宿三井ビル

3.3.3 *Notice for EVMs for Power Line Communication:* Please see http://www.tij.co.jp/lsds/ti_ja/general/eStore/notice_02.page 電力線搬送波通信についての開発キットをお使いになる際の注意事項については、次のところをご覧ください。https://www.ti.com/ja-jp/legal/notice-for-evaluation-kits-for-power-line-communication.html

3.4 *European Union*

3.4.1 *For EVMs subject to EU Directive 2014/30/EU (Electromagnetic Compatibility Directive)*:

This is a class A product intended for use in environments other than domestic environments that are connected to a low-voltage power-supply network that supplies buildings used for domestic purposes. In a domestic environment this product may cause radio interference in which case the user may be required to take adequate measures.

4 *EVM Use Restrictions and Warnings:*

4.1 EVMS ARE NOT FOR USE IN FUNCTIONAL SAFETY AND/OR SAFETY CRITICAL EVALUATIONS, INCLUDING BUT NOT LIMITED TO EVALUATIONS OF LIFE SUPPORT APPLICATIONS.

4.2 User must read and apply the user guide and other available documentation provided by TI regarding the EVM prior to handling or using the EVM, including without limitation any warning or restriction notices. The notices contain important safety information related to, for example, temperatures and voltages.

4.3 *Safety-Related Warnings and Restrictions:*

4.3.1 User shall operate the EVM within TI's recommended specifications and environmental considerations stated in the user guide, other available documentation provided by TI, and any other applicable requirements and employ reasonable and customary safeguards. Exceeding the specified performance ratings and specifications (including but not limited to input and output voltage, current, power, and environmental ranges) for the EVM may cause personal injury or death, or property damage. If there are questions concerning performance ratings and specifications, User should contact a TI field representative prior to connecting interface electronics including input power and intended loads. Any loads applied outside of the specified output range may also result in unintended and/or inaccurate operation and/or possible permanent damage to the EVM and/or interface electronics. Please consult the EVM user guide prior to connecting any load to the EVM output. If there is uncertainty as to the load specification, please contact a TI field representative. During normal operation, even with the inputs and outputs kept within the specified allowable ranges, some circuit components may have elevated case temperatures. These components include but are not limited to linear regulators, switching transistors, pass transistors, current sense resistors, and heat sinks, which can be identified using the information in the associated documentation. When working with the EVM, please be aware that the EVM may become very warm.

4.3.2 EVMs are intended solely for use by technically qualified, professional electronics experts who are familiar with the dangers and application risks associated with handling electrical mechanical components, systems, and subsystems. User assumes all responsibility and liability for proper and safe handling and use of the EVM by User or its employees, affiliates, contractors or designees. User assumes all responsibility and liability to ensure that any interfaces (electronic and/or mechanical) between the EVM and any human body are designed with suitable isolation and means to safely limit accessible leakage currents to minimize the risk of electrical shock hazard. User assumes all responsibility and liability for any improper or unsafe handling or use of the EVM by User or its employees, affiliates, contractors or designees.

4.4 User assumes all responsibility and liability to determine whether the EVM is subject to any applicable international, federal, state, or local laws and regulations related to User's handling and use of the EVM and, if applicable, User assumes all responsibility and liability for compliance in all respects with such laws and regulations. User assumes all responsibility and liability for proper disposal and recycling of the EVM consistent with all applicable international, federal, state, and local requirements.

5. *Accuracy of Information:* To the extent TI provides information on the availability and function of EVMs, TI attempts to be as accurate as possible. However, TI does not warrant the accuracy of EVM descriptions, EVM availability or other information on its websites as accurate, complete, reliable, current, or error-free.

6. *Disclaimers:*

6.1 EXCEPT AS SET FORTH ABOVE, EVMS AND ANY MATERIALS PROVIDED WITH THE EVM (INCLUDING, BUT NOT LIMITED TO, REFERENCE DESIGNS AND THE DESIGN OF THE EVM ITSELF) ARE PROVIDED "AS IS" AND "WITH ALL FAULTS." TI DISCLAIMS ALL OTHER WARRANTIES, EXPRESS OR IMPLIED, REGARDING SUCH ITEMS, INCLUDING BUT NOT LIMITED TO ANY EPIDEMIC FAILURE WARRANTY OR IMPLIED WARRANTIES OF MERCHANTABILITY OR FITNESS FOR A PARTICULAR PURPOSE OR NON-INFRINGEMENT OF ANY THIRD PARTY PATENTS, COPYRIGHTS, TRADE SECRETS OR OTHER INTELLECTUAL PROPERTY RIGHTS.

6.2 EXCEPT FOR THE LIMITED RIGHT TO USE THE EVM SET FORTH HEREIN, NOTHING IN THESE TERMS SHALL BE CONSTRUED AS GRANTING OR CONFERRING ANY RIGHTS BY LICENSE, PATENT, OR ANY OTHER INDUSTRIAL OR INTELLECTUAL PROPERTY RIGHT OF TI, ITS SUPPLIERS/LICENSORS OR ANY OTHER THIRD PARTY, TO USE THE EVM IN ANY FINISHED END-USER OR READY-TO-USE FINAL PRODUCT, OR FOR ANY INVENTION, DISCOVERY OR IMPROVEMENT, REGARDLESS OF WHEN MADE, CONCEIVED OR ACQUIRED.

7. *USER'S INDEMNITY OBLIGATIONS AND REPRESENTATIONS.* USER WILL DEFEND, INDEMNIFY AND HOLD TI, ITS LICENSORS AND THEIR REPRESENTATIVES HARMLESS FROM AND AGAINST ANY AND ALL CLAIMS, DAMAGES, LOSSES, EXPENSES, COSTS AND LIABILITIES (COLLECTIVELY, "CLAIMS") ARISING OUT OF OR IN CONNECTION WITH ANY HANDLING OR USE OF THE EVM THAT IS NOT IN ACCORDANCE WITH THESE TERMS. THIS OBLIGATION SHALL APPLY WHETHER CLAIMS ARISE UNDER STATUTE, REGULATION, OR THE LAW OF TORT, CONTRACT OR ANY OTHER LEGAL THEORY, AND EVEN IF THE EVM FAILS TO PERFORM AS DESCRIBED OR EXPECTED.

8. *Limitations on Damages and Liability:*

   8.1 *General Limitations*. IN NO EVENT SHALL TI BE LIABLE FOR ANY SPECIAL, COLLATERAL, INDIRECT, PUNITIVE, INCIDENTAL, CONSEQUENTIAL, OR EXEMPLARY DAMAGES IN CONNECTION WITH OR ARISING OUT OF THESE TERMS OR THE USE OF THE EVMS , REGARDLESS OF WHETHER TI HAS BEEN ADVISED OF THE POSSIBILITY OF SUCH DAMAGES. EXCLUDED DAMAGES INCLUDE, BUT ARE NOT LIMITED TO, COST OF REMOVAL OR REINSTALLATION, ANCILLARY COSTS TO THE PROCUREMENT OF SUBSTITUTE GOODS OR SERVICES, RETESTING, OUTSIDE COMPUTER TIME, LABOR COSTS, LOSS OF GOODWILL, LOSS OF PROFITS, LOSS OF SAVINGS, LOSS OF USE, LOSS OF DATA, OR BUSINESS INTERRUPTION. NO CLAIM, SUIT OR ACTION SHALL BE BROUGHT AGAINST TI MORE THAN TWELVE (12) MONTHS AFTER THE EVENT THAT GAVE RISE TO THE CAUSE OF ACTION HAS OCCURRED.

   8.2 *Specific Limitations.* IN NO EVENT SHALL TI'S AGGREGATE LIABILITY FROM ANY USE OF AN EVM PROVIDED HEREUNDER, INCLUDING FROM ANY WARRANTY, INDEMITY OR OTHER OBLIGATION ARISING OUT OF OR IN CONNECTION WITH THESE TERMS, , EXCEED THE TOTAL AMOUNT PAID TO TI BY USER FOR THE PARTICULAR EVM(S) AT ISSUE DURING THE PRIOR TWELVE (12) MONTHS WITH RESPECT TO WHICH LOSSES OR DAMAGES ARE CLAIMED. THE EXISTENCE OF MORE THAN ONE CLAIM SHALL NOT ENLARGE OR EXTEND THIS LIMIT.

9. *Return Policy.* Except as otherwise provided, TI does not offer any refunds, returns, or exchanges. Furthermore, no return of EVM(s) will be accepted if the package has been opened and no return of the EVM(s) will be accepted if they are damaged or otherwise not in a resalable condition. If User feels it has been incorrectly charged for the EVM(s) it ordered or that delivery violates the applicable order, User should contact TI. All refunds will be made in full within thirty (30) working days from the return of the components(s), excluding any postage or packaging costs.

10. *Governing Law:* These terms and conditions shall be governed by and interpreted in accordance with the laws of the State of Texas, without reference to conflict-of-laws principles. User agrees that non-exclusive jurisdiction for any dispute arising out of or relating to these terms and conditions lies within courts located in the State of Texas and consents to venue in Dallas County, Texas. Notwithstanding the foregoing, any judgment may be enforced in any United States or foreign court, and TI may seek injunctive relief in any United States or foreign court.

Mailing Address: Texas Instruments, Post Office Box 655303, Dallas, Texas 75265
Copyright © 2023, Texas Instruments Incorporated

IMPORTANT NOTICE AND DISCLAIMER

TI PROVIDES TECHNICAL AND RELIABILITY DATA (INCLUDING DATASHEETS), DESIGN RESOURCES (INCLUDING REFERENCE DESIGNS), APPLICATION OR OTHER DESIGN ADVICE, WEB TOOLS, SAFETY INFORMATION, AND OTHER RESOURCES “AS IS” AND WITH ALL FAULTS, AND DISCLAIMS ALL WARRANTIES, EXPRESS AND IMPLIED, INCLUDING WITHOUT LIMITATION ANY IMPLIED WARRANTIES OF MERCHANTABILITY, FITNESS FOR A PARTICULAR PURPOSE OR NON-INFRINGEMENT OF THIRD PARTY INTELLECTUAL PROPERTY RIGHTS.

These resources are intended for skilled developers designing with TI products. You are solely responsible for (1) selecting the appropriate TI products for your application, (2) designing, validating and testing your application, and (3) ensuring your application meets applicable standards, and any other safety, security, regulatory or other requirements.

These resources are subject to change without notice. TI grants you permission to use these resources only for development of an application that uses the TI products described in the resource. Other reproduction and display of these resources is prohibited. No license is granted to any other TI intellectual property right or to any third party intellectual property right. TI disclaims responsibility for, and you fully indemnify TI and its representatives against any claims, damages, costs, losses, and liabilities arising out of your use of these resources.

TI’s products are provided subject to TI’s Terms of Sale, TI’s General Quality Guidelines, or other applicable terms available either on ti.com or provided in conjunction with such TI products. TI’s provision of these resources does not expand or otherwise alter TI’s applicable warranties or warranty disclaimers for TI products. Unless TI explicitly designates a product as custom or customer-specified, TI products are standard, catalog, general purpose devices.

TI objects to and rejects any additional or different terms you may propose.

Copyright © 2026, Texas Instruments Incorporated

Last updated 10/2025