CD74HC4051-Q1 Automotive Analog Multiplexer or Demultiplexer

1 Features

- Qualified for automotive applications
- Wide analog input voltage range of ± 5V maximum
- Low ON resistance:
  - 70Ω typical ($V_{CC} - V_{EE}$ = 4.5V)
  - 40Ω typical ($V_{CC} - V_{EE}$ = 9V)
- Low crosstalk between switches
- Fast switching and propagation speeds
- Break-before-make switching
- Operation control voltage = 2V to 6V
- Switch voltage = 0V to 10V
- High noise immunity N_{IL} = 30%, N_{IH} = 30% of V_{CC} , V_{CC} = 5V

2 Applications

- Digital radio
- Signal gating
- Factory automation
- Televisions
- Appliances
- Programmable logic circuits
- Sensors

3 Description

This device is a digitally controlled analog switch that utilizes silicon-gate CMOS technology to achieve operating speeds similar to LSTTL, with the low power consumption of standard CMOS integrated circuits.

This analog multiplexer/demultiplexer controls analog voltages that may vary across the voltage supply range (for example, V_{CC} to V_{EE}). These bidirectional switches allow any analog input to be used as an output and vice versa. The switches have low ON resistance and low OFF leakages. In addition, the device has an enable control ($\overline{E}$) that, when high, disables all switches to their OFF state.

Package Information

PART NUMBER	PACKAGE(1)	PACKAGE SIZE(2)
CD74HC4051-Q1	PW (TSSOP, 16)	5mm × 6.4mm
	D (SOIC, 16)	9.9mm × 3.9mm

(1) For more information see, Section 10
(2) The package size (length × width) is a nominal value and includes pins, where applicable.

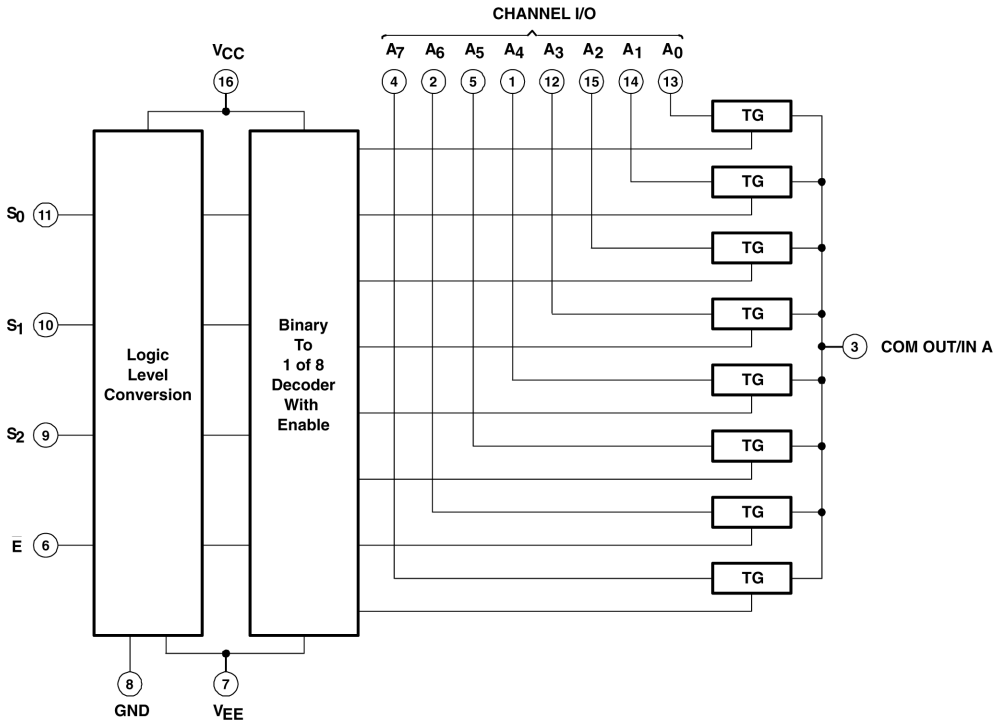

Logic Diagram (Positive Logic)

An IMPORTANT NOTICE at the end of this data sheet addresses availability, warranty, changes, use in safety-critical applications, intellectual property matters and other important disclaimers. PRODUCTION DATA.

Table of Contents

1 Features....1
2 Applications....1
3 Description....1
4 Pin Configuration and Functions....2
5 Specifications....3
5.1 Absolute Maximum Ratings....3
5.2 Recommended Operating Conditions....3
5.3 Recommended Operating Area as a Function of Supply Voltages....4
5.4 Electrical Characteristics....4
5.5 Switching Characteristics....5
5.6 Operating Characteristics....5
5.7 Analog Channel Characteristics....5
5.8 Typical Characteristics....6
6 Parameter Measurement Information....7
7 Detailed Description....9
7.1 Functional Block Diagram....9
7.2 Device Functional Modes....9
8 Device and Documentation Support....10
8.1 Receiving Notification of Documentation Updates....10
8.2 Support Resources....10
8.3 Trademarks....10
8.4 Electrostatic Discharge Caution....10
8.5 Glossary....10
9 Revision History....10
10 Mechanical, Packaging, and Orderable Information....11

4 Pin Configuration and Functions

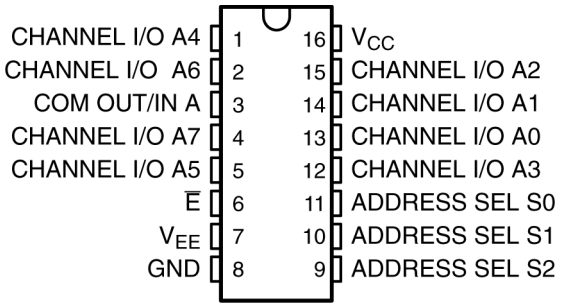

Figure 4-1. PW, D Package, 16-Pin TSSOP, SOIC (Top View)

Table 4-1. Function Table

INPUTS				ON CHANNEL(S)
E	S_2	S_1	S_0	
L	L	L	L	A0
L	L	L	H	A1
L	L	H	L	A2
L	L	H	H	A3
L	H	L	L	A4
L	H	L	H	A5
L	H	H	L	A6
L	H	H	H	A7
H	X	X	X	None

Copyright © 2024 Texas Instruments Incorporated

5 Specifications

5.1 Absolute Maximum Ratings

over operating free-air temperature range (unless otherwise noted) [1]

			MIN	MAX	UNIT
$V_{CC} - V_{EE}$ (see [2])	Supply voltage range		−0.5	10.5	V
V_{CC}	Supply voltage range		−0.5	7	V
V_{EE}	Supply voltage range		+0.5	−7	V
I_{IK} (V_I < −0.5V or V_I > V_{CC} + 0.5V)	Input clamp current			±20	mA
I_{OK} (V_O < V_{EE} − 0.5V or V_O > V_{CC} + 0.5V)	Output clamp current			±20	mA
(V_I > V_{EE} − 0.5V or V_I < V_{CC} + 0.5V)	Switch current			±25	mA
	Continuous current through V_{CC} or GND			±50	mA
I_{EE}	V_{EE} current			−20	mA
$R_{\theta JA}$	Package thermal impedance	D package		91.6	°C/W
		PW package		116.5	°C/W
T_J	Maximum junction temperature			150	°C
Lead temperature (during soldering):		At distance 1/16 ± 1/32 inch (1,59 ± 0,79 mm) from case for 10 s max		300	°C
T_{stg}	Storage temperature range		−65	150	°C

(1) Stresses beyond those listed under *Absolute Maximum Ratings* may cause permanent damage to the device. These are stress ratings only, and functional operation of the device at these or any other conditions beyond those indicated under *Recommended Operating Conditions* is not implied. Exposure to absolute-maximum-rated conditions for extended periods may affect device reliability.
(2) All voltages referenced to GND unless otherwise specified.

5.2 Recommended Operating Conditions

(see [1])

			MIN	MAX	UNIT
V_{CC}	Supply voltage (see [2])		2	6	V
	Supply voltage, $V_{CC} - V_{EE}$ (see Figure 5-1)		2	10	V
V_{EE}	Supply voltage, (see [2] and Figure 5-2)		0	−6	V
V_{IH}	High-level input voltage	V_{CC} = 2V	1.5		V
		V_{CC} = 4.5V	3.15		
		V_{CC} = 6V	4.2		
V_{IL}	Low-level input voltage	V_{CC} = 2V		0.5	V
		V_{CC} = 4.5V		1.35	
		V_{CC} = 6V		1.8	
V_I	Input control voltage		0	V_{CC}	V
V_{IS}	Analog switch I/O voltage		V_{EE}	V_{CC}	V
t_t	Input transition (rise and fall) time	V_{CC} = 2V	0	1000	ns
		V_{CC} = 4.5V	0	500	
		V_{CC} = 6V	0	400	
T_A	Operating free-air temperature		−40	125	°C

(1) All unused inputs of the device must be held at V_{CC} or GND for proper device operation. Refer to the TI application report, *Implications of Slow or Floating CMOS Inputs*, literature number SCBA004.
(2) In certain applications, the external load resistor current may include both V_{CC} and signal-line components. To avoid drawing V_{CC} current when switch current flows into the transmission gate inputs, the voltage drop across the bidirectional switch must not exceed

Copyright © 2024 Texas Instruments Incorporated

0.6V (calculated from r_{on} values shown in electrical characteristics table). No V_{CC} current flows through R_L if the switch current flows into the COM OUT/IN A terminal.

5.3 Recommended Operating Area as a Function of Supply Voltages

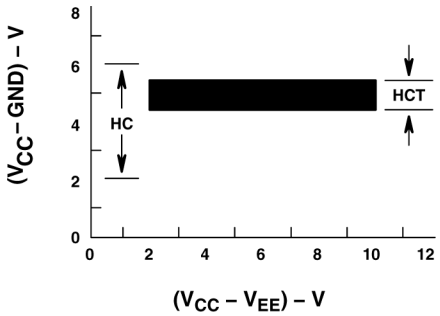

Figure 5-1. $(V_{CC} – V_{EE}) – V$

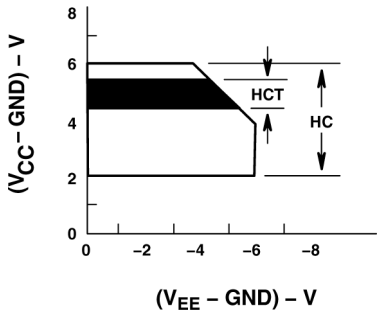

Figure 5-2. $(V_{EE} – GND) – V$

5.4 Electrical Characteristics

over recommended operating free-air temperature range (unless otherwise noted)

PARAMETER	TEST CONDITIONS		V_{EE}	V_{CC}	T_A = 25 °C			T_A = −40 °C TO 125°C		UNIT
					MIN	TYP	MAX	MIN	MAX	
r_{on}	I_O = 1 mA, V_I = V_{IH} or V_{IL}, See Figure 5-3	V_{IS} = V_{CC} or V_{EE}	0V	4.5V		70	160		240	Ω
			0V	6V		60	140		210	
			−4.5 V	4.5V		40	120		180	
		V_{IS} = V_{CC} to V_{EE}	0V	4.5V		90	180		270	
			0V	6V		80	160		240	
			−4.5 V	4.5V		45	130		195	
Δr_{on}	Between any two channels		0V	4.5V		10				Ω
			0V	6V		8.5				
			−4.5 V	4.5V		5				
I_{IZ}	For switch OFF: When V_{IS} = V_{CC}, V_{OS} = V_{EE}; When V_{IS} = V_{EE}, V_{OS} = V_{CC} For switch ON: All applicable combinations of V_{IS} and V_{OS} voltage levels, V_I = V_{IH} or V_{IL}		0V	6V			±0.2		±2	μA
			−5V	5V			±0.4		±4	
I_{IL}	V_I = V_{CC} or GND		0V	6V			±0.1		±1	μA
I_{CC}	I_O = 0, V_I = V_{CC} or GND	When V_{IS} = V_{EE}, V_{OS} = V_{CC}	0V	6V			12		160	μA
		When V_{IS} = V_{CC}, V_{OS} = V_{EE}	−5V	5V			32		320	

Copyright © 2024 Texas Instruments Incorporated

5.5 Switching Characteristics

over recommended operating free-air temperature range (unless otherwise noted) (see Figure 6-5)

PARAMETER	FROM (INPUT)	TO (OUTPUT)	LOAD CAPACITANCE	V_{EE}	V_{CC}	T_A = 25°C			T_A = −40 °C TO 125°C		UNIT
						MIN	TYP	MAX	MIN	MAX	
t_{pd}	IN	OUT	C_L = 15pF		5V		4				ns
			C_L = 50pF	0V	2V			60		90	ns
					4.5V			12		18	
					6V			10		15	
				−4.5 V	4.5V			8		12	
t_{en}	ADDRESS SEL or $\overline{E}$	OUT	C_L = 15pF		5V		19				ns
			C_L = 50pF	0V	2V			325		490	
					4.5V			45		68	
					6V			38		57	
				−4.5 V	4.5V			32		48	
t_{dis}	ADDRESS SEL or $\overline{E}$	OUT	C_L = 15pF		5V		27				ns
			C_L = 50pF	0V	2V			250		400	
					4.5V			50		68	
					6V			44		57	
				−4.5 V	4.5V			44		55	
C_I	Control		C_L = 50pF					10		10	pF

5.6 Operating Characteristics

V_{CC} = 5V, T_A = 25°C, Input t_r, t_f = 6 ns

PARAMETER		TYP	UNIT
C_{pd}	Power dissipation capacitance (see (1))	50	pF

(1) C_{pd} is used to determine the dynamic power consumption, per package.

- $P_D = C_{pd} V_{CC}{}^2 f_I + \Sigma (C_L + C_S) V_{CC}{}^2 f_O$
- f_O = output frequency
- f_I = input frequency
- C_L = output load capacitance
- C_S = switch capacitance
- V_{CC} = supply voltage

5.7 Analog Channel Characteristics

T_A = 25°C

PARAMETER		TEST CONDITIONS	V_{EE}	V_{CC}	MIN	TYP	MAX	UNIT
C_I	Switch input capacitance					5		pF
C_{COM}	Common output capacitance					25		pF
f_{max}	Minimum switch frequency response at −3 dB	See Figure 6-1 and Figure 5-4, and (1) and (2)	−2.25V	2.25V		145		MHz
			−4.5V	4.5V		180		

5.7 Analog Channel Characteristics (continued)

T_A = 25°C

PARAMETER		TEST CONDITIONS	V_{EE}	V_{CC}	MIN	TYP	MAX	UNIT
THD	Sine-wave distortion	See Figure 6-2	−2.25V	2.25V		0.035		%
			−4.5V	4.5V		0.018		
O_{ISO}	Switch OFF signal feed through	See Figure 6-4 and Figure 5-5, and (2) and (3)	−2.25V	2.25V		−73		dB
			−4.5V	4.5V		−75		

(1) Adjust input voltage to obtain 0 dBm at V_{OS} for f_{IN} = 1MHz.
(2) V_{IS} is centered at $(V_{CC} - V_{EE})/2$.
(3) Adjust input for 0 dBm.

5.8 Typical Characteristics

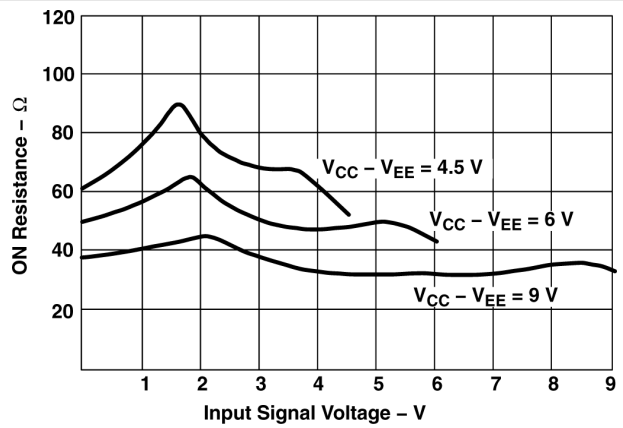

Figure 5-3. Typical on Resistance vs Input Signal Voltage

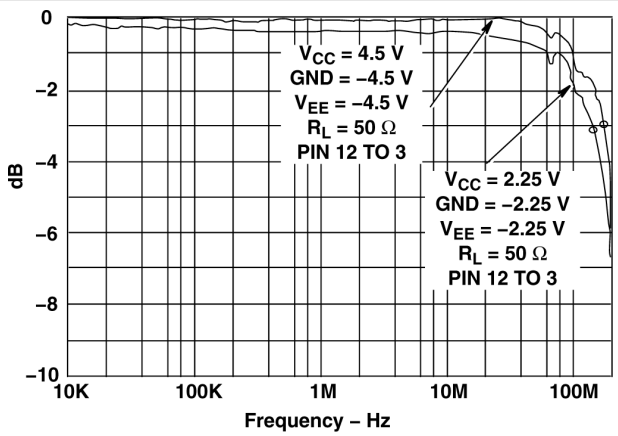

Figure 5-4. Channel on Bandwidth

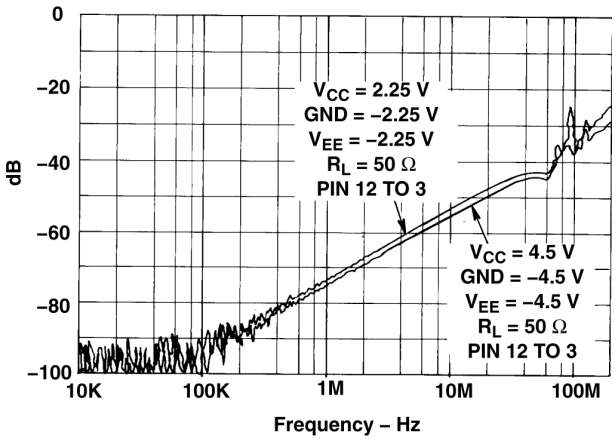

Figure 5-5. Channel off Feed-through

Copyright © 2024 Texas Instruments Incorporated

6 Parameter Measurement Information

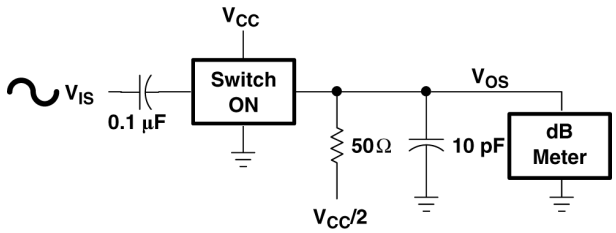

Figure 6-1. Frequency-Response Test Circuit

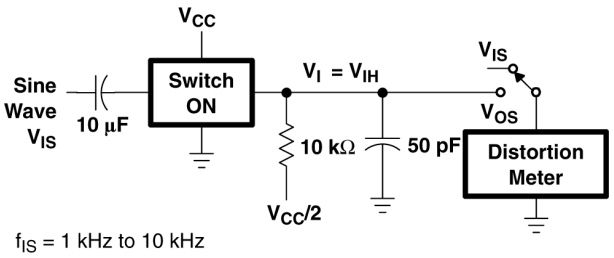

Figure 6-2. Sine-Wave Distortion Test Circuit

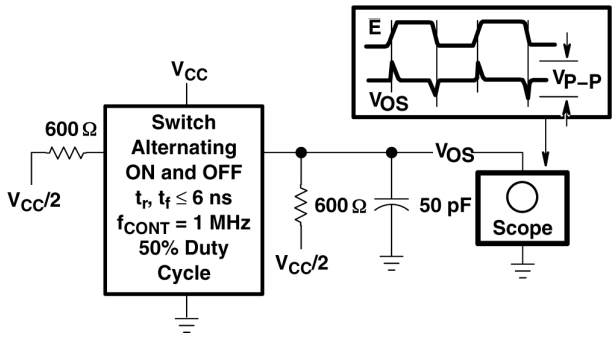

Figure 6-3. Control to Switch Feed-through Noise Test Circuit

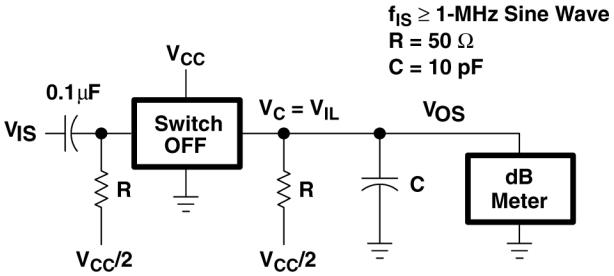

Figure 6-4. Switch off Signal Feed-through Test Circuit

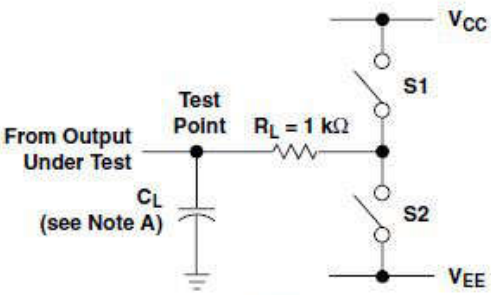

LOAD CIRCUIT

PARAMETER		S1	S2
t_{en}	t_{PZH}	Open	Closed
	t_{PZL}	Closed	Open
t_{dis}	t_{PHZ}	Open	Closed
	t_{PLZ}	Closed	Open
t_{pd}		Open	Open

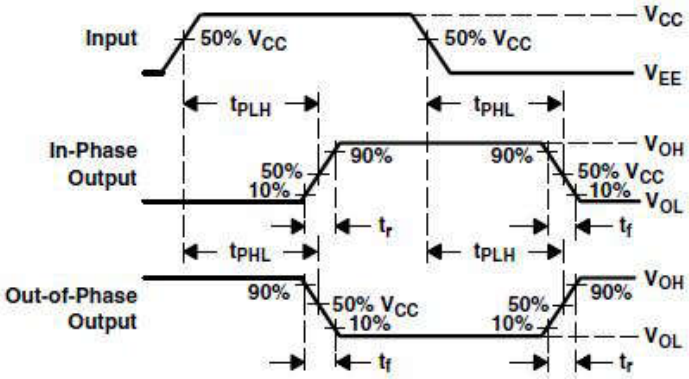

VOLTAGE WAVEFORMS
PROPAGATION DELAY AND OUTPUT TRANSITION TIMES

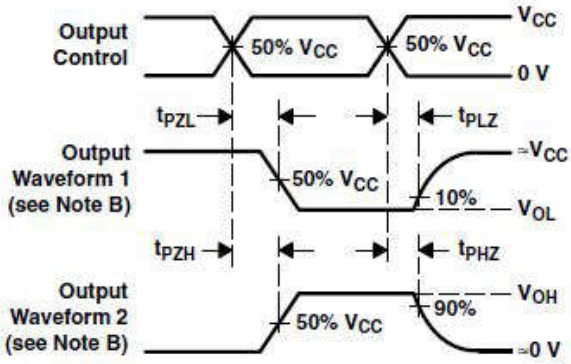

VOLTAGE WAVEFORMS
OUTPUT ENABLE AND DISABLE TIMES

A. C_L includes probe and test-fixture capacitance.
B. Waveform 1 is for an output with internal conditions such that the output is low except when disabled by the output control. Waveform 2 is for an output with internal conditions such that the output is high except when disabled by the output control.
C. Phase relationships between waveforms were chosen arbitrarily. All input pulses are supplied by generators having the following characteristics: PRR ≤ 1MHz, Z_O = 50Ω, t_r = 6 ns, t_f = 6 ns.
D. For clock inputs, f_{max} is measured with the input duty cycle at 50%.
E. The outputs are measured one at a time with one input transition per measurement.
F. t_{PLZ} and t_{PHZ} are the same as t_{dis}.
G. t_{PZL} and t_{PZH} are the same as t_{en}.
H. t_{PLH} and t_{PHL} are the same as t_{pd}.

Figure 6-5. Load Circuit and Voltage Waveforms

Copyright © 2024 Texas Instruments Incorporated

7 Detailed Description

7.1 Functional Block Diagram

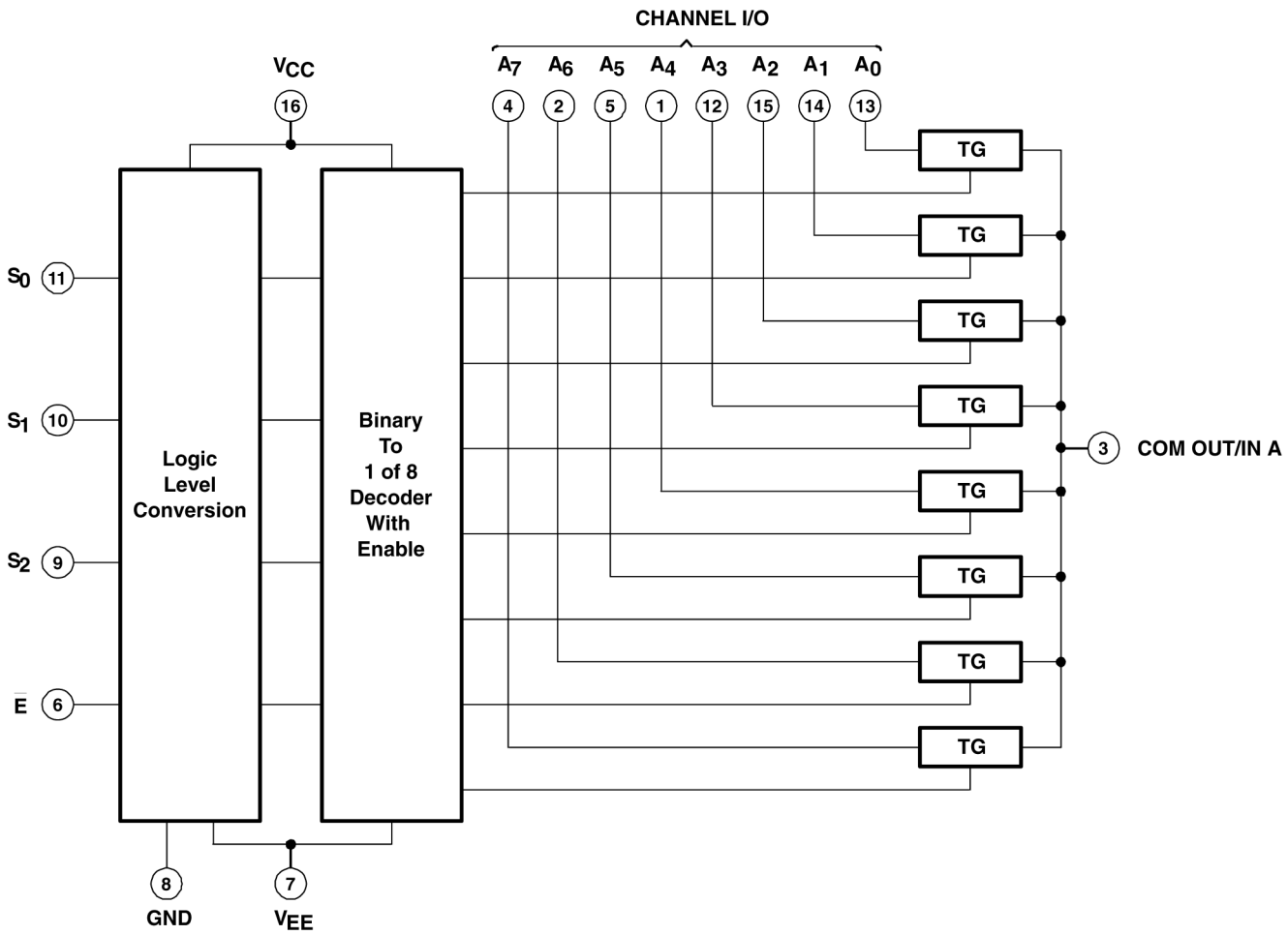

Figure 7-1. Logic Diagram (Positive Logic)

7.2 Device Functional Modes

Table 7-1. Function Table

INPUTS				ON CHANNEL(S)
$\overline{E}$	S_2	S_1	S_0	
L	L	L	L	A0
L	L	L	H	A1
L	L	H	L	A2
L	L	H	H	A3
L	H	L	L	A4
L	H	L	H	A5
L	H	H	L	A6
L	H	H	H	A7
H	X	X	X	None

8 Device and Documentation Support

TI offers an extensive line of development tools. Tools and software to evaluate the performance of the device, generate code, and develop solutions are listed below.

8.1 Receiving Notification of Documentation Updates

To receive notification of documentation updates, navigate to the device product folder on ti.com. Click on *Notifications* to register and receive a weekly digest of any product information that has changed. For change details, review the revision history included in any revised document.

8.2 Support Resources

TI E2E™ support forums are an engineer's go-to source for fast, verified answers and design help — straight from the experts. Search existing answers or ask your own question to get the quick design help you need.

Linked content is provided "AS IS" by the respective contributors. They do not constitute TI specifications and do not necessarily reflect TI's views; see TI's Terms of Use.

8.3 Trademarks

TI E2E™ is a trademark of Texas Instruments.
All trademarks are the property of their respective owners.

8.4 Electrostatic Discharge Caution

This integrated circuit can be damaged by ESD. Texas Instruments recommends that all integrated circuits be handled with appropriate precautions. Failure to observe proper handling and installation procedures can cause damage.

ESD damage can range from subtle performance degradation to complete device failure. Precision integrated circuits may be more susceptible to damage because very small parametric changes could cause the device not to meet its published specifications.

8.5 Glossary

TI Glossary	This glossary lists and explains terms, acronyms, and definitions.

9 Revision History

NOTE: Page numbers for previous revisions may differ from page numbers in the current version.

Changes from Revision A (April 2008) to Revision B (April 2024) **Page**

- Updated the numbering format for tables, figures, and cross-references throughout the document..... 1
- Changed M (SOIC, 16) to D (SOIC, 16) to accurately reflect the package drawing..... 1
- Changed the package thermal impedance for the D package from: *73°C/W* to: *91.6°C/W* 3
- Changed the package thermal impedance for the PW package from: *108°C/W* to: *116.5°C/W* 3
- Changed I_{CC} MAX from: *8µA* to: *12µA* when $V_{IS} = V_{EE}$, $V_{OS} = V_{CC}$ at a TA = 25°C 4
- Changed I_{CC} MAX from: *16µA* to: *32µA* when $V_{IS} = V_{CC}$, $V_{OS} = V_{EE}$ at a TA = 25°C 4
- Changed t_{en} MAX from: *225ns* to: *325ns* when C_L = 50pF at a TA = 25°C and from: *340ns* to: *490ns* when C_L = 50pF at a TA = -40°C to 125°C..... 5
- Changed t_{dis} TYP from: *19ns* to: *27ns* when C_L = 15pF at a TA = 25°C..... 5
- Changed t_{dis} MAX from: *225ns* to: *250ns* when C_L = 50pF, V_{EE} = 0V, and V_{CC} = 2V at a TA = 25°C, and from: *340ns* to: *400ns* at a TA = -40°C to 125°C..... 5
- Changed t_{dis} MAX from: *45ns* to: *50ns* when C_L = 50pF, V_{EE} = 0V, and V_{CC} = 4.5V at a TA = 25°C.....5
- Changed t_{dis} MAX from: *38ns* to: *44ns* when C_L = 50pF, V_{EE} = 0V, and V_{CC} = 6V at a TA = 25°C.....5
- Changed t_{dis} MAX from: *32ns* to: *44ns* when C_L = 50pF, V_{EE} = -4.5V, and V_{CC} = 4.5V at a TA = 25°C, and from: *48ns* to: *55ns* at a TA = -40°C to 125°C.....5
- Removed the TBD $\overline{E}$ or ADDRESS SEL to switch feed-through noise parameter.....5

Copyright © 2024 Texas Instruments Incorporated

10 Mechanical, Packaging, and Orderable Information

The following pages include mechanical, packaging, and orderable information. This information is the most current data available for the designated devices. This data is subject to change without notice and revision of this document. For browser-based versions of this data sheet, refer to the left-hand navigation.

PACKAGING INFORMATION

Orderable part number	Status (1)	Material type (2)	Package | Pins	Package qty | Carrier	RoHS (3)	Lead finish/ Ball material (4)	MSL rating/ Peak reflow (5)	Op temp (°C)	Part marking (6)
CD74HC4051QM96G4Q1	Obsolete	Production	SOIC (D) | 16	-	-	Call TI	Call TI	-40 to 125	HC4051Q
CD74HC4051QM96Q1	Active	Production	SOIC (D) | 16	2500 | LARGE T&R	Yes	NIPDAU	Level-1-260C-UNLIM	-40 to 125	HC4051Q
CD74HC4051QM96Q1.A	Active	Production	SOIC (D) | 16	2500 | LARGE T&R	Yes	NIPDAU	Level-1-260C-UNLIM	-40 to 125	HC4051Q
CD74HC4051QPWRG4Q1	Obsolete	Production	TSSOP (PW) | 16	-	-	Call TI	Call TI	-40 to 125	HJ4051Q
CD74HC4051QPWRQ1	Active	Production	TSSOP (PW) | 16	2000 | LARGE T&R	Yes	NIPDAU | SN	Level-1-260C-UNLIM	-40 to 125	HJ4051Q
CD74HC4051QPWRQ1.A	Active	Production	TSSOP (PW) | 16	2000 | LARGE T&R	Yes	NIPDAU	Level-1-260C-UNLIM	-40 to 125	HJ4051Q

(1) **Status:** For more details on status, see our product life cycle.

(2) **Material type:** When designated, preproduction parts are prototypes/experimental devices, and are not yet approved or released for full production. Testing and final process, including without limitation quality assurance, reliability performance testing, and/or process qualification, may not yet be complete, and this item is subject to further changes or possible discontinuation. If available for ordering, purchases will be subject to an additional waiver at checkout, and are intended for early internal evaluation purposes only. These items are sold without warranties of any kind.

(3) **RoHS values:** Yes, No, RoHS Exempt. See the TI RoHS Statement for additional information and value definition.

(4) **Lead finish/Ball material:** Parts may have multiple material finish options. Finish options are separated by a vertical ruled line. Lead finish/Ball material values may wrap to two lines if the finish value exceeds the maximum column width.

(5) **MSL rating/Peak reflow:** The moisture sensitivity level ratings and peak solder (reflow) temperatures. In the event that a part has multiple moisture sensitivity ratings, only the lowest level per JEDEC standards is shown. Refer to the shipping label for the actual reflow temperature that will be used to mount the part to the printed circuit board.

(6) **Part marking:** There may be an additional marking, which relates to the logo, the lot trace code information, or the environmental category of the part.

Multiple part markings will be inside parentheses. Only one part marking contained in parentheses and separated by a "~" will appear on a part. If a line is indented then it is a continuation of the previous line and the two combined represent the entire part marking for that device.

Important Information and Disclaimer: The information provided on this page represents TI's knowledge and belief as of the date that it is provided. TI bases its knowledge and belief on information provided by third parties, and makes no representation or warranty as to the accuracy of such information. Efforts are underway to better integrate information from third parties. TI has taken and continues to take reasonable steps to provide representative and accurate information but may not have conducted destructive testing or chemical analysis on incoming materials and chemicals. TI and TI suppliers consider certain information to be proprietary, and thus CAS numbers and other limited information may not be available for release.

In no event shall TI's liability arising out of such information exceed the total purchase price of the TI part(s) at issue in this document sold by TI to Customer on an annual basis.

OTHER QUALIFIED VERSIONS OF CD74HC4051-Q1 :

- Catalog : CD74HC4051
- Enhanced Product : CD74HC4051-EP
- Military : CD54HC4051

NOTE: Qualified Version Definitions:

- Catalog - TI's standard catalog product
- Enhanced Product - Supports Defense, Aerospace and Medical Applications
- Military - QML certified for Military and Defense Applications

TAPE AND REEL INFORMATION

REEL DIMENSIONS

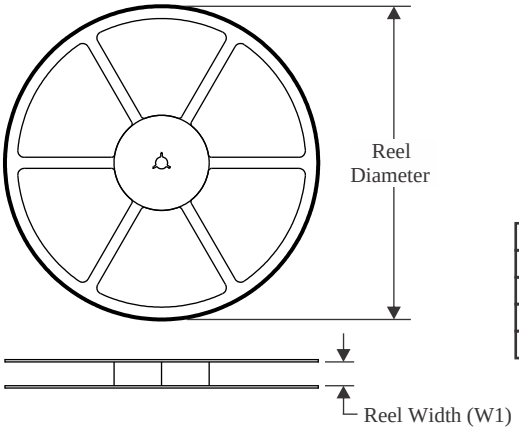

TAPE DIMENSIONS

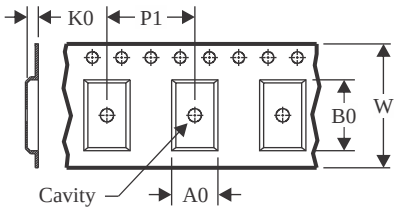

A0	Dimension designed to accommodate the component width
B0	Dimension designed to accommodate the component length
K0	Dimension designed to accommodate the component thickness
W	Overall width of the carrier tape
P1	Pitch between successive cavity centers

QUADRANT ASSIGNMENTS FOR PIN 1 ORIENTATION IN TAPE

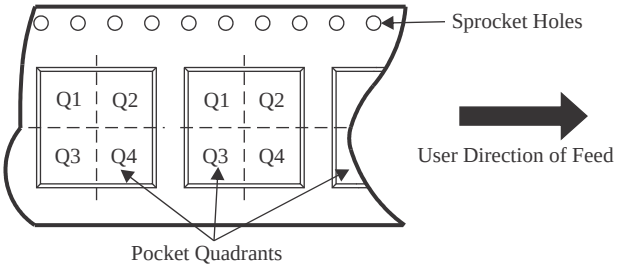

*All dimensions are nominal

Device	Package Type	Package Drawing	Pins	SPQ	Reel Diameter (mm)	Reel Width W1 (mm)	A0 (mm)	B0 (mm)	K0 (mm)	P1 (mm)	W (mm)	Pin1 Quadrant
CD74HC4051QPWRQ1	TSSOP	PW	16	2000	330.0	12.4	6.9	5.6	1.6	8.0	12.0	Q1
CD74HC4051QPWRQ1	TSSOP	PW	16	2000	330.0	12.4	6.9	5.6	1.6	8.0	12.0	Q1

TAPE AND REEL BOX DIMENSIONS

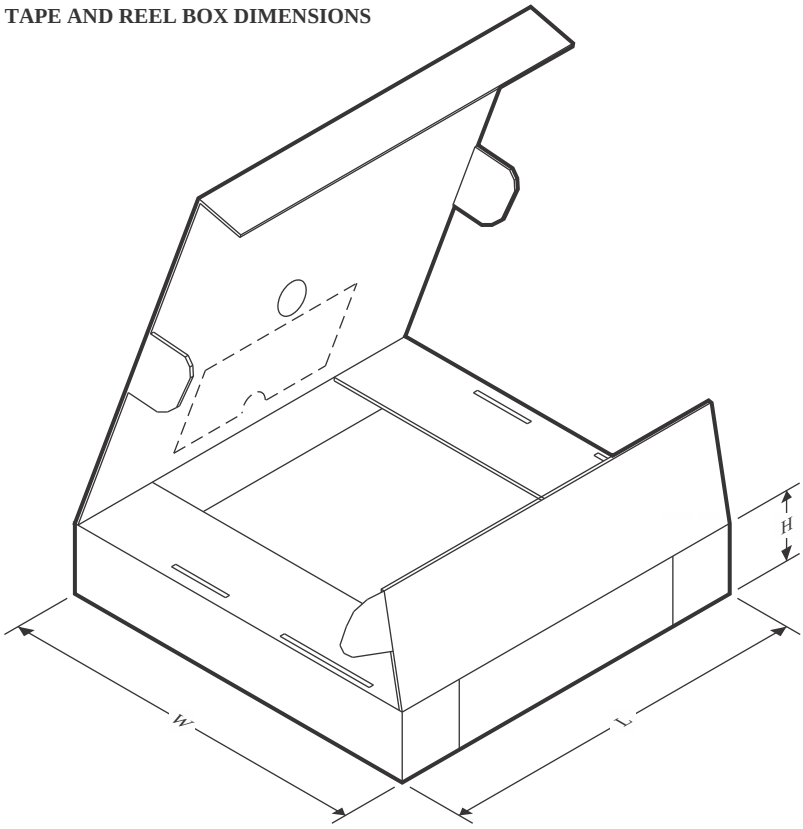

*All dimensions are nominal

Device	Package Type	Package Drawing	Pins	SPQ	Length (mm)	Width (mm)	Height (mm)
CD74HC4051QPWRQ1	TSSOP	PW	16	2000	356.0	356.0	35.0
CD74HC4051QPWRQ1	TSSOP	PW	16	2000	353.0	353.0	32.0

D (R–PDSO–G16) PLASTIC SMALL OUTLINE

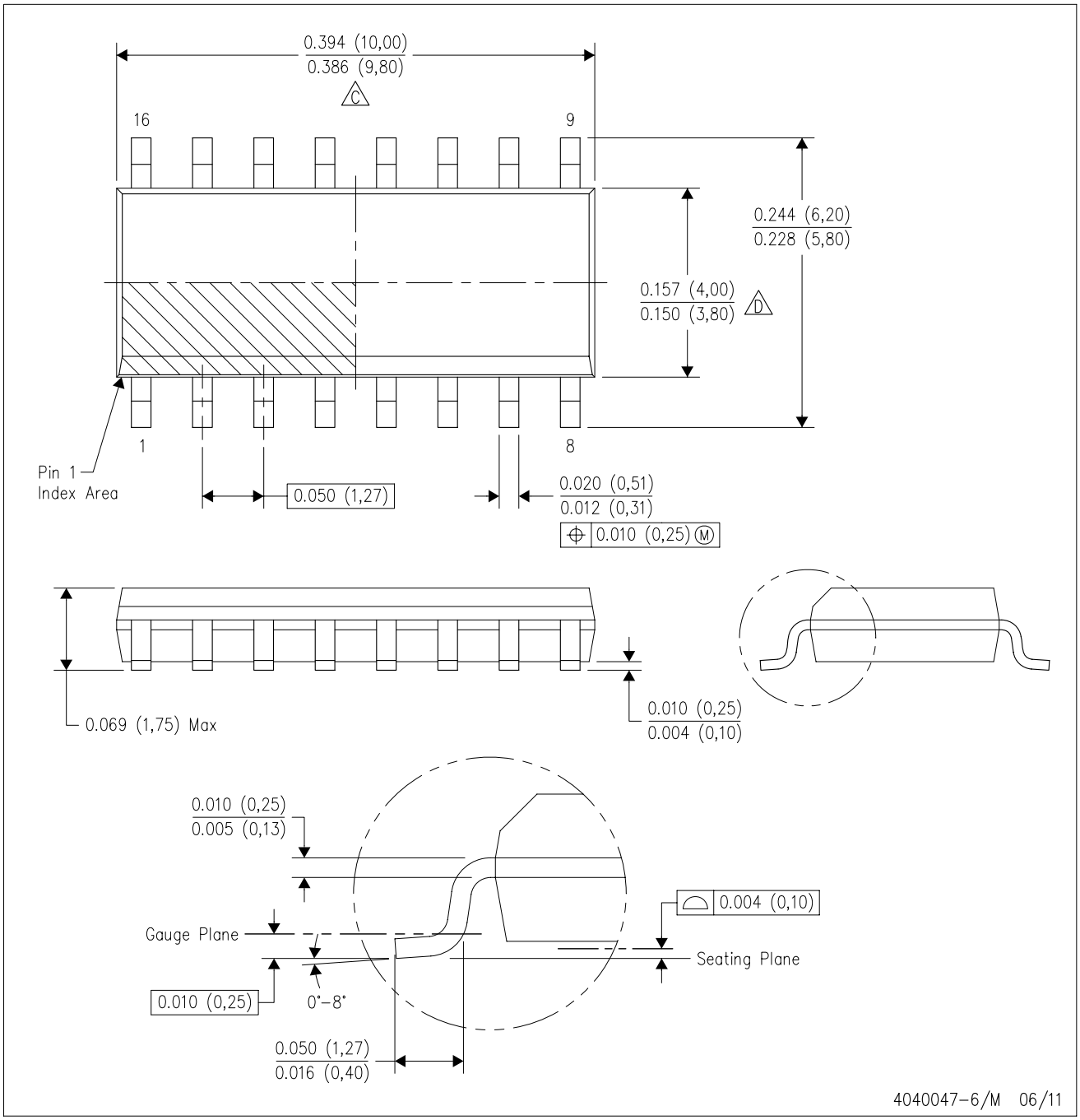

NOTES:
A. All linear dimensions are in inches (millimeters).
B. This drawing is subject to change without notice.
C. Body length does not include mold flash, protrusions, or gate burrs. Mold flash, protrusions, or gate burrs shall not exceed 0.006 (0,15) each side.
D. Body width does not include interlead flash. Interlead flash shall not exceed 0.017 (0,43) each side.
E. Reference JEDEC MS–012 variation AC.

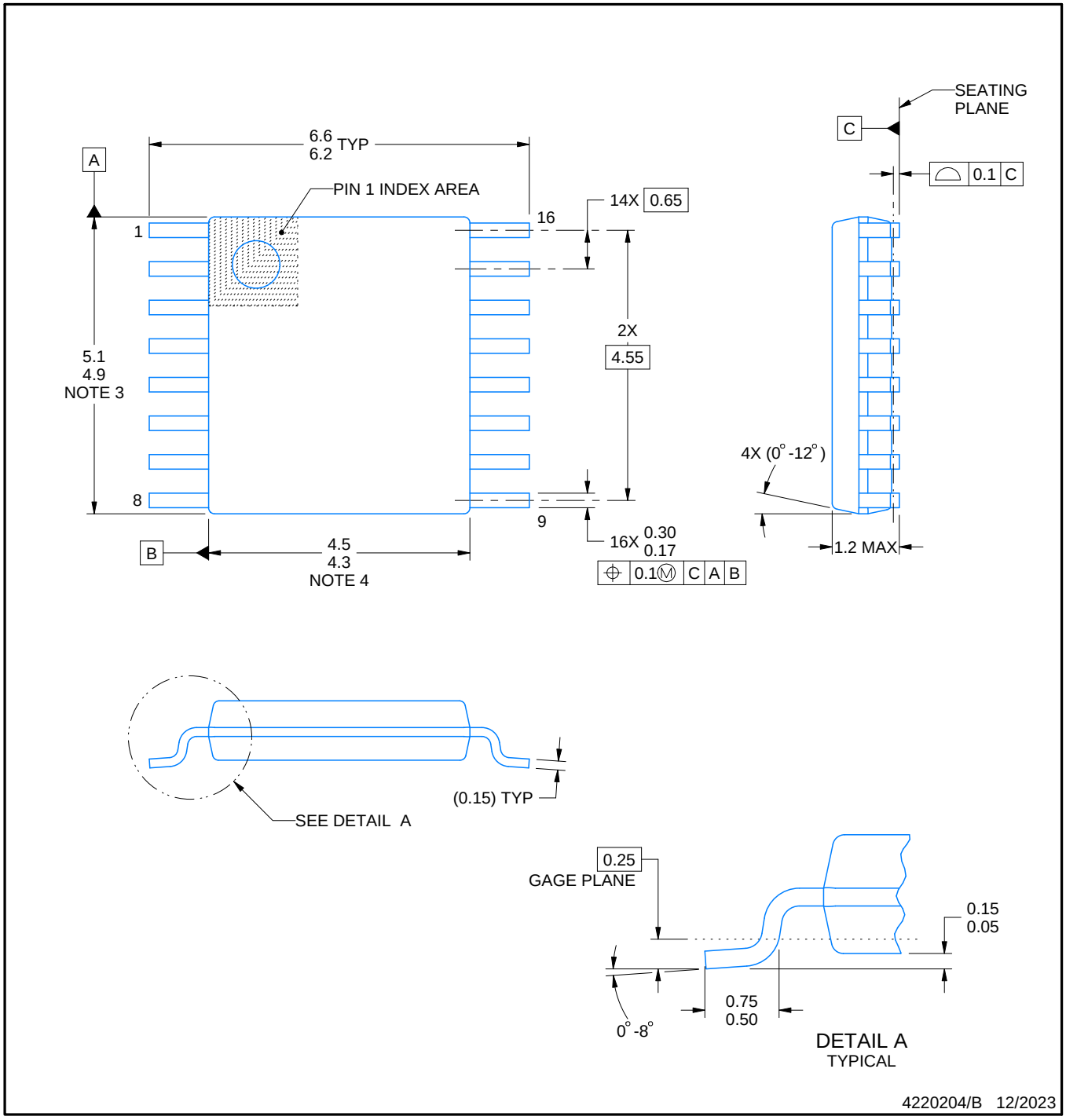

NOTES:

1. All linear dimensions are in millimeters. Any dimensions in parenthesis are for reference only. Dimensioning and tolerancing per ASME Y14.5M.
2. This drawing is subject to change without notice.
3. This dimension does not include mold flash, protrusions, or gate burrs. Mold flash, protrusions, or gate burrs shall not exceed 0.15 mm per side.
4. This dimension does not include interlead flash. Interlead flash shall not exceed 0.25 mm per side.
5. Reference JEDEC registration MO-153.

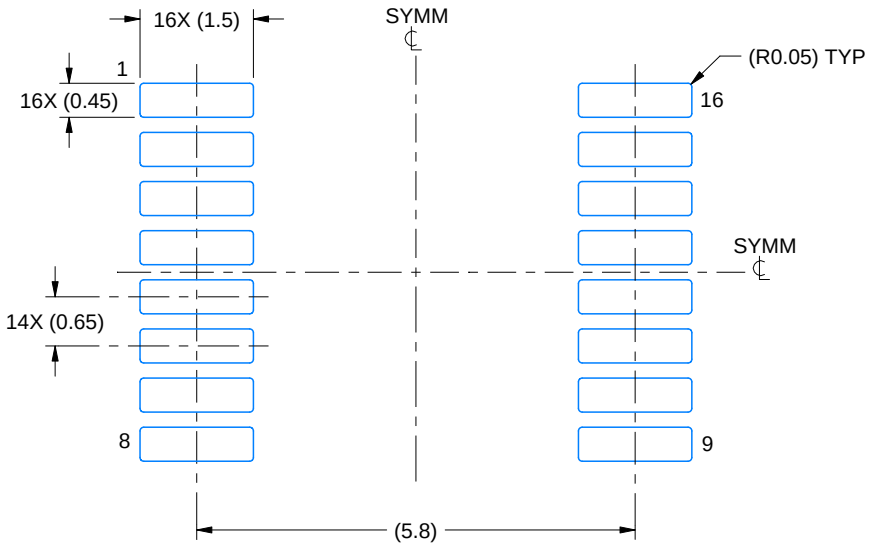

LAND PATTERN EXAMPLE
EXPOSED METAL SHOWN
SCALE: 10X

NON-SOLDER MASK DEFINED (PREFERRED)

SOLDER MASK DEFINED

SOLDER MASK DETAILS

4220204/B 12/2023

NOTES: (continued)

6. Publication IPC-7351 may have alternate designs.
7. Solder mask tolerances between and around signal pads can vary based on board fabrication site.

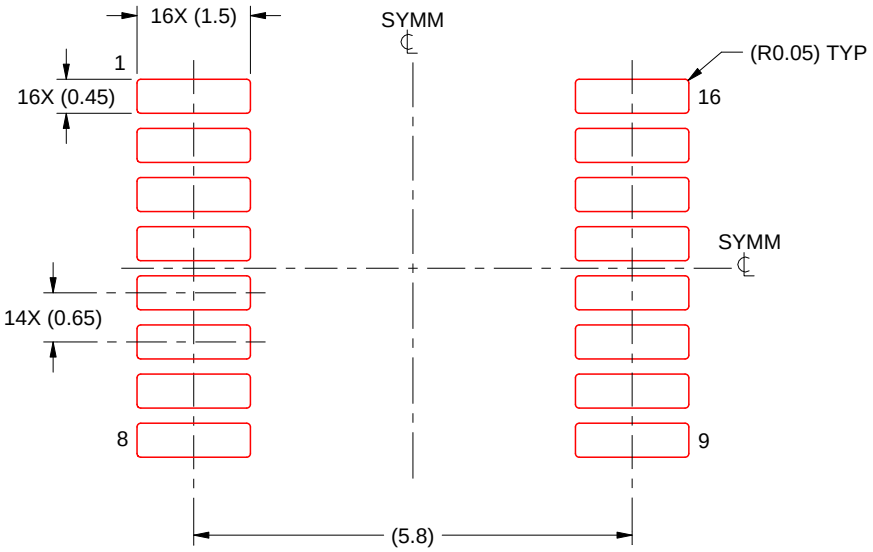

SOLDER PASTE EXAMPLE
BASED ON 0.125 mm THICK STENCIL
SCALE: 10X

4220204/B 12/2023

NOTES: (continued)

8. Laser cutting apertures with trapezoidal walls and rounded corners may offer better paste release. IPC-7525 may have alternate design recommendations.
9. Board assembly site may have different recommendations for stencil design.

IMPORTANT NOTICE AND DISCLAIMER

TI PROVIDES TECHNICAL AND RELIABILITY DATA (INCLUDING DATASHEETS), DESIGN RESOURCES (INCLUDING REFERENCE DESIGNS), APPLICATION OR OTHER DESIGN ADVICE, WEB TOOLS, SAFETY INFORMATION, AND OTHER RESOURCES “AS IS” AND WITH ALL FAULTS, AND DISCLAIMS ALL WARRANTIES, EXPRESS AND IMPLIED, INCLUDING WITHOUT LIMITATION ANY IMPLIED WARRANTIES OF MERCHANTABILITY, FITNESS FOR A PARTICULAR PURPOSE OR NON-INFRINGEMENT OF THIRD PARTY INTELLECTUAL PROPERTY RIGHTS.

These resources are intended for skilled developers designing with TI products. You are solely responsible for (1) selecting the appropriate TI products for your application, (2) designing, validating and testing your application, and (3) ensuring your application meets applicable standards, and any other safety, security, regulatory or other requirements.

These resources are subject to change without notice. TI grants you permission to use these resources only for development of an application that uses the TI products described in the resource. Other reproduction and display of these resources is prohibited. No license is granted to any other TI intellectual property right or to any third party intellectual property right. TI disclaims responsibility for, and you fully indemnify TI and its representatives against any claims, damages, costs, losses, and liabilities arising out of your use of these resources.

TI’s products are provided subject to TI’s Terms of Sale, TI’s General Quality Guidelines, or other applicable terms available either on ti.com or provided in conjunction with such TI products. TI’s provision of these resources does not expand or otherwise alter TI’s applicable warranties or warranty disclaimers for TI products. Unless TI explicitly designates a product as custom or customer-specified, TI products are standard, catalog, general purpose devices.

TI objects to and rejects any additional or different terms you may propose.

Copyright © 2026, Texas Instruments Incorporated

Last updated 10/2025