LMV321A-Q1, LMV358A-Q1, LMV324A-Q1 Automotive Low-Voltage Rail-to-Rail Output Operational Amplifiers

1 Features

- AEC-Q100 qualified for automotive applications
  - Temperature grade 1: –40°C to +125°C, TA
  - Device HBM ESD classification level 2
  - Device CDM ESD classification level C6
- Low input offset voltage: ±1 mV
- Rail-to-rail output
- Unity-gain bandwidth: 1 MHz
- Low broadband noise: 30 nV/√Hz
- Low input bias current: 10 pA
- Low quiescent current: 70 µA/Ch
- Unity-gain stable
- Internal RFI and EMI filter
- Operational at supply voltages as low as 2.5 V
- Easier to stabilize with higher capacitive load due to resistive open-loop output impedance
- Extended temperature range: –40°C to 125°C

2 Applications

- Optimized for AEC-Q100 grade 1 applications
- Infotainment and cluster
- Passive safety
- Body electronics and lighting
- HEV/EV inverter and motor control
- On-board (OBC) and wireless charger
- Powertrain current sensor
- Advanced driver assistance systems (ADAS)
- Single-supply, low-side, unidirectional current-sensing circuit

3 Description

The LMV3xxA-Q1 family includes single (LMV321A-Q1), dual (LMV358A-Q1), and quad-channel (LMV324A-Q1) low-voltage (2.5 V to 5.5 V) automotive operational amplifiers (op amps) with rail-to-rail output swing capabilities. These op amps provide a cost-effective method for space-constrained applications such as infotainment and lighting where low-voltage operation and high capacitive-load drive are required. The capacitive-load drive of the LMV3xxA-Q1 family is 500 pF, and the resistive open-loop output impedance makes stabilization easier with much higher capacitive loads. These op amps are designed specifically for low-voltage operation (2.5 V to 5.5 V) with performance specifications similar to the LMV3xx-Q1 devices.

The robust design of the LMV3xxA-Q1 family simplifies circuit design. The op amps feature unity-gain stability, an integrated RFI and EMI rejection filter, and no-phase reversal in overdrive conditions.

The LMV3xxA-Q1 family is available in industry-standard packages such as SOIC, MSOP, SOT-23, and TSSOP packages.

Package Information(1)

PART NUMBER	PACKAGE	BODY SIZE (NOM)
LMV321A-Q1	DBV (SOT-23, 5)	1.60 mm × 2.90 mm
	DCK (SC70, 5)	1.25 mm × 2.00 mm
LMV358A-Q1	D (SOIC, 8)	3.91 mm × 4.90 mm
	DGK (VSSOP, 8)	3.00 mm × 3.00 mm
LMV324A-Q1	D (SOIC, 14)	8.65 mm × 3.91 mm
	PW (TSSOP, 14)	4.40 mm × 5.00 mm
	DYY (SOT-23, 14)	4.20 mm × 1.90 mm

(1) For all available packages, see the orderable addendum at the end of the data sheet.

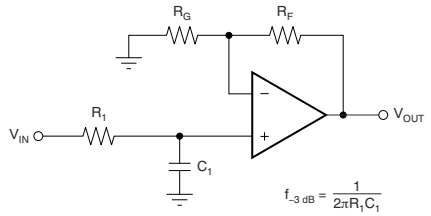

$$\frac{V_{OUT}}{V_{IN}} = \left(1 + \frac{R_F}{R_G}\right)\left(\frac{1}{1 + sR_1C_1}\right)$$

Single-Pole, Low-Pass Filter

An IMPORTANT NOTICE at the end of this data sheet addresses availability, warranty, changes, use in safety-critical applications, intellectual property matters and other important disclaimers. PRODUCTION DATA.

Table of Contents

1 Features....1
2 Applications....1
3 Description....1
4 Revision History....2
5 Pin Configuration and Functions....3
6 Specifications....5
6.1 Absolute Maximum Ratings....5
6.2 ESD Ratings....5
6.3 Recommended Operating Conditions....5
6.4 Thermal Information: LMV321A-Q1....6
6.5 Thermal Information: LMV358A-Q1....6
6.6 Thermal Information: LMV324A-Q1....6
6.7 Electrical Characteristics....7
6.8 Typical Characteristics....8
7 Detailed Description....14
7.1 Overview....14
7.2 Functional Block Diagram....14
7.3 Feature Description....15
7.4 Device Functional Modes....15
8 Application and Implementation....16
8.1 Application Information....16
8.2 Typical Application....16
9 Power Supply Recommendations....21
9.1 Input and ESD Protection....21
10 Layout....22
10.1 Layout Guidelines....22
10.2 Layout Example....22
11 Device and Documentation Support....23
11.1 Documentation Support....23
11.2 Receiving Notification of Documentation Updates....23
11.3 Support Resources....23
11.4 Trademarks....23
11.5 Electrostatic Discharge Caution....23
11.6 Glossary....23
12 Mechanical, Packaging, and Orderable Information....23

4 Revision History

NOTE: Page numbers for previous revisions may differ from page numbers in the current version.

Changes from Revision C (January 2023) to Revision D (April 2023)	Page
• Changed the status of the DBV package from: *preview* to: *active*	1

Changes from Revision B (October 2021) to Revision C (January 2023)	Page
• Deleted preview note from the SC70 (5) packages in *Device Information* table	1
• Changed the formatting of the *Pin Configuration and Functions* section	3
• Changed values in *Thermal Information: LMV321A-Q1* table	6

Changes from Revision A (April 2021) to Revision B (October 2021)	Page
• Added LMV321A-Q1 GPN to the data sheet	1
• Added SOT-23 (5) and SC70 (5) packages in *Device Information* table	1
• Deleted preview note from SOT-23 (14) and TSSOP (14) packages in *Device Information* table	1
• Added LMV321A-Q1 SOT-23 (5), SC70 (5), and LMV321AU-Q1 SOT-23 (5) Packages, to *Pin Configuration and Functions* section	3
• Added *Thermal Information: LMV321A-Q1* table	6

Changes from Revision * (June 2020) to Revision A (April 2021)	Page
• Updated the numbering format for tables, figures and cross-references throughout the document	1
• Deleted preview note from VSSOP (8) package in *Device Information* table	1
• Deleted SOT-23 (8), TSSOP (8), SOT-23 (5), and SC70 (5) packages from *Device Information* table	1
• Deleted TSSOP (8) Package, from *Pin Configuration and Functions* section	3
• Added note (4) to differential input voltage in *Absolute Maximum Ratings* table	5
• Added thermal information for DGK package	6
• Added thermal information for DYY package	6

Copyright © 2023 Texas Instruments Incorporated

5 Pin Configuration and Functions

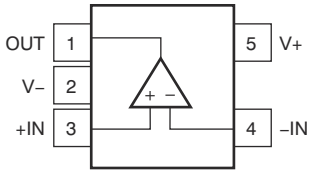

Figure 5-1. LMV321A-Q1 DBV Package, 5-Pin SOT-23 (Top View)

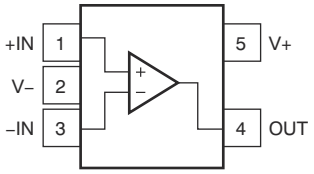

Figure 5-2. LMV321A-Q1 DCK, LMV321AU-Q1 DBV Package, 5-Pin SC70, SOT-23 (Top View)

Table 5-1. Pin Functions: LMV321A-Q1

PIN			TYPE (1)	DESCRIPTION
NAME	DBV	DCK, DBV (U)		
–IN	4	3	I	Inverting input
+IN	3	1	I	Non-inverting input
OUT	1	4	O	Output
V–	2	2	—	Negative (lowest) supply or ground (for single-supply operation)
V+	5	5	—	Positive (highest) supply

(1) I = input, O = output

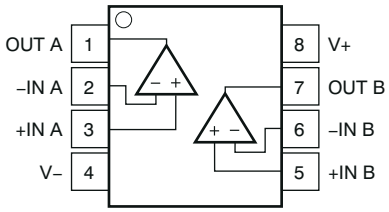

Figure 5-3. LMV358A-Q1 D and DGK Packages, 8-Pin SOIC and VSSOP (Top View)

Table 5-2. Pin Functions: LMV358A-Q1

PIN		TYPE(1)	DESCRIPTION
NAME	NO.		
–IN A	2	I	Inverting input, channel A
+IN A	3	I	Non-inverting input, channel A
–IN B	6	I	Inverting input, channel B
+IN B	5	I	Non-inverting input, channel B
OUT A	1	O	Output, channel A
OUT B	7	O	Output, channel B
V–	4	—	Negative (lowest) supply or ground (for single-supply operation)
V+	8	—	Positive (highest) supply

(1) I = input, O = output

Copyright © 2023 Texas Instruments Incorporated

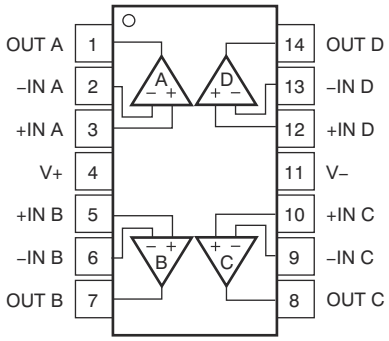

Figure 5-4. LMV324A-Q1 D, PW, and DYY Packages, 14-Pin SOIC, TSSOP, and SOT-23 (Top View)

Table 5-3. Pin Functions: LMV324A-Q1

PIN		TYPE(1)	DESCRIPTION
NAME	NO.		
–IN A	2	I	Inverting input, channel A
+IN A	3	I	Non-inverting input, channel A
–IN B	6	I	Inverting input, channel B
+IN B	5	I	Non-inverting input, channel B
–IN C	9	I	Inverting input, channel C
+IN C	10	I	Non-inverting input, channel C
–IN D	13	I	Inverting input, channel D
+IN D	12	I	Non-inverting input, channel D
OUT A	1	O	Output, channel A
OUT B	7	O	Output, channel B
OUT C	8	O	Output, channel C
OUT D	14	O	Output, channel D
V–	11	—	Negative (lowest) supply or ground (for single-supply operation)
V+	4	—	Positive (highest) supply

(1) I = input, O = output

Copyright © 2023 Texas Instruments Incorporated

6 Specifications

6.1 Absolute Maximum Ratings

over operating temperature range (unless otherwise noted)[1]

			MIN	MAX	UNIT
Supply voltage, ([V+] – [V–])			0	6	V
Signal input pins	Voltage[2]	Common-mode	(V–) – 0.5	(V+) + 0.5	V
		Differential[4]		(V+) – (V–) + 0.2	V
	Current[2]		–10	10	mA
Output short-circuit[3]			Continuous		
Operating, T_A			–55	150	°C
Operating junction temperature, T_J				150	°C
Storage temperature, T_{stg}			–65	150	°C

(1) Stresses beyond those listed under *Absolute Maximum Ratings* may cause permanent damage to the device. These are stress ratings only, and functional operation of the device at these or any other conditions beyond those indicated under *Recommended Operating Conditions* is not implied. Exposure to absolute-maximum-rated conditions for extended periods may affect device reliability.
(2) Input pins are diode-clamped to the power-supply rails. Input signals that may swing more than 0.5 V beyond the supply rails must be current limited to 10 mA or less.
(3) Short-circuit to ground, one amplifier per package.
(4) Differential input voltages greater than 0.5 V applied continuously can result in a shift to the input offset voltage and quiescent current above the maximum specifications of these parameters. The magnitude of this effect increases as the ambient operating temperature rises.

6.2 ESD Ratings

			VALUE	UNIT
$V_{(ESD)}$	Electrostatic discharge	Human-body model (HBM), per AEC Q100-002 HBM ESD Classification Level 2[1]	±2000	V
		Charged-device model (CDM), per AEC Q100-011 CDM ESD Classification Level C5	±1000	

(1) AEC Q100-002 indicates that HBM stressing shall be in accordance with ANSI/ESDA/JEDEC JS-001 Specification

6.3 Recommended Operating Conditions

over operating temperature range (unless otherwise noted)

		MIN	MAX	UNIT
V_S	Supply voltage	2.5	5.5	V
T_A	Specified temperature	–40	125	°C

6.4 Thermal Information: LMV321A-Q1

THERMAL METRIC[1]		LMV321A-Q1		UNIT
		DBV (SOT-23)	DCK (SC70)	
		5 PINS	5 PINS	
$R_{\theta JA}$	Junction-to-ambient thermal resistance	232.5	246.6	°C/W
$R_{\theta JC(top)}$	Junction-to-case (top) thermal resistance	131.0	157.5	°C/W
$R_{\theta JB}$	Junction-to-board thermal resistance	99.6	95.4	°C/W
ψ_{JT}	Junction-to-top characterization parameter	66.5	68.8	°C/W
ψ_{JB}	Junction-to-board characterization parameter	99.1	95.0	°C/W

(1) For more information about traditional and new thermal metrics, see *Semiconductor and IC Package Thermal Metrics*.

6.5 Thermal Information: LMV358A-Q1

THERMAL METRIC[1]		LMV358A-Q1		UNIT
		D (SOIC)	DGK (VSSOP)	
		8 PINS	8 PINS	
$R_{\theta JA}$	Junction-to-ambient thermal resistance	151.9	196.6	°C/W
$R_{\theta JC(top)}$	Junction-to-case (top) thermal resistance	92.0	86.2	°C/W
$R_{\theta JB}$	Junction-to-board thermal resistance	95.4	118.3	°C/W
ψ_{JT}	Junction-to-top characterization parameter	40.2	23.2	°C/W
ψ_{JB}	Junction-to-board characterization parameter	94.7	116.7	°C/W

(1) For more information about traditional and new thermal metrics, see *Semiconductor and IC Package Thermal Metrics*.

6.6 Thermal Information: LMV324A-Q1

THERMAL METRIC[1]		LMV324A-Q1			UNIT
		D (SOIC)	PW (TSSOP)	DYY (SOT-23)	
		14 PINS	14 PINS	14 PINS	
$R_{\theta JA}$	Junction-to-ambient thermal resistance	115.1	135.3	154.3	°C/W
$R_{\theta JC(top)}$	Junction-to-case (top) thermal resistance	71.2	63.5	86.8	°C/W
$R_{\theta JB}$	Junction-to-board thermal resistance	71.1	78.4	67.9	°C/W
ψ_{JT}	Junction-to-top characterization parameter	29.6	13.6	10.1	°C/W
ψ_{JB}	Junction-to-board characterization parameter	70.7	77.9	67.5	°C/W

Copyright © 2023 Texas Instruments Incorporated

6.7 Electrical Characteristics

For V_S = (V+) – (V–) = 2.5 V to 5.5 V (±0.9 V to ±2.75 V), T_A = 25°C, R_L = 10 kΩ connected to V_S / 2, and V_{CM} = V_{OUT} = V_S / 2 (unless otherwise noted)

PARAMETER		TEST CONDITIONS	MIN	TYP	MAX	UNIT
OFFSET VOLTAGE						
V_{OS}	Input offset voltage	Vs = 5 V		±1	±4	mV
		Vs = 5 V, T_A = –40°C to 125°C			±5	
dV_{OS}/dT	V_{OS} vs temperature	T_A = –40°C to 125°C		±1		μV/°C
PSRR	Power-supply rejection ratio	V_S = 2.5 to 5.5 V, V_{CM} = (V–)	78	100		dB
INPUT VOLTAGE RANGE						
V_{CM}	Common-mode voltage range	No phase reversal, rail-to-rail input	(V–) – 0.1		(V+) – 1	V
CMRR	Common-mode rejection ratio	V_S = 2.5 V, (V–) – 0.1 V < V_{CM} < (V+) – 1.4 V T_A = –40°C to 125°C		86		dB
		V_S = 5.5 V, (V–) – 0.1 V < V_{CM} < (V+) – 1.4 V T_A = –40°C to 125°C		95		
		V_S = 5.5 V, (V–) – 0.1 V < V_{CM} < (V+) + 0.1 V T_A = –40°C to 125°C	63	77		
		V_S = 2.5 V, (V–) – 0.1 V < V_{CM} < (V+) + 0.1 V T_A = –40°C to 125°C		68		
INPUT BIAS CURRENT						
I_B	Input bias current	Vs = 5 V		±10		pA
I_{OS}	Input offset current			±3		pA
NOISE						
E_n	Input voltage noise (peak-to-peak)	f = 0.1 Hz to 10 Hz, Vs = 5 V		5.1		$μV_{PP}$
e_n	Input voltage noise density	f = 1 kHz, Vs = 5 V		33		nV/√Hz
		f = 10 kHz, Vs = 5 V		30		
i_n	Input current noise density	f = 1 kHz, Vs = 5 V		25		fA/√Hz
INPUT CAPACITANCE						
C_{ID}	Differential			1.5		pF
C_{IC}	Common-mode			5		pF
OPEN-LOOP GAIN						
A_{OL}	Open-loop voltage gain	V_S = 5.5 V, (V–) + 0.05 V < V_O < (V+) – 0.05 V, R_L = 10 kΩ	100	115		dB
		V_S = 2.5 V, (V–) + 0.04 V < V_O < (V+) – 0.04 V, R_L = 10 kΩ		98		
		V_S = 2.5 V, (V–) + 0.1 V < V_O < (V+) – 0.1 V, R_L = 2 kΩ		112		
		V_S = 5.5 V, (V–) + 0.15 V < V_O < (V+) – 0.15 V, R_L = 2 kΩ		128		
FREQUENCY RESPONSE						
GBW	Gain-bandwidth product	Vs = 5 V		1		MHz
$φ_m$	Phase margin	V_S = 5.5 V, G = 1		76		°
SR	Slew rate	Vs = 5 V		1.7		V/μs
t_S	Settling time	To 0.1%, V_S = 5 V, 2-V step , G = +1, C_L = 100 pF		3		μs
		To 0.01%, V_S = 5 V, 2-V step , G = +1, C_L = 100 pF		4		
t_{OR}	Overload recovery time	V_S = 5 V, V_{IN} × gain > V_S		0.9		μs
THD+N	Total harmonic distortion + noise	V_S = 5.5 V, V_{CM} = 2.5 V, V_O = 1 V_{RMS}, G = +1, f = 1 kHz, 80-kHz measurement BW		0.005%		
OUTPUT						
V_O	Voltage output swing from supply rails	V_S = 5.5 V, R_L = 10 kΩ		20	50	mV
		V_S = 5.5 V, R_L = 2 kΩ		40	75	
I_{SC}	Short-circuit current	Vs = 5.5 V		±40		mA
Z_O	Open-loop output impedance	Vs = 5 V, f = 1 MHz		1200		Ω
POWER SUPPLY						
V_S	Specified voltage range		2.5 (±1.25)		5.5 (±2.75)	V
I_Q	Quiescent current per amplifier	I_O = 0 mA, V_S = 5.5 V		70	125	μA
		I_O = 0 mA, V_S = 5.5 V, T_A = –40°C to 125°C			150	
	Power-on time	V_S = 0 V to 5 V, to 90% I_Q level		50		μs

Copyright © 2023 Texas Instruments Incorporated

6.8 Typical Characteristics

at T_A = 25°C, V+ = 2.75 V, V– = –2.75 V, R_L = 10 kΩ connected to V_S / 2, V_{CM} = V_S / 2, and V_{OUT} = V_S / 2 (unless otherwise noted)

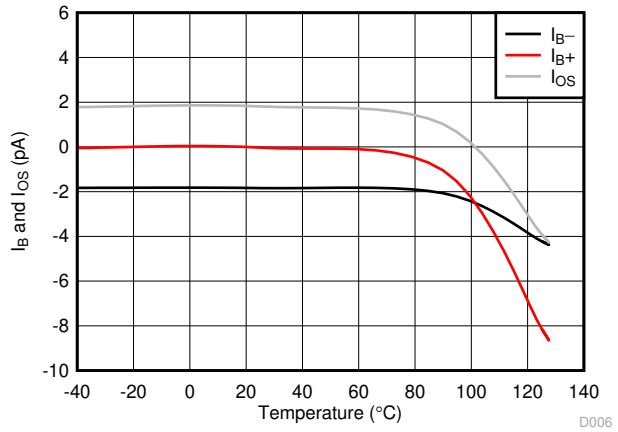

Figure 6-1. I_B and I_{OS} vs Temperature

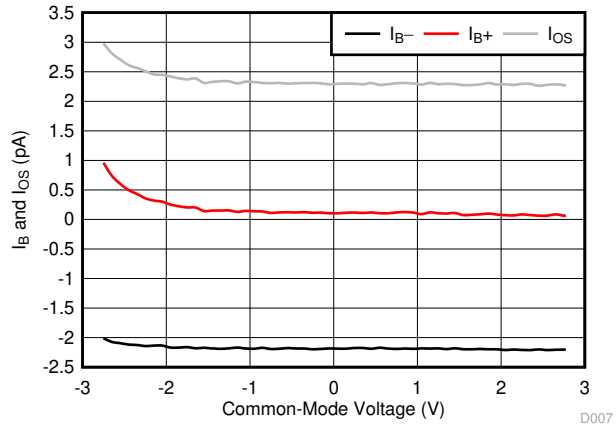

Figure 6-2. I_B and I_{OS} vs Common-Mode Voltage

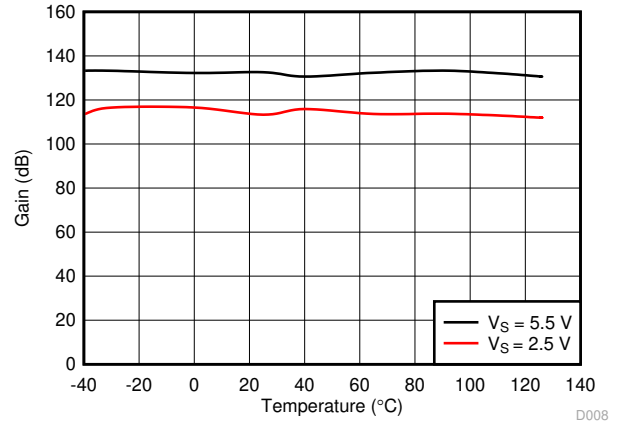

Figure 6-3. Open-Loop Gain vs Temperature

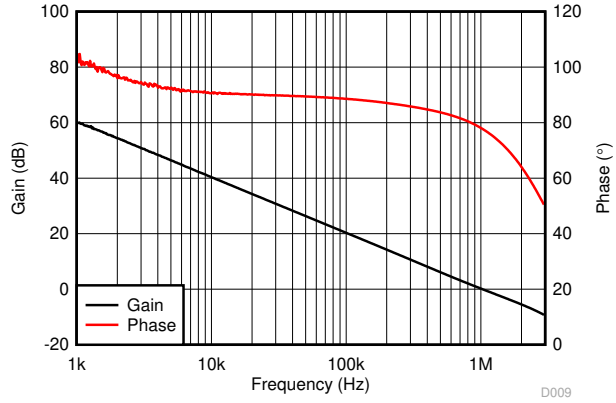

C_L = 10 pF

Figure 6-4. Open-Loop Gain and Phase vs Frequency

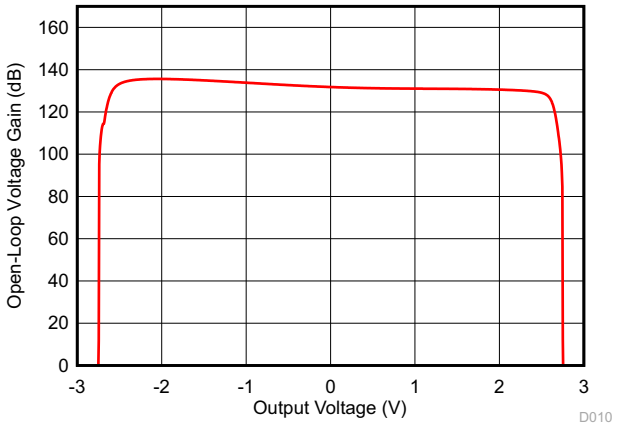

Figure 6-5. Open-Loop Gain vs Output Voltage

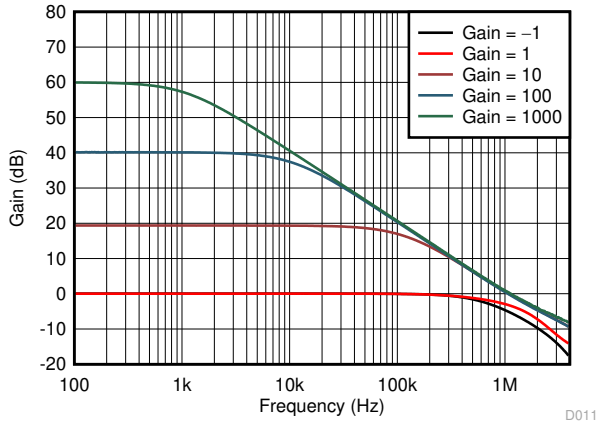

C_L = 10 pF

Figure 6-6. Closed-Loop Gain vs Frequency

Copyright © 2023 Texas Instruments Incorporated

6.8 Typical Characteristics (continued)

at T_A = 25°C, V+ = 2.75 V, V– = –2.75 V, R_L = 10 kΩ connected to V_S / 2, V_{CM} = V_S / 2, and V_{OUT} = V_S / 2 (unless otherwise noted)

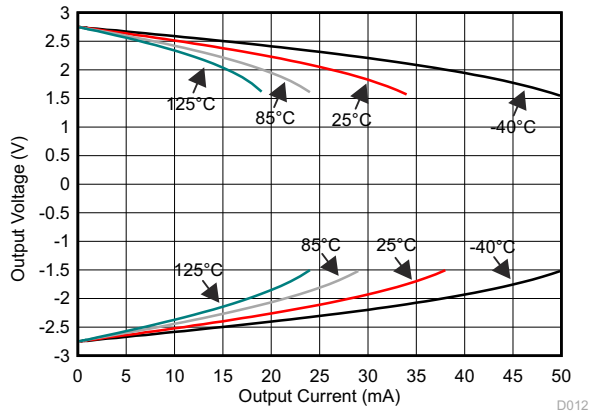

Figure 6-7. Output Voltage vs Output Current (Claw)

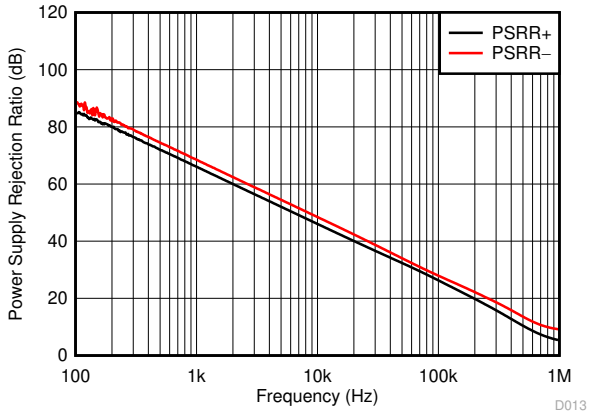

Figure 6-8. PSRR vs Frequency

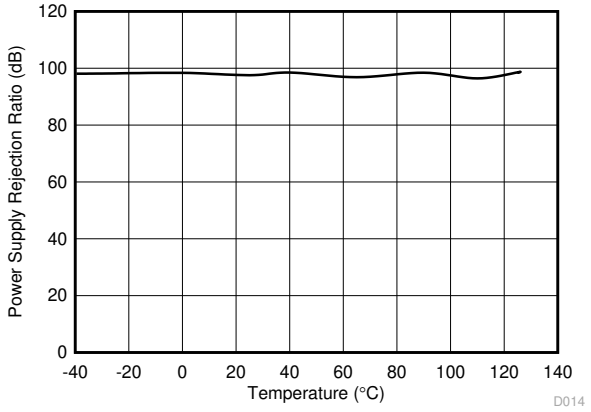

V_S = 1.8 V to 5.5 V

Figure 6-9. DC PSRR vs Temperature

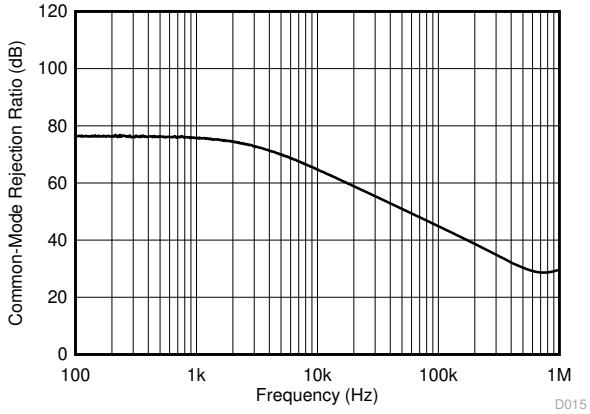

Figure 6-10. CMRR vs Frequency

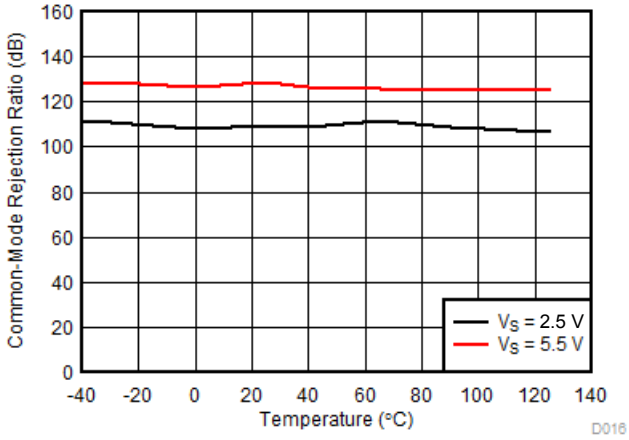

V_{CM} = (V–) – 0.1 V to (V+) – 1.4 V

Figure 6-11. DC CMRR vs Temperature

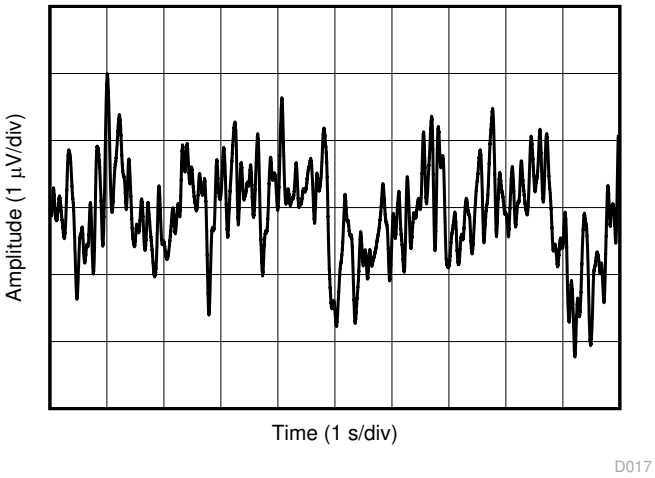

Figure 6-12. 0.1 Hz to 10 Hz Integrated Voltage Noise

6.8 Typical Characteristics (continued)

at T_A = 25°C, V+ = 2.75 V, V– = –2.75 V, R_L = 10 kΩ connected to V_S / 2, V_{CM} = V_S / 2, and V_{OUT} = V_S / 2 (unless otherwise noted)

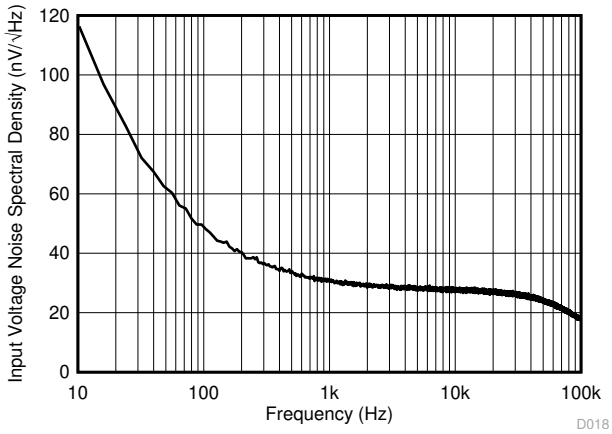

Figure 6-13. Input Voltage Noise Spectral Density

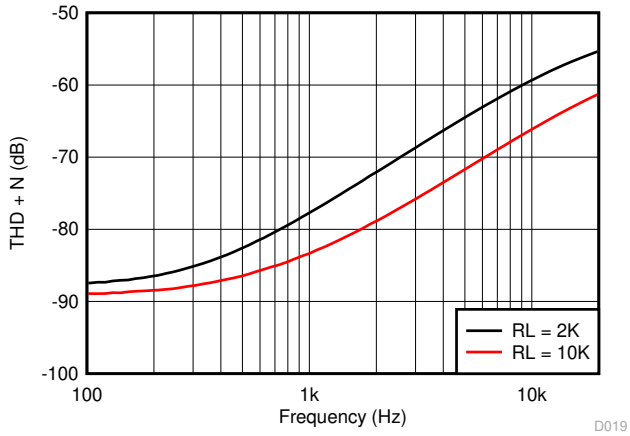

V_S = 5.5 V, V_{CM} = 2.5 V, G = 1, BW = 80 kHz, V_{OUT} = 0.5 V_{RMS}

Figure 6-14. THD + N vs Frequency

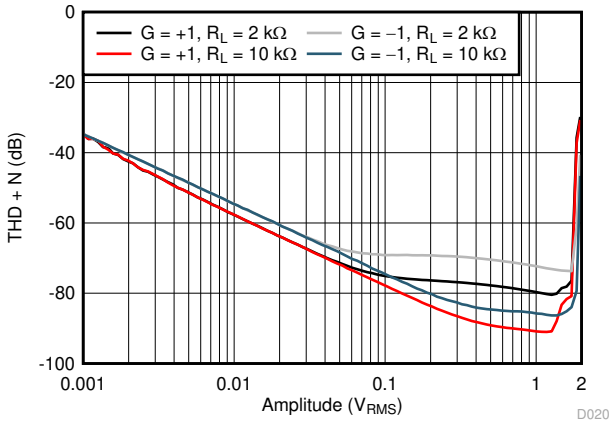

V_S = 5.5 V, V_{CM} = 2.5 V, f = 1 kHz, G = 1, BW = 80 kHz

Figure 6-15. THD + N vs Amplitude

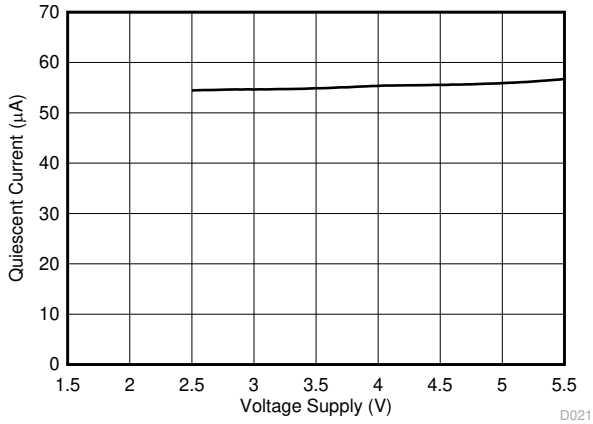

Figure 6-16. Quiescent Current vs Supply Voltage

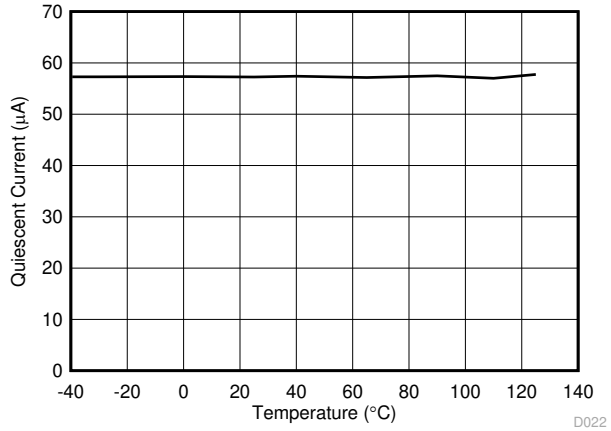

Figure 6-17. Quiescent Current vs Temperature

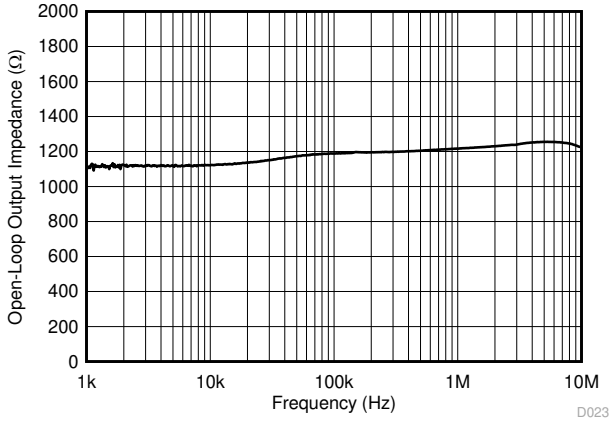

Figure 6-18. Open-Loop Output Impedance vs Frequency

Copyright © 2023 Texas Instruments Incorporated

6.8 Typical Characteristics (continued)

at T_A = 25°C, V+ = 2.75 V, V– = –2.75 V, R_L = 10 kΩ connected to V_S / 2, V_{CM} = V_S / 2, and V_{OUT} = V_S / 2 (unless otherwise noted)

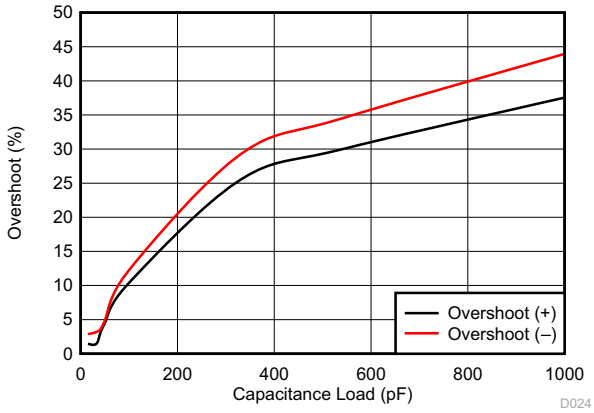

G = 1, V_{IN} = 100 mVpp

Figure 6-19. Small Signal Overshoot vs Capacitive Load

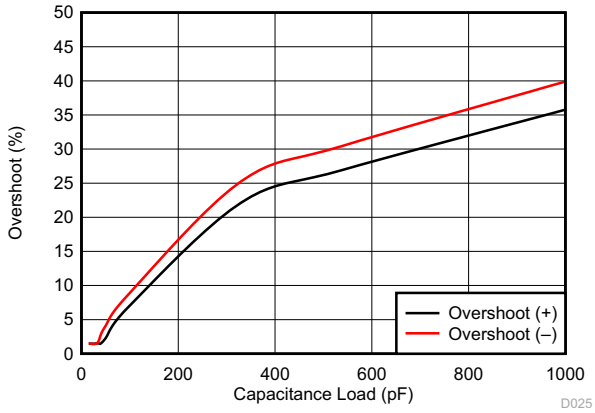

G = –1, V_{IN} = 100 mVpp

Figure 6-20. Small Signal Overshoot vs Capacitive Load

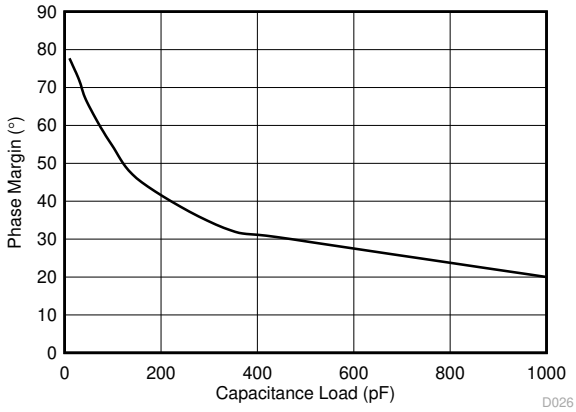

Figure 6-21. Phase Margin vs Capacitive Load

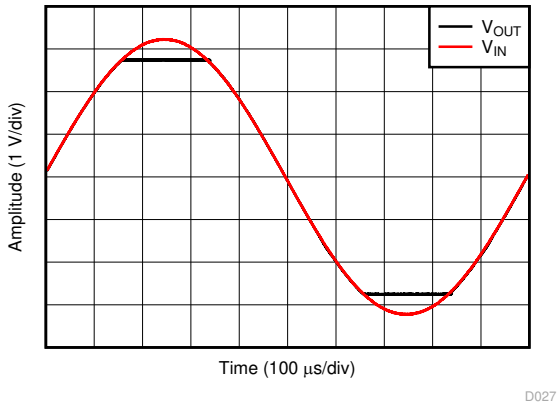

G = 1, V_{IN} = 6.5 V_{PP}

Figure 6-22. No Phase Reversal

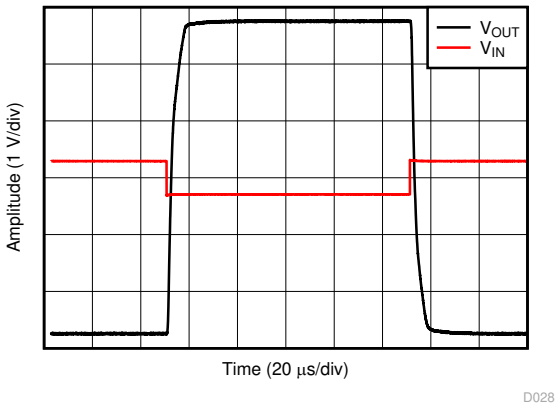

G = –10, V_{IN} = 600 mV_{PP}

Figure 6-23. Overload Recovery

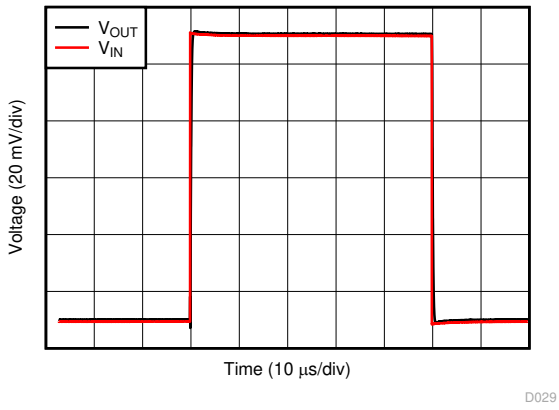

G = 1, V_{IN} = 100 mV_{PP}, C_L = 10 pF

Figure 6-24. Small-Signal Step Response

6.8 Typical Characteristics (continued)

at T_A = 25°C, V+ = 2.75 V, V– = –2.75 V, R_L = 10 kΩ connected to V_S / 2, V_{CM} = V_S / 2, and V_{OUT} = V_S / 2 (unless otherwise noted)

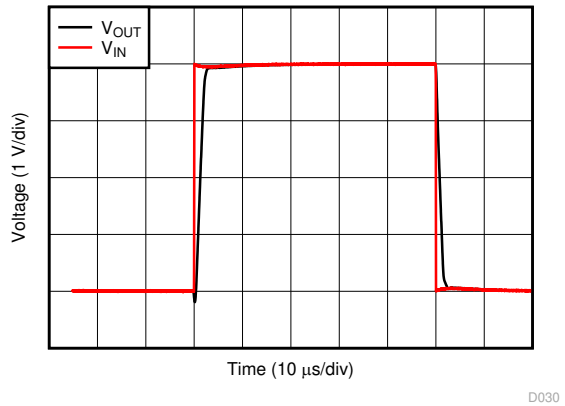

G = 1, V_{IN} = 4 V_{PP}, C_L = 10 pF

Figure 6-25. Large-Signal Step Response

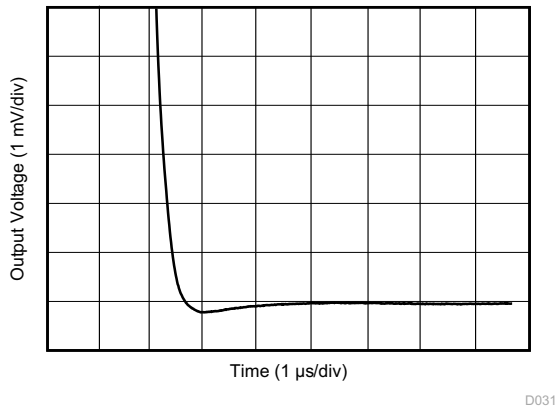

G = 1, C_L = 100 pF, 2-V step

Figure 6-26. Large-Large-Signal Settling Time (Negative)

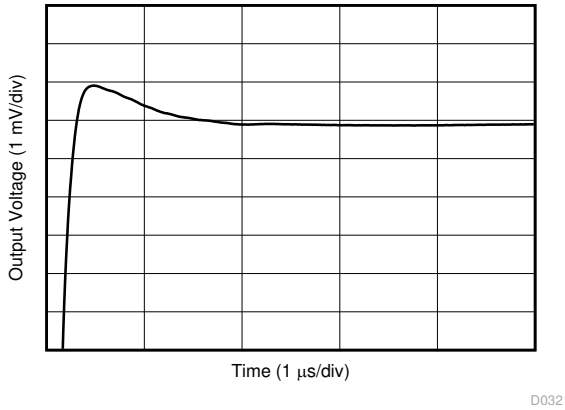

G = 1, C_L = 100 pF, 2-V step

Figure 6-27. Large-Signal Settling Time (Positive)

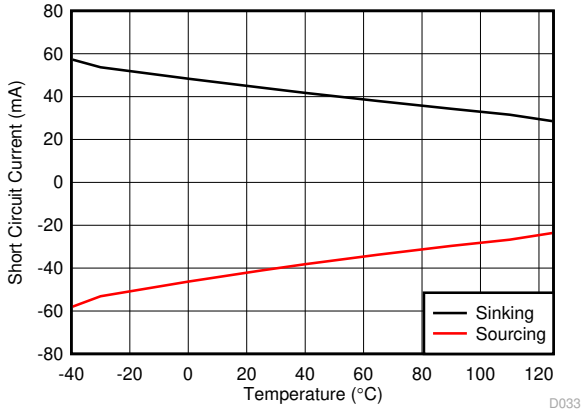

Figure 6-28. Short-Circuit Current vs Temperature

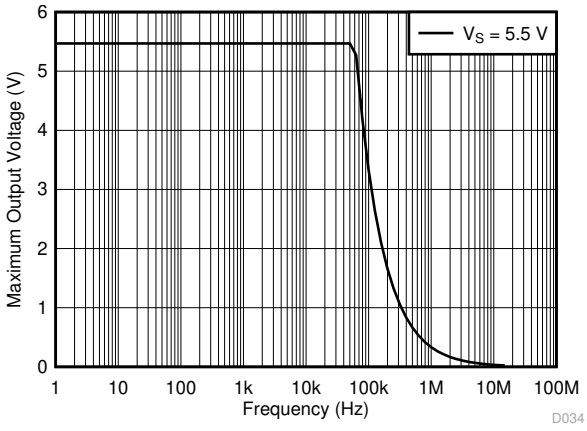

Figure 6-29. Maximum Output Voltage vs Frequency

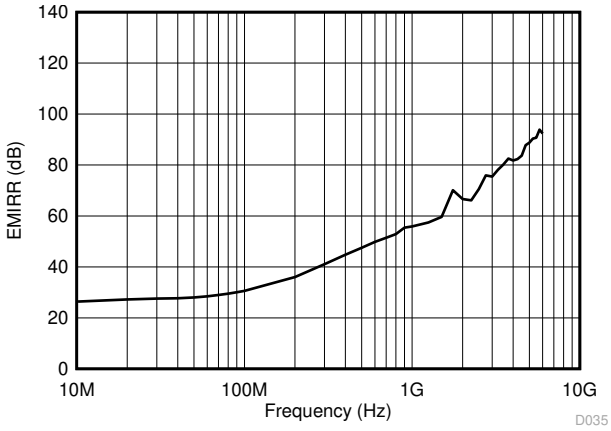

Figure 6-30. Electromagnetic Interference Rejection Ratio Referred to Non-inverting Input (EMIRR+) vs Frequency

Copyright © 2023 Texas Instruments Incorporated

6.8 Typical Characteristics (continued)

at T_A = 25°C, V+ = 2.75 V, V– = –2.75 V, R_L = 10 kΩ connected to V_S / 2, V_{CM} = V_S / 2, and V_{OUT} = V_S / 2 (unless otherwise noted)

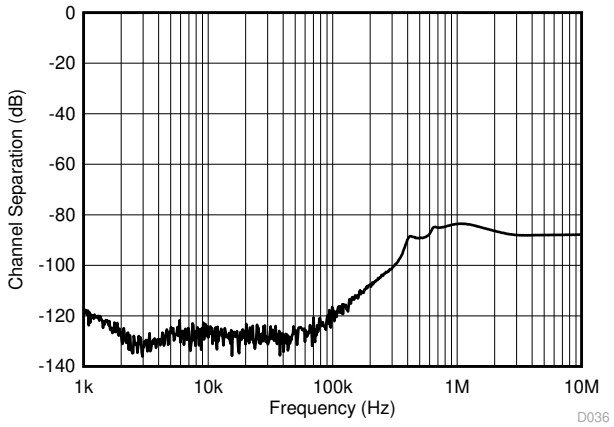

Figure 6-31. Channel Separation

7 Detailed Description

7.1 Overview

The LMV3xxA-Q1 is a family of low-power, rail-to-rail output op amps. These devices operate from 2.5 V to 5.5 V, are unity-gain stable, and are designed for a wide range of general-purpose applications. The input common-mode voltage range includes the negative rail and allows the LMV3xxA-Q1 family to be used in many single-supply applications. Rail-to-rail output swing significantly increases dynamic range, especially in low-supply applications, and makes the family of devices an excellent choice for driving sampling analog-to-digital converters (ADCs).

7.2 Functional Block Diagram

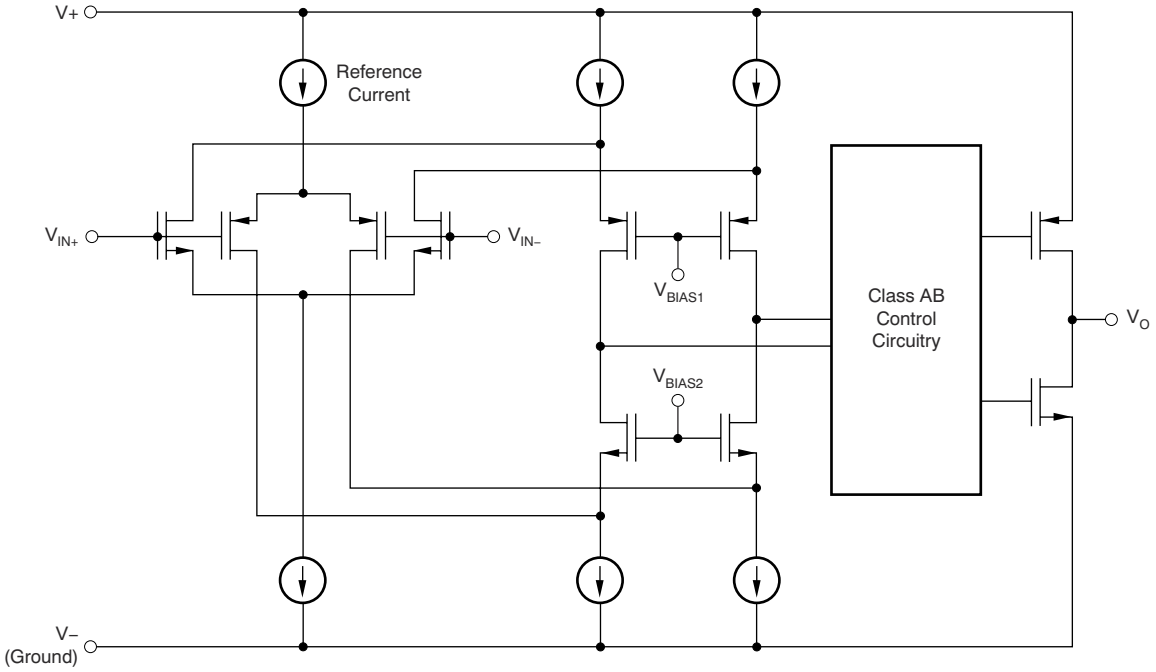

Copyright © 2023 Texas Instruments Incorporated

7.3 Feature Description

7.3.1 Operating Voltage

The LMV3xxA-Q1 family of op amps are for operation from 2.5 V to 5.5 V. In addition, many specifications such as input offset voltage, quiescent current, offset current, and short circuit current apply from –40°C to 125°C. Parameters that vary significantly with operating voltages or temperature are shown in the *Typical Characteristics* section.

7.3.2 Input Common Mode Range

The input common-mode voltage range of the LMV3xxA-Q1 family extends 100 mV beyond the negative supply rail and within 1 V below the positive rail for the full supply voltage range of 2.5 V to 5.5 V. This performance is achieved with a P-channel differential pair, as shown in the *Functional Block Diagram*. Additionally, a complementary N-channel differential pair has been included in parallel to eliminate issues with phase reversal that are common with previous generations of op amps. However, the N-channel pair is not optimized for operation. TI recommends limiting any voltages applied at the inputs to less than V_{CC} – 1 V to make sure that the op amp conforms to the specifications detailed in the *Electrical Characteristics* table.

7.3.3 Rail-to-Rail Output

Designed as a low-power, low-voltage operational amplifier, the LMV3xxA-Q1 family delivers a robust output drive capability. A class-AB output stage with common-source transistors achieves full rail-to-rail output swing capability. For resistive loads of 10 kΩ, the output swings to within 20 mV of either supply rail, regardless of the applied power-supply voltage. Different load conditions change the ability of the amplifier to swing close to the rails.

7.3.4 Overload Recovery

Overload recovery is defined as the time required for the operational amplifier output to recover from a saturated state to a linear state. The output devices of the operational amplifier enter a saturation region when the output voltage exceeds the rated operating voltage, because of the high input voltage or the high gain. After the device enters the saturation region, the charge carriers in the output devices require time to return to the linear state. After the charge carriers return to the linear state, the device begins to slew at the specified slew rate. Therefore, the propagation delay (in case of an overload condition) is the sum of the overload recovery time and the slew time. The overload recovery time for the LMV3xxA-Q1 family is approximately 850 ns.

7.4 Device Functional Modes

The LMV3xxA-Q1 family has a single functional mode. The devices are powered on as long as the power-supply voltage is between 2.5 V (±1.25 V) and 5.5 V (±2.75 V).

Copyright © 2023 Texas Instruments Incorporated

8 Application and Implementation

Note

Information in the following applications sections is not part of the TI component specification, and TI does not warrant its accuracy or completeness. TI's customers are responsible for determining suitability of components for their purposes, as well as validating and testing their design implementation to confirm system functionality.

8.1 Application Information

The LMV3xxA-Q1 family of low-power, rail-to-rail output operational amplifiers is specifically designed for portable applications. The devices operate from 2.5 V to 5.5 V, are unity-gain stable, and are designed for for a wide range of general-purpose applications. The class AB output stage is capable of driving less than or equal to 10-kΩ loads connected to any point between V+ and V–. The input common-mode voltage range includes the negative rail, and allows the LMV3xxA-Q1 devices to be used in many single-supply applications.

8.2 Typical Application

8.2.1 LMV3xxA-Q1 Low-Side, Current Sensing Application

Figure 8-1 shows the LMV3xxA-Q1 configured in a low-side current sensing application.

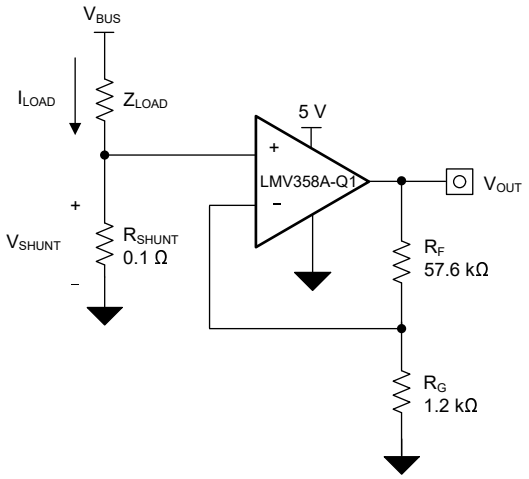

Figure 8-1. LMV3xxA-Q1 in a Low-Side, Current-Sensing Application

Copyright © 2023 Texas Instruments Incorporated

8.2.1.1 Design Requirements

The design requirements for this design are:

- Load current: 0 A to 1 A
- Output voltage: 4.9 V
- Maximum shunt voltage: 100 mV

8.2.1.2 Detailed Design Procedure

The transfer function of the circuit in Figure 8-1 is given in Equation 1.

$$V_{OUT} = I_{LOAD} \times R_{SHUNT} \times Gain \tag{1}$$

The load current (I_{LOAD}) produces a voltage drop across the shunt resistor (R_{SHUNT}). The load current is set from 0 A to 1 A. To keep the shunt voltage below 100 mV at maximum load current, the largest shunt resistor is shown using Equation 2.

$$R_{SHUNT} = \frac{V_{SHUNT_MAX}}{I_{LOAD_MAX}} = \frac{100\ mV}{1\ A} = 100\ m\Omega \tag{2}$$

Using Equation 2, R_{SHUNT} is calculated to be 100 mΩ. The voltage drop produced by I_{LOAD} and R_{SHUNT} is amplified by the LMV3xxA-Q1 to produce an output voltage of approximately 0 V to 4.9 V. The gain needed by the LMV3xxA-Q1 to produce the necessary output voltage is calculated using Equation 3.

$$Gain = \frac{(V_{OUT_MAX} - V_{OUT_MIN})}{(V_{IN_MAX} - V_{IN_MIN})} \tag{3}$$

Using Equation 3, the required gain is calculated to be 49 V/V, which is set with resistors R_F and R_G. Equation 4 sizes the resistors R_F and R_G, to set the gain of the LMV3xxA-Q1 to 49 V/V.

$$Gain = 1 + \frac{(R_F)}{(R_G)} \tag{4}$$

Selecting R_F as 57.6 kΩ and R_G as 1.2 kΩ provides a combination that equals 49 V/V. Figure 8-2 shows the measured transfer function of the circuit shown in Figure 8-1. Notice that the gain is only a function of the feedback and gain resistors. This gain is adjusted by varying the ratio of the resistors and the actual resistors values are determined by the impedance levels that the designer wants to establish. The impedance level determines the current drain, the effect that stray capacitance has, and a few other behaviors. There is no best impedance selection that works for every system, choose an impedance that is an excellent choice for the system parameters.

8.2.1.3 Application Curve

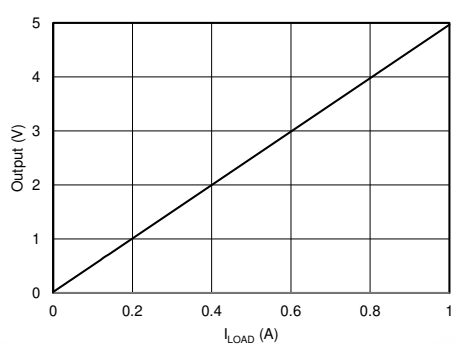

Figure 8-2. Low-Side, Current-Sense Transfer Function

8.2.2 Single-Supply Photodiode Amplifier

Photodiodes are used in many applications to convert light signals to electrical signals. The current through the photodiode is proportional to the photon energy absorbed, and is commonly in the range of a few hundred picoamps to a few tens of microamps. An amplifier in a transimpedance configuration is typically used to convert the low-level photodiode current to a voltage signal for processing in an MCU. The circuit shown in Figure 8-3 is an example of a single-supply photodiode amplifier circuit using the LMV358A-Q1.

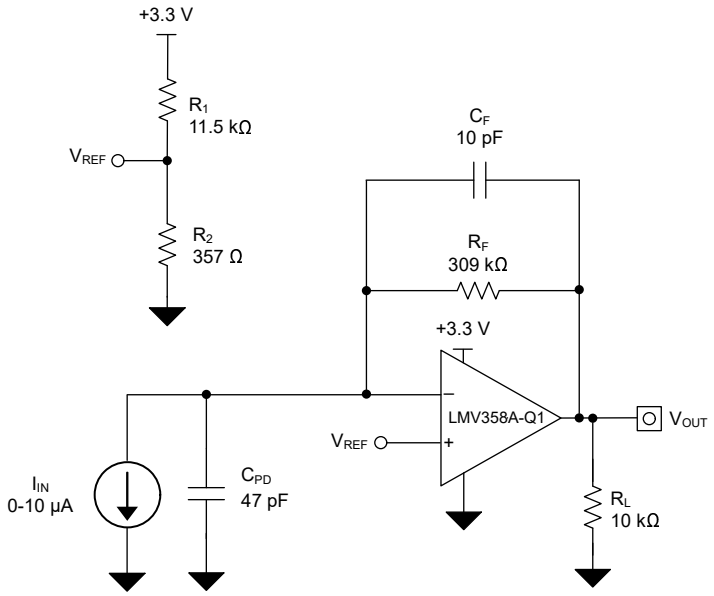

Figure 8-3. Single-Supply Photodiode Amplifier Circuit

Copyright © 2023 Texas Instruments Incorporated

8.2.2.1 Design Requirements

The design requirements for this design are:

- Supply voltage: 3.3 V
- Input: 0 µA to 10 µA
- Output: 0.1 V to 3.2 V
- Bandwidth: 50 kHz

8.2.2.2 Detailed Design Procedure

The transfer function between the output voltage (V_{OUT}), the input current, (I_{IN}) and the reference voltage (V_{REF}) is defined in Equation 5.

$$V_{OUT} = I_{IN} + R_F + V_{REF} \tag{5}$$

Where:

$$V_{REF} = V_+ \times \left(\frac{R_1 \times R_2}{R_1 + R_2}\right) \tag{6}$$

Set V_{REF} to 100 mV to meet the minimum output voltage level by setting R1 and R2 to meet the required ratio calculated in Equation 7.

$$\frac{V_{REF}}{V_+} = \frac{0.1\,V}{3.3\,V} = 0.0303 \tag{7}$$

The closest resistor ratio to meet this ratio sets R1 to 11.5 kΩ and R2 to 357 Ω.

The required feedback resistance can be calculated based on the input current and desired output voltage.

$$R_F = \frac{V_{OUT} - V_{REF}}{I_{IN}} = \frac{3.2\,V - 0.1\,V}{10\,\mu A} = 310\,\frac{kV}{A} \approx 309\,k\Omega \tag{8}$$

Calculate the value for the feedback capacitor based on R_F and the desired –3-dB bandwidth, (f_{-3dB}) using Equation 9.

$$C_F = \frac{1}{2 \times \pi \times R_F \times f_{-3\,dB}} = \frac{1}{2 \times \pi \times 309\,k\Omega \times 50\,kHz} = 10.3\,pF \approx 10\,pF \tag{9}$$

The minimum op amp bandwidth required for this application is based on the value of R_F, C_F, and the capacitance on the INx– pin of the LMV358A-Q1 which is equal to the sum of the photodiode shunt capacitance, (CPD) the common-mode input capacitance, (CCM) and the differential input capacitance (CD) as Equation 10 shows.

$$C_{IN} = C_{PD} + C_{CM} + C_D = 47\,pF + 5\,pf + 1\,pF = 53\,pF \tag{10}$$

The minimum op amp bandwidth is calculated in Equation 11.

$$F = BGW \geq \frac{C_{IN} + C_F}{2 \times \pi \times R_F \times C_F{}^2} \geq 324\,kHz \tag{11}$$

The 1-MHz bandwidth of the LMV3xxA-Q1 meets the minimum bandwidth requirement and remains stable in this application configuration.

8.2.2.3 Application Curves

The measured current-to-voltage transfer function for the photodiode amplifier circuit is shown in Figure 8-4. The measured performance of the photodiode amplifier circuit is shown in Figure 8-5.

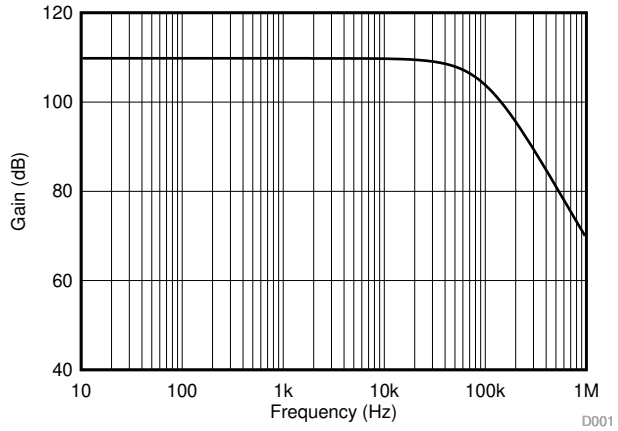

Figure 8-4. Photodiode Amplifier Circuit AC Gain Results

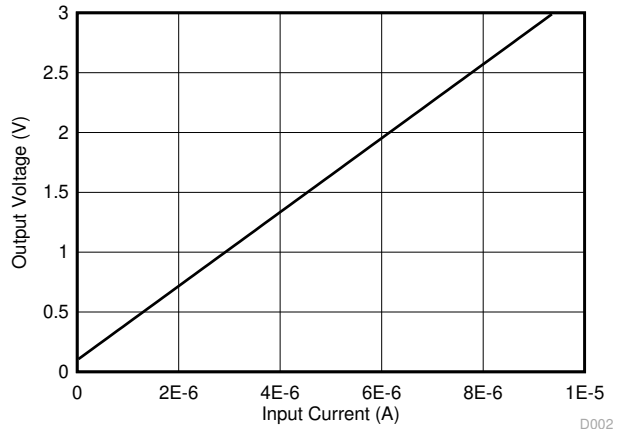

Figure 8-5. Photodiode Amplifier Circuit DC Results

Copyright © 2023 Texas Instruments Incorporated

9 Power Supply Recommendations

The LMV3xxA-Q1 family is specified for operation from 2.5 V to 5.5 V (±1.25 V to ±2.75 V); many specifications apply from –40°C to 125°C. The *Typical Characteristics* section presents parameters that may exhibit significant variance with regard to operating voltage or temperature.

> **CAUTION**
>
> Supply voltages larger than 6 V may permanently damage the device; see the *Absolute Maximum Ratings* table.

Place 0.1-µF bypass capacitors close to the power-supply pins to reduce coupling errors from noisy or high-impedance power supplies. For more detailed information on bypass capacitor placement, see the *Layout Guidelines* section.

9.1 Input and ESD Protection

The LMV3xxA-Q1 family incorporates internal ESD protection circuits on all pins. For input and output pins, this protection primarily consists of current-steering diodes connected between the input and power-supply pins. These ESD protection diodes provide in-circuit, input overdrive protection, as long as the current is limited to 10 mA. Figure 9-1 shows how a series input resistor can be added to the driven input to limit the input current. The added resistor contributes thermal noise at the amplifier input and the value must be kept to a minimum in noise-sensitive applications.

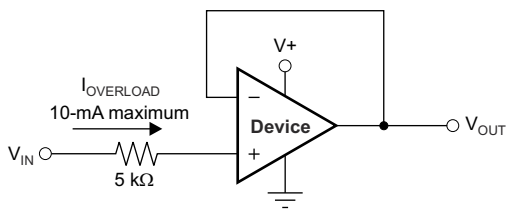

Figure 9-1. Input Current Protection

10 Layout

10.1 Layout Guidelines

For best operational performance of the device, use good printed circuit board (PCB) layout practices, including:

- Noise can propagate into analog circuitry through the power connections of the board and propagate to the power pins of the op amp itself. Bypass capacitors are used to reduce the coupled noise by providing a low-impedance path to ground.
  - Connect low-ESR, 0.1-µF ceramic bypass capacitors between each supply pin and ground, placed as close to the device as possible. A single bypass capacitor from V+ to ground is adequate for single-supply applications.
- Separate grounding for analog and digital portions of circuitry is one of the simplest and most effective methods of noise suppression. One or more layers on multilayer PCBs are usually devoted to ground planes. A ground plane helps distribute heat and reduces electromagnetic interference (EMI) noise pickup. Take care to physically separate digital and analog grounds, paying attention to the flow of the ground current.
- To reduce parasitic coupling, run the input traces as far away from the supply or output traces as possible. If these traces cannot be kept separate, crossing the sensitive trace at a 90 degree angle is much better as opposed to running the traces in parallel with the noisy trace.
- Place the external components as close to the device as possible, as shown in Figure 10-2. Keeping R_F and R_G close to the inverting input minimizes parasitic capacitance.
- Keep the length of input traces as short as possible. Remember that the input traces are the most sensitive part of the circuit.
- Consider a driven, low-impedance guard ring around the critical traces. A guard ring may significantly reduce leakage currents from nearby traces that are at different potentials.
- Cleaning the PCB following board assembly is recommended for best performance.
- Any precision integrated circuit can experience performance shifts resulting from moisture ingress into the plastic package. Following any aqueous PCB cleaning process, baking the PCB assembly is recommended to remove moisture introduced into the device packaging during the cleaning process. A low-temperature, post-cleaning bake at 85°C for 30 minutes is sufficient for most circumstances.

10.2 Layout Example

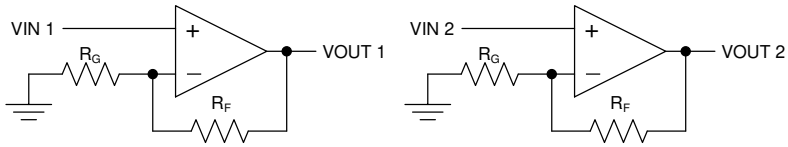

Figure 10-1. Schematic Representation for Figure 10-2

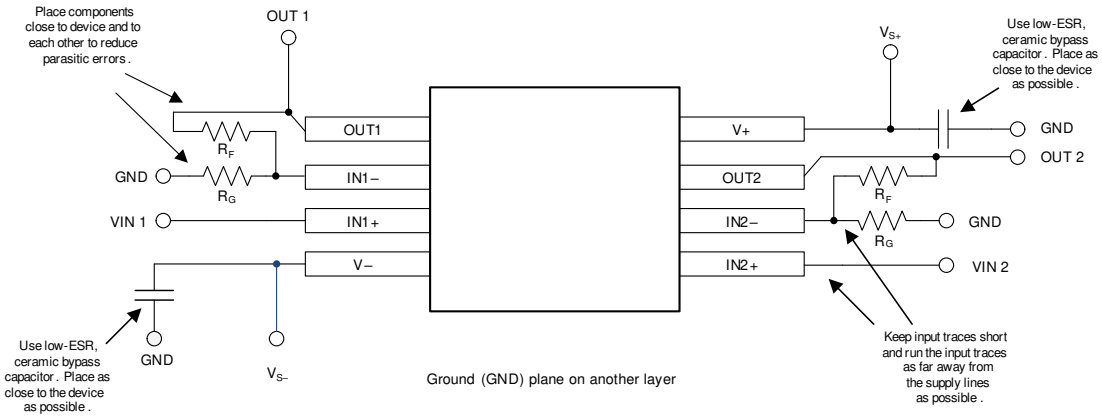

Figure 10-2. Layout Example

Copyright © 2023 Texas Instruments Incorporated

11 Device and Documentation Support

11.1 Documentation Support

11.1.1 Related Documentation

For related documentation, see the following:

- Texas Instruments, *EMI Rejection Ratio of Operational Amplifiers*

11.2 Receiving Notification of Documentation Updates

To receive notification of documentation updates, navigate to the device product folder on ti.com. In the upper right corner, click on *Alert me* to register and receive a weekly digest of any product information that has changed. For change details, review the revision history included in any revised document.

11.3 Support Resources

TI E2E™ support forums are an engineer's go-to source for fast, verified answers and design help — straight from the experts. Search existing answers or ask your own question to get the quick design help you need.

Linked content is provided "AS IS" by the respective contributors. They do not constitute TI specifications and do not necessarily reflect TI's views; see TI's Terms of Use.

11.4 Trademarks

TI E2E™ is a trademark of Texas Instruments.
All trademarks are the property of their respective owners.

11.5 Electrostatic Discharge Caution

This integrated circuit can be damaged by ESD. Texas Instruments recommends that all integrated circuits be handled with appropriate precautions. Failure to observe proper handling and installation procedures can cause damage.

ESD damage can range from subtle performance degradation to complete device failure. Precision integrated circuits may be more susceptible to damage because very small parametric changes could cause the device not to meet its published specifications.

11.6 Glossary

TI Glossary This glossary lists and explains terms, acronyms, and definitions.

12 Mechanical, Packaging, and Orderable Information

The following pages include mechanical, packaging, and orderable information. This information is the most-current data available for the designated devices. This data is subject to change without notice and without revision of this document. For browser-based versions of this data sheet, see the left-hand navigation pane.

PACKAGING INFORMATION

Orderable part number	Status (1)	Material type (2)	Package | Pins	Package qty | Carrier	RoHS (3)	Lead finish/ Ball material (4)	MSL rating/ Peak reflow (5)	Op temp (°C)	Part marking (6)
LMV321AQDBVRQ1	Active	Production	SOT-23 (DBV) | 5	3000 | LARGE T&R	Yes	SN	Level-1-260C-UNLIM	-40 to 125	2S3F
LMV321AQDBVRQ1.A	Active	Production	SOT-23 (DBV) | 5	3000 | LARGE T&R	Yes	SN	Level-1-260C-UNLIM	-40 to 125	2S3F
LMV321AQDCKRQ1	Active	Production	SC70 (DCK) | 5	3000 | LARGE T&R	Yes	NIPDAU	Level-1-260C-UNLIM	-40 to 125	1N1
LMV321AQDCKRQ1.A	Active	Production	SC70 (DCK) | 5	3000 | LARGE T&R	Yes	NIPDAU	Level-1-260C-UNLIM	-40 to 125	1N1
LMV321AUQDBVRQ1	Active	Production	SOT-23 (DBV) | 5	3000 | LARGE T&R	Yes	SN	Level-1-260C-UNLIM	-40 to 125	2T7H
LMV321AUQDBVRQ1.A	Active	Production	SOT-23 (DBV) | 5	3000 | LARGE T&R	Yes	SN	Level-1-260C-UNLIM	-40 to 125	2T7H
LMV324AQDRQ1	Active	Production	SOIC (D) | 14	2500 | LARGE T&R	Yes	NIPDAU	Level-2-260C-1 YEAR	-40 to 125	LM324Q
LMV324AQDRQ1.A	Active	Production	SOIC (D) | 14	2500 | LARGE T&R	Yes	NIPDAU	Level-2-260C-1 YEAR	-40 to 125	LM324Q
LMV324AQDYYRQ1	Active	Production	SOT-23-THIN (DYY) | 14	3000 | LARGE T&R	Yes	NIPDAU	Level-1-260C-UNLIM	-40 to 125	LM324Q
LMV324AQDYYRQ1.A	Active	Production	SOT-23-THIN (DYY) | 14	3000 | LARGE T&R	Yes	NIPDAU	Level-1-260C-UNLIM	-40 to 125	LM324Q
LMV324AQPWRQ1	Active	Production	TSSOP (PW) | 14	3000 | LARGE T&R	Yes	NIPDAU | SN	Level-1-260C-UNLIM	-40 to 125	LM324A
LMV324AQPWRQ1.A	Active	Production	TSSOP (PW) | 14	3000 | LARGE T&R	Yes	NIPDAU	Level-1-260C-UNLIM	-40 to 125	LM324A
LMV358AQDGKRQ1	Active	Production	VSSOP (DGK) | 8	2500 | LARGE T&R	Yes	NIPDAU	Level-1-260C-UNLIM	-40 to 125	27FT
LMV358AQDGKRQ1.A	Active	Production	VSSOP (DGK) | 8	2500 | LARGE T&R	Yes	NIPDAU	Level-1-260C-UNLIM	-40 to 125	27FT
LMV358AQDRQ1	Active	Production	SOIC (D) | 8	2500 | LARGE T&R	Yes	NIPDAU	Level-1-260C-UNLIM	-40 to 125	L358AQ
LMV358AQDRQ1.A	Active	Production	SOIC (D) | 8	2500 | LARGE T&R	Yes	NIPDAU	Level-1-260C-UNLIM	-40 to 125	L358AQ

(1) **Status:** For more details on status, see our product life cycle.

(2) **Material type:** When designated, preproduction parts are prototypes/experimental devices, and are not yet approved or released for full production. Testing and final process, including without limitation quality assurance, reliability performance testing, and/or process qualification, may not yet be complete, and this item is subject to further changes or possible discontinuation. If available for ordering, purchases will be subject to an additional waiver at checkout, and are intended for early internal evaluation purposes only. These items are sold without warranties of any kind.

(3) **RoHS values:** Yes, No, RoHS Exempt. See the TI RoHS Statement for additional information and value definition.

(4) **Lead finish/Ball material:** Parts may have multiple material finish options. Finish options are separated by a vertical ruled line. Lead finish/Ball material values may wrap to two lines if the finish value exceeds the maximum column width.

(5) **MSL rating/Peak reflow:** The moisture sensitivity level ratings and peak solder (reflow) temperatures. In the event that a part has multiple moisture sensitivity ratings, only the lowest level per JEDEC standards is shown. Refer to the shipping label for the actual reflow temperature that will be used to mount the part to the printed circuit board.

(6) **Part marking:** There may be an additional marking, which relates to the logo, the lot trace code information, or the environmental category of the part.

Multiple part markings will be inside parentheses. Only one part marking contained in parentheses and separated by a "~" will appear on a part. If a line is indented then it is a continuation of the previous line and the two combined represent the entire part marking for that device.

Important Information and Disclaimer: The information provided on this page represents TI's knowledge and belief as of the date that it is provided. TI bases its knowledge and belief on information provided by third parties, and makes no representation or warranty as to the accuracy of such information. Efforts are underway to better integrate information from third parties. TI has taken and continues to take reasonable steps to provide representative and accurate information but may not have conducted destructive testing or chemical analysis on incoming materials and chemicals. TI and TI suppliers consider certain information to be proprietary, and thus CAS numbers and other limited information may not be available for release.

In no event shall TI's liability arising out of such information exceed the total purchase price of the TI part(s) at issue in this document sold by TI to Customer on an annual basis.

OTHER QUALIFIED VERSIONS OF LMV321A-Q1, LMV324A-Q1, LMV358A-Q1 :

- Catalog : LMV321A, LMV324A, LMV358A

NOTE: Qualified Version Definitions:

- Catalog - TI's standard catalog product

TAPE AND REEL INFORMATION

REEL DIMENSIONS

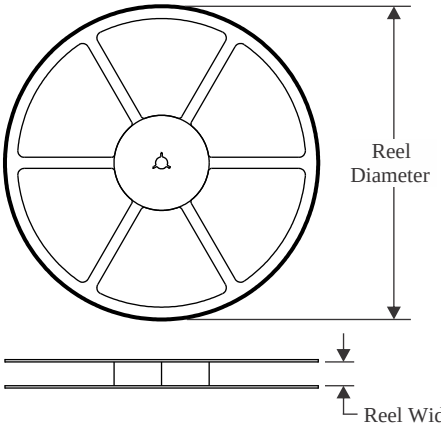

TAPE DIMENSIONS

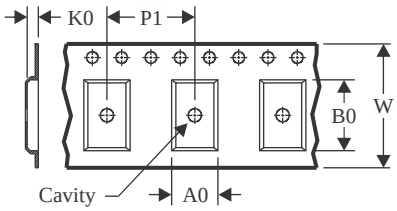

A0	Dimension designed to accommodate the component width
B0	Dimension designed to accommodate the component length
K0	Dimension designed to accommodate the component thickness
W	Overall width of the carrier tape
P1	Pitch between successive cavity centers

QUADRANT ASSIGNMENTS FOR PIN 1 ORIENTATION IN TAPE

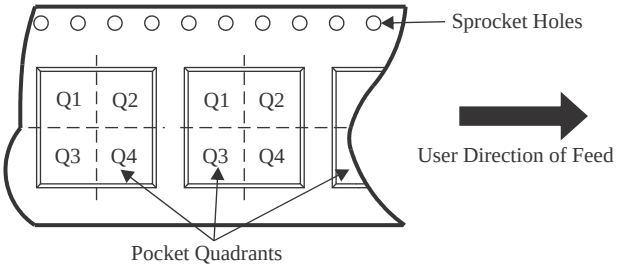

*All dimensions are nominal

Device	Package Type	Package Drawing	Pins	SPQ	Reel Diameter (mm)	Reel Width W1 (mm)	A0 (mm)	B0 (mm)	K0 (mm)	P1 (mm)	W (mm)	Pin1 Quadrant
LMV321AQDBVRQ1	SOT-23	DBV	5	3000	180.0	8.4	3.2	3.2	1.4	4.0	8.0	Q3
LMV321AQDBVRQ1	SOT-23	DBV	5	3000	180.0	8.4	3.2	3.2	1.4	4.0	8.0	Q3
LMV321AQDCKRQ1	SC70	DCK	5	3000	178.0	9.0	2.4	2.5	1.2	4.0	8.0	Q3
LMV321AUQDBVRQ1	SOT-23	DBV	5	3000	180.0	8.4	3.2	3.2	1.4	4.0	8.0	Q3
LMV321AUQDBVRQ1	SOT-23	DBV	5	3000	180.0	8.4	3.2	3.2	1.4	4.0	8.0	Q3
LMV324AQDRQ1	SOIC	D	14	2500	330.0	16.4	6.5	9.0	2.1	8.0	16.0	Q1
LMV324AQDYYRQ1	SOT-23-THIN	DYY	14	3000	330.0	12.4	4.8	3.6	1.6	8.0	12.0	Q3
LMV324AQPWRQ1	TSSOP	PW	14	3000	330.0	12.4	6.9	5.6	1.6	8.0	12.0	Q1
LMV358AQDGKRQ1	VSSOP	DGK	8	2500	330.0	12.4	5.25	3.35	1.25	8.0	12.0	Q1
LMV358AQDGKRQ1	VSSOP	DGK	8	2500	330.0	12.4	5.3	3.4	1.4	8.0	12.0	Q1
LMV358AQDRQ1	SOIC	D	8	2500	330.0	12.4	6.4	5.2	2.1	8.0	12.0	Q1

TAPE AND REEL BOX DIMENSIONS

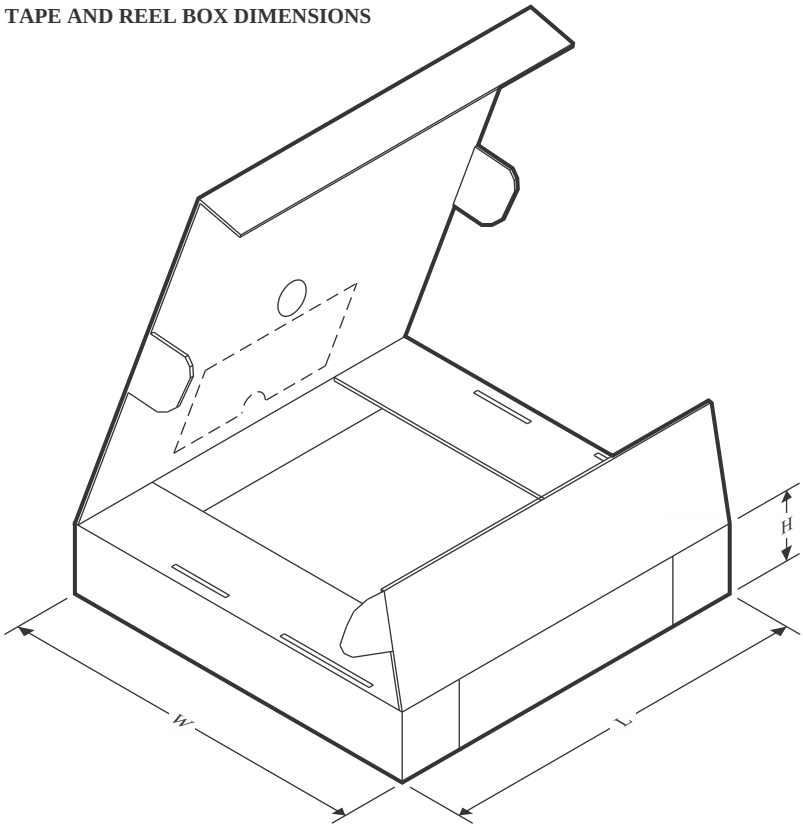

*All dimensions are nominal

Device	Package Type	Package Drawing	Pins	SPQ	Length (mm)	Width (mm)	Height (mm)
LMV321AQDBVRQ1	SOT-23	DBV	5	3000	210.0	185.0	35.0
LMV321AQDBVRQ1	SOT-23	DBV	5	3000	210.0	185.0	35.0
LMV321AQDCKRQ1	SC70	DCK	5	3000	190.0	190.0	30.0
LMV321AUQDBVRQ1	SOT-23	DBV	5	3000	210.0	185.0	35.0
LMV321AUQDBVRQ1	SOT-23	DBV	5	3000	210.0	185.0	35.0
LMV324AQDRQ1	SOIC	D	14	2500	353.0	353.0	32.0
LMV324AQDYYRQ1	SOT-23-THIN	DYY	14	3000	336.6	336.6	31.8
LMV324AQPWRQ1	TSSOP	PW	14	3000	353.0	353.0	32.0
LMV358AQDGKRQ1	VSSOP	DGK	8	2500	366.0	364.0	50.0
LMV358AQDGKRQ1	VSSOP	DGK	8	2500	353.0	353.0	32.0
LMV358AQDRQ1	SOIC	D	8	2500	353.0	353.0	32.0

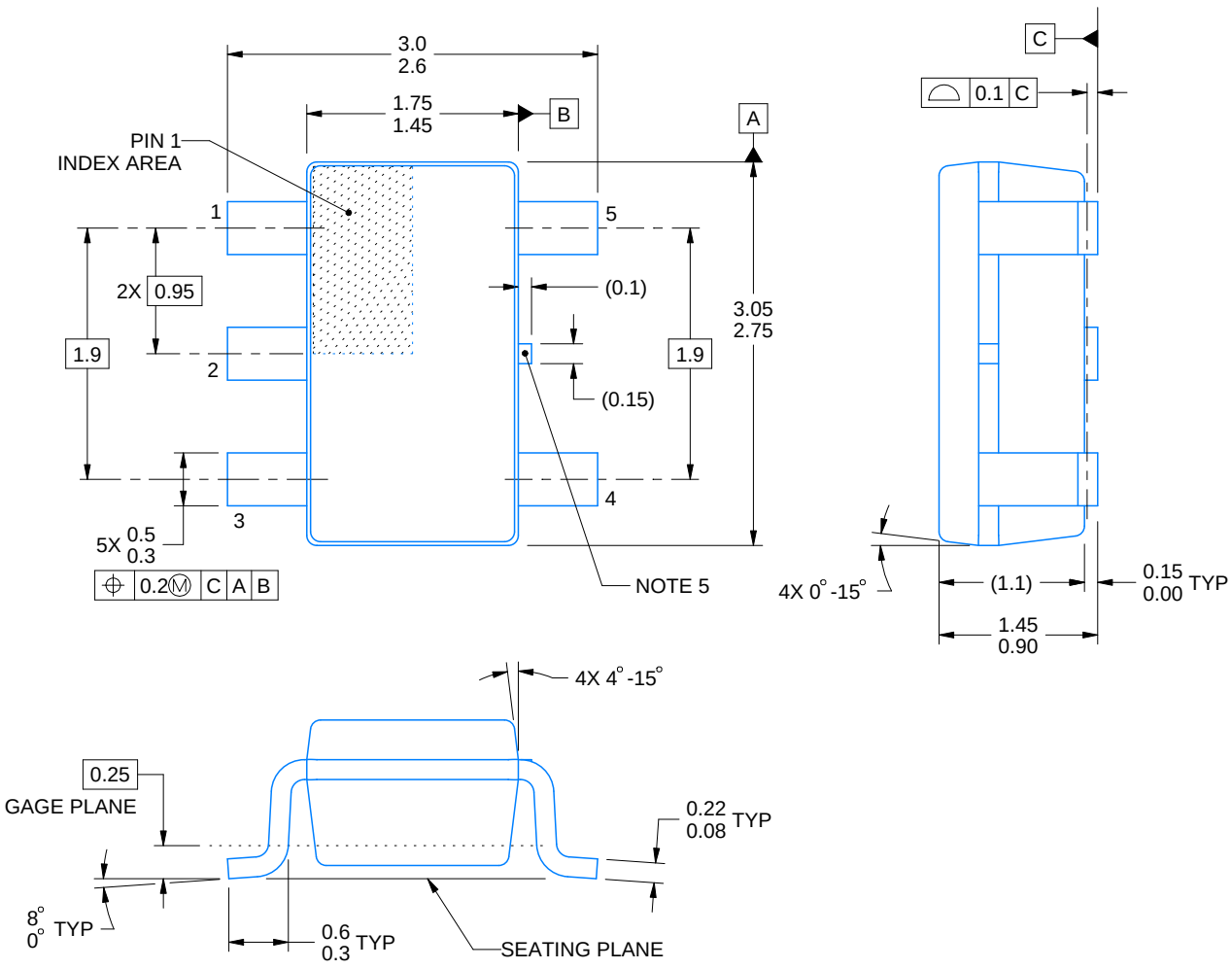

4214839/K 08/2024

NOTES:

1. All linear dimensions are in millimeters. Any dimensions in parenthesis are for reference only. Dimensioning and tolerancing per ASME Y14.5M.
2. This drawing is subject to change without notice.
3. Refernce JEDEC MO-178.
4. Body dimensions do not include mold flash, protrusions, or gate burrs. Mold flash, protrusions, or gate burrs shall not exceed 0.25 mm per side.
5. Support pin may differ or may not be present.

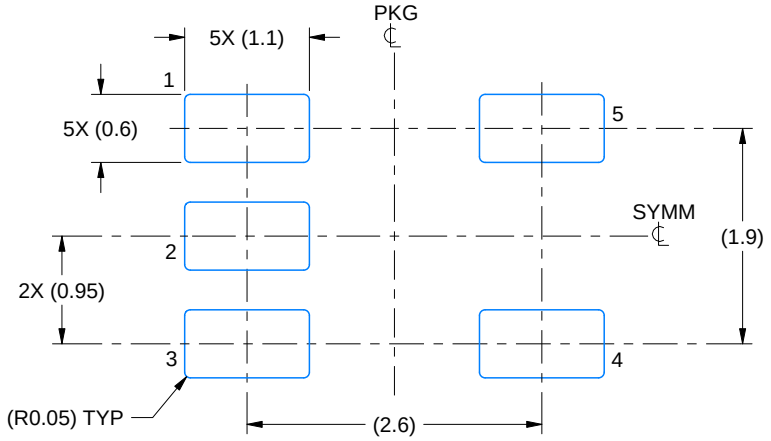

LAND PATTERN EXAMPLE
EXPOSED METAL SHOWN
SCALE:15X

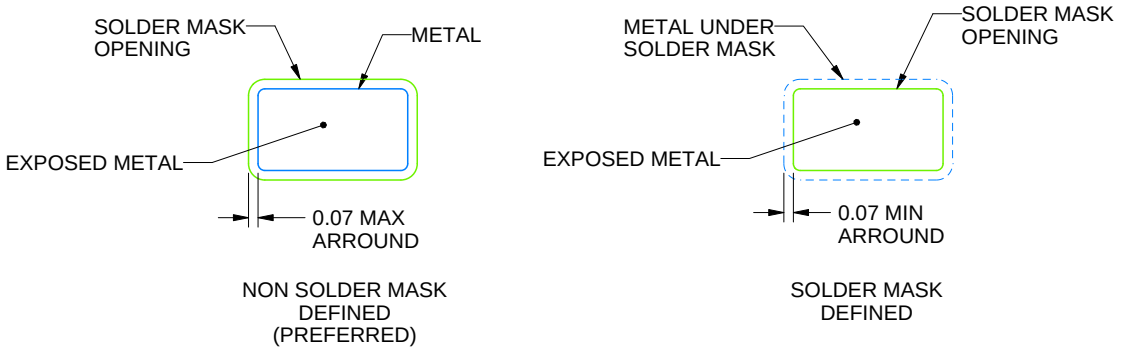

SOLDER MASK DETAILS

4214839/K 08/2024

NOTES: (continued)

6. Publication IPC-7351 may have alternate designs.
7. Solder mask tolerances between and around signal pads can vary based on board fabrication site.

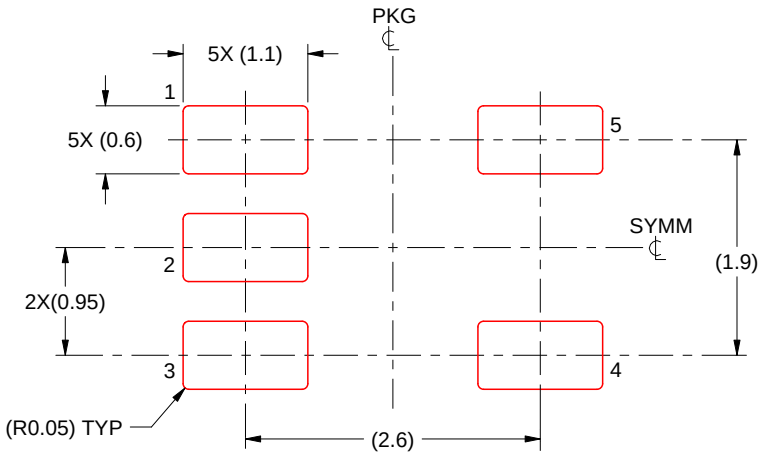

SOLDER PASTE EXAMPLE
BASED ON 0.125 mm THICK STENCIL
SCALE:15X

4214839/K 08/2024

NOTES: (continued)

8. Laser cutting apertures with trapezoidal walls and rounded corners may offer better paste release. IPC-7525 may have alternate design recommendations.
9. Board assembly site may have different recommendations for stencil design.

PACKAGE OUTLINE

DGK0008A

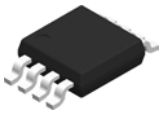

VSSOP - 1.1 mm max height

SMALL OUTLINE PACKAGE

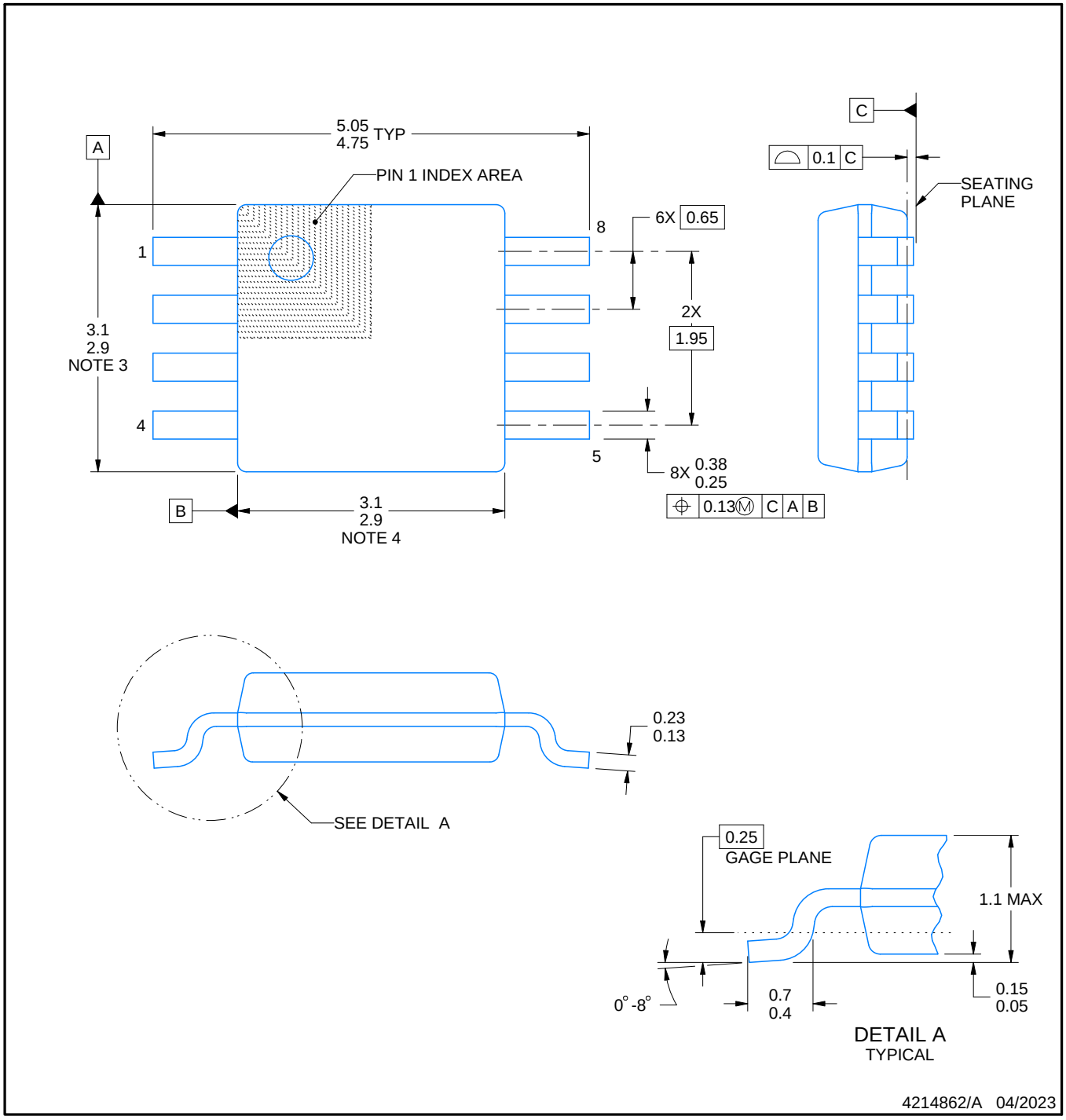

PowerPAD is a trademark of Texas Instruments.

NOTES:

1. All linear dimensions are in millimeters. Any dimensions in parenthesis are for reference only. Dimensioning and tolerancing per ASME Y14.5M.
2. This drawing is subject to change without notice.
3. This dimension does not include mold flash, protrusions, or gate burrs. Mold flash, protrusions, or gate burrs shall not exceed 0.15 mm per side.
4. This dimension does not include interlead flash. Interlead flash shall not exceed 0.25 mm per side.
5. Reference JEDEC registration MO-187.

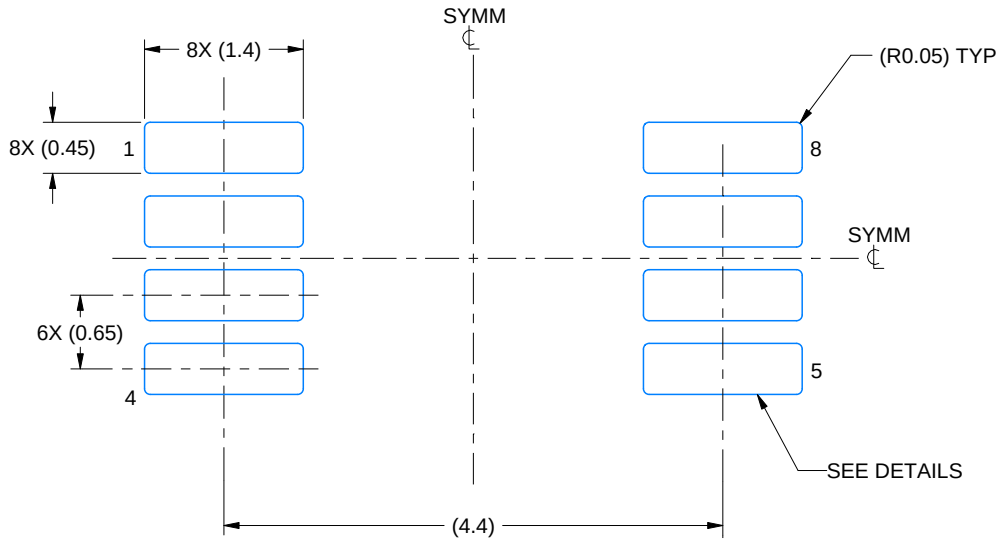

LAND PATTERN EXAMPLE
EXPOSED METAL SHOWN
SCALE: 15X

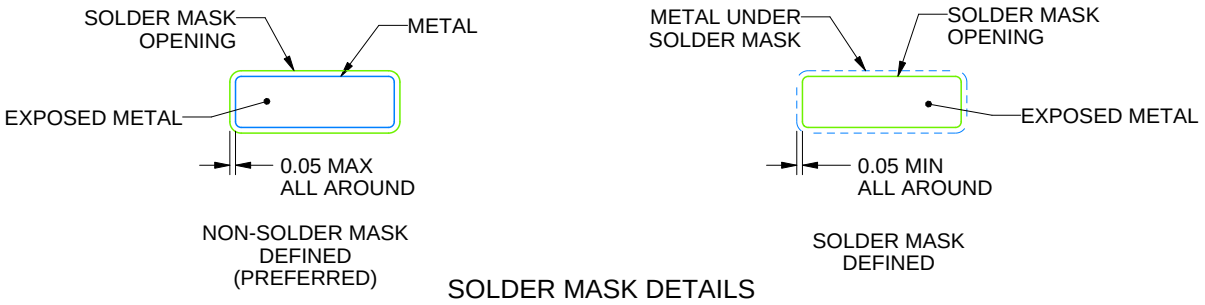

SOLDER MASK DETAILS

4214862/A 04/2023

NOTES: (continued)

6. Publication IPC-7351 may have alternate designs.
7. Solder mask tolerances between and around signal pads can vary based on board fabrication site.
8. Vias are optional depending on application, refer to device data sheet. If any vias are implemented, refer to their locations shown on this view. It is recommended that vias under paste be filled, plugged or tented.
9. Size of metal pad may vary due to creepage requirement.

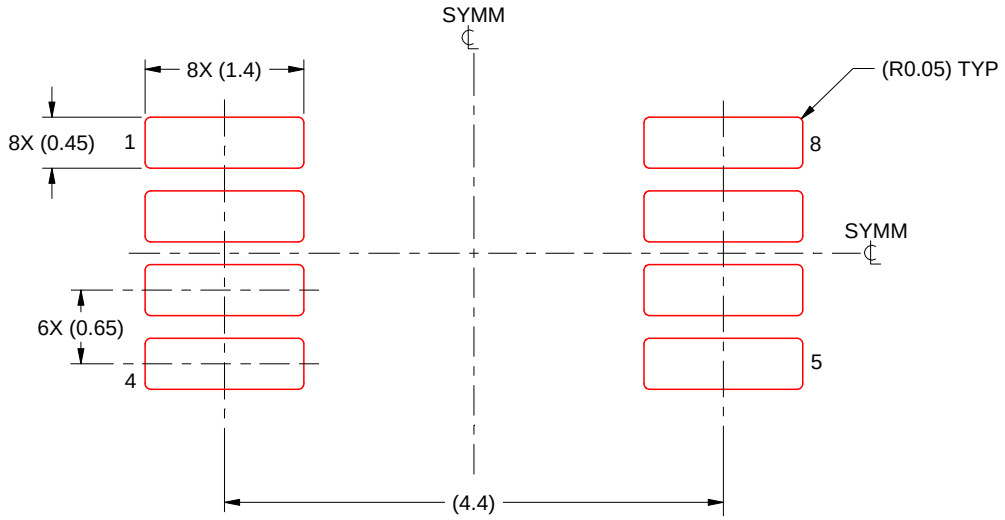

SOLDER PASTE EXAMPLE
SCALE: 15X

4214862/A 04/2023

NOTES: (continued)

11. Laser cutting apertures with trapezoidal walls and rounded corners may offer better paste release. IPC-7525 may have alternate design recommendations.
12. Board assembly site may have different recommendations for stencil design.

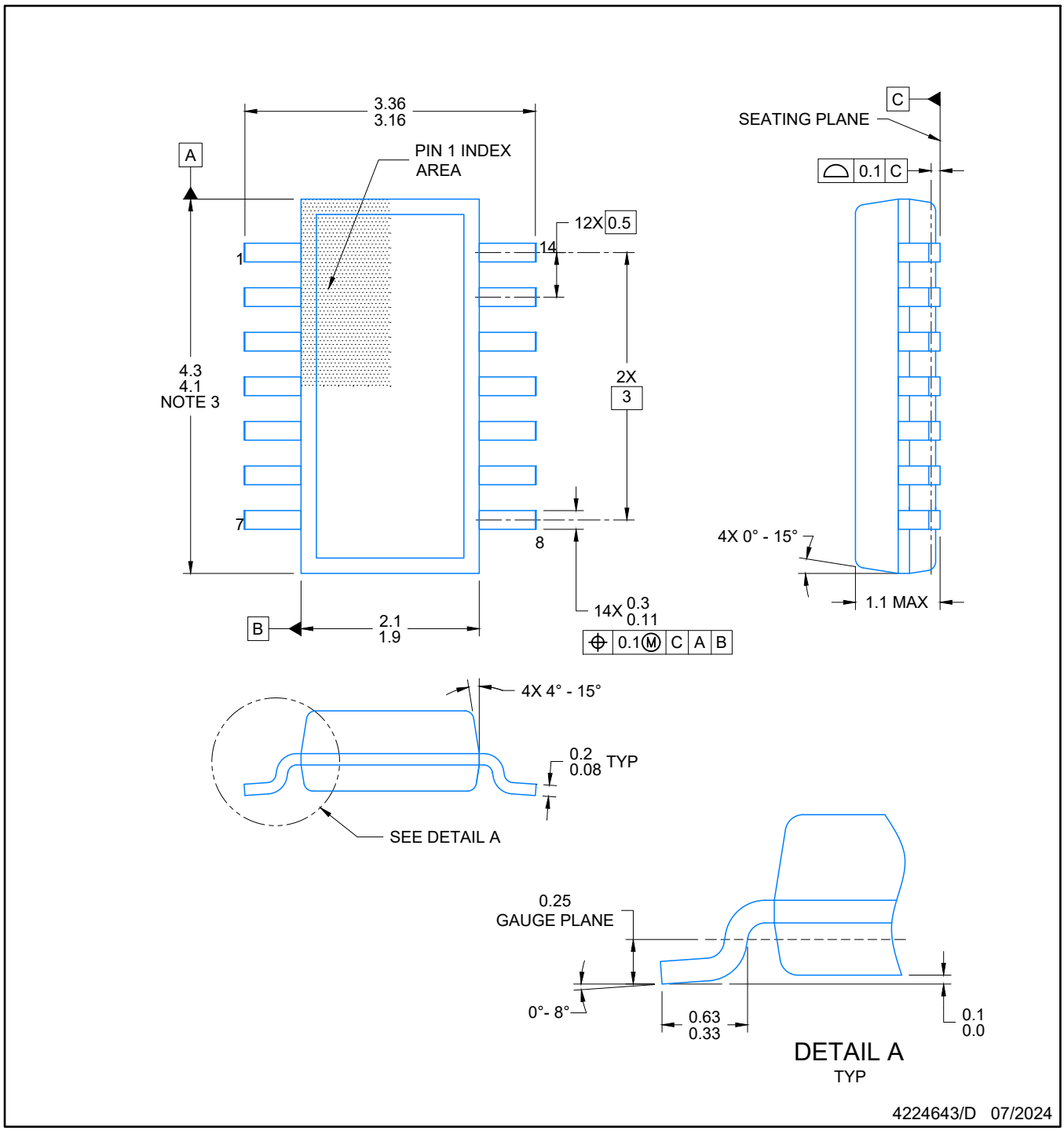

NOTES:

1. All linear dimensions are in millimeters. Any dimensions in parenthesis are for reference only. Dimensioning and tolerancing per ASME Y14.5M.
2. This drawing is subject to change without notice.
3. This dimension does not include mold flash, protrusions, or gate burrs. Mold flash, protrusions, or gate burrs shall not exceed 0.15 per side.
4. This dimension does not include interlead flash. Interlead flash shall not exceed 0.50 per side.
5. Reference JEDEC Registration MO-345, Variation AB

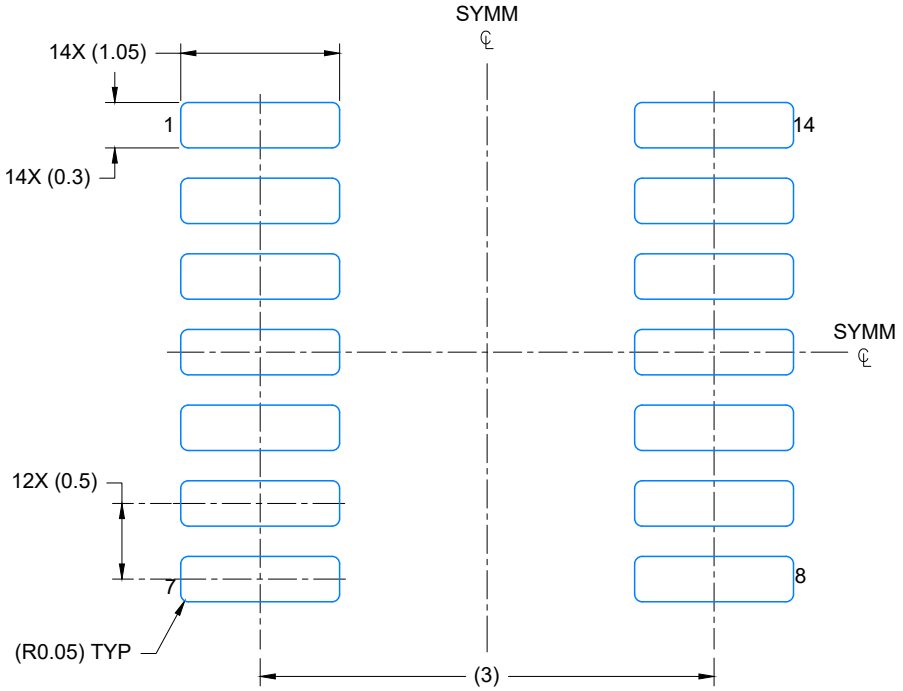

LAND PATTERN EXAMPLE
EXPOSED METAL SHOWN
SCALE: 20X

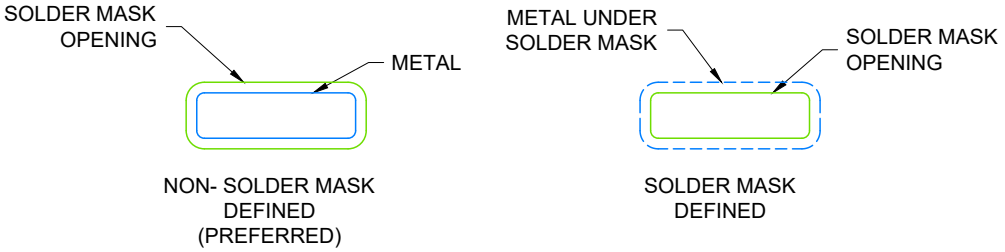

SOLDER MASK DETAILS

4224643/D 07/2024

NOTES: (continued)

6. Publication IPC-7351 may have alternate designs.
7. Solder mask tolerances between and around signal pads can vary based on board fabrication site.

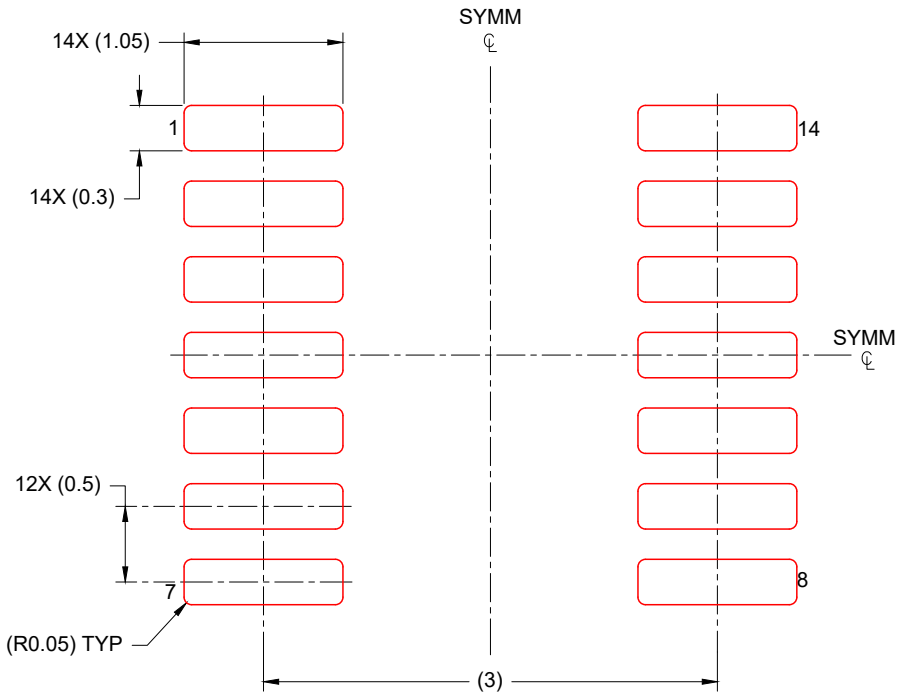

SOLDER PASTE EXAMPLE
BASED ON 0.125 mm THICK STENCIL
SCALE: 20X

4224643/D 07/2024

NOTES: (continued)

8. Laser cutting apertures with trapezoidal walls and rounded corners may offer better paste release. IPC-7525 may have alternate design recommendations.
9. Board assembly site may have different recommendations for stencil design.

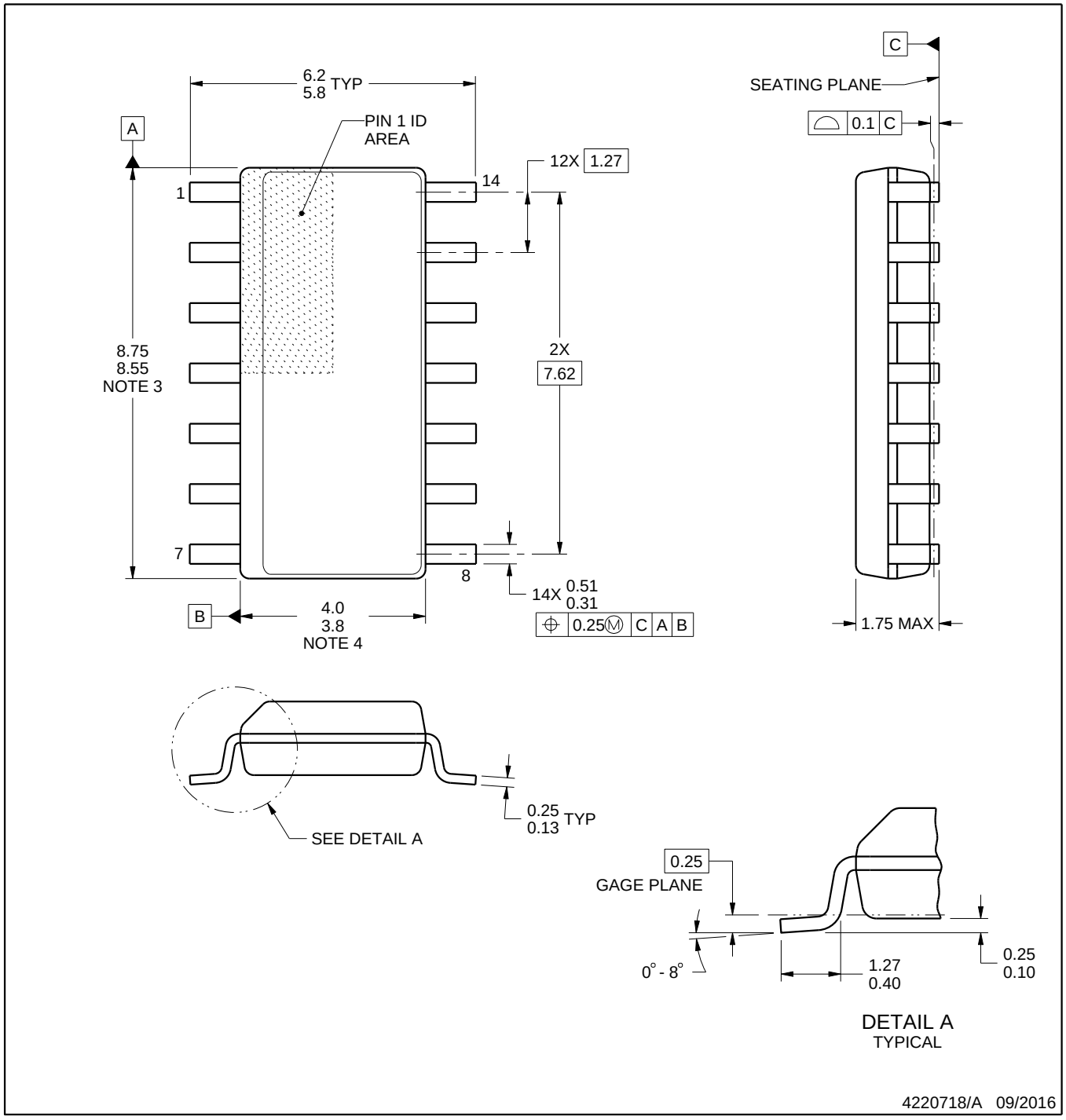

NOTES:

1. All linear dimensions are in millimeters. Dimensions in parenthesis are for reference only. Dimensioning and tolerancing per ASME Y14.5M.
2. This drawing is subject to change without notice.
3. This dimension does not include mold flash, protrusions, or gate burrs. Mold flash, protrusions, or gate burrs shall not exceed 0.15 mm, per side.
4. This dimension does not include interlead flash. Interlead flash shall not exceed 0.43 mm, per side.
5. Reference JEDEC registration MS-012, variation AB.

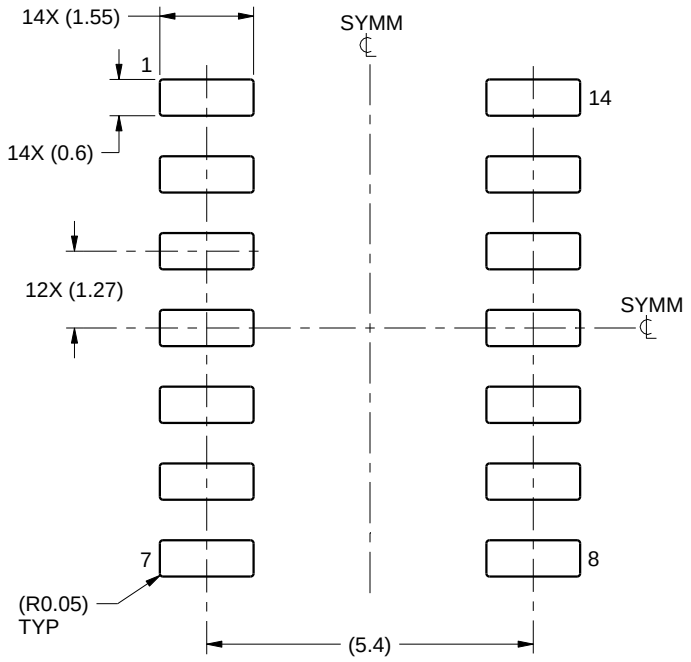

LAND PATTERN EXAMPLE
SCALE:8X

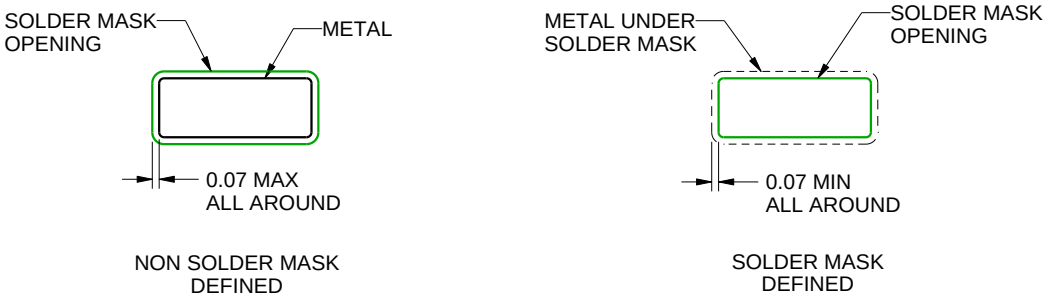

SOLDER MASK DETAILS

4220718/A 09/2016

NOTES: (continued)

6. Publication IPC-7351 may have alternate designs.
7. Solder mask tolerances between and around signal pads can vary based on board fabrication site.

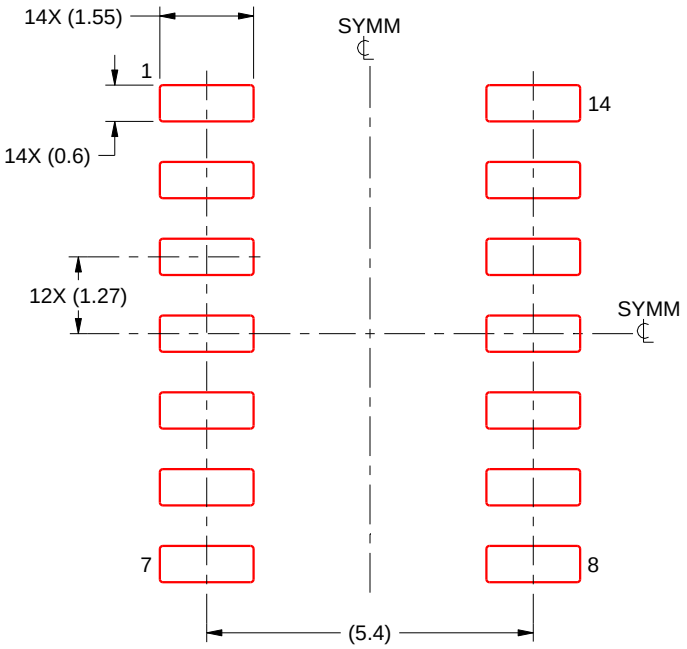

SOLDER PASTE EXAMPLE
BASED ON 0.125 mm THICK STENCIL
SCALE:8X

4220718/A 09/2016

NOTES: (continued)

8. Laser cutting apertures with trapezoidal walls and rounded corners may offer better paste release. IPC-7525 may have alternate design recommendations.
9. Board assembly site may have different recommendations for stencil design.

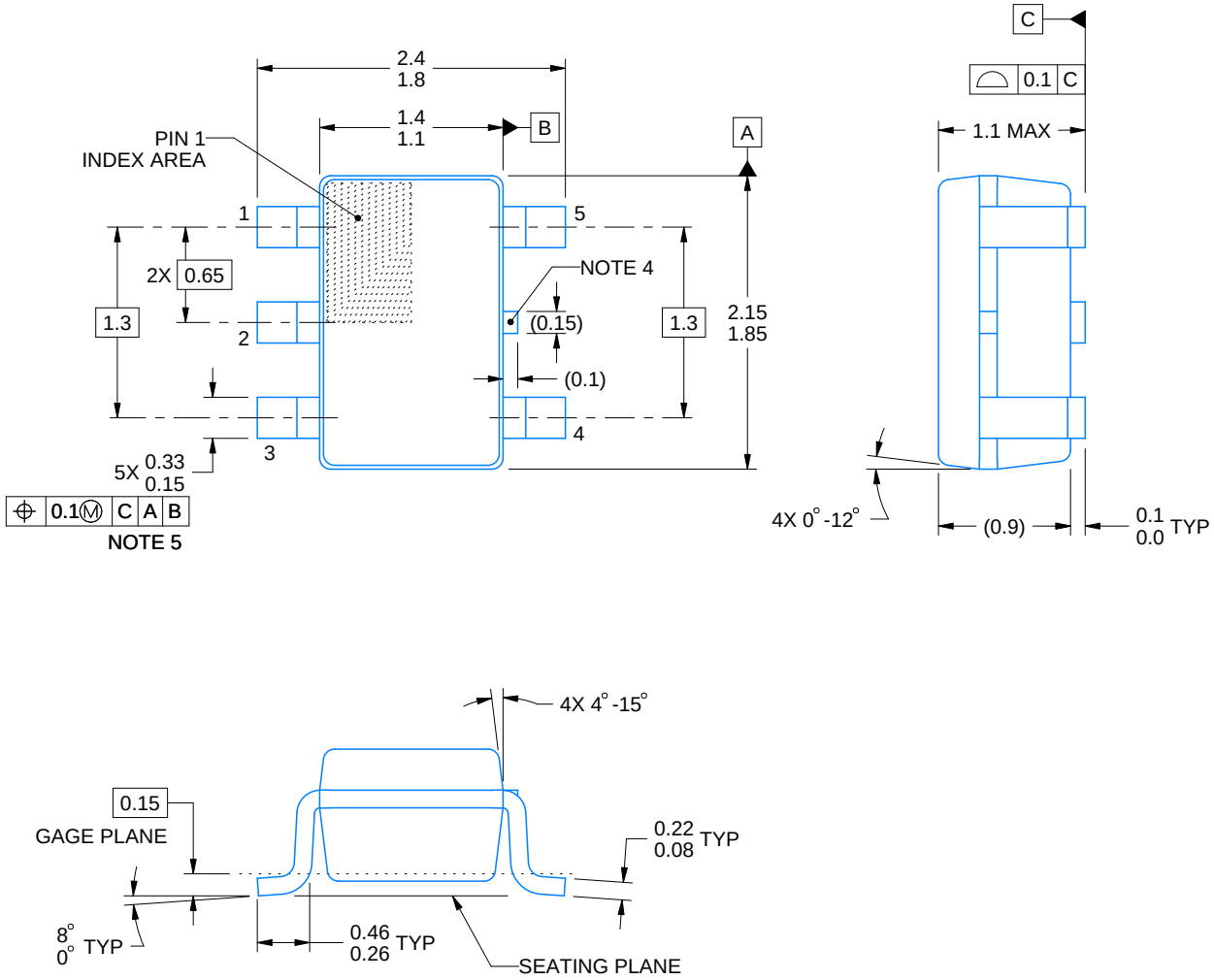

NOTES:

1. All linear dimensions are in millimeters. Any dimensions in parenthesis are for reference only. Dimensioning and tolerancing per ASME Y14.5M.
2. This drawing is subject to change without notice.
3. Refernce JEDEC MO-203.
4. Support pin may differ or may not be present.
5. Lead width does not comply with JEDEC.
6. Body dimensions do not include mold flash, protrusions, or gate burrs. Mold flash, protrusions, or gate burrs shall not exceed 0.25mm per side

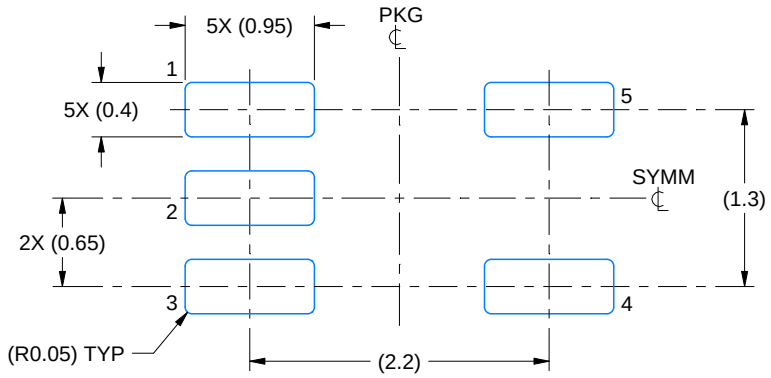

LAND PATTERN EXAMPLE
EXPOSED METAL SHOWN
SCALE:18X

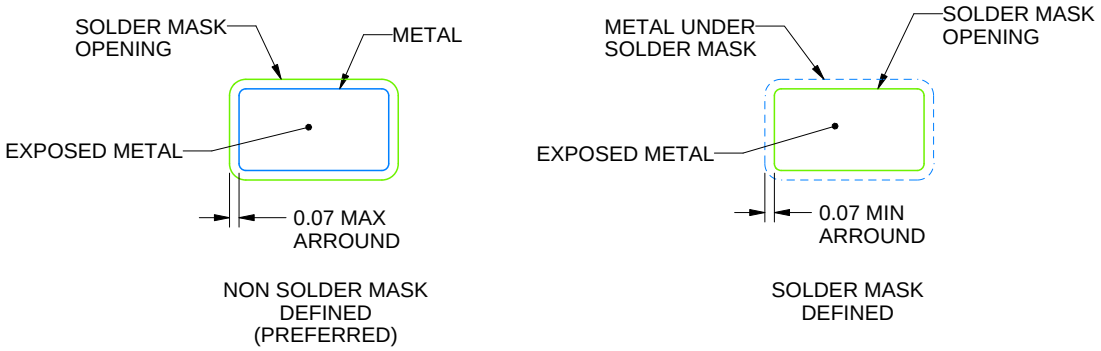

SOLDER MASK DETAILS

4214834/G 11/2024

NOTES: (continued)

7. Publication IPC-7351 may have alternate designs.
8. Solder mask tolerances between and around signal pads can vary based on board fabrication site.

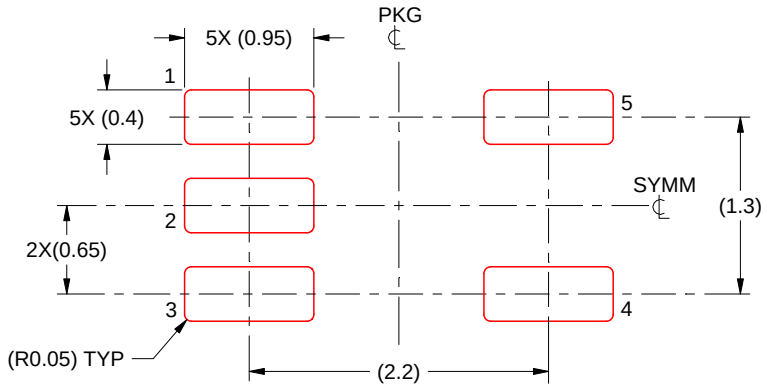

SOLDER PASTE EXAMPLE
BASED ON 0.125 THICK STENCIL
SCALE:18X

4214834/G 11/2024

NOTES: (continued)

9. Laser cutting apertures with trapezoidal walls and rounded corners may offer better paste release. IPC-7525 may have alternate design recommendations.
10. Board assembly site may have different recommendations for stencil design.

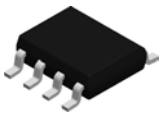

PACKAGE OUTLINE

D0008A

SOIC - 1.75 mm max height

SMALL OUTLINE INTEGRATED CIRCUIT

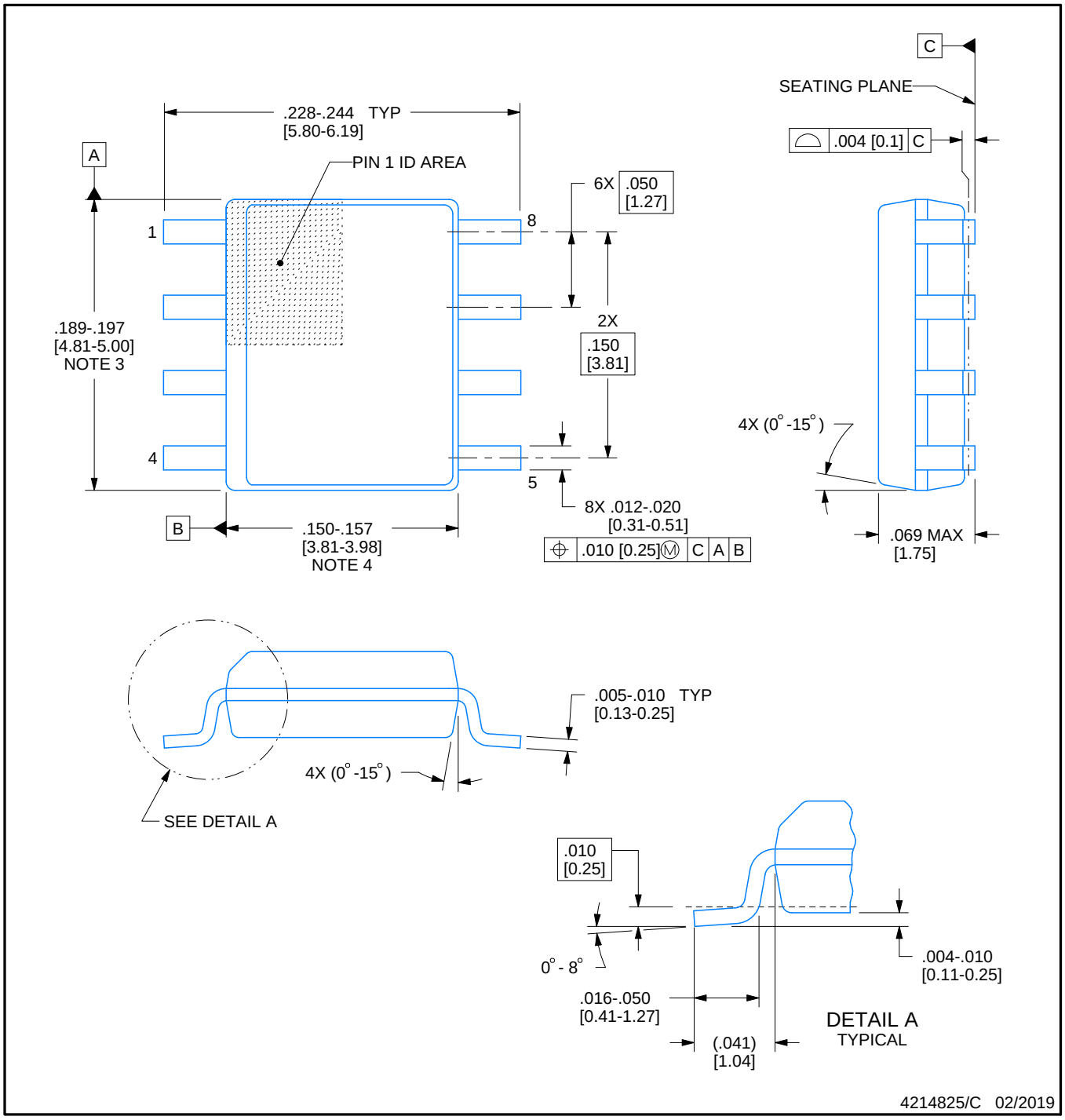

NOTES:

1. Linear dimensions are in inches [millimeters]. Dimensions in parenthesis are for reference only. Controlling dimensions are in inches. Dimensioning and tolerancing per ASME Y14.5M.
2. This drawing is subject to change without notice.
3. This dimension does not include mold flash, protrusions, or gate burrs. Mold flash, protrusions, or gate burrs shall not exceed .006 [0.15] per side.
4. This dimension does not include interlead flash.
5. Reference JEDEC registration MS-012, variation AA.

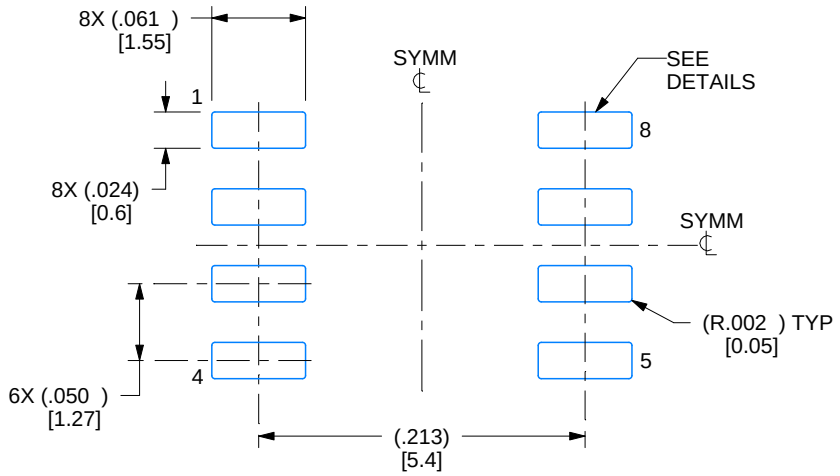

LAND PATTERN EXAMPLE
EXPOSED METAL SHOWN
SCALE:8X

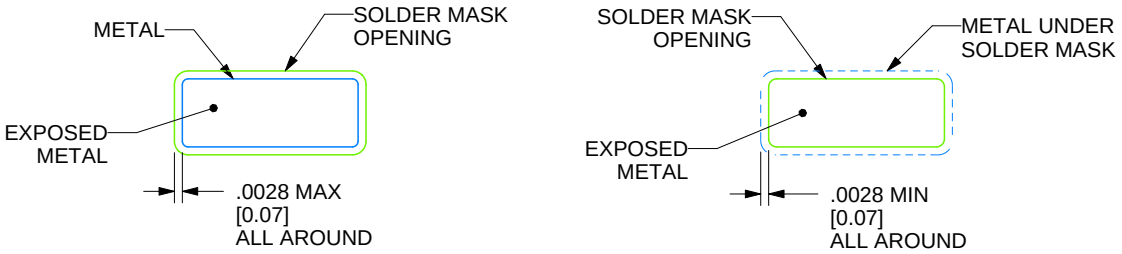

SOLDER MASK DETAILS

4214825/C 02/2019

NOTES: (continued)

6. Publication IPC-7351 may have alternate designs.
7. Solder mask tolerances between and around signal pads can vary based on board fabrication site.

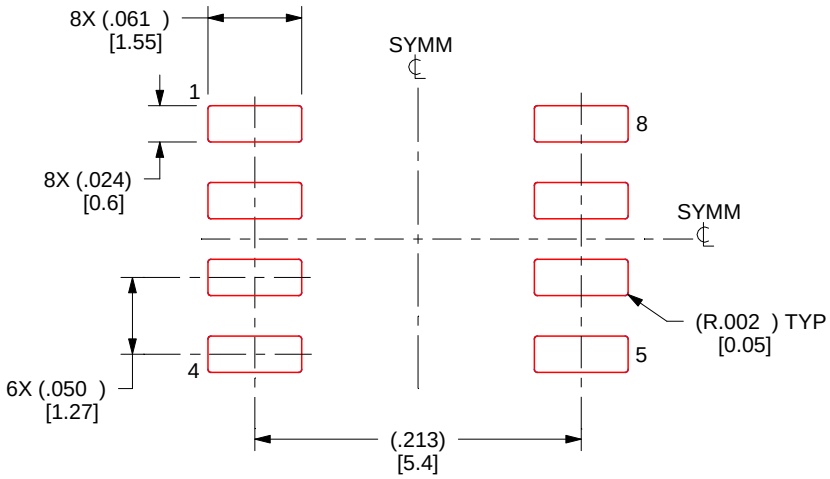

SOLDER PASTE EXAMPLE
BASED ON .005 INCH [0.125 MM] THICK STENCIL
SCALE:8X

4214825/C 02/2019

NOTES: (continued)

8. Laser cutting apertures with trapezoidal walls and rounded corners may offer better paste release. IPC-7525 may have alternate design recommendations.
9. Board assembly site may have different recommendations for stencil design.

PW0014A

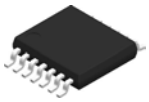

PACKAGE OUTLINE

TSSOP - 1.2 mm max height

SMALL OUTLINE PACKAGE

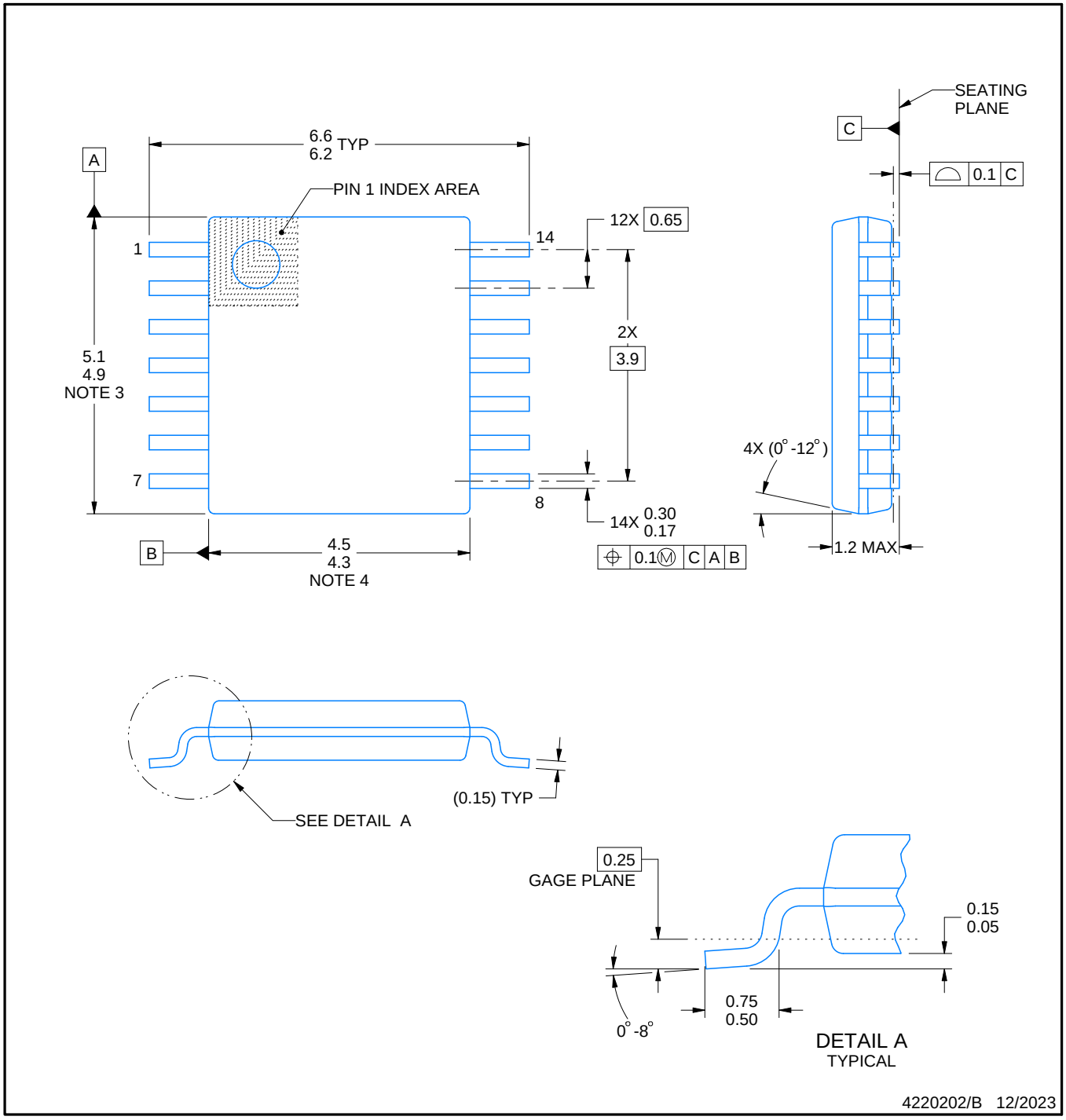

NOTES:

1. All linear dimensions are in millimeters. Any dimensions in parenthesis are for reference only. Dimensioning and tolerancing per ASME Y14.5M.
2. This drawing is subject to change without notice.
3. This dimension does not include mold flash, protrusions, or gate burrs. Mold flash, protrusions, or gate burrs shall not exceed 0.15 mm per side.
4. This dimension does not include interlead flash. Interlead flash shall not exceed 0.25 mm per side.
5. Reference JEDEC registration MO-153.

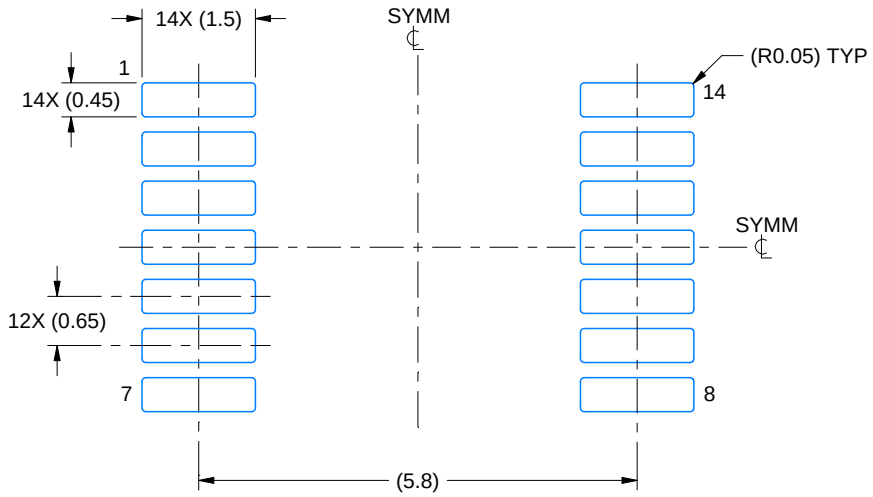

LAND PATTERN EXAMPLE
EXPOSED METAL SHOWN
SCALE: 10X

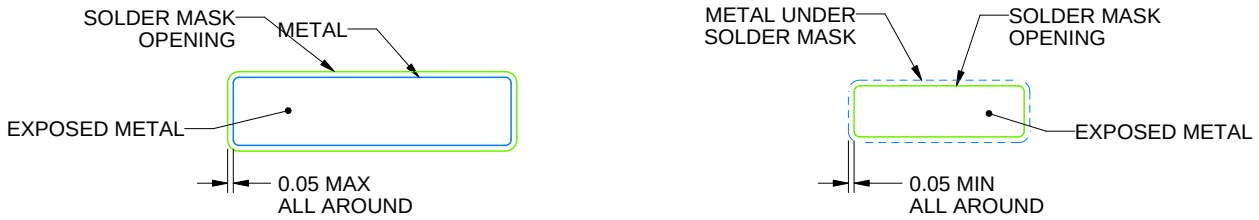

NON-SOLDER MASK DEFINED (PREFERRED)

SOLDER MASK DEFINED

SOLDER MASK DETAILS

4220202/B 12/2023

NOTES: (continued)

6. Publication IPC-7351 may have alternate designs.
7. Solder mask tolerances between and around signal pads can vary based on board fabrication site.

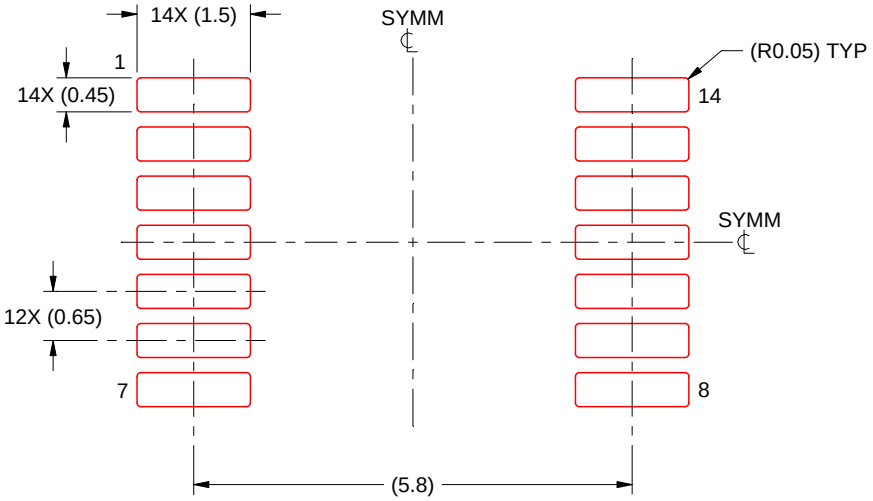

SOLDER PASTE EXAMPLE
BASED ON 0.125 mm THICK STENCIL
SCALE: 10X

4220202/B 12/2023

NOTES: (continued)

8. Laser cutting apertures with trapezoidal walls and rounded corners may offer better paste release. IPC-7525 may have alternate design recommendations.
9. Board assembly site may have different recommendations for stencil design.

IMPORTANT NOTICE AND DISCLAIMER

TI PROVIDES TECHNICAL AND RELIABILITY DATA (INCLUDING DATASHEETS), DESIGN RESOURCES (INCLUDING REFERENCE DESIGNS), APPLICATION OR OTHER DESIGN ADVICE, WEB TOOLS, SAFETY INFORMATION, AND OTHER RESOURCES “AS IS” AND WITH ALL FAULTS, AND DISCLAIMS ALL WARRANTIES, EXPRESS AND IMPLIED, INCLUDING WITHOUT LIMITATION ANY IMPLIED WARRANTIES OF MERCHANTABILITY, FITNESS FOR A PARTICULAR PURPOSE OR NON-INFRINGEMENT OF THIRD PARTY INTELLECTUAL PROPERTY RIGHTS.

These resources are intended for skilled developers designing with TI products. You are solely responsible for (1) selecting the appropriate TI products for your application, (2) designing, validating and testing your application, and (3) ensuring your application meets applicable standards, and any other safety, security, regulatory or other requirements.

These resources are subject to change without notice. TI grants you permission to use these resources only for development of an application that uses the TI products described in the resource. Other reproduction and display of these resources is prohibited. No license is granted to any other TI intellectual property right or to any third party intellectual property right. TI disclaims responsibility for, and you fully indemnify TI and its representatives against any claims, damages, costs, losses, and liabilities arising out of your use of these resources.

TI’s products are provided subject to TI’s Terms of Sale, TI’s General Quality Guidelines, or other applicable terms available either on ti.com or provided in conjunction with such TI products. TI’s provision of these resources does not expand or otherwise alter TI’s applicable warranties or warranty disclaimers for TI products. Unless TI explicitly designates a product as custom or customer-specified, TI products are standard, catalog, general purpose devices.

TI objects to and rejects any additional or different terms you may propose.

Copyright © 2026, Texas Instruments Incorporated

Last updated 10/2025