Safety mmWave + Safety PMIC Block Diagram

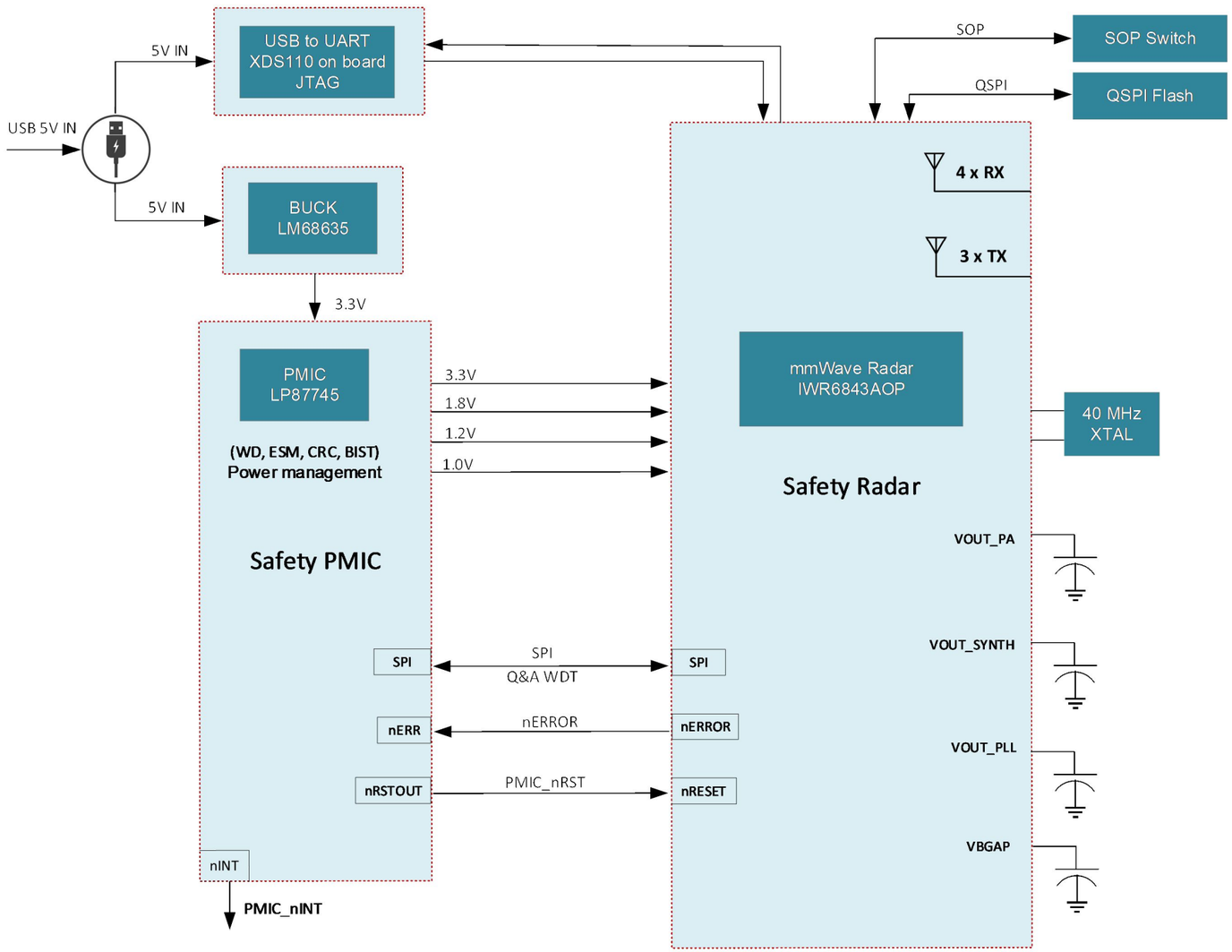

Texas Instruments and/or its licensors do not warrant the accuracy or completeness of this specification or any information contained therein. Texas Instruments and/or its licensors do not warrant that this design will meet the specifications, will be suitable for your application or fit for any particular purpose, or will operate in an implementation. Texas Instruments and/or its licensors do not warrant that the design is production worthy. You should completely validate and test your design implementation to confirm the system functionality for your application.

Orderable: IWR6843AOPEVM	Designed for: Public Release	Mod. Date: 8/22/2025
TID #: TIDA-010281	Project Title: Safety mmWave radar with safety PMIC design	
Number: N/A Rev: A	Sheet Title: BLOCK_DIAGRAM	
SVN Rev: 16110	Assembly Variant: 001	Sheet: 1 of 10
Drawn By: Antony/Bala	File: TIDA-010281_BLOCK_DIAGRAM.SchDoc	Size: B
Engineer: Preeti Udapudi	Contact: http://www.ti.com/support	

Texas Instruments
http://www.ti.com

© Texas Instruments N/A

TABLE OF CONTENTS

SHEET NO.	SHEET NAME
1	BLOCK DIAGRAM
2	TABLE OF CONTENTS
3	AOP_IO
4	AOP_PWR
5	PMIC_BUCK
6	QSPI FLASH & USB & SOP
7	RESET SWITCH
8	XDS110 INTERFACE 1A
9	XDS110 INTERFACE 1B
10	HARDWARE

Texas Instruments and/or its licensors do not warrant the accuracy or completeness of this specification or any information contained therein. Texas Instruments and/or its licensors do not warrant that this design will meet the specifications, will be suitable for your application or fit for any particular purpose, or will operate in an implementation. Texas Instruments and/or its licensors do not warrant that the design is production worthy. You should completely validate and test your design implementation to confirm the system functionality for your application.

Orderable: IWR6843AOPEVM	Designed for: Public Release	Mod. Date: 8/14/2025
TID #: TIDA-010281	Project Title: Safety mmWave radar with safety PMIC design	
Number: N/A Rev: A	Sheet Title: TABLE_OF_CONTENTS	
SVN Rev:	Assembly Variant: 001	Sheet: 2 of 10
Drawn By: Antony/Bala	File: TIDA-010281_TABLEOFCONTENTS.SchDoc	Size: B
Engineer: Preeti Udapudi	Contact: http://www.ti.com/support	

TEXAS INSTRUMENTS
http://www.ti.com

© Texas Instruments N/A

SOP_MODE2 - '011' - DEV/DEBUG
SOP_MODE4 - '001' - FUNCTIONAL MODE
SOP_MODE5 - '101' - FLASH MODE

AOP IO

40MHz CRYSTAL

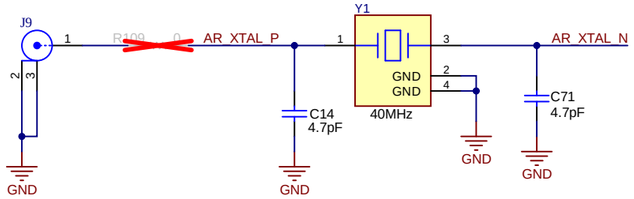

Avoid stubs on XTAL pins.

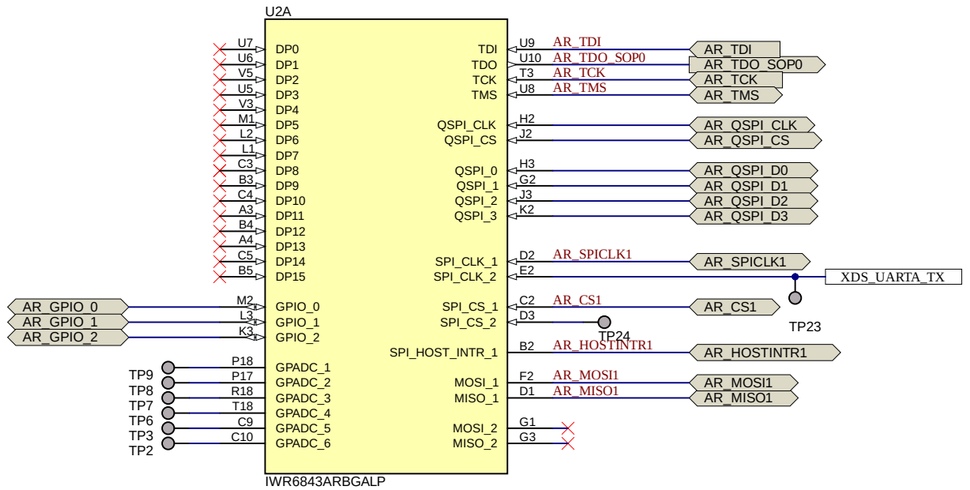

SOP OPTIONS

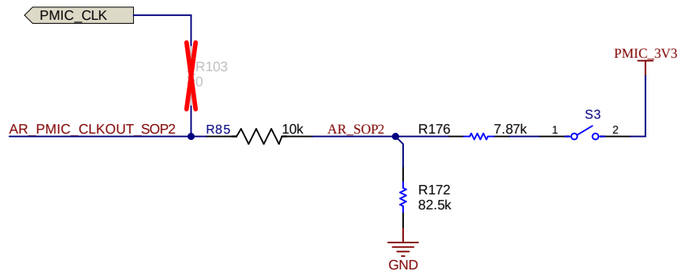

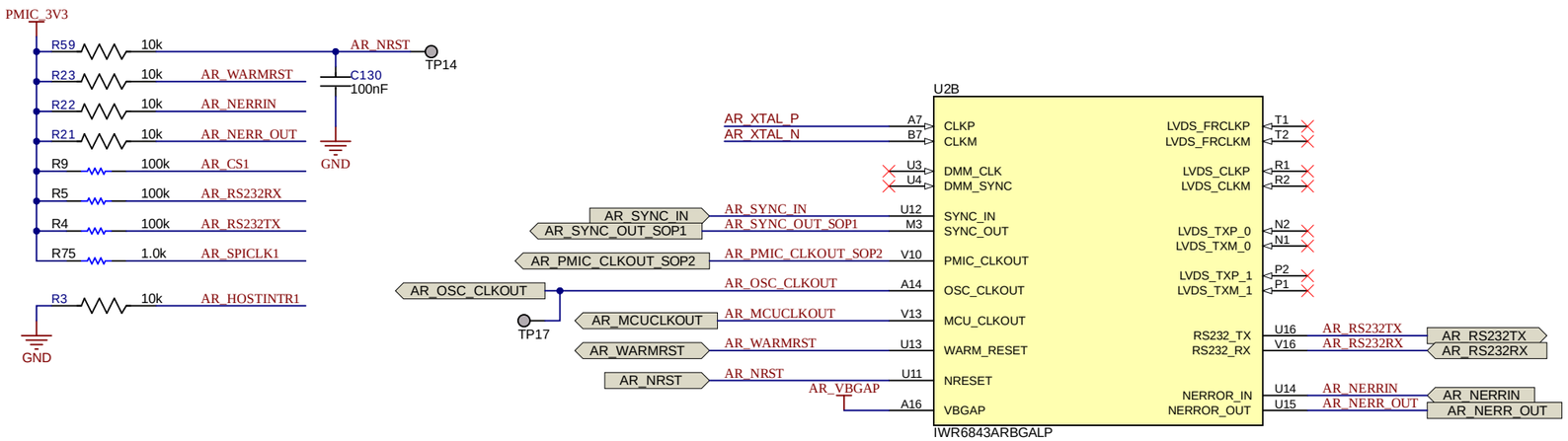

Orderable: IWR6843AOPEVM		Designed for: Public Release	Mod. Date: 11/10/2026
TID #: TIDA-010281		Project Title: Safety mmWave radar with safety PMIC design	
Number: N/A	Rev: A	Sheet Title: AOP_IO	
SVN Rev: 16241 [Locally Modified]		Assembly Variant: 001	Sheet: 3 of 10
Drawn By: Antony/Bala		File: TIDA-010281_AOP_IO.SchDoc	Size: B
Engineer: Preeti Udapudi		Contact: http://www.ti.com/support	

Texas Instruments and/or its licensors do not warrant the accuracy or completeness of this specification or any information contained therein. Texas Instruments and/or its licensors do not warrant that this design will meet the specifications, will be suitable for your application or fit for any particular purpose, or will operate in an implementation. Texas Instruments and/or its licensors do not warrant that the design is production worthy. You should completely validate and test your design implementation to confirm the system functionality for your application.

Texas Instruments
http://www.ti.com
© Texas Instruments N/A

AOP POWER

DECOUPLING CAPS

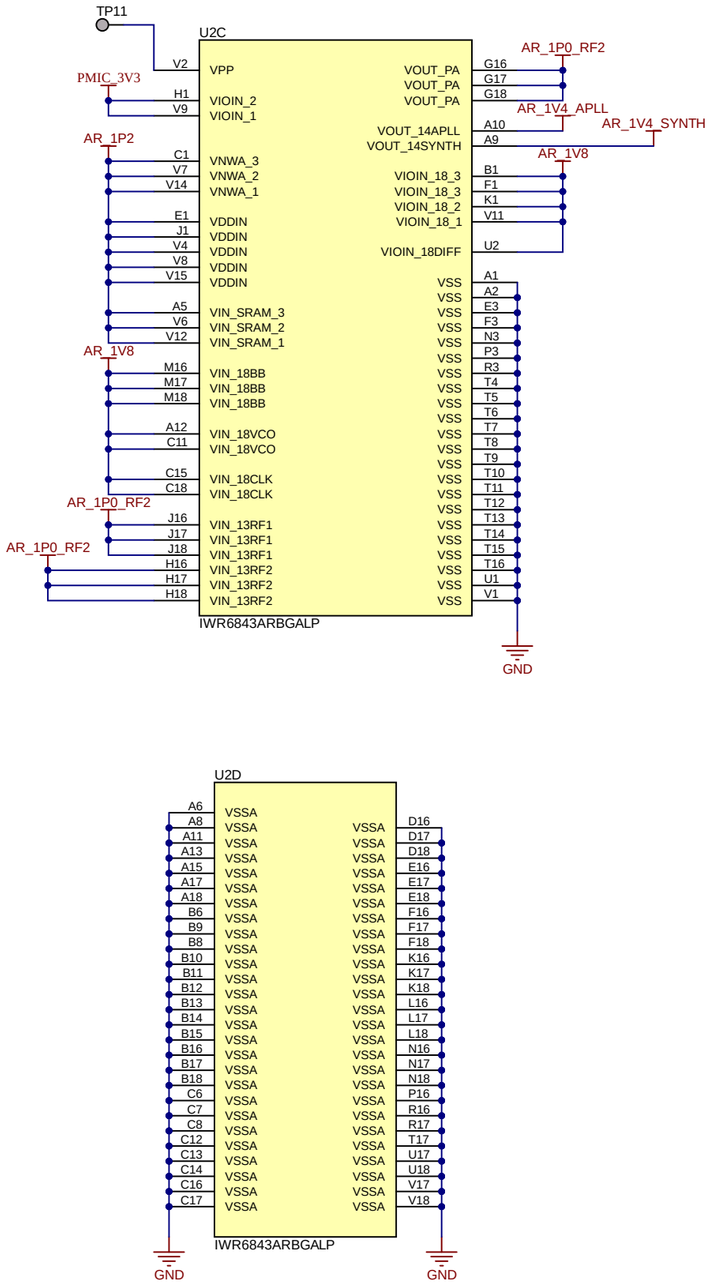

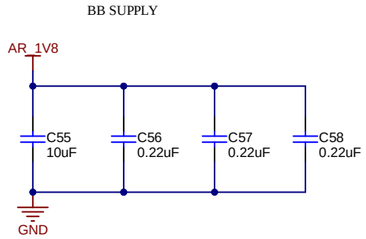

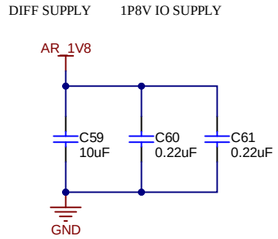

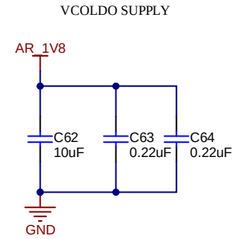

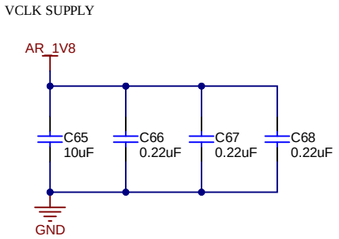

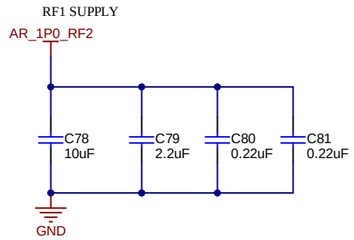

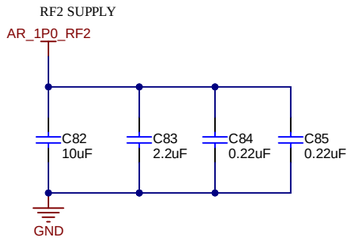

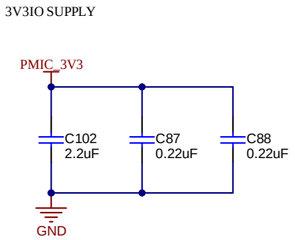

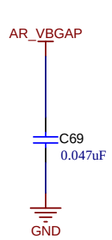

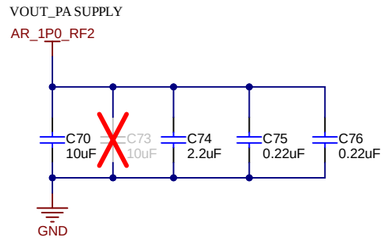

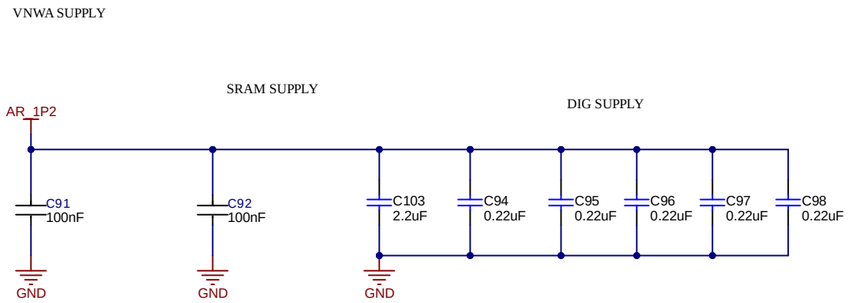

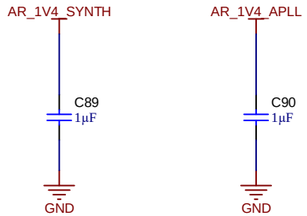

Texas Instruments and/or its licensors do not warrant the accuracy or completeness of this specification or any information contained therein. Texas Instruments and/or its licensors do not warrant that this design will meet the specifications, will be suitable for your application or fit for any particular purpose, or will operate in an implementation. Texas Instruments and/or its licensors do not warrant that the design is production worthy. You should completely validate and test your design implementation to confirm the system functionality for your application.

Orderable: IWR6843AOPEVM		Designed for: Public Release	Mod. Date: 11/10/2026
TID #: TIDA-010281		Project Title: Safety mmWave radar with safety PMIC design	
Number: N/A	Rev: A	Sheet Title: AOP_POWER	
SVN Rev: 16110 [Locally Modified]		Assembly Variant: 001	Sheet: 4 of 10
Drawn By: Antony/Bala		File: TIDA-010281_AOP_PWR.SchDoc	Size: B
Engineer: Preeti Udapudi		Contact: http://www.ti.com/support	

TEXAS INSTRUMENTS
http://www.ti.com

© Texas Instruments N/A

Buck converter (3.3V output)

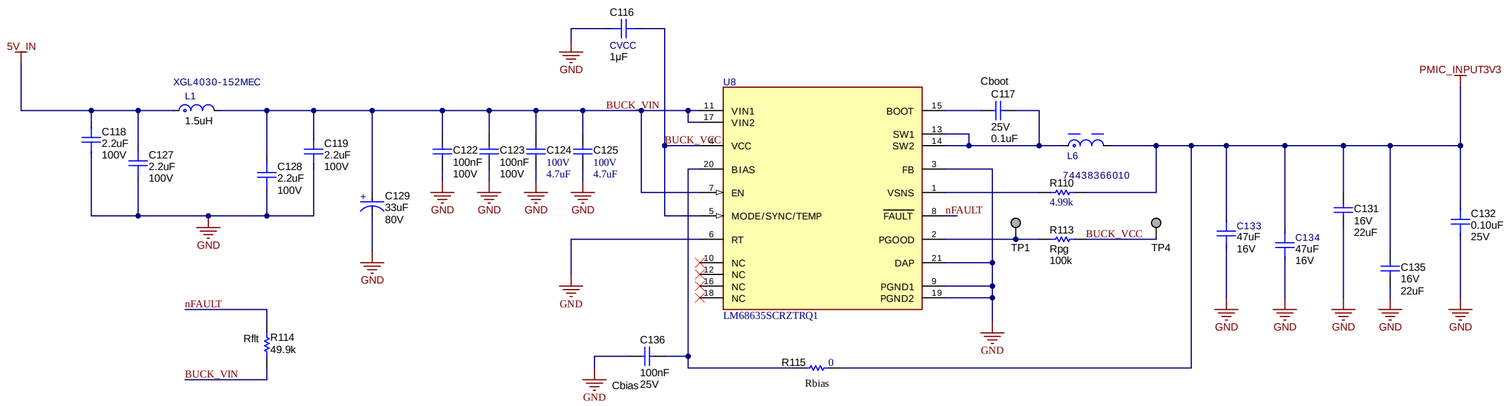

5V LED INDICATION

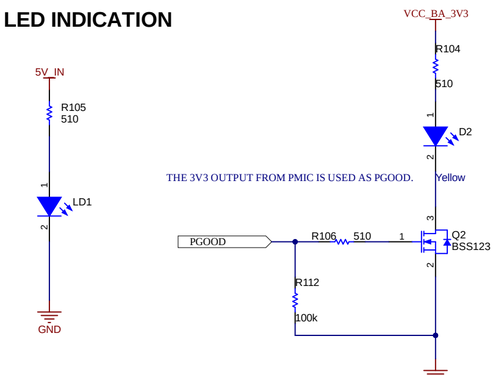

PMIC (5V, 3.3V, 1.2V, 1.0V, 1.8V OUTPUTS)

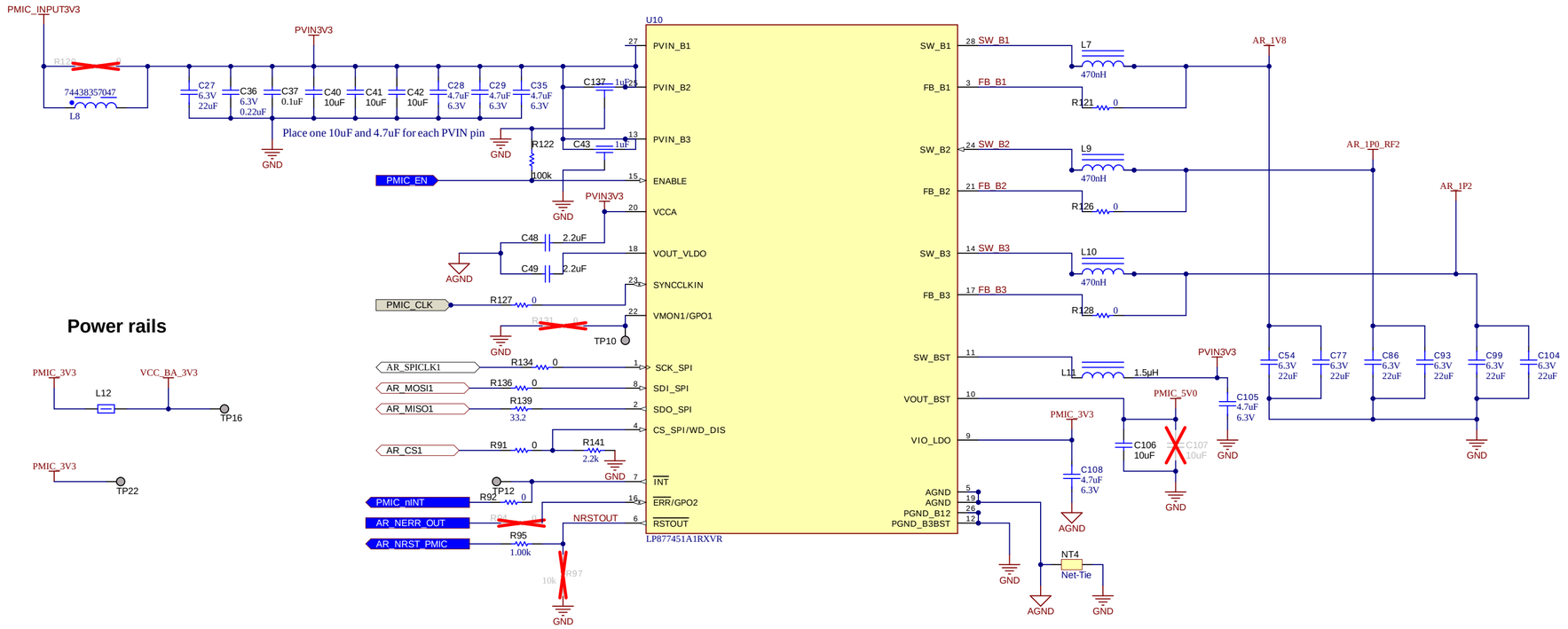

Power rails

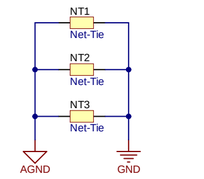



Texas Instruments and/or its licensors do not warrant the accuracy or completeness of this specification or any information contained therein. Texas Instruments and/or its licensors do not warrant that this design will meet the specifications, will be suitable for your application or fit for any particular purpose, or will operate in an implementation. Texas Instruments and/or its licensors do not warrant that the design is production worthy. You should completely validate and test your design implementation to confirm the system functionality for your application.

Orderable: IWR6843AOPEVM		Designed for: Public Release	Mod. Date: 10/26/2025
TID #: TIDA-010281		Project Title: Safety mmWave radar with safety PMIC design	
Number: N/A	Rev: A	Sheet Title:	
SVN Rev:		Assembly Variant: 001	Sheet: 5 of 10
Drawn By:		File: TIDA-010281_PMIC_BUCK.SchDoc	Size: C
Engineer: Preeti Udapudi		Contact: http://www.ti.com/support	

http://www.ti.com

© Texas Instruments N/A

USB CONNECTOR

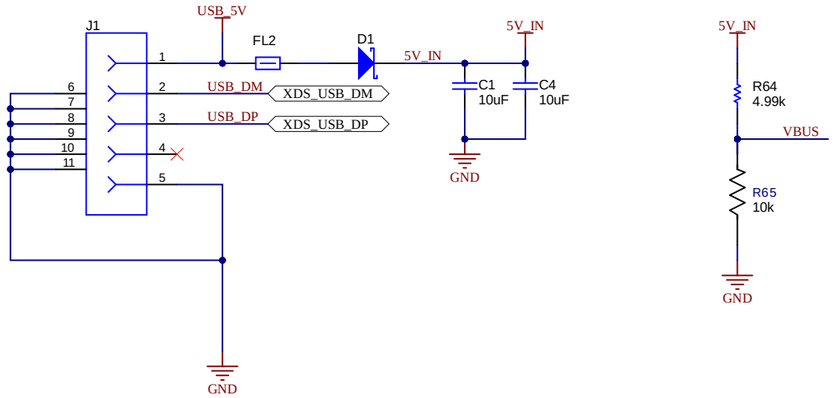

QSPI FLASH

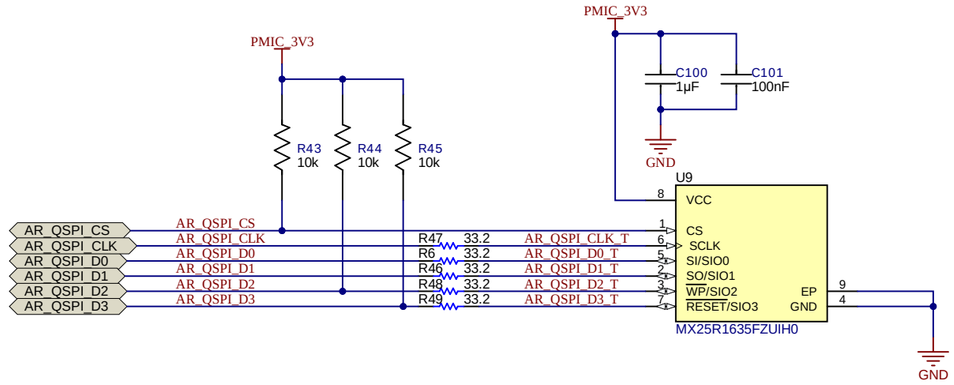

SWITCH CONTROL MUX SELECTION, SOPs, BT CONTROL

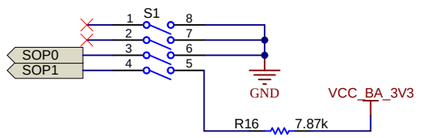

SOP CONFIGURATION

Mode	SOP0 (S1.3)	SOP1 (S1.4)	SOP2 (S3)
Functional Mode	OFF	OFF	OFF
Flash Mode	OFF	OFF	ON
MMWAVEICEBOOST mode (DCA1000, JTAG, and so forth)	OFF	ON	OFF

PIN MUX SETTINGS

Designator	Switch ON	Switch OFF
S1.1	Breakaway UART	CP2105UART
S1.2	60 Pin UART	BT UART
S2.1	CAN	SPI
S2.2	60 Pin CS	BT/LCD CS
S2.3	BT Enable	BT Disable

PIN MUX SETTINGS

	S1.1	S1.2	S2.1	S2.2	S2.3
Stand alone Mode	OFF	N/A	N/A	N/A	N/A
MMWAVEICEBOOST	ON	ON	OFF	OFF	N/A

Texas Instruments and/or its licensors do not warrant the accuracy or completeness of this specification or any information contained therein. Texas Instruments and/or its licensors do not warrant that this design will meet the specifications, will be suitable for your application or fit for any particular purpose, or will operate in an implementation. Texas Instruments and/or its licensors do not warrant that the design is production worthy. You should completely validate and test your design implementation to confirm the system functionality for your application.

Orderable: IWR6843AOPEVM	Designed for: Public Release	Mod. Date: 8/22/2025
TID #: TIDA-010281	Project Title: Safety mmWave radar with safety PMIC design	
Number: N/A Rev: A	Sheet Title: FLASH&USB_TO_UART	
SVN Rev:	Assembly Variant: 001	Sheet: 6 of 10
Drawn By: Antony/Bala	File: TIDA-010281_FLASH_USB_SOP.SchDoc	Size: B
Engineer: Preeti Udapudi	Contact: http://www.ti.com/support	

Texas Instruments
http://www.ti.com
© Texas Instruments N/A

PULL-UPs

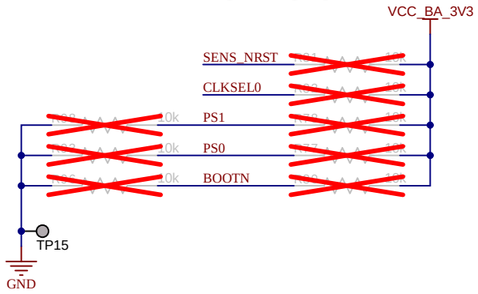

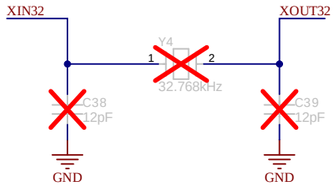

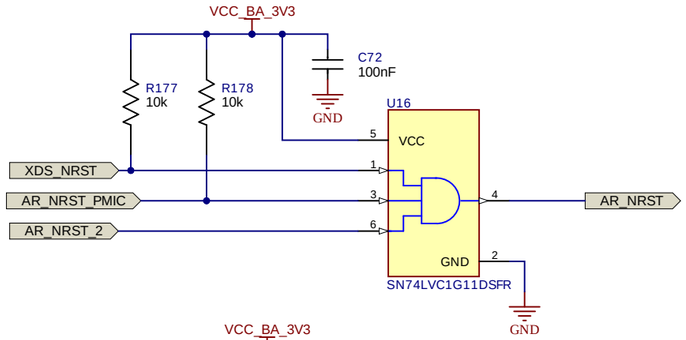

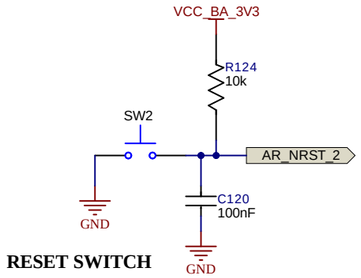

RESET SWITCH

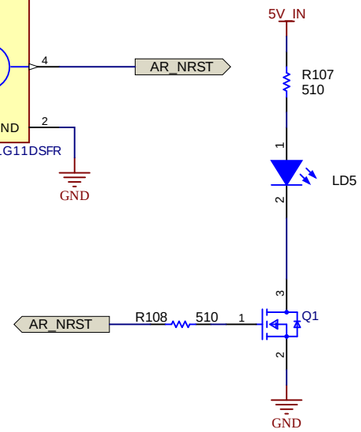

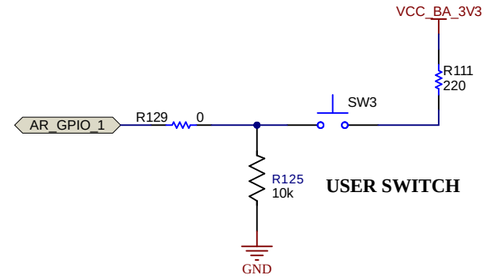

USER SWITCH

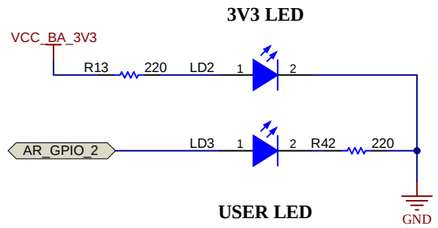

USER LED

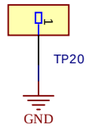

Texas Instruments and/or its licensors do not warrant the accuracy or completeness of this specification or any information contained therein. Texas Instruments and/or its licensors do not warrant that this design will meet the specifications, will be suitable for your application or fit for any particular purpose, or will operate in an implementation. Texas Instruments and/or its licensors do not warrant that the design is production worthy. You should completely validate and test your design implementation to confirm the system functionality for your application.

Orderable: IWR6843AOPEVM		Designed for: Public Release	Mod. Date: 8/14/2025
TID #: TIDA-010281		Project Title: Safety mmWave radar with safety PMIC design	
Number: N/A	Rev: A	Sheet Title: BREAKAWAY_SECTION2	
SVN Rev:		Assembly Variant: 001	Sheet: 7 of 10
Drawn By: Antony/Bala		File: TIDA-010281_RST_SWITCH.SchDoc	Size: B
Engineer: Preeti Udapudi		Contact: http://www.ti.com/support	

Texas Instruments
http://www.ti.com

© Texas Instruments N/A

XDS110(1/2)

5V TO 3.3V LDO

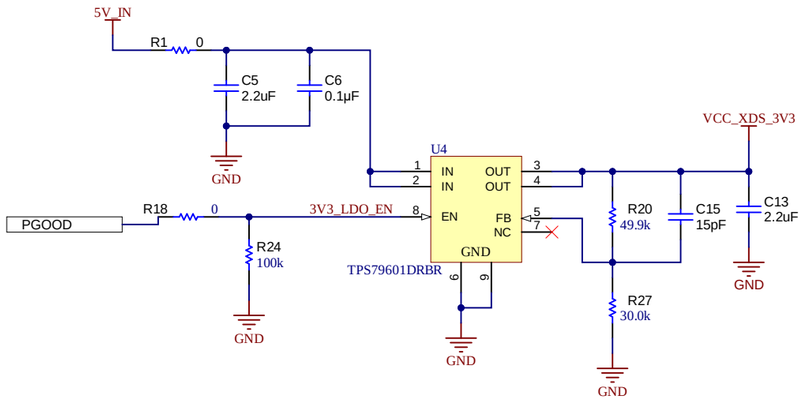

By Default LDO is disabled
When 3V3 DC-DC regulator is powered up, then it gets enabled

VBUS_DETECT

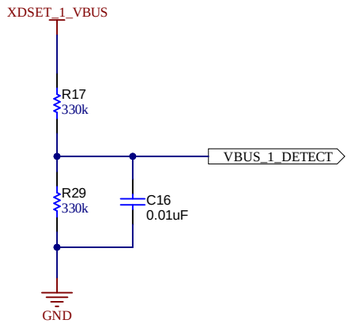

DECOUPLING CAPACITORS - XDS110

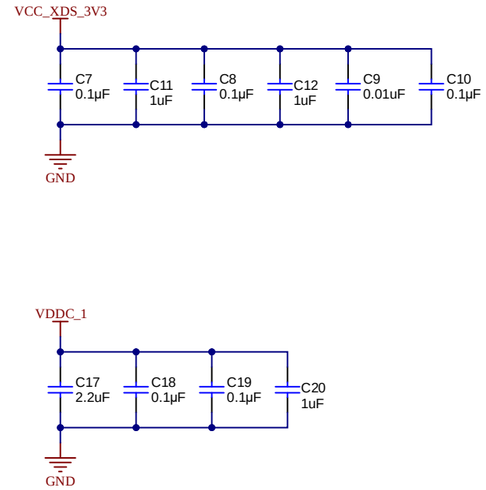

Texas Instruments and/or its licensors do not warrant the accuracy or completeness of this specification or any information contained therein. Texas Instruments and/or its licensors do not warrant that this design will meet the specifications, will be suitable for your application or fit for any particular purpose, or will operate in an implementation. Texas Instruments and/or its licensors do not warrant that the design is production worthy. You should completely validate and test your design implementation to confirm the system functionality for your application.

Orderable: IWR6843AOPEVM	Designed for: Public Release	Mod. Date: 10/17/2025
TID #: TIDA-010281	Project Title: Safety mmWave radar with safety PMIC design	
Number: N/A Rev: A	Sheet Title:	
SVN Rev:	Assembly Variant: 001	Sheet: 8 of 10
Drawn By:	File: TIDA-010281_XDS110_interface_1A.SchDoc	Size: B
Engineer: Preeti Udapudi	Contact: http://www.ti.com/support	

TEXAS INSTRUMENTS
http://www.ti.com

© Texas Instruments N/A

XDS110 - INTERFACE



XDS110 - POWER

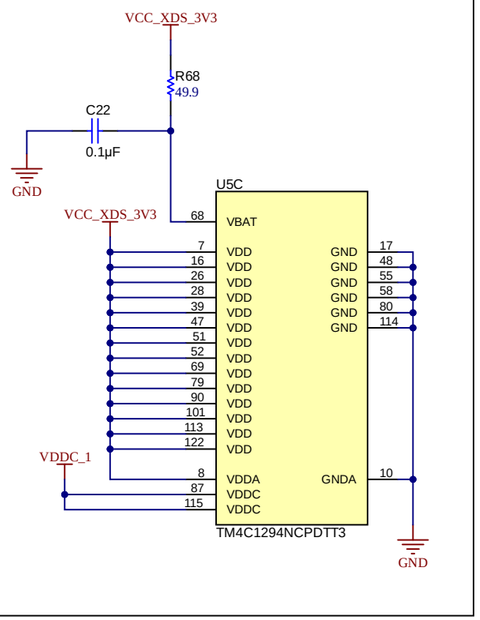

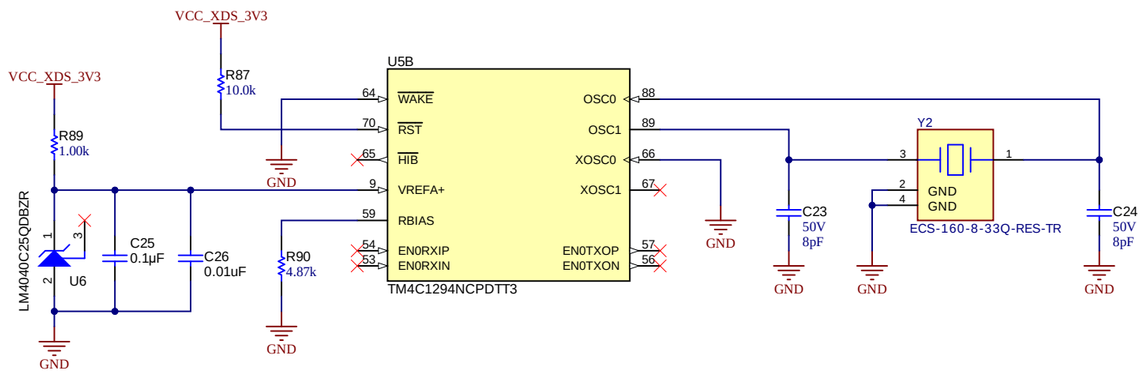

Texas Instruments and/or its licensors do not warrant the accuracy or completeness of this specification or any information contained therein. Texas Instruments and/or its licensors do not warrant that this design will meet the specifications, will be suitable for your application or fit for any particular purpose, or will operate in an implementation. Texas Instruments and/or its licensors do not warrant that the design is production worthy. You should completely validate and test your design implementation to confirm the system functionality for your application.

Orderable: IWR6843AOPEVM		Designed for: Public Release	Mod. Date: 8/18/2025
TID #: TIDA-010281		Project Title: Safety mmWave radar with safety PMIC design	
Number: N/A	Rev: A	Sheet Title:	
SVN Rev:		Assembly Variant: 001	Sheet: 9 of 10
Drawn By:		File: TIDA-010281_XDS110_interface_1B.SchDoc	Size: B
Engineer: Preeti Udapudi		Contact: http://www.ti.com/support	

Texas Instruments
http://www.ti.com

© Texas Instruments N/A

HARDWARE

FID1 FID2 FID3 FID4 FID5 FID6

PCB Number: N/A
PCB Rev: A

PCB LOGO
Texas Instruments

CE Mark

PCB LOGO
FCC disclaimer

PCB LOGO
WEEE logo

PCB LOGO
ESD Susceptible



CAUTION HOT SURFACE

LBL1
PCB Label
THT-14-423-10
Size: 0.65" x 0.20 "

LBL2
PCB Label
THT-14-423-10
Size: 0.65" x 0.20 "

ZZ1
Label Assembly Note
This Assembly Note is for PCB labels only

Variant/Label Table	
Variant	Label Text
001	IWR6843AOPEVM
002	AWR6843AOPEVM

H1
MECH

H2
MECH

H3
MECH

ZZ2
Assembly Note
These assemblies are ESD sensitive, ESD precautions shall be observed.

ZZ3
Assembly Note
These assemblies must be clean and free from flux and all contaminants. Use of no clean flux is not acceptable.

ZZ4
Assembly Note
These assemblies must comply with workmanship standards IPC-A-610 Class 2, unless otherwise specified.

ZZ5.1
Assembly Note
Cut the thermal pad(Part Number#GPVOUS-0.125-AC-0816) for the shape and size of the inner surface of the heatsink(Part Number#MCH054) and paste it on the inner surface of the heatsink;

ZZ5.2
Assembly Note
Bring the heatsink onto the PCB bottom side (Opposite side of AOP device). Match the teeth in the heatsink with break-away area in the PCB and press the heatsink onto the PCB slightly so as thermal pad is spread all over the area

Texas Instruments and/or its licensors do not warrant the accuracy or completeness of this specification or any information contained therein. Texas Instruments and/or its licensors do not warrant that this design will meet the specifications, will be suitable for your application or fit for any particular purpose, or will operate in an implementation. Texas Instruments and/or its licensors do not warrant that the design is production worthy. You should completely validate and test your design implementation to confirm the system functionality for your application.

© Texas Instruments N/A

IMPORTANT NOTICE AND DISCLAIMER

TI PROVIDES TECHNICAL AND RELIABILITY DATA (INCLUDING DATASHEETS), DESIGN RESOURCES (INCLUDING REFERENCE DESIGNS), APPLICATION OR OTHER DESIGN ADVICE, WEB TOOLS, SAFETY INFORMATION, AND OTHER RESOURCES “AS IS” AND WITH ALL FAULTS, AND DISCLAIMS ALL WARRANTIES, EXPRESS AND IMPLIED, INCLUDING WITHOUT LIMITATION ANY IMPLIED WARRANTIES OF MERCHANTABILITY, FITNESS FOR A PARTICULAR PURPOSE OR NON-INFRINGEMENT OF THIRD PARTY INTELLECTUAL PROPERTY RIGHTS.

These resources are intended for skilled developers designing with TI products. You are solely responsible for (1) selecting the appropriate TI products for your application, (2) designing, validating and testing your application, and (3) ensuring your application meets applicable standards, and any other safety, security, regulatory or other requirements.

These resources are subject to change without notice. TI grants you permission to use these resources only for development of an application that uses the TI products described in the resource. Other reproduction and display of these resources is prohibited. No license is granted to any other TI intellectual property right or to any third party intellectual property right. TI disclaims responsibility for, and you fully indemnify TI and its representatives against any claims, damages, costs, losses, and liabilities arising out of your use of these resources.

TI’s products are provided subject to TI’s Terms of Sale, TI’s General Quality Guidelines, or other applicable terms available either on ti.com or provided in conjunction with such TI products. TI’s provision of these resources does not expand or otherwise alter TI’s applicable warranties or warranty disclaimers for TI products. Unless TI explicitly designates a product as custom or customer-specified, TI products are standard, catalog, general purpose devices.

TI objects to and rejects any additional or different terms you may propose.

Copyright © 2026, Texas Instruments Incorporated

Last updated 10/2025