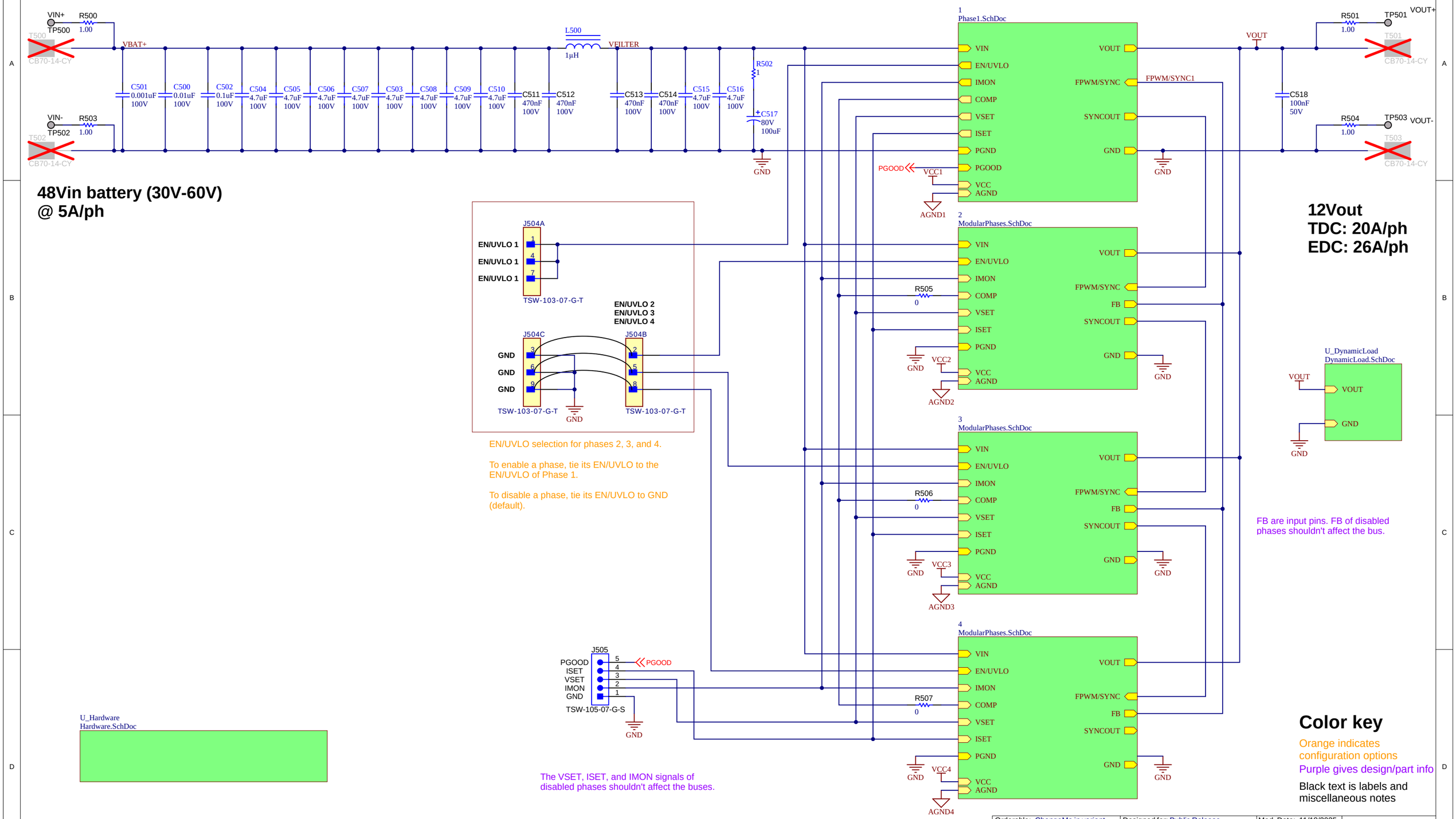

Orderable: ChangeMe in variant	Designed for: Public Release	Mod. Date: 11/18/2025	
TID #: N/A	Project Title: 4-ph 1.2kW GaNdalf		
Number: PMP23595 Rev: A	Sheet Title:		
SVN Rev: Not in version control	Assembly Variant: 001	Sheet: 1 of 4	
Drawn By:	File: TopSheet.SchDoc	Size: B	
Engineer: Hope Arnett	Contact: http://www.ti.com/support		

Texas Instruments

http://www.ti.com

© Texas Instruments 2025

Texas Instruments and/or its licensors do not warrant the accuracy or completeness of this specification or any information contained therein. Texas Instruments and/or its licensors do not warrant that this design will meet the specifications, will be suitable for your application or fit for any particular purpose, or will operate in an implementation. Texas Instruments and/or its licensors do not warrant that the design is production worthy. You should completely validate and test your design implementation to confirm the system functionality for your application.

48Vin battery (30V-60V) @ 5A/ph

Color key

Orange indicates configuration options

Purple gives design/part info

Black text is labels and miscellaneous notes

12Vout
TDC: 20A/ph
EDC: 26A/ph

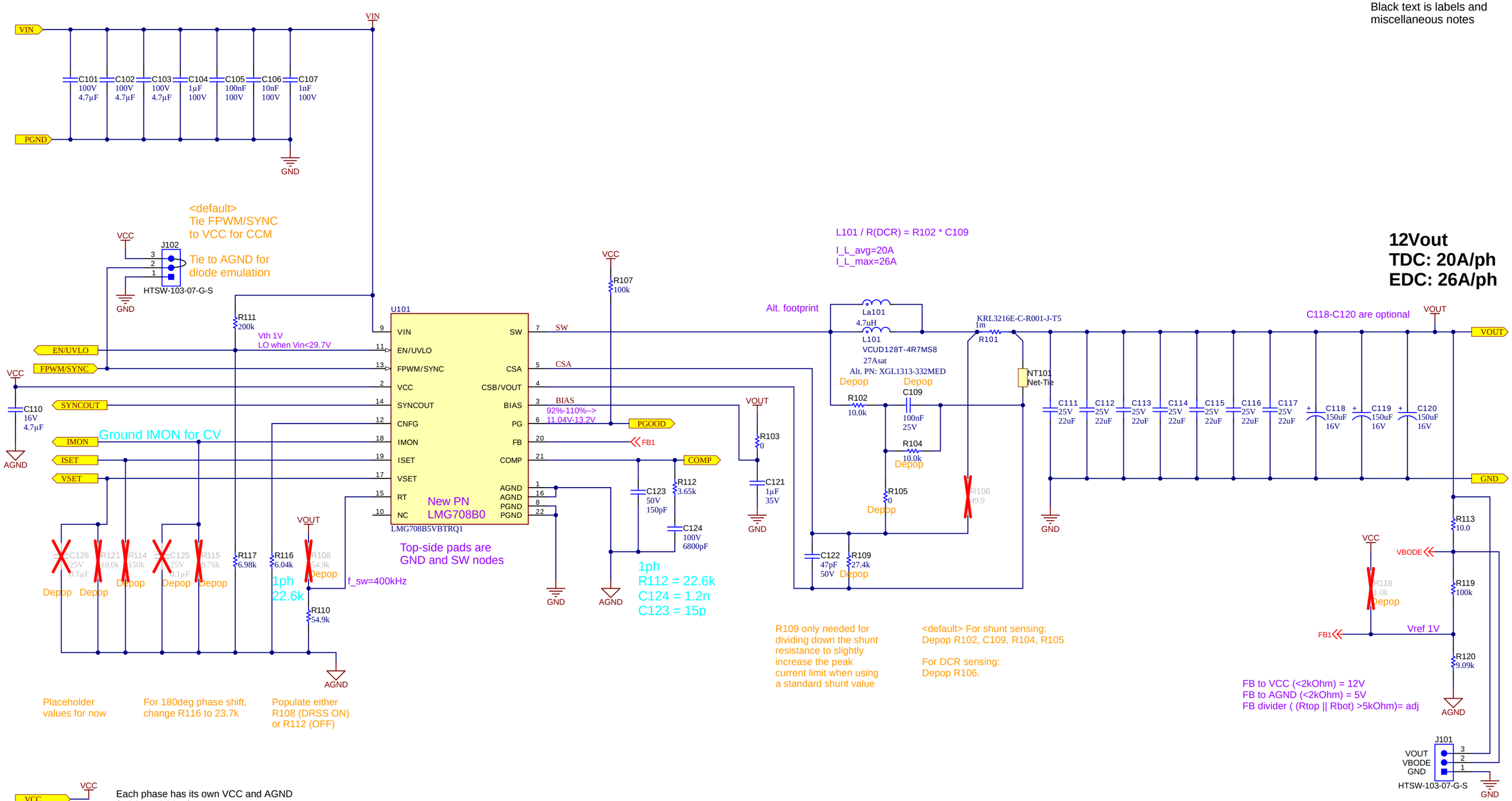

VCC — Each phase has its own VCC and AGND (VCC1, VCC2,...) (AGND1, AGND2,...)

AGND — Setting up a Port with these Power Port objects enables each instance of this sheet to have its own local instance of the power net (VCC1, VCC2, etc.)

Texas Instruments and/or its licensors do not warrant the accuracy or completeness of this specification or any information contained therein. Texas Instruments and/or its licensors do not warrant that this design will meet the specifications, will be suitable for your application or fit for any particular purpose, or will operate in an implementation. Texas Instruments and/or its licensors do not warrant that the design is production worthy. You should completely validate and test your design implementation to confirm the system functionality for your application.

Orderable: ChangeMe in variant	Designed for: Public Release	Mod. Date: 10/3/2025	
TID #: N/A	Project Title: 4-ph 1.2kW GaNdalf		
Number: PMP23595 Rev: A	Sheet Title:		
SVN Rev: Not in version control	Assembly Variant: 001	Sheet: 2 of 4	
Drawn By:	File: Phase1.SchDoc	Size: B	
Engineer: Hope Arnett	Contact: http://www.ti.com/support		

Texas Instruments
http://www.ti.com

© Texas Instruments 2025

Load transient on underside of board

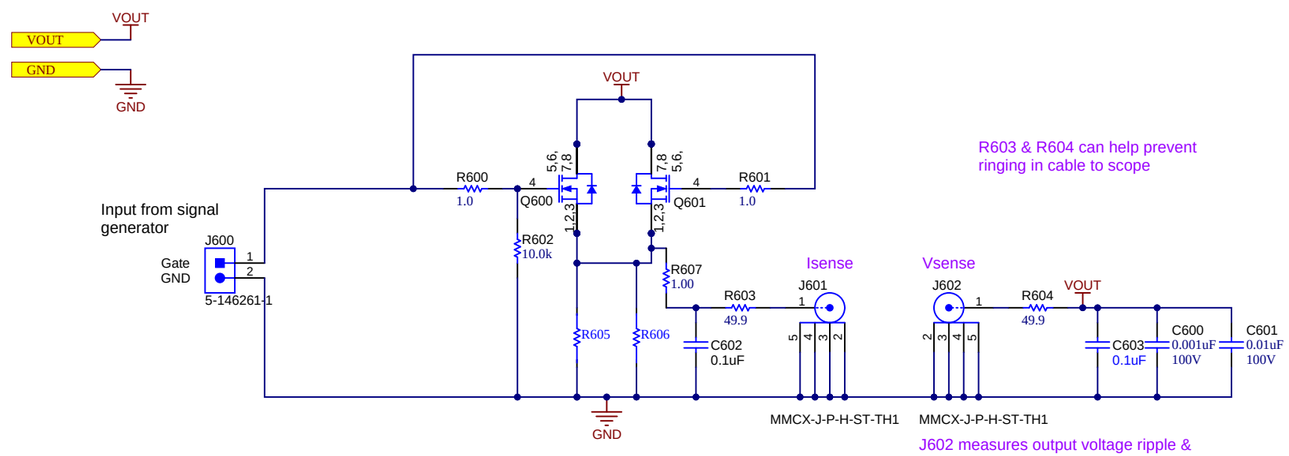

R603 & R604 can help prevent ringing in cable to scope

J602 measures output voltage ripple & transient response

RC constant of R607 and C602 can balance LR constant of R605, R606

J601 measures current pulse size & rise / fall times with measured voltage to current relationship based on the equivalent resistance of R605 || R606

Texas Instruments and/or its licensors do not warrant the accuracy or completeness of this specification or any information contained therein. Texas Instruments and/or its licensors do not warrant that this design will meet the specifications, will be suitable for your application or fit for any particular purpose, or will operate in an implementation. Texas Instruments and/or its licensors do not warrant that the design is production worthy. You should completely validate and test your design implementation to confirm the system functionality for your application.

Orderable: ChangeMe in variant	Designed for: Public Release	Mod. Date: 7/30/2025	
TID #: N/A	Project Title: 4-ph 1.2kW GaNdalf		
Number: PMP23595 Rev: A	Sheet Title:		
SVN Rev: Not in version control	Assembly Variant: 001	Sheet: 2 of 3	
Drawn By:	File: DynamicLoad.SchDoc	Size: B	
Engineer: Hope Arnett	Contact: http://www.ti.com/support		

Texas Instruments
http://www.ti.com

© Texas Instruments 2025

Color key

Orange indicates configuration options

Purple gives design/part info

Black text is labels and miscellaneous notes

48Vin battery (30V-60V) @ 5A/ph

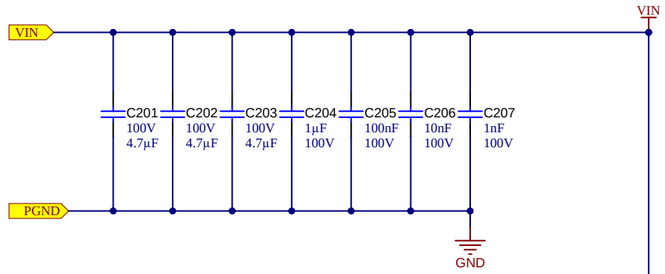

12Vout TDC: TBD EDC: 25A/ph

L2 / R(DCR) = R02 * C09

I_L_avg=20A
I_L_max=26A

All enabled phases share EN/UVLO with Phase 1

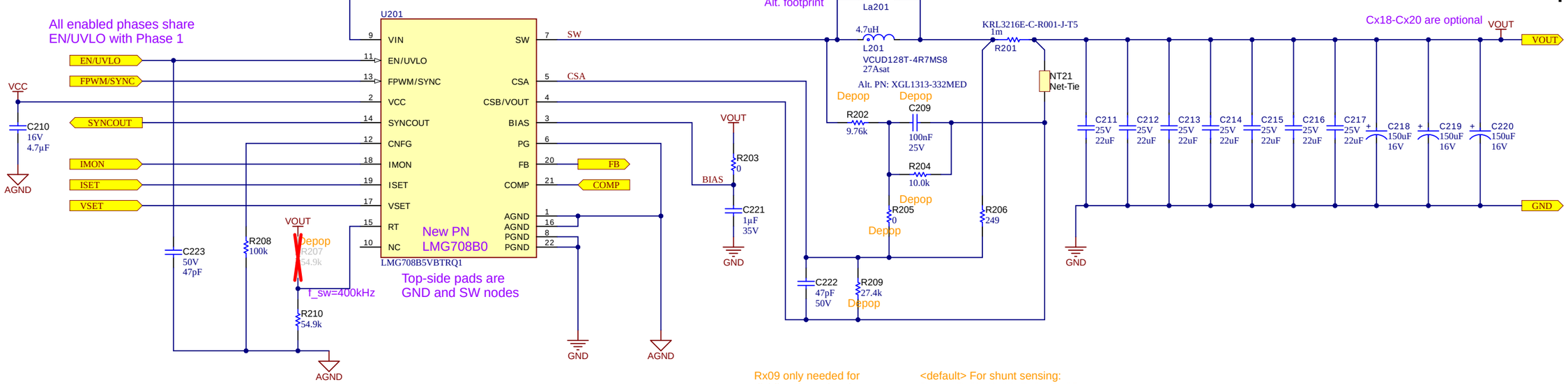

DRSS ON: Rx07
DRSS OFF: Rx10 <default>

Rx09 only needed for dividing down the shunt resistance to slightly increase the peak current limit when using a standard shunt value

<default> For shunt sensing:
Depop Rx02, Cx09, Rx04, Rx05

For DCR sensing:
Depop Rx06.

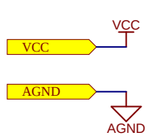

Each phase has its own VCC and AGND (VCC1, VCC2,...) (AGND1, AGND2,...)

Setting up a Port with these Power Port objects enables each instance of this sheet to have its own local instance of the power net (VCC1, VCC2, etc.)

Texas Instruments and/or its licensors do not warrant the accuracy or completeness of this specification or any information contained therein. Texas Instruments and/or its licensors do not warrant that this design will meet the specifications, will be suitable for your application or fit for any particular purpose, or will operate in an implementation. Texas Instruments and/or its licensors do not warrant that the design is production worthy. You should completely validate and test your design implementation to confirm the system functionality for your application.

Orderable: ChangeMe in variant		Designed for: Public Release	Mod. Date: 10/3/2025
TID #: N/A		Project Title: 4-ph 1.2kW GaNdalf	
Number: PMP23595	Rev: A	Sheet Title:	
SVN Rev: Not in version control		Assembly Variant: 001	Sheet: 3 of 4
Drawn By:		File: ModularPhases.SchDoc	Size: B
Engineer: Hope Arnett		Contact: http://www.ti.com/support	

Texas Instruments
http://www.ti.com

© Texas Instruments 2025

Color key

Orange indicates configuration options

Purple gives design/part info

Black text is labels and miscellaneous notes

48Vin battery (30V-60V) @ 5A/ph

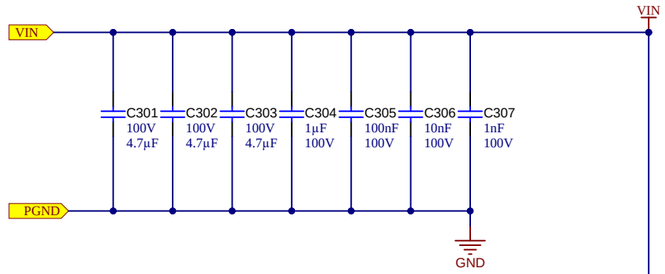

12Vout
TDC: TBD
EDC: 25A/ph

L2 / R(DCR) = R02 * C09

I_L_avg=20A
I_L_max=26A

All enabled phases share EN/UVLO with Phase 1

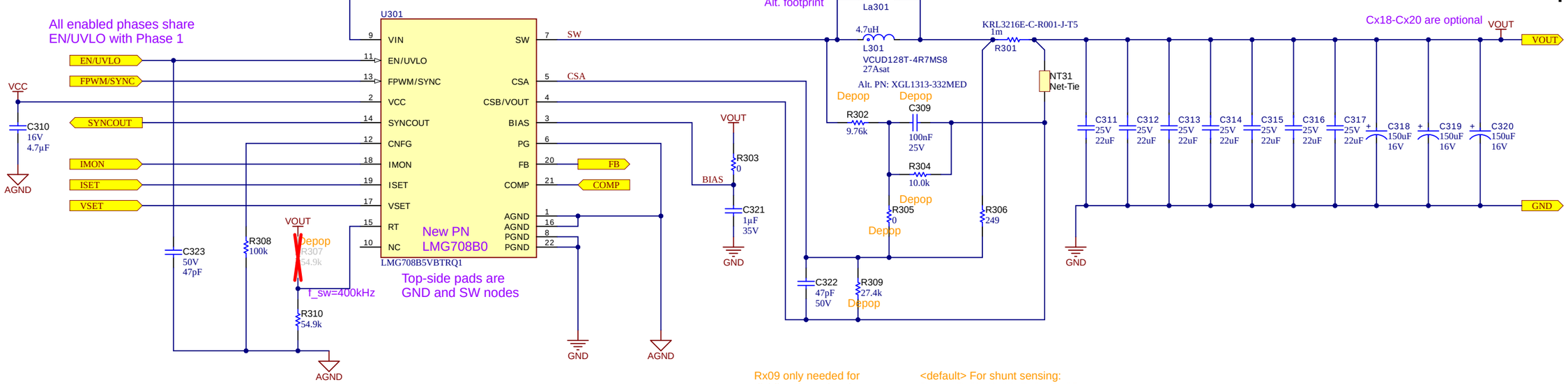

DRSS ON: Rx07
DRSS OFF: Rx10 <default>

Rx09 only needed for dividing down the shunt resistance to slightly increase the peak current limit when using a standard shunt value

<default> For shunt sensing:
Depop Rx02, Cx09, Rx04, Rx05

For DCR sensing:
Depop Rx06.

VCC
AGND

Each phase has its own VCC and AGND (VCC1, VCC2,...) (AGND1, AGND2,...)

Setting up a Port with these Power Port objects enables each instance of this sheet to have its own local instance of the power net (VCC1, VCC2, etc.)

Texas Instruments and/or its licensors do not warrant the accuracy or completeness of this specification or any information contained therein. Texas Instruments and/or its licensors do not warrant that this design will meet the specifications, will be suitable for your application or fit for any particular purpose, or will operate in an implementation. Texas Instruments and/or its licensors do not warrant that the design is production worthy. You should completely validate and test your design implementation to confirm the system functionality for your application.

Orderable: ChangeMe in variant	Designed for: Public Release	Mod. Date: 10/3/2025	
TID #: N/A	Project Title: 4-ph 1.2kW GaNdalf		
Number: PMP23595 Rev: A	Sheet Title:		
SVN Rev: Not in version control	Assembly Variant: 001	Sheet: 3 of 4	
Drawn By:	File: ModularPhases.SchDoc	Size: B	
Engineer: Hope Arnett	Contact: http://www.ti.com/support		

Texas Instruments
http://www.ti.com

© Texas Instruments 2025

Color key

Orange indicates configuration options

Purple gives design/part info

Black text is labels and miscellaneous notes

48Vin battery (30V-60V) @ 5A/ph

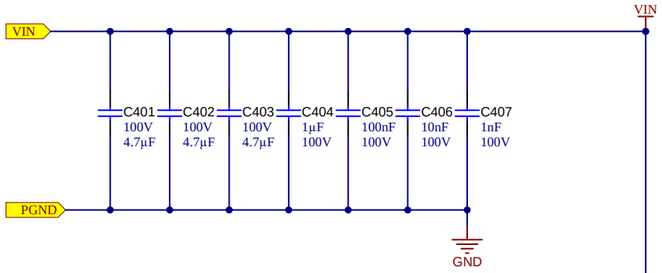

12Vout
TDC: TBD
EDC: 25A/ph

L2 / R(DCR) = R02 * C09

I_L_avg=20A
I_L_max=26A

All enabled phases share EN/UVLO with Phase 1

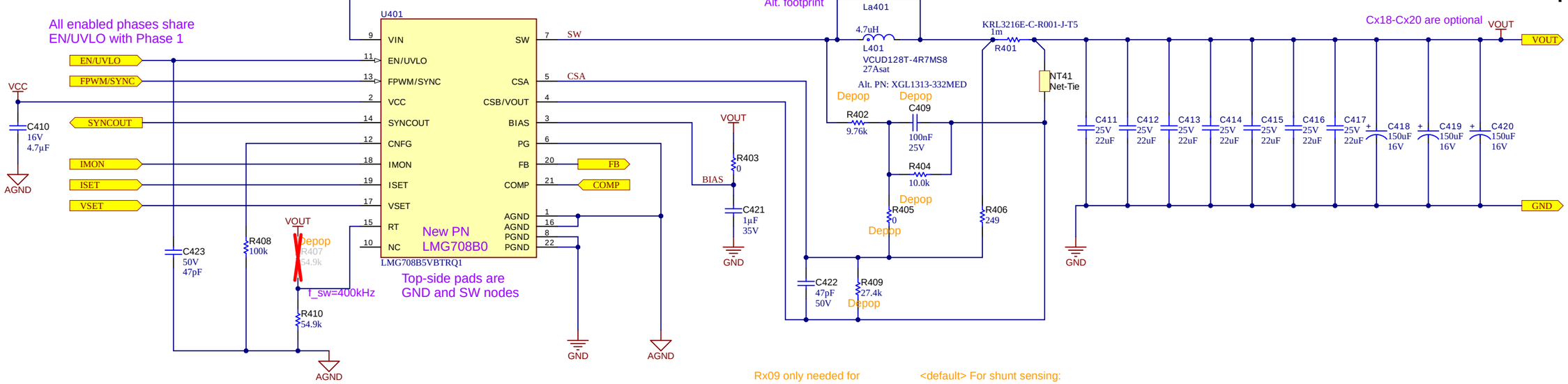

DRSS ON: Rx07
DRSS OFF: Rx10 <default>

Rx09 only needed for dividing down the shunt resistance to slightly increase the peak current limit when using a standard shunt value

<default> For shunt sensing:
Depop Rx02, Cx09, Rx04, Rx05

For DCR sensing:
Depop Rx06.

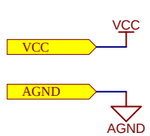

Each phase has its own VCC and AGND
(VCC1, VCC2,...)
(AGND1, AGND2,...)

Setting up a Port with these Power Port objects enables each instance of this sheet to have its own local instance of the power net (VCC1, VCC2, etc.)

Texas Instruments and/or its licensors do not warrant the accuracy or completeness of this specification or any information contained therein. Texas Instruments and/or its licensors do not warrant that this design will meet the specifications, will be suitable for your application or fit for any particular purpose, or will operate in an implementation. Texas Instruments and/or its licensors do not warrant that the design is production worthy. You should completely validate and test your design implementation to confirm the system functionality for your application.

Orderable: ChangeMe in variant	Designed for: Public Release	Mod. Date: 10/3/2025	
TID #: N/A	Project Title: 4-ph 1.2kW GaNdalf		
Number: PMP23595 Rev: A	Sheet Title:		
SVN Rev: Not in version control	Assembly Variant: 001	Sheet: 3 of 4	
Drawn By:	File: ModularPhases.SchDoc	Size: B	
Engineer: Hope Arnett	Contact: http://www.ti.com/support		

Texas Instruments
http://www.ti.com

© Texas Instruments 2025

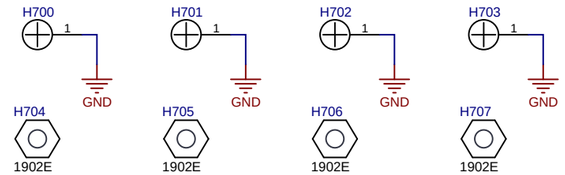

The design will have a heatsink.

One version will cover both the controllers and the inductors (to maximize heatsink surface area). Another version will just cover the controllers.

Design/manufacturing is in-progress.

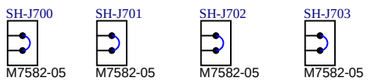

PCB Number: PMP23595
PCB Rev: A

PCB LOGO
Texas Instruments

CE Mark

PCB LOGO
FCC disclaimer

PCB LOGO
WEEE logo

Logo704

CAUTION HOT SURFACE

You should delete the nylon screws/standoffs and/or the bumpons as needed for your design (or substitute other parts from Hardware.IntLib). Bumpons are cheaper, but provide less clearance.

Deleting anything else from this page may result in your EVM submission being rejected (until you add them back).

Update the Label Text in the Label Table as needed for each Assembly Variant.

You should delete this note too.

ZZ700
Label Assembly Note
This Assembly Note is for PCB labels only

ZZ701
Assembly Note
These assemblies are ESD sensitive, ESD precautions shall be observed.

ZZ702
Assembly Note
These assemblies must be clean and free from flux and all contaminants. Use of no clean flux is not acceptable.

ZZ703
Assembly Note
These assemblies must comply with workmanship standards IPC-A-610 Class 2, unless otherwise specified.

Texas Instruments and/or its licensors do not warrant the accuracy or completeness of this specification or any information contained therein. Texas Instruments and/or its licensors do not warrant that this design will meet the specifications, will be suitable for your application or fit for any particular purpose, or will operate in an implementation. Texas Instruments and/or its licensors do not warrant that the design is production worthy. You should completely validate and test your design implementation to confirm the system functionality for your application.

Orderable: ChangeMe in variant	Designed for: Public Release	Mod. Date: 7/31/2025	
TID #: N/A	Project Title: 4-ph 1.2kW GaNdalf		
Number: PMP23595 Rev: A	Sheet Title:		
SVN Rev: Not in version control	Assembly Variant: 001	Sheet: 4 of 4	
Drawn By:	File: Hardware.SchDoc	Size: B	
Engineer: Hope Arnett	Contact: http://www.ti.com/support		

Texas Instruments
http://www.ti.com

© Texas Instruments 2025

IMPORTANT NOTICE AND DISCLAIMER

TI PROVIDES TECHNICAL AND RELIABILITY DATA (INCLUDING DATASHEETS), DESIGN RESOURCES (INCLUDING REFERENCE DESIGNS), APPLICATION OR OTHER DESIGN ADVICE, WEB TOOLS, SAFETY INFORMATION, AND OTHER RESOURCES “AS IS” AND WITH ALL FAULTS, AND DISCLAIMS ALL WARRANTIES, EXPRESS AND IMPLIED, INCLUDING WITHOUT LIMITATION ANY IMPLIED WARRANTIES OF MERCHANTABILITY, FITNESS FOR A PARTICULAR PURPOSE OR NON-INFRINGEMENT OF THIRD PARTY INTELLECTUAL PROPERTY RIGHTS.

These resources are intended for skilled developers designing with TI products. You are solely responsible for (1) selecting the appropriate TI products for your application, (2) designing, validating and testing your application, and (3) ensuring your application meets applicable standards, and any other safety, security, regulatory or other requirements.

These resources are subject to change without notice. TI grants you permission to use these resources only for development of an application that uses the TI products described in the resource. Other reproduction and display of these resources is prohibited. No license is granted to any other TI intellectual property right or to any third party intellectual property right. TI disclaims responsibility for, and you fully indemnify TI and its representatives against any claims, damages, costs, losses, and liabilities arising out of your use of these resources.

TI’s products are provided subject to TI’s Terms of Sale, TI’s General Quality Guidelines, or other applicable terms available either on ti.com or provided in conjunction with such TI products. TI’s provision of these resources does not expand or otherwise alter TI’s applicable warranties or warranty disclaimers for TI products. Unless TI explicitly designates a product as custom or customer-specified, TI products are standard, catalog, general purpose devices.

TI objects to and rejects any additional or different terms you may propose.

Copyright © 2025, Texas Instruments Incorporated

Last updated 10/2025