EVM User's Guide: TPS25762Q1EVM

TPS25762-Q1 Evaluation Module

Description

The TPS25762Q1EVM is designed to evaluate the TPS25762-Q1 for USB Type-C® and power delivery (PD) applications. This EVM supports single port PD charging and comes with three other variants: single port charging with DisplayPort™ over USB-C® (DP alt mode) (TPS25763Q1EVM), dual ports charging only (TPS25772DQ1EVM), and dual ports charging + USB 2.0 (TPS25772Q1EVM-CD-150). The EVM integrates a TIVA microcontroller, enabling online debugging and online EEPROM updates.

Device configuration settings are selected through an intuitive application customization tool in the form of a graphical user interface (TPS257XX-Q1-GUI), reducing much of the complexity associated with competitive USB-PD designs.

Get Started

1. Read the TPS25762Q1EVM user's guide (this document)
2. Start development with the graphical user interface (TPS257XX-Q1-GUI)
3. See the TPS25762-Q1 datasheet or E2E forums for questions and support

Features

- TPS25762-Q1: USB–IF certification with PPS, TID: 9509
- Charging up to 65W on Port A
- Easy-to-use GUI with preconfigured firmware to configure device
- VBUS and CCx test points for Type-C port to monitor PD traffic
- MCU for EEPROM programming and system telemetry
- Jumper configuration of all system configurable pins

Applications

- Automotive USB charging
- Automotive media hub
- Automotive head unit
- Automotive rear seat entertainment

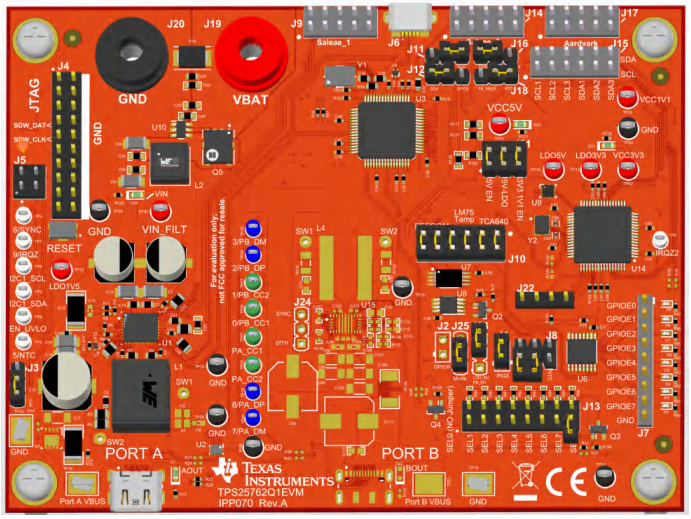

Copyright © 2026 Texas Instruments Incorporated

1 Evaluation Module Overview

1.1 Introduction

The TPS25762-Q1 is a USB PD controller that has a 65W capable buck boost converter.

The EVM is customizable through the (TPS257XX-Q1-GUI.). Additionally, the EVM is equipped with Aardvark connector to I2C interfaces and USB Micro-B interface and USB2ANY interface for debugging and development.

This user's guide describes how the TPS25762Q1EVM can be used to test PD functions. This document includes descriptions of how to use the EVM, contents, schematics, printed circuit board (PCB) layouts, and bill of materials (BOM). Throughout this document the terms evaluation board, evaluation module, and EVM are synonymous with the TPS25762Q1EVM.

1.2 Kit Contents

The EVM kit contains the (1) TPS25762Q1EVM.

1.3 Specification

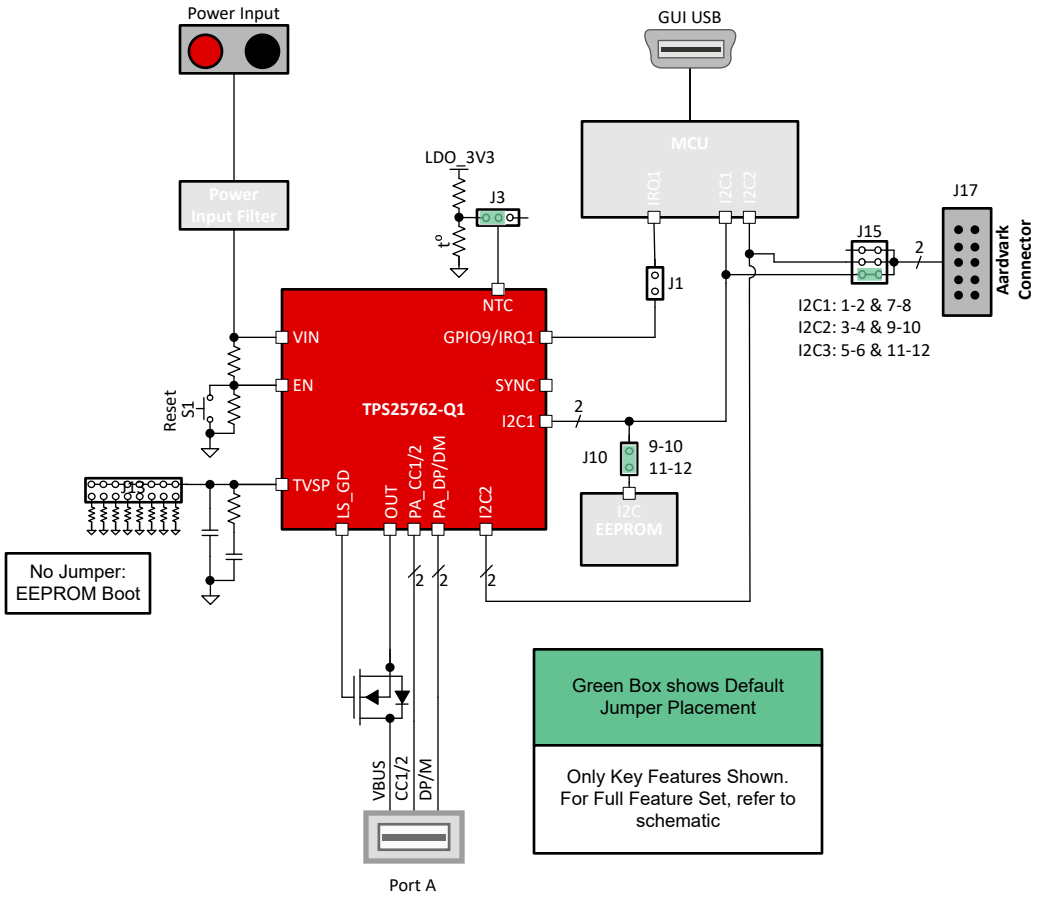

Figure 1-1. Top Level Block Diagram

1.4 Device Information

The TPS25762-Q1 is one port Type-C controller that has a 65W capable buck boost converter for Port A.

The TPS25762-Q1 implements intelligent System Power Management (SPM) to maximize delivered USB power while protecting the system from automotive battery transient and overtemperature conditions.

Copyright © 2026 Texas Instruments Incorporated

2 Hardware

2.1 Connections

Use the following connections to operate EVM successfully:

- Connect 5.5V to 18V DC power supply to the power input banana connectors
- Connect Micro Type-B USB connector to PC to use GUI to program EEPROM
- Aardvark Connector to program EEPROM
- Port A Type-C connector is provided to connect to power delivery, Type-C sink devices, or test equipment

Table 2-1. TPS25762Q1 EVM Configuration for Basic Operation

Jumper	Connection	Description
J1	Jumper installed	IRQ1 Connected to USB MCU used by GUI
J3	Jumper installed between pins 1-2	NTC pin of the TPS25762-Q1 connected to the EVM PTC
J10	Jumpers installed between pins 9-10 and 11-12	PCB EEPROM connected to the TPS25762-Q1
J13	Jumper not installed	TPS25762-Q1 configured to boot from EEPROM1
J15	Jumpers installed between pins 1-2 and 7-8	I2C1 connected to the Aardvark connector (J17)

2.2 Setup

Items Required for Operation

- TPS25762-Q1 Automotive USB Type-C® Power Delivery Controller with Buck-Boost Regulator datasheet
- TPS257XX-Q1-GUI
- 5.5V to 18V DC power supply
- Passive USB Type-C e-marker cable
- UFP emulator for Port A
- USB Type-A to USB Micro-B cable
- Notebook with USB 2.0 capabilities

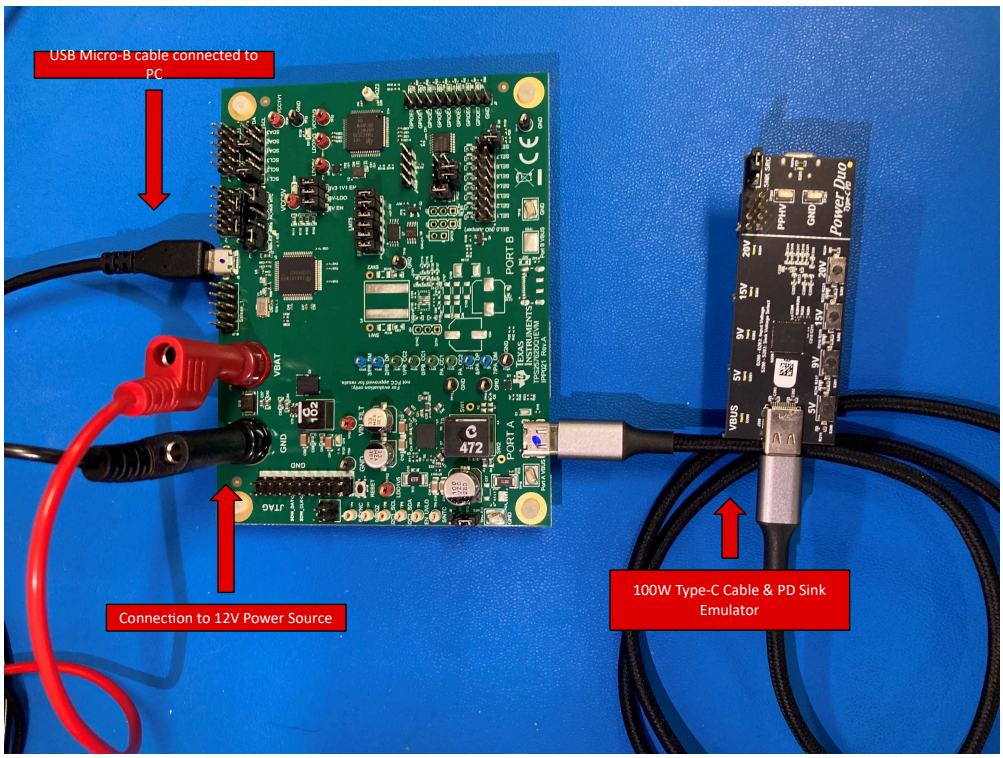

Figure 2-1. EVM Setup

Copyright © 2026 Texas Instruments Incorporated

2.3 Header Information

J17 Aardvark Connector

This connector is configured to allow the Total Phase Aardvark to connect directly to the EVM. One or more I2C bus can be connected to the Aardvark connector by connecting jumpers on J15. When making this connection, both the SCL1/2/3 and SDA1/2/3 must be selected by installing the jumper.

- I2C1 connects to the I2C controller of the TPS25762-Q1
- I2C2 connects to I2C2 of the TPS25762-Q1 (dependent on EVM configuration) and the TIVA MCU
- I2C3 connects to the TIVA MCU

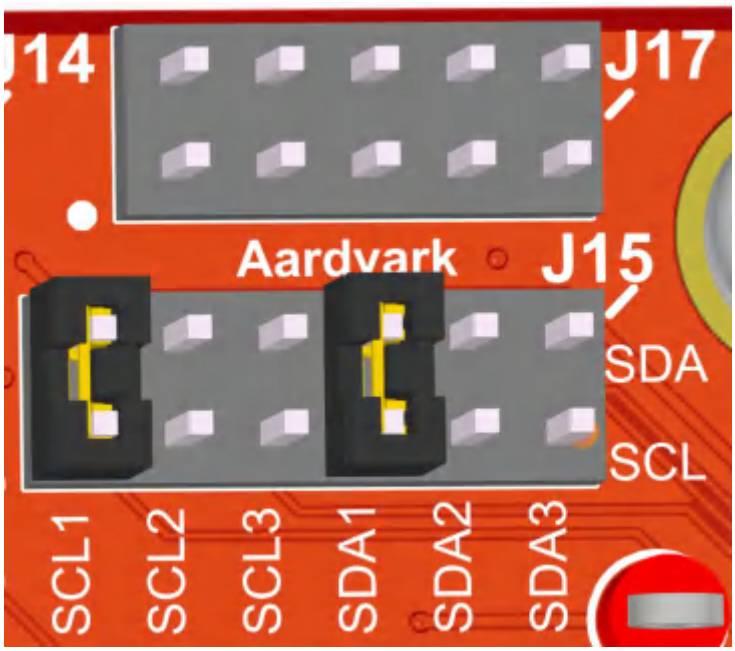

Figure 2-2. J17 Aardvark Connector

Table 2-2. J17 Aardvark Connector and J15I2C Selection Jumper

Pin Number	Pin or Jumper			Description
1	J15	1:2	I2C_SCL1	Select between the 3 possible I2C connections on the EVM.
		3:4	I2C_SCL2	
		5:6	I2C_SCL3	
2	GND			Ground Reference
3	J15	7:8	I2C_SDA1	Select between the 3 possible I2C connections on the EVM.
		9:10	I2C_SDA2	
		11:12	I2C_SDA3	
4	Aard1_5V			5V Supply from the Aardvark connection. Not used on the EVM, but present for potential use in debug
5	No Connection			
6	Aard1_5V			5V Supply from the Aardvark connection. Not used on the EVM, but present for potential use in debug
7	No Connection			
8	No Connection			
9	No Connection			
10	GND			Ground Reference

Copyright © 2026 Texas Instruments Incorporated

J9 and J14 Debug Headers

These headers are included to allow the EVM to connect a debug digitizer with a range of 10V.

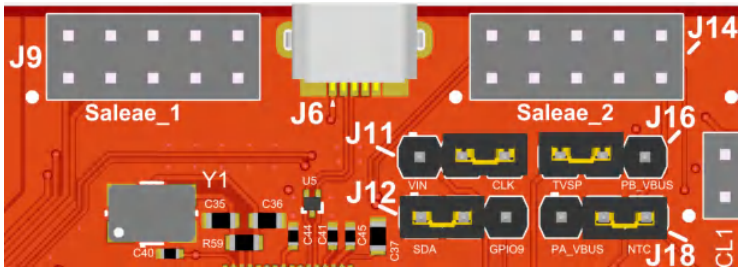

Figure 2-3. Debug Headers

Table 2-3. J9 and J14 Debug Headers

Pin	J9	Description			J14	Description		
1	PA_CC1	Observe Port A CC1			PA_D_P	Observe Port A D_P		
2	PA_CC2	Observe Port A CC2			PA_D_N	Observe Port A D_N		
3	0.4*PA_VBUS	Observe Port A VBUS scaled to 40% of full scape to fit 10V input range of the digitizer			PB_D_P	Observe Port B D_P		
4	PB_CC1	Observe Port B CC1			PB_D_N	Observe Port B D_N		
5	GND				GND	Ground reference		
6	GND				GND	Ground reference		
7	PB_CC2	Observe Port B CC2			NTC or 0.4*PA_VBUS	J18	1:2	Observe Port A VBUS scaled to 40% of full scape to fit 10V input range of the digitizer
							2:3	Observe NTC pin of TPS25762-Q1
8	0.4*PB_VBUS	Observe Port B VBUS scaled to 40% of full scape to fit 10V input range of the digitizer			TVSP or 0.4*PB_VBUS	J16	1:2	Observe TVSP pin of TPS25762-Q1
							2:3	No connection
9	I2C1:SCL1 or VIN/2	J11	1:2	Observe input voltage scaled to 50% to fit input range of the digitizer	VIN_FILT/2	Observe Vin input filter voltage scaled to 50% to fit input range of the digitizer		
			2:3	Observe I2C_SCL1				
10	I2C_SDA1 or GPIO_9	J12	1:2	Observe I2C_SDA1	GPIO_9	Observe GPIO_9		
			2:3	Observe GPIO_9				

2.4 Jumper Information

J13 TVSP Jumper

This jumper selects the bootmode and I2C address for the TPS25762-Q1.

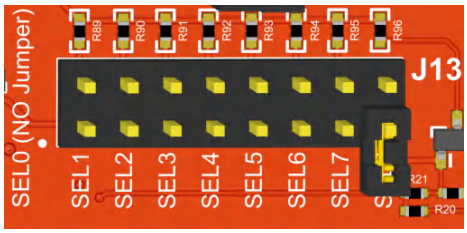

Figure 2-4. J13 TVSP Jumper

See TPS25762-Q1 Automotive USB Type-C® Power Delivery Controller with Buck-Boost Regulator datasheet for more information.

Copyright © 2026 Texas Instruments Incorporated

J21 Power Supply Control

This jumper is used to disable or select power supplies for the board.

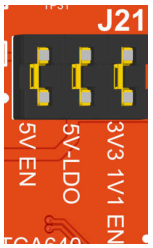

Figure 2-5. J21 Power Supply Control

Table 2-4. Power Supply Control

Pins	Label	Description
1-2	5V EN	Enable buck regulator to generate VCC5V
3-4	5V-LDO	Connect LDO_5V to VCC5V
5-6	3V3 1V1EN	Enable the LDO to generate VCC3V3 and VCC1V1 for Hub and MCU

J10I2C Connection Jumper

This jumper block expands the I2C1 connections of TPS25762-Q1 and can connect to GPIO expander, I2C temperature sensor, and EEPROM. Since I2C bus can support multiple targets, TI recommends to connect all pins.

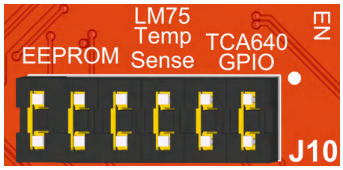

Figure 2-6. J10I2C Connection Jumper

Table 2-5. J10I2C Connection Jumper

Pins	Label	Description
1-2 and 3-4	TCA640 GPIO	Connect the I2C1 bus of the TPS25762-Q1 to the TCA640 GPIO expander
4-5 and 7-8	LM75 Temp Sense	Connect the I2C1 bus of the TPS25762-Q1 to LM75 temperature sensor
9-10 and 10-11	EEPROM	Connect the I2C1 bus of the TPS25762-Q1 to the TCA640 EEPROM

J3 NTC Selection Jumper

The J3 header is used to verify the thermal foldback function. The NTC pin detects the voltage of external NTC circuit and can be connected to thermistor (NTC or PTC) divider or NTC_VAR. NTC_VAR is the output of TPL0102, which is a I2C digital potentiometer. The divider footprints allow the use of either PTC or NTC resistors to match what is used in the system represented. This combinations are used to test the thermal foldback function. The thermistor assembled on the EVM is positive temperature coefficient (PTC).

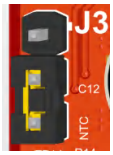

Figure 2-7. J3 NTC Selection Jumper

Copyright © 2026 Texas Instruments Incorporated

Table 2-6. J3 NTC Selection Jumper

Pins	Label	Description
1-2	NTC	Connect NTC resistor to TPS25762-Q1 NTC pin
2-3	NTC VAR	Connect the digital pot to the NTC pin

J8 TMP75B-Q1 Alert Connection Jumper

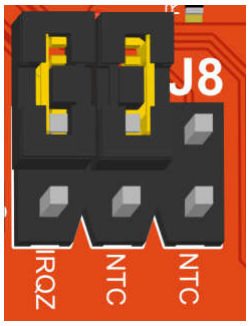

Figure 2-8. J8 TMP75B-Q1 Alert Connection Jumper

Table 2-7. J8 TMP75B-Q1 Alert Connection Jumper

Pins	Label	Description
1-2	IRQ	Connect the active low output of the TMP75B-Q1 pin to the IRQ pin (GPIO9 of the TPS25762-Q1)
3-4	NTC	Connect the active low output of the alert pin of the TMP75B-Q1 to the NTC pin of the TPS25762-Q1
5-6	NTC	Connect the inverted (active high) output of the alert pin of the TMP75B-Q1 to the NTC pin of the TPS25762-Q1

2.5 Push Buttons

The TPS25762-Q1 can be reset using the RESET momentary button.

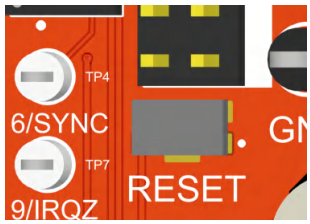

Figure 2-9. Reset Button

3 Software

3.1 Software Description

The TPS25762-Q1 device is configured using the TPS257XX-Q1-GUI. The TPS257XX-Q1-GUI Configuration Guide describes the features of the GUI and the process to program the resulting configuration into the EEPROM connected to the TPS25762-Q1. See the TPS257XX-Q1-GUI Configuration Guide for more information.

Copyright © 2026 Texas Instruments Incorporated

4 Hardware Design Files

4.1 Schematics

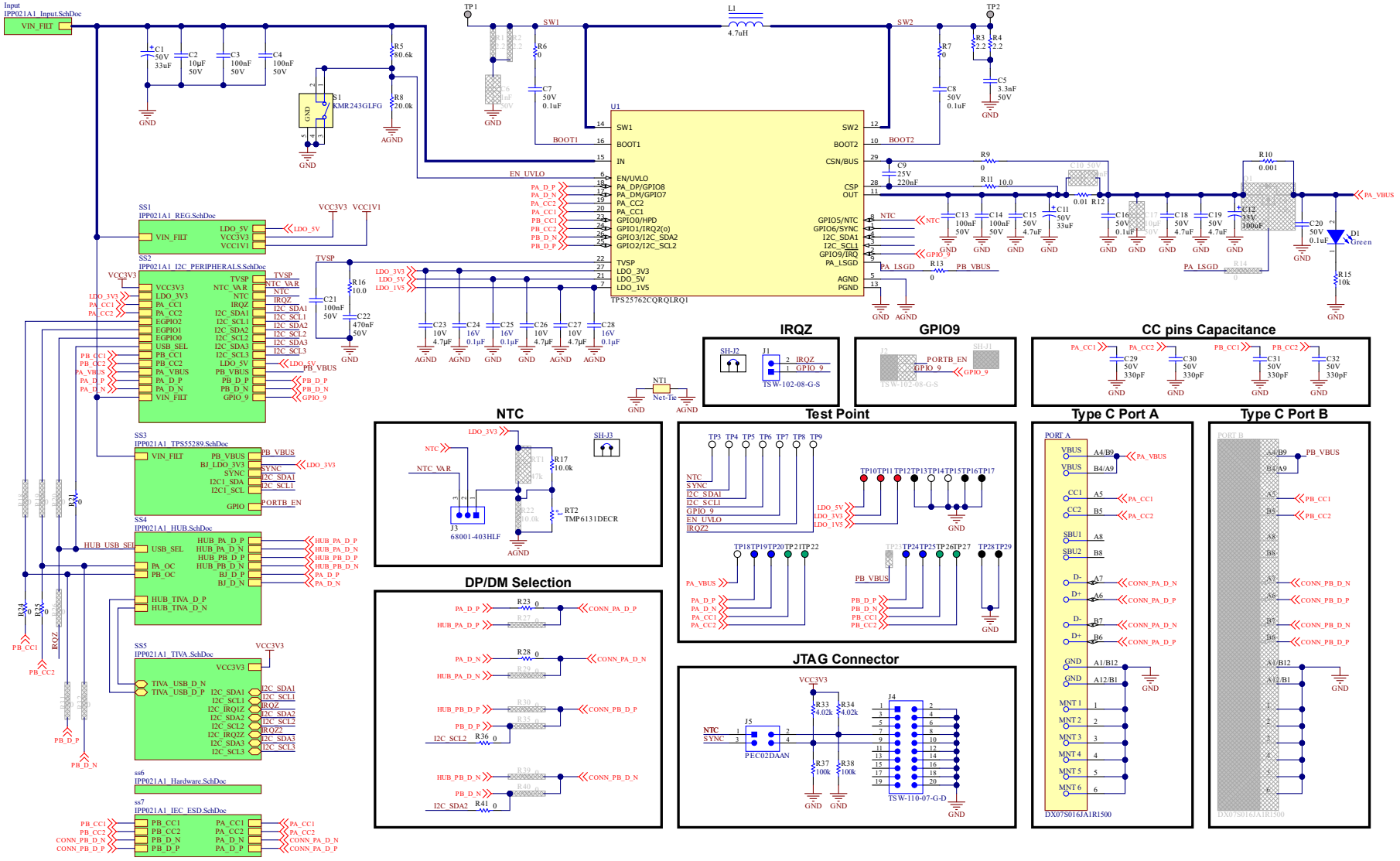

Figure 4-1. Top Level Schematic

Copyright © 2026 Texas Instruments Incorporated

Reverse Current, Reverse Connection, and EMC filter

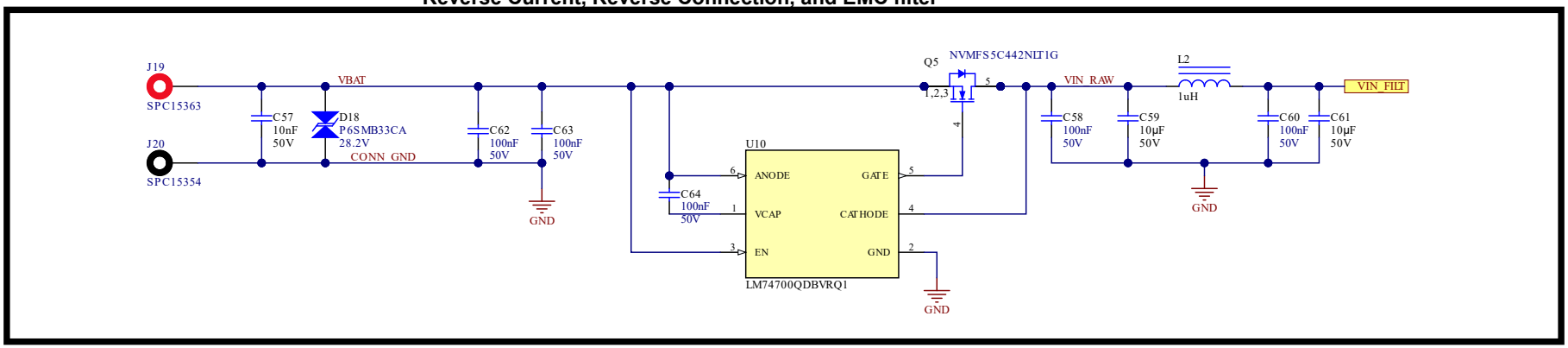

Figure 4-2. Input Filter

Copyright © 2026 Texas Instruments Incorporated

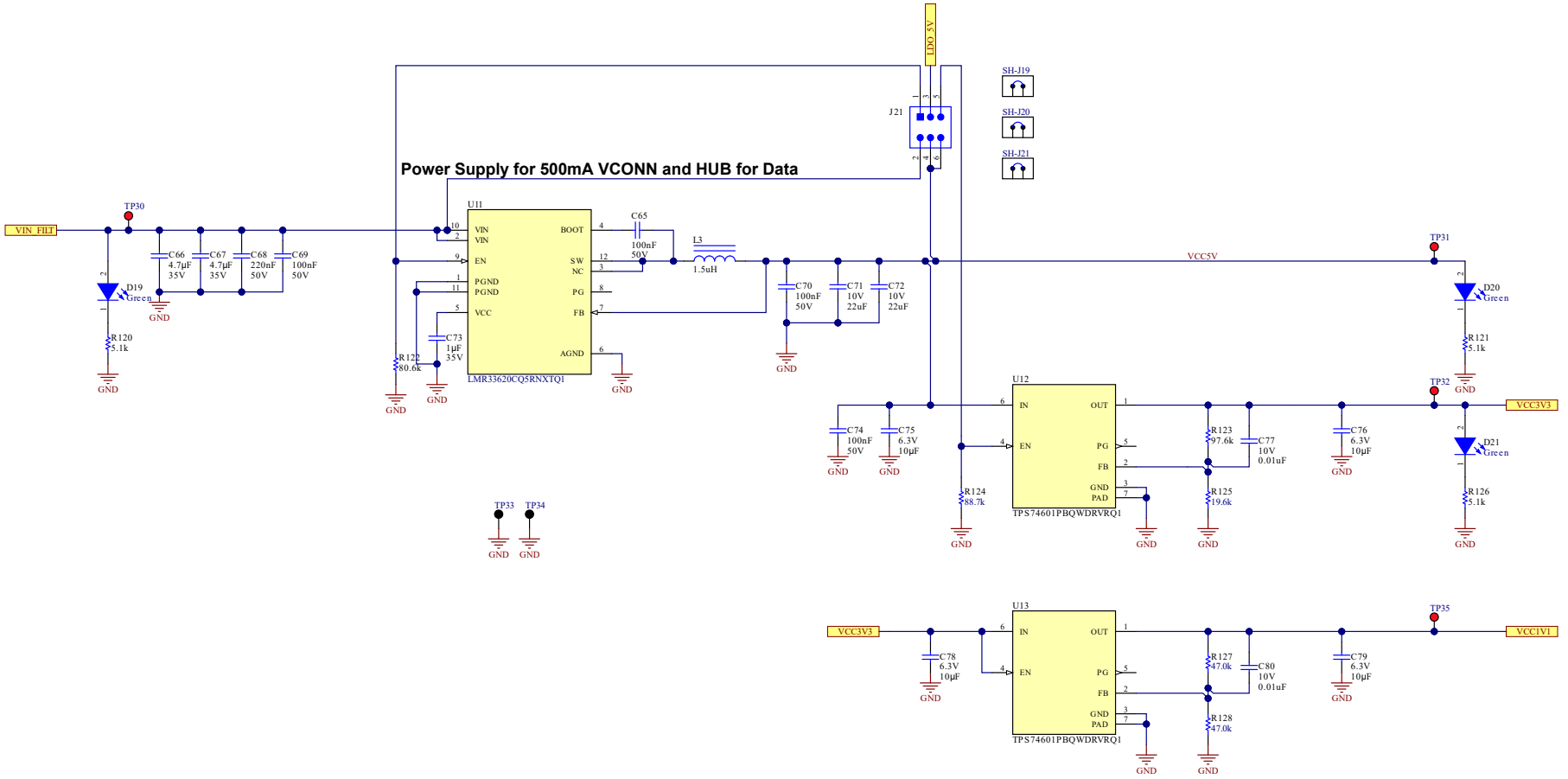

Figure 4-3. Power Regulators

Copyright © 2026 Texas Instruments Incorporated

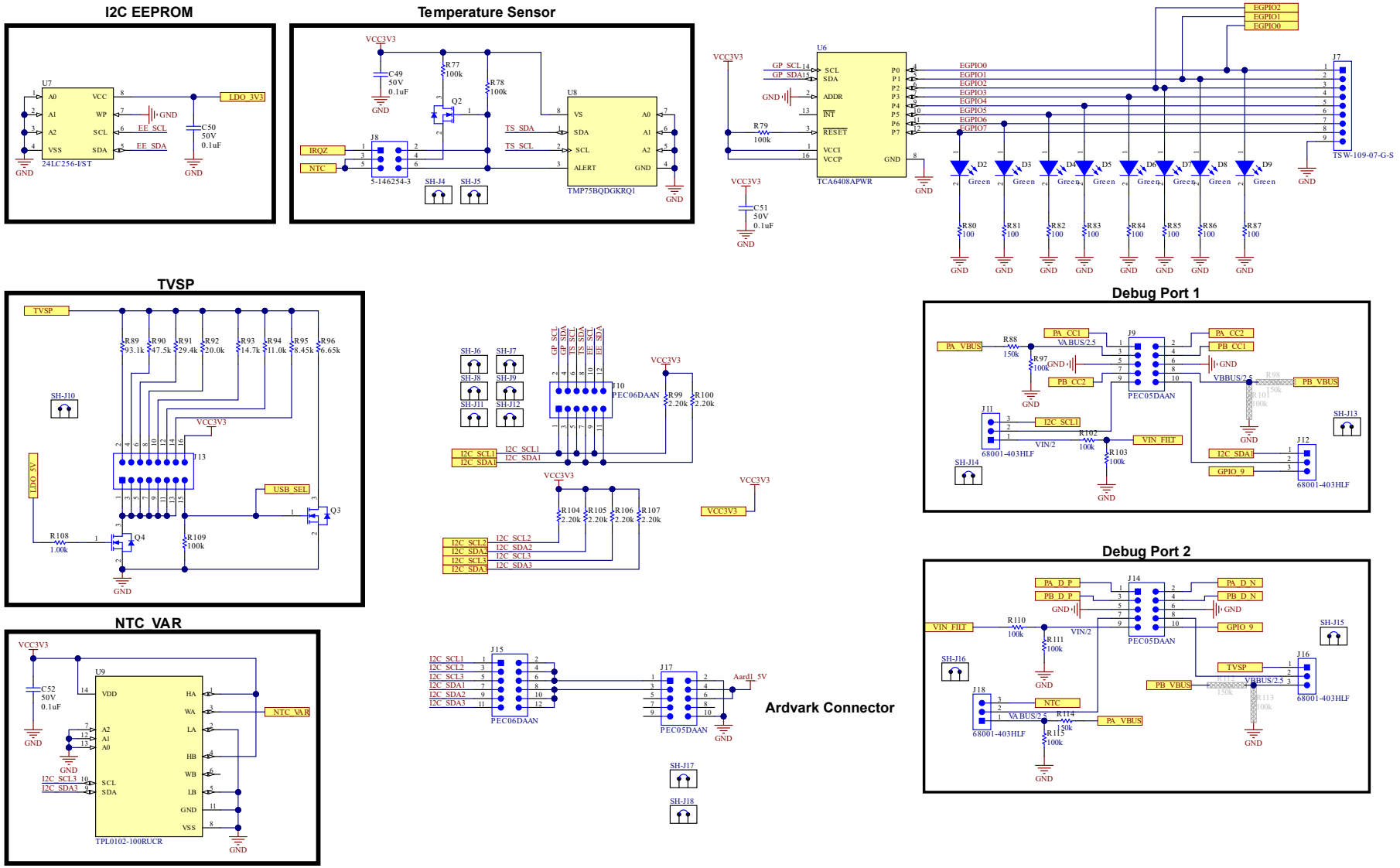

Figure 4-4. Device Support Peripherals

Copyright © 2026 Texas Instruments Incorporated

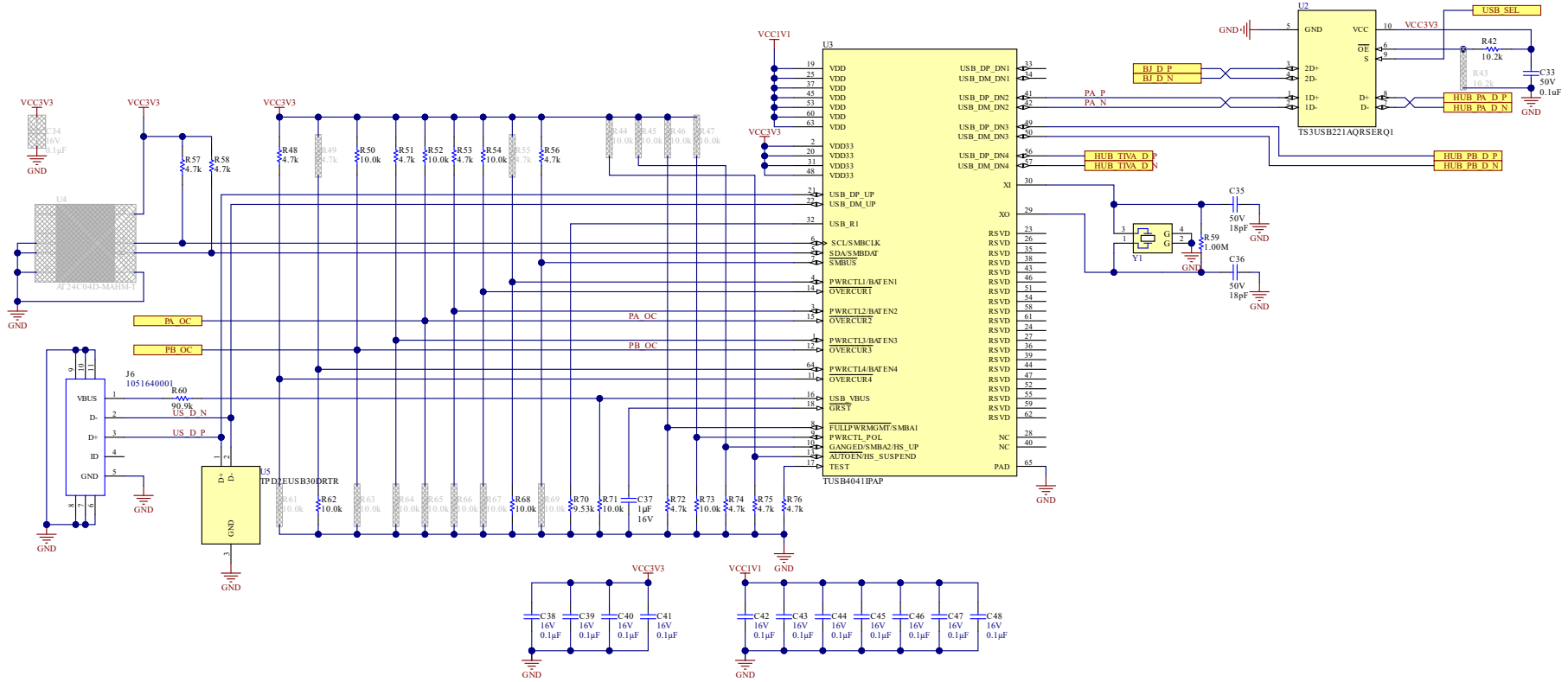

Figure 4-5. USB2.0 HUB

Copyright © 2026 Texas Instruments Incorporated

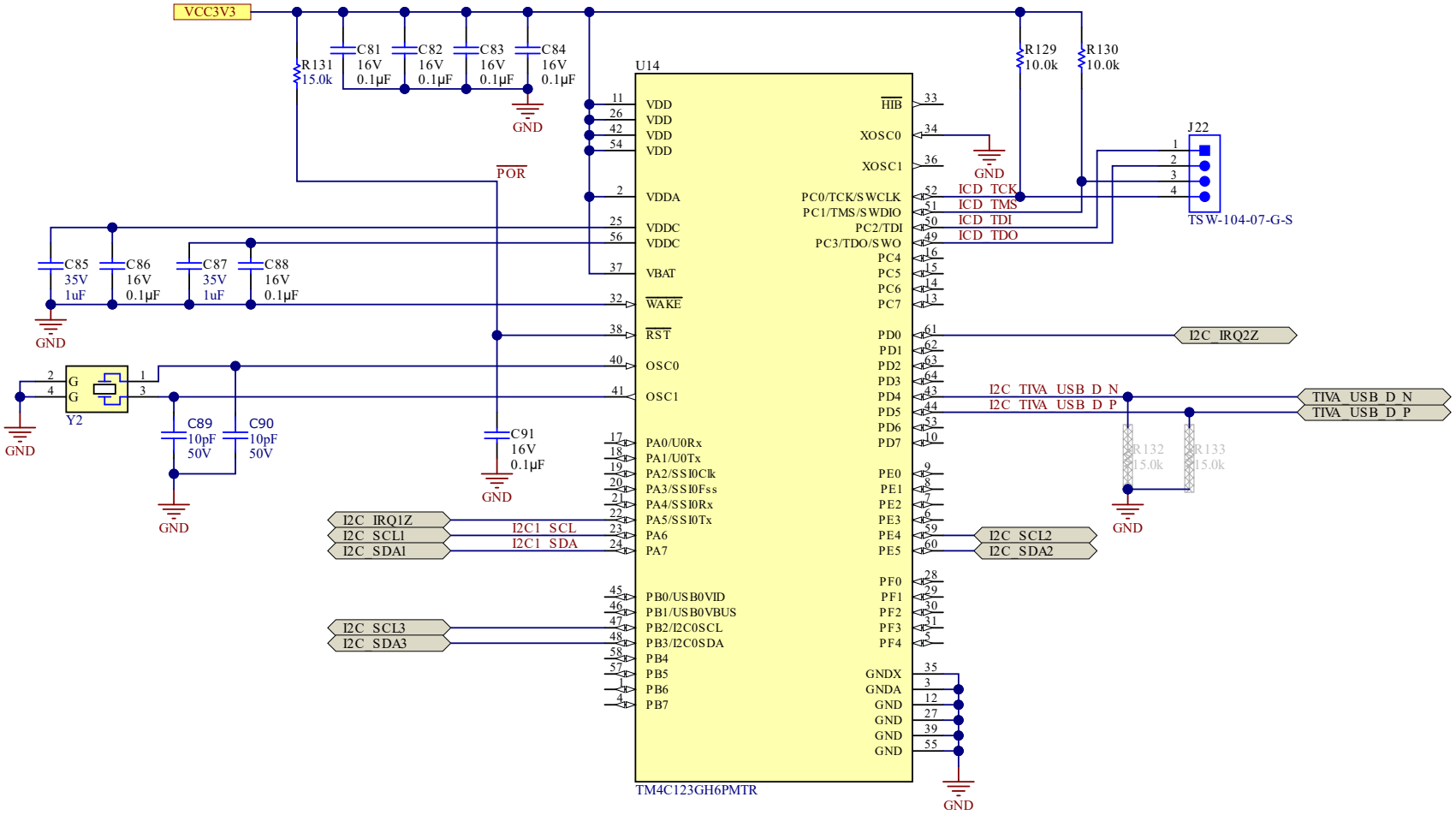

Figure 4-6. USB to I2C MCU

Copyright © 2026 Texas Instruments Incorporated

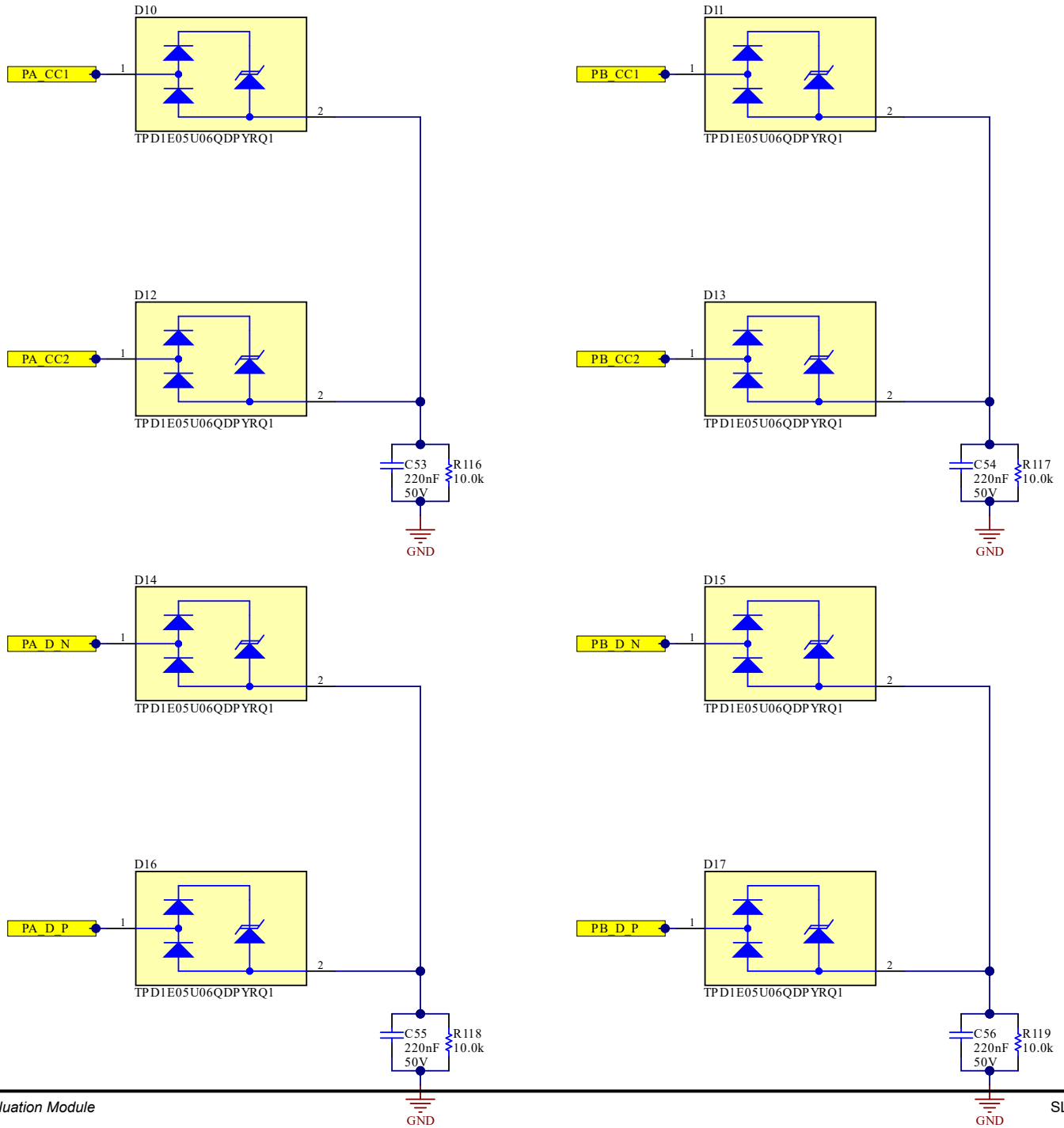

Copyright © 2026 Texas Instruments Incorporated

Figure 4-7. IEC ESD Devices

4.2 PCB Layouts

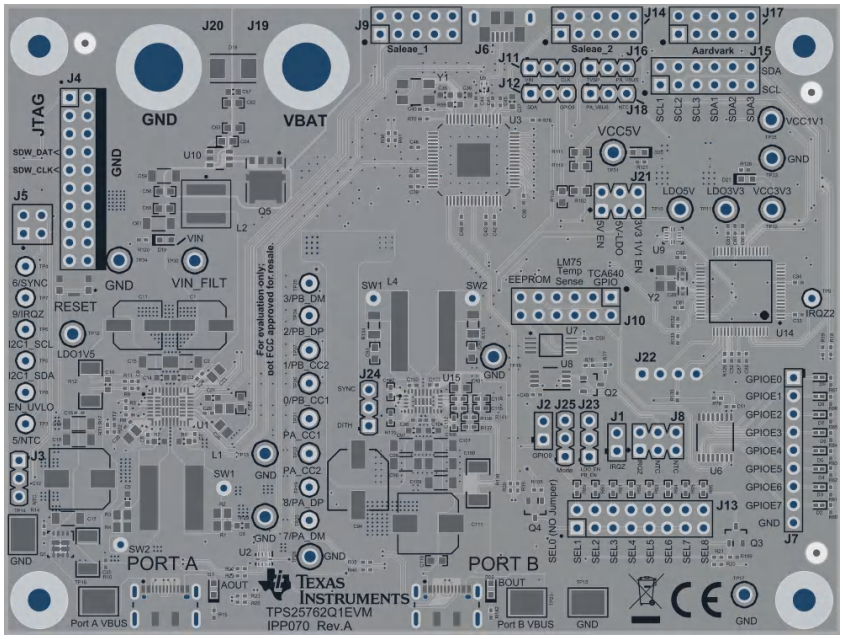

Figure 4-8. TPS25762Q1 EVM Top Composite

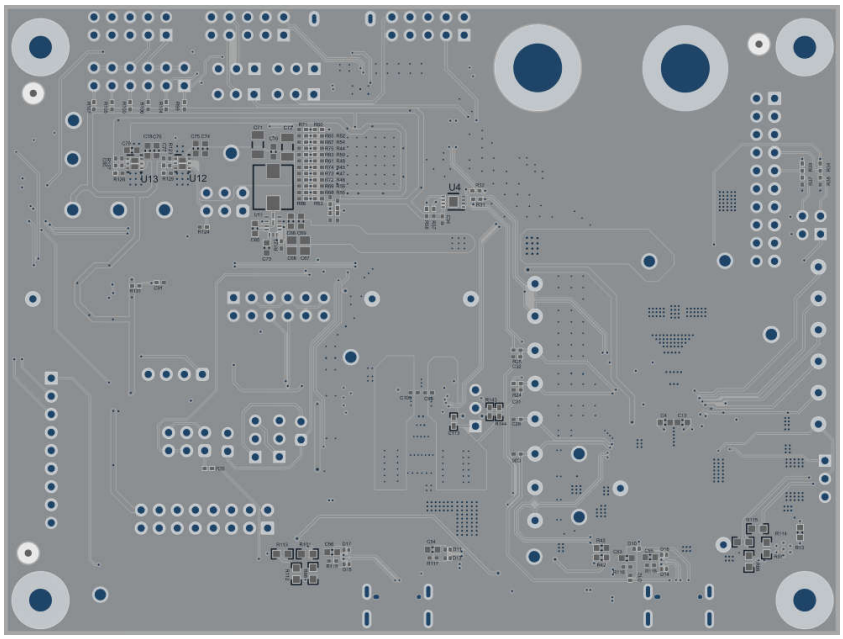

Figure 4-9. TPS25762Q1EVM Bottom Composite

Copyright © 2026 Texas Instruments Incorporated

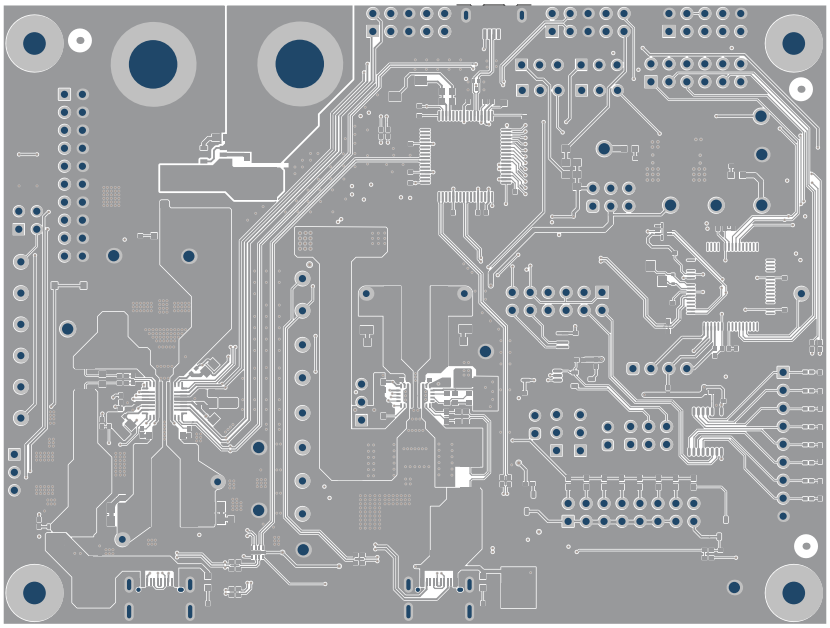

Figure 4-10. TPS25762Q1EVM Top Component (1)

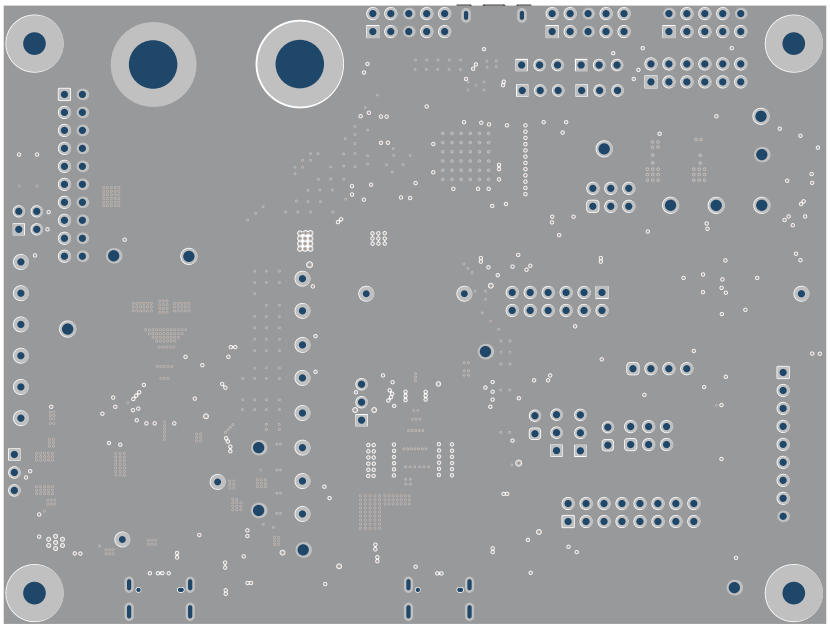

Figure 4-11. TPS25762Q1EVM Signal1 (2)

Copyright © 2026 Texas Instruments Incorporated

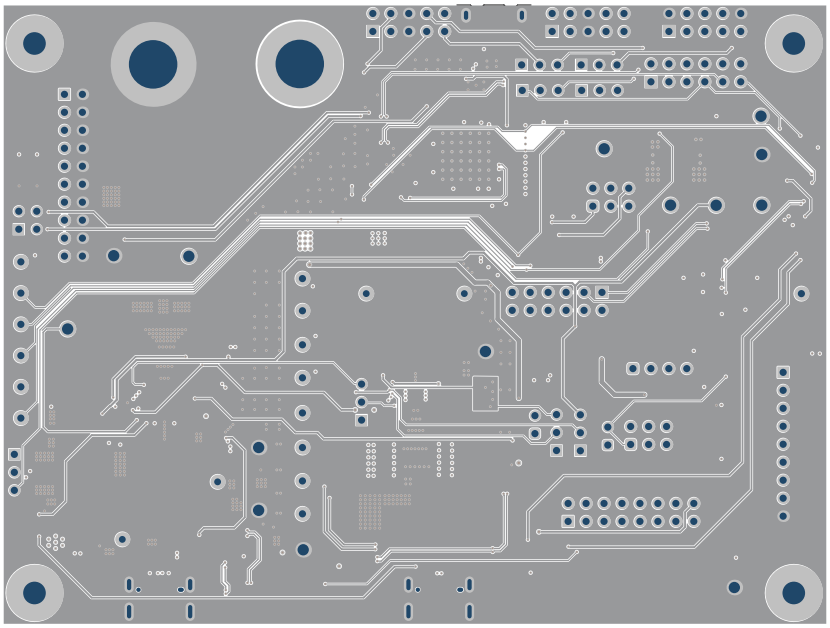

Figure 4-12. TPS25762Q1EVM Signal2 (3)

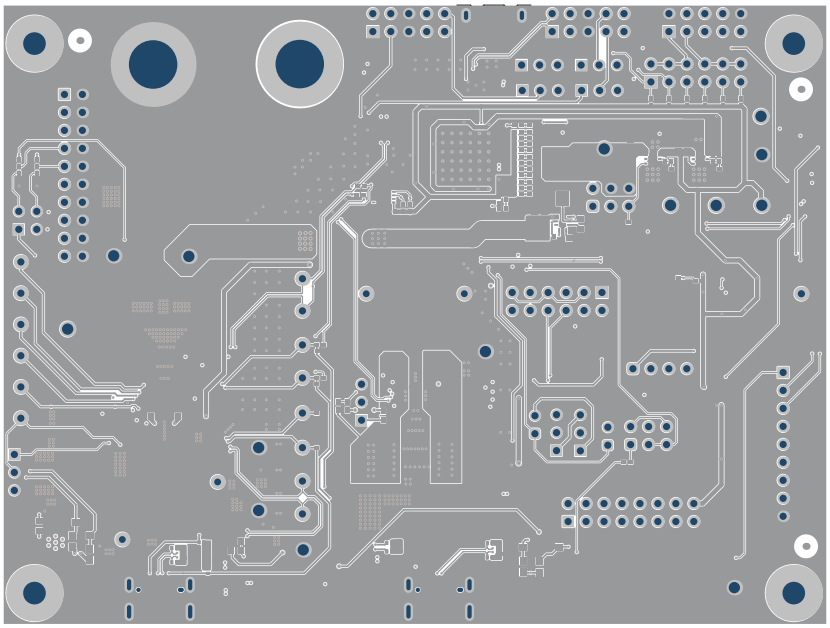

Figure 4-13. TPS25762Q1EVM Bottom Component (4)

Copyright © 2026 Texas Instruments Incorporated

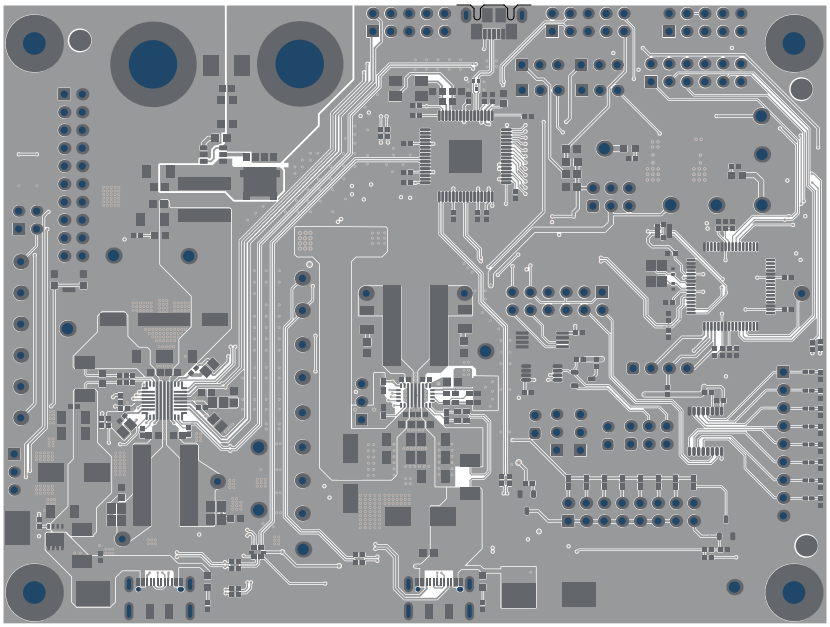

Figure 4-14. TPS25762Q1EVM Top Solder Mask

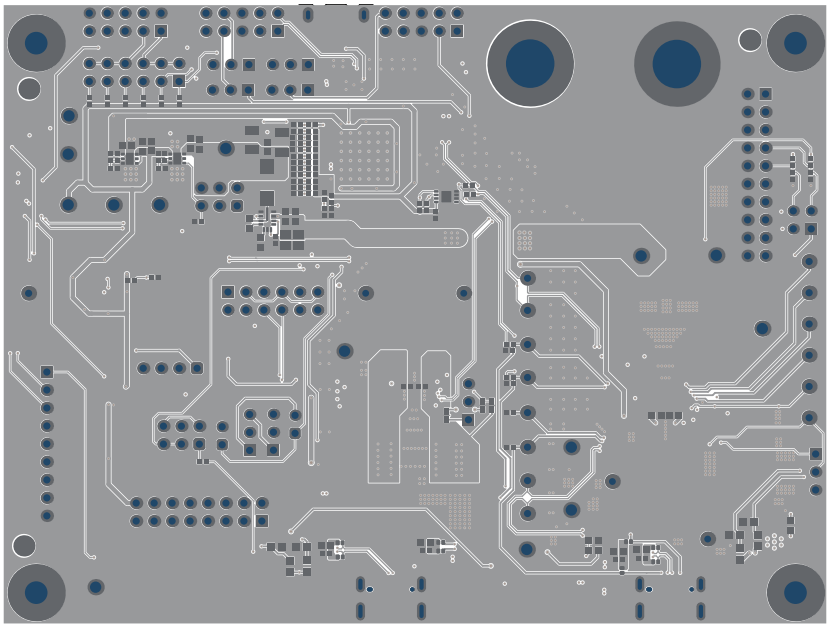

Figure 4-15. TPS25762Q1EVM Bottom Solder Mask

Copyright © 2026 Texas Instruments Incorporated

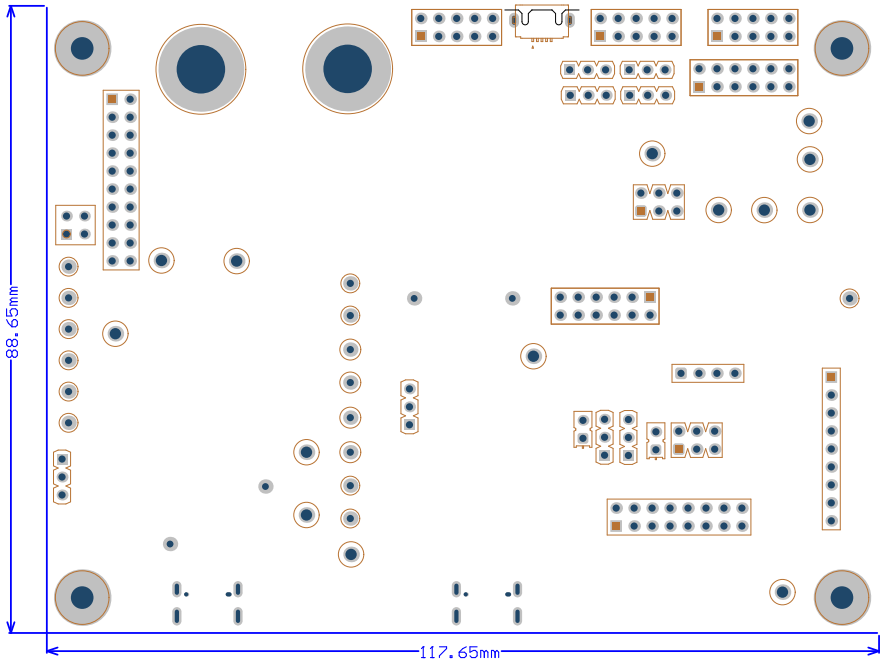

Figure 4-16. TPS25762Q1EVM Board Dimensions

Copyright © 2026 Texas Instruments Incorporated

4.3 Bill of Materials (BOM)

Table 4-1. Bill of Materials

Designator	Quantity	Value	Description	Package Reference	Part Number	Manufacturer
!PCB1	1		Printed Circuit Board		IPP021	Any
C1, C11	2	33uF	CAP, Polymer Hybrid, 33uF, 50V, +/- 20%, 40Ω, 6.3x7.7 SMD	6.3x7.7	EEH-ZA1H330XP	Panasonic
C2, C59, C61	3	10uF	CAP, CERM, 10µF, 50V,+/- 10%, X7R, AEC-Q200 Grade 1, 1206	1206	CGA5L1X7R1H106K160AC	TDK
C3, C4, C13, C14, C21, C65, C69, C70, C74	9	0.1uF	CAP, CERM, 0.1uF, 50V, +/- 10%, X7R, AEC-Q200 Grade 1, 0603	603	CGA3E2X7R1H104K080AA	TDK
C5	1	3300pF	CAP, CERM, 3300pF, 50V,+/- 10%, X7R, 0603	603	8.85012E+11	Wurth Elektronik
C7, C8, C16, C20, C33, C49, C50, C51, C52	9	0.1uF	CAP, CERM, 0.1uF, 50V, +/- 10%, X7R, AEC-Q200 Grade 1, 0402	402	CGA2B3X7R1H104K050BB	TDK
C9	1	0.22uF	CAP, CERM, 0.22uF, 25V, +/- 20%, X5R, 0402	402	C1005X5R1E224M050BC	TDK
C12	1	100uF	CAP, Polymer Hybrid, 100uF, 35V, +/- 20%, 27mΩ, 8x10 SMD	8x10	EEH-ZC1V101P	Panasonic
C15, C18, C19	3	4.7uF	CAP, CERM, 4.7uF, 50V, +/- 10%, X7R, 1206	1206	C3216X7R1H475K160AC	TDK
C22	1	0.47uF	CAP, CERM, 0.47uF, 50V, +/- 10%, X7R, 0603	603	C1608X7R1H474K080AC	TDK
C23, C26, C27	3	4.7uF	CAP, CERM, 4.7µF, 10V,+/- 10%, X7R, AEC-Q200 Grade 1, 0805	805	CGA4J3X7R1A475K125AB	TDK
C24, C25, C28, C38, C39, C40, C41, C42, C43, C44, C45, C46, C47, C48, C81, C82, C83, C84, C86, C88, C91	21	0.1uF	CAP, CERM, 0.1µF, 16V,+/- 5%, X7R, AEC-Q200 Grade 1, 0402	402	GCM155R71C104JA55D	MuRata
C29, C30, C31, C32	4	330pF	CAP, CERM, 330pF, 50V, +/- 10%, X7R, 0402	402	GRM155R71H331KA01D	MuRata
C35, C36	2	18pF	CAP, CERM, 18pF, 50V, +/- 5%, C0G/NP0, 0603	603	GRM1885C1H180JA01D	MuRata
C37	1	1uF	CAP, CERM, 1µF, 16V,+/- 10%, X7R, AEC-Q200 Grade 1, 0603	603	EMK107B7105KAHT	Taiyo Yuden
C53, C54, C55, C56, C68	5	0.22uF	CAP, CERM, 0.22µF, 50V,+/- 10%, X7R, AEC-Q200 Grade 1, 0603	603	GCJ188R71H224KA01D	MuRata
C57	1	0.01uF	CAP, CERM, 0.01uF, 50V, +/- 10%, X7R, AEC-Q200 Grade 1, 0603	603	GCM188R71H103KA37D	MuRata
C58, C60, C62, C63, C64	5	0.1uF	CAP, CERM, 0.1µF, 50V,+/- 10%, X7R, AEC-Q200 Grade 1, 0603	603	C0603C104K5RACAUTO	Kemet
C66, C67	2	4.7uF	CAP, CERM, 4.7uF, 35V, +/- 10%, X7R, AEC-Q200 Grade 1, 0805	805	CGA4J1X7R1V475K125AC	TDK

Copyright © 2026 Texas Instruments Incorporated

Table 4-1. Bill of Materials (continued)

Designator	Quantity	Value	Description	Package Reference	Part Number	Manufacturer
C71, C72	2	22uF	CAP, CERM, 22uF, 10V, +/- 10%, X7R, AEC-Q200 Grade 1, 1206	1206	GCM31CR71A226KE02L	MuRata
C73	1	1uF	CAP, CERM, 1uF, 35V, +/- 10%, X7R, AEC-Q200 Grade 1, 0603	603	CGA3E1X7R1V105K080AC	TDK
C75, C76, C78, C79	4	10uF	CAP, CERM, 10µF, 6.3V,+/- 20%, X7R, 0603	603	CL10B106MQ8NRNC	Samsung Electro-Mechanics
C77, C80	2	0.01uF	CAP, CERM, 0.01uF, 10V, +/- 10%, X5R, 0402	402	GRM155R61A103KA01D	MuRata
C85, C87	2	1uF	CAP, CERM, 1uF, 35V, +/- 10%, X5R, 0402	402	C1005X5R1V105K050BC	TDK
C89, C90	2	10pF	Cap Ceramic 10pF 50V NP0 0.5pF Pad SMD 0402 +150°C Automotive T/R	402	CGA2B2NP01H100D050BA	TDK Corporation
D1, D19, D20, D21	4	Green	LED, Green, SMD	LED_0603	150060GS75000	Wurth Elektronik
D2, D3, D4, D5, D6, D7, D8, D9	8	Green	LED, Green, SMD	402	APHHS1005CGCK	Kingbright
D10, D11, D12, D13, D14, D15, D16, D17	8		Automotive 1-Channel Ultra-Low-Capacitance IEC ESD Protection Diode, DPY0002A (X1SON-2)	DPY0002A	TPD1E05U06QDPYRQ1	Texas Instruments
D18	1	28.2V	Diode, TVS, Bi, 22V, 35.5 Vc, AEC-Q101, SMC	SMB	P6SMB33CA	Littelfuse
H1, H2, H3, H4	4		Machine Screw, Round, #4-40x 1/4, Nylon, Philips panhead	Screw	NY PMS 440 0025 PH	B&F Fastener Supply
H5, H6, H7, H8	4		Standoff, Hex, 0.5"L #4-40 Nylon	Standoff	1902C	Keystone
J1	1		Header, 2.54mm, 2x1, Gold, TH	Header, 2.54mm, 2x1, TH	TSW-102-08G-S	Samtec
J3, J11, J12, J16, J18	5		Header, 2.54mm, 3x1, Tin, TH	Header, 2.54mm, 3x1, TH	68001-403HLF	FCI
J4	1		Header, 100mil, 10x2, Gold, TH	10x2 Header	TSW-110-07G-D	Samtec
J5	1		Header, 100mil, 2x2, Tin, TH	Header, 2x2, 2.54mm, TH	PEC02DAAN	Sullins Connector Solutions
J6	1		Receptacle, USB 2.0, Micro B, 5 Position, R/A, SMT	Receptacle, USB 2.0, Micro B, 5 Pos, 0.65mm Pitch, R/A, SMT	1051640001	Molex
J7	1		Header, 100mil, 9x1, Gold, TH	9x1 Header	TSW-109-07G-S	Samtec
J8, J21	2		Header, 100mil, 3x2, Tin, TH	Header, 100mil, 3x2, TH	5-146254-3	TE Connectivity
J9, J14, J17	3		Header, 100mil, 5x2, Tin, TH	Header, 5x2, 100mil, Tin	PEC05DAAN	Sullins Connector Solutions
J10, J15	2		Header, 100mil, 6x2, Tin, TH	Header, 6x2, 100mil, Tin	PEC06DAAN	Sullins Connector Solutions
J13	1		Header, 100mil, 8x2, Gold, TH	8x2 Header	TSW-108-07G-D	Samtec
J19	1		BANANA JACK, SOLDER LUG, RED, TH	Red Insulated Banana Jack	SPC15363	Tenma

Copyright © 2026 Texas Instruments Incorporated

Table 4-1. Bill of Materials (continued)

Designator	Quantity	Value	Description	Package Reference	Part Number	Manufacturer
J20	1		BANANA JACK, SOLDER LUG, BLACK, TH	Black Insulated Banana Jack	SPC15354	Tenma
J22	1		Header, 100mil, 4x1, Gold, TH	4x1 Header	TSW-104-07G-S	Samtec
L1	1	4.7uH	4.7µH Shielded Molded Inductor 27.9A 4.5mΩ Max Nonstandard	Inductor, 6.6x6.1x6.4mm	744393605047	Wurth Electronics
L2	1	1uH	1µH Shielded Molded Inductor 32.3A 2.5mΩ Max Nonstandard	Inductor, 11.3x10.0x10.0mm	744393465010	Wurth Electronics
L3	1	1.5uH	Inductor, Shielded, Ferrite, 1.5uH, 6A, 0.025Ω, SMD	Inductor, 5.7x2.8x5.2mm	SRP5030T-1R5M	Bourns
PORT A	1		CONN RCP USB2.0 TYP C 24P SMD RA	Receptacle, USB 2.0 Type C, R/A, SMT	DX07S016JA1R1500	JAE Electronics
Q2	1	60V	MOSFET, N-CH, 60V, 0.115A, AEC-Q101, SOT-23	SOT-23	2N7002Q-7F	Diodes Inc.
Q3, Q4	2	60V	MOSFET, N-CH, 60V, 0.24A, SOT-23	SOT-23	2N7002E-T1E3	Vishay-Siliconix
Q5	1	40V	MOSFET, N-CH, 40V, 27A, AEC-Q101, DFN5 5x6mm	DFN5 5x6mm	NVMFS5C442NLT1G	ON Semiconductor
R3, R4	2	2.2	RES, 2.2, 5%, 0.125W, AEC-Q200 Grade 0, 0805	805	ERJ-6GEYJ2R2V	Panasonic
R5, R122	2	80.6k	RES, 80.6k, 1%, 0.063W, AEC-Q200 Grade 0, 0402	402	CRCW040280K6FKED	Vishay-Dale
R6, R7, R13	3	0	RES, 0, 1%, 0.1W, AEC-Q200 Grade 0, 0603	603	RMCF0603ZT0R00	Stackpole Electronics Inc
R8	1	20.0k	RES, 20.0k, 1%, 0.063W, AEC-Q200 Grade 0, 0402	402	CRCW040220K0FKED	Vishay-Dale
R9, R21, R23, R24, R25, R28, R36, R41	8	0	RES, 0, 5%, 0.063W, AEC-Q200 Grade 0, 0402	402	CRCW04020000Z0ED	Vishay-Dale
R10	1	0.001	RES, 0.001, 1%, 1W, 2010	2010	PMR50HZPFV1L00	Rohm
R11	1	10	RES, 10.0, 1%, 0.063W, 0402	402	CRCW040210R0FKED	Vishay-Dale
R12	1	0.01	RES, 0.01, 1%, 1W, 2010	2010	WSL2010R0100FEA18	Vishay-Dale
R15	1	10k	RES, 10k, 5%, 0.1W, AEC-Q200 Grade 0, 0402	402	ERJ-2GEJ103X	Panasonic
R16	1	10	RES, 10.0, 1%, 0.25W, 0805	805	RNCP0805FTD10R0	Stackpole Electronics Inc
R17, R50, R52, R54, R62, R68, R71, R73, R116, R117, R118, R119, R129, R130	14	10.0k	RES, 10.0k, 1%, 0.063W, AEC-Q200 Grade 0, 0402	402	AC0402FR-0710KL	Yageo America
R33, R34	2	4.02k	RES, 4.02k, 1%, 0.063W, AEC-Q200 Grade 0, 0402	402	CRCW04024K02FKED	Vishay-Dale
R37, R38, R77, R78, R79, R109	6	100k	RES, 100k, 1%, 0.0625W, AEC-Q200 Grade 0, 0402	402	AC0402FR-07100KL	Yageo America

Copyright © 2026 Texas Instruments Incorporated

Table 4-1. Bill of Materials (continued)

Designator	Quantity	Value	Description	Package Reference	Part Number	Manufacturer
R42	1	10.2k	RES, 10.2k, 1%, 0.1W, 0603	603	RC0603FR-0710K2L	Yageo
R48, R51, R53, R56, R57, R58, R72, R74, R75, R76	10	4.7k	RES, 4.7k, 5%, 0.063W, AEC-Q200 Grade 0, 0402	402	CRCW04024K70JNED	Vishay-Dale
R59	1	1.00Meg	RES, 1.00M, 1%, 0.1W, AEC-Q200 Grade 0, 0603	603	CRCW06031M00FKEA	Vishay-Dale
R60	1	90.9k	RES, 90.9k, 1%, 0.063W, AEC-Q200 Grade 0, 0402	402	CRCW040290K9FKED	Vishay-Dale
R70	1	9.53k	RES, 9.53k, 1%, 0.063W, AEC-Q200 Grade 0, 0402	402	CRCW04029K53FKED	Vishay-Dale
R80, R81, R82, R83, R84, R85, R86, R87	8	100	RES, 100, 1%, 0.063W, 0402	402	MCR01MZPF1000	Rohm
R88, R114	2	150k	RES, 150k, 1%, 0.1W, AEC-Q200 Grade 0, 0603	603	CRCW0603150KFKEA	Vishay-Dale
R89	1	93.1k	RES, 93.1k, 1%, 0.063W, AEC-Q200 Grade 0, 0402	402	CRCW040293K1FKED	Vishay-Dale
R90	1	47.5k	RES, 47.5k, 1%, 0.063W, AEC-Q200 Grade 0, 0402	402	CRCW040247K5FKED	Vishay-Dale
R91	1	29.4k	RES, 29.4k, 1%, 0.063W, 0402	402	CRCW040229K4FKED	Vishay-Dale
R92	1	20.0k	RES, 20.0k, 1%, 0.063W, 0402	402	CRCW040220K0FKED	Vishay-Dale
R93	1	14.7k	RES, 14.7k, 1%, 0.063W, AEC-Q200 Grade 0, 0402	402	CRCW040214K7FKED	Vishay-Dale
R94	1	11.0k	RES, 11.0k, 1%, 0.063W, 0402	402	CRCW040211K0FKED	Vishay-Dale
R95	1	8.45k	RES, 8.45k, 1%, 0.063W, AEC-Q200 Grade 0, 0402	402	CRCW04028K45FKED	Vishay-Dale
R96	1	6.65k	RES, 6.65k, 1%, 0.063W, 0402	402	CRCW04026K65FKED	Vishay-Dale
R97, R102, R103, R110, R111, R115	6	100k	RES, 100k, 0.1%, 0.1W, AEC-Q200 Grade 1, 0603	603	TNPW0603100KBEEA	Vishay-Dale
R99, R100, R104, R105, R106, R107	6	2.20k	RES, 2.20k, 1%, 0.063W, AEC-Q200 Grade 0, 0402	402	RMCF0402FT2K20	Stackpole Electronics Inc
R108	1	1.00k	RES, 1.00k, 1%, 0.063W, 0402	402	MCR01MZPF1001	Rohm
R120, R121, R126	3	5.1k	RES, 5.1k, 5%, 0.063W, AEC-Q200 Grade 0, 0402	402	CRCW04025K10JNED	Vishay-Dale
R123	1	97.6k	RES, 97.6k, 1%, 0.063W, AEC-Q200 Grade 0, 0402	402	CRCW040297K6FKED	Vishay-Dale
R124	1	88.7k	RES, 88.7k, 1%, 0.063W, AEC-Q200 Grade 0, 0402	402	CRCW040288K7FKED	Vishay-Dale
R125	1	19.6k	RES, 19.6k, 1%, 0.063W, AEC-Q200 Grade 0, 0402	402	CRCW040219K6FKED	Vishay-Dale

Copyright © 2026 Texas Instruments Incorporated

Table 4-1. Bill of Materials (continued)

Designator	Quantity	Value	Description	Package Reference	Part Number	Manufacturer
R127, R128	2	47.0k	RES, 47.0k, 1%, 0.0625W, 0402	402	RC0402FR-0747KL	Yageo America
R131	1	15.0k	RES, 15.0k, 1%, 0.063W, AEC-Q200 Grade 0, 0402	402	CRCW040215K0FKED	Vishay-Dale
RT2	1		Thermistor, DEC0002A (X1SON-2)	DEC0002A	TMP6131DECR	Texas Instruments
S1	1		Switch, SPST-NO, Off-Mom, 0.01A, 32VDC, SMD	4.2x2.8mm	KMR243GLFG	C&K Components
SH-J2, SH-J3, SH-J4, SH-J5, SH-J6, SH-J7, SH-J8, SH-J9, SH-J10, SH-J11, SH-J12, SH-J13, SH-J14, SH-J15, SH-J16, SH-J17, SH-J18, SH-J19, SH-J20, SH-J21	20	1x2	Shunt, 100mil, Gold plated, Black	Shunt	SNT-100-BK-G	Samtec
TP3, TP4, TP5, TP6, TP7, TP8, TP9	7		Test Point, Miniature, White, TH	White Miniature Test point	5002	Keystone
TP10, TP11, TP12, TP30, TP31, TP32, TP35	7		Test Point, Compact, Red, TH	Red Compact Test point	5005	Keystone
TP13, TP16, TP17, TP28, TP29, TP33, TP34	7		Test Point, Compact, Black, TH	Black Compact Test point	5006	Keystone
TP14, TP15, TP18	3		Test Point, Compact, SMT	Test point_Keystone_Compact	5016	Keystone
TP19, TP20, TP24, TP25	4		Test Point, Miniature, Blue, TH	Blue Miniature Test point	5117	Keystone
TP21, TP22, TP26, TP27	4		Test Point, Miniature, Green, TH	Green Miniature Test point	5116	Keystone
U1	1		Automotive Dual USB Type-C Power Delivery Controller with Buck-Boost Regulator	VQFN-HR29	TPS25762FQRQLRQ1	Texas Instruments
U2	1		Automotive Catalog ESD Protected, High-Speed USB 2.0 (480Mbps) 1:2 Multiplexer / Demultiplexer Switch, 16Ω RON, 2.5 to 3.3V, -40 to 125 degC, 10-Pin UQFN (RSE), Green (RoHS & no Sb/Br)	RSE0010A	TS3USB221AQRSERQ1	Texas Instruments
U3	1		Four-Port High-Speed 480Mbps USB 2.0 Hub, PAP0064K (HTQFP-64)	PAP0064K	TUSB4041IPAP	Texas Instruments
U5	1		ESD Solution for Super-Speed (6Gbps) USB 3.0 Interface, 2 Channels, -40 to +85°C, 3-pin SOT (DRT), Green (Rohs & No Sb/Br)	DRT0003A	TPD2EUSB30DRTR	Texas Instruments

Copyright © 2026 Texas Instruments Incorporated

Table 4-1. Bill of Materials (continued)

Designator	Quantity	Value	Description	Package Reference	Part Number	Manufacturer
U6	1		Low-Voltage 8-Bit I2C and SMBus I/O Expander, 1.65 to 5.5V, -40 to 85°C, 16-pin TSSOP (PW), Green (RoHS & no Sb/Br)	PW0016A	TCA6408APWR	Texas Instruments
U7	1		256K I2C CMOS Serial EEPROM, TSSOP-8	TSSOP-8	24LC256I/ST	Microchip
U8	1		Automotive Grade, 1.4V-Capable Temperature Sensor with I2C/SMBus Interface in LM75 Pinout, DGK0008A (VSSOP-8)	DGK0008A	TMP75BQDGKRQ1	Texas Instruments
U9	1		256-Taps Dual-Channel Digital Potentiometer With I2C Interface and Nonvolatile Memory, RUC0014A (X2QFN-14)	RUC0014A	TPL0102-100RUCR	Texas Instruments
U10	1		Low Iq Always ON Smart Diode Controller, DBV0006A (SOT-23-6)	DBV0006A	LM74700QDBVRQ1	Texas Instruments
U11	1		Automotive 3.8V to 36V 2A Synchronous Step-Down Voltage Regulator, RNX0012B (VQFN-HR-12)	RNX0012B	LMR33620CQ5RNXTQ1	Texas Instruments
U12, U13	2		1A LDO With Power-Good, DRV0006A (WSON-6)	DRV0006A	TPS74601PBQWDRVRQ1	Texas Instruments
U14	1		TIVA C Series Microcontroller, 256KB Flash, 32KB SRAM, 12 Bit, 12 Channels, -40 to 105 °C, 64-Pin LQFP (PM), Green (RoHS & no Sb/Br), Tape and Reel	PM0064A	TM4C123GH6PMTR	Texas Instruments
Y1	1		Crystal, 24MHz, 30ppm, 20pF, SMD	5x3.2mm	ECS-240-20-30B-AEN-TR	ECS Inc.
Y2	1		Crystal, 16MHz, 8pF, SMD	3.2x0.75x2.5mm	NX3225GA-16.000M-STD-CRG-1	NDK
C6	0	1000pF	CAP, CERM, 1000pF, 50V, +/- 10%, X7R, 0603	603	GRM188R71H102KA01D	MuRata
C10	0	0.1uF	CAP, CERM, 0.1uF, 50V, +/- 10%, X7R, AEC-Q200 Grade 1, 0603	603	CGA3E2X7R1H104K080AA	TDK
C17, C95, C96, C107, C108, C109	0	10uF	CAP, CERM, 10µF, 50V,+/- 10%, X7R, AEC-Q200 Grade 1, 1206	1206	CGA5L1X7R1H106K160AC	TDK
C34	0	0.1uF	CAP, CERM, 0.1µF, 16V,+/- 5%, X7R, AEC-Q200 Grade 1, 0402	402	GCM155R71C104JA55D	MuRata
C92, C93	0	2200pF	CAP, CERM, 2200pF, 50V, +/- 10%, X7R, 0603	603	GRM188R71H222KA01D	MuRata
C94	0	68uF	CAP, Aluminum Polymer, 68µF, 50V,+/- 20%, 0.03Ω, AEC-Q200 Grade 2, D8xL10.2mm SMD	D8xL10.2mm	EEH-ZA1H680P	Panasonic
C97, C106, C110	0	1uF	CAP, CERM, 1µF, 50V,+/- 20%, X5R, AEC-Q200 Grade 3, 0603	603	GRT188R61H105ME13D	MuRata
C98, C99	0	0.1uF	CAP, CERM, 0.1uF, 50V, +/- 20%, X7R, 0402	402	GRM155R71H104ME14D	MuRata

Copyright © 2026 Texas Instruments Incorporated

Table 4-1. Bill of Materials (continued)

Designator	Quantity	Value	Description	Package Reference	Part Number	Manufacturer
C100, C102, C103, C104, C105, C112	0	0.1uF	CAP, CERM, 0.1uF, 50V, +/- 10%, X7R, AEC-Q200 Grade 1, 0402	402	CGA2B3X7R1H104K050BB	TDK
C101	0	4.7uF	CAP, CERM, 4.7µF, 16V,+/- 10%, X5R, AEC-Q200 Grade 3, 0603	603	GRT188R61C475KE13D	MuRata
C111	0	100uF	CAP, Polymer Hybrid, 100uF, 35V, +/- 20%, 27mΩ, 8x10 SMD	8x10	EEH-ZC1V101P	Panasonic
C113	0	0.01uF	CAP, CERM, 0.01uF, 50V, +/- 10%, X7R, AEC-Q200 Grade 1, 0402	402	CGA2B3X7R1H103K050BB	TDK
C114	0	100pF	CAP, CERM, 100pF, 50V, +/- 5%, C0G/NP0, AEC-Q200 Grade 1, 0402	402	CGA2B2C0G1H101J050BA	TDK
C115	0	4700pF	CAP, CERM, 4700pF, 50V, +/- 10%, X7R, AEC-Q200 Grade 1, 0402	402	CGA2B2X7R1H472K050BA	TDK
D22	0	Green	LED, Green, SMD	LED_0603	150060GS75000	Wurth Elektronik
J2	0		Header, 2.54mm, 2x1, Gold, TH	Header, 2.54mm, 2x1, TH	TSW-102-08G-S	Samtec
J23, J24, J25	0		Header, 2.54mm, 3x1, Tin, TH	Header, 2.54mm, 3x1, TH	68001-403HLF	FCI
L4	0	4.7uH	Inductor, Shielded, Composite, 4.7uH, 24A, 0.01Ω, SMD	Inductor, 11.3x10x10mm	XAL1010-472MEB	Coilcraft
PORT B	0		CONN RCP USB2.0 TYP C 24P SMD RA	Receptacle, USB 2.0 Type C, R/A, SMT	DX07S016JA1R1500	JAE Electronics
Q1	0	30V	MOSFET, N-CH, 30V, 60A, DQG0008A (VSON-CLIP-8)	DQG0008A	CSD17575Q3	Texas Instruments
R1, R2	0	2.2	RES, 2.2, 5%, 0.125W, AEC-Q200 Grade 0, 0805	805	ERJ-6GEYJ2R2V	Panasonic
R14	0	0	RES, 0, 5%, 0.063W, 0402	402	RC0402JR-070RL	Yageo America
R18, R19, R20, R26, R27, R29, R30, R31, R32, R35, R39, R40	0	0	RES, 0, 5%, 0.063W, AEC-Q200 Grade 0, 0402	402	CRCW04020000Z0ED	Vishay-Dale
R22, R44, R45, R46, R47, R61, R63, R64, R65, R66, R67, R69	0	10.0k	RES, 10.0k, 1%, 0.063W, AEC-Q200 Grade 0, 0402	402	AC0402FR-0710KL	Yageo America
R43	0	10.2k	RES, 10.2k, 1%, 0.1W, 0603	603	RC0603FR-0710K2L	Yageo
R49, R55	0	4.7k	RES, 4.7k, 5%, 0.063W, AEC-Q200 Grade 0, 0402	402	CRCW04024K70JNED	Vishay-Dale
R98, R112	0	150k	RES, 150k, 1%, 0.1W, AEC-Q200 Grade 0, 0603	603	CRCW0603150KFKEA	Vishay-Dale
R101, R113	0	100k	RES, 100k, 0.1%, 0.1W, AEC-Q200 Grade 1, 0603	603	TNPW0603100KBEEA	Vishay-Dale
R132, R133	0	15.0k	RES, 15.0k, 1%, 0.063W, AEC-Q200 Grade 0, 0402	402	CRCW040215K0FKED	Vishay-Dale

Copyright © 2026 Texas Instruments Incorporated

Table 4-1. Bill of Materials (continued)

Designator	Quantity	Value	Description	Package Reference	Part Number	Manufacturer
R134, R135	0	2.2	RES, 2.20, 1%, 0.25W, AEC-Q200 Grade 0, 1206	1206	ERJ-8RQF2R2V	Panasonic
R136	0	0.01	RES, 0.01, 1%, 1W, 2010	2010	WSL2010R0100FEA18	Vishay-Dale
R137, R138	0	10	RES, 10.0, 1%, 0.063W, AEC-Q200 Grade 0, 0402	402	CRCW040210R0FKED	Vishay-Dale
R139	0	49.9k	RES, 49.9k, 1%, 0.063W, AEC-Q200 Grade 0, 0402	402	CRCW040249K9FKED	Vishay-Dale
R140	0	150k	RES, 150k, 1%, 0.063W, AEC-Q200 Grade 0, 0402	402	CRCW0402150KFKED	Vishay-Dale
R141	0	27.4k	RES, 27.4k, 1%, 0.063W, AEC-Q200 Grade 0, 0402	402	CRCW040227K4FKED	Vishay-Dale
R142	0	10k	RES, 10k, 5%, 0.1W, AEC-Q200 Grade 0, 0402	402	ERJ-2GEJ103X	Panasonic
R143	0	115k	RES, 115k, 1%, 0.063W, AEC-Q200 Grade 0, 0402	402	CRCW0402115KFKED	Vishay-Dale
R144	0	147k	RES, 147k, 1%, 0.063W, AEC-Q200 Grade 0, 0402	402	CRCW0402147KFKED	Vishay-Dale
RT1	0	47k	Thermistor NTC, 47kΩ, 5%, 0402	402	NCP15WL473J03RC	MuRata
SH-J1, SH-J22, SH-J23	0	1x2	Shunt, 100mil, Gold plated, Black	Shunt	SNT-100-BK-G	Samtec
TP23	0		Test Point, Compact, SMT	Test point_Keystone_Compact	5016	Keystone
U4	0		EEPROM 4KBIT 1MHZ,8UDFN	UDFN-8	AT24C04D-MAHM-T	Atmel
15	0		36V, 8A Buck-boost Converter with I2C Interface	VQFN21	TPS55289QWRYQRQ1	Texas Instruments

Copyright © 2026 Texas Instruments Incorporated

5 Additional Information

5.1 Trademarks

DisplayPort™ is a trademark of Video Electronics Standards Association .
USB Type-C® and USB-C® are registered trademarks of USB Implementers Forum.
All trademarks are the property of their respective owners.

Copyright © 2026 Texas Instruments Incorporated

STANDARD TERMS FOR EVALUATION MODULES

1. *Delivery:* TI delivers TI evaluation boards, kits, or modules, including any accompanying demonstration software, components, and/or documentation which may be provided together or separately (collectively, an “EVM” or “EVMs”) to the User (“User”) in accordance with the terms set forth herein. User's acceptance of the EVM is expressly subject to the following terms.

   1.1 EVMs are intended solely for product or software developers for use in a research and development setting to facilitate feasibility evaluation, experimentation, or scientific analysis of TI semiconductors products. EVMs have no direct function and are not finished products. EVMs shall not be directly or indirectly assembled as a part or subassembly in any finished product. For clarification, any software or software tools provided with the EVM (“Software”) shall not be subject to the terms and conditions set forth herein but rather shall be subject to the applicable terms that accompany such Software

   1.2 EVMs are not intended for consumer or household use. EVMs may not be sold, sublicensed, leased, rented, loaned, assigned, or otherwise distributed for commercial purposes by Users, in whole or in part, or used in any finished product or production system.

2 *Limited Warranty and Related Remedies/Disclaimers*:

   2.1 These terms do not apply to Software. The warranty, if any, for Software is covered in the applicable Software License Agreement.

   2.2 TI warrants that the TI EVM will conform to TI's published specifications for ninety (90) days after the date TI delivers such EVM to User. Notwithstanding the foregoing, TI shall not be liable for a nonconforming EVM if (a) the nonconformity was caused by neglect, misuse or mistreatment by an entity other than TI, including improper installation or testing, or for any EVMs that have been altered or modified in any way by an entity other than TI, (b) the nonconformity resulted from User's design, specifications or instructions for such EVMs or improper system design, or (c) User has not paid on time. Testing and other quality control techniques are used to the extent TI deems necessary. TI does not test all parameters of each EVM. User's claims against TI under this Section 2 are void if User fails to notify TI of any apparent defects in the EVMs within ten (10) business days after delivery, or of any hidden defects with ten (10) business days after the defect has been detected.

   2.3 TI's sole liability shall be at its option to repair or replace EVMs that fail to conform to the warranty set forth above, or credit User's account for such EVM. TI's liability under this warranty shall be limited to EVMs that are returned during the warranty period to the address designated by TI and that are determined by TI not to conform to such warranty. If TI elects to repair or replace such EVM, TI shall have a reasonable time to repair such EVM or provide replacements. Repaired EVMs shall be warranted for the remainder of the original warranty period. Replaced EVMs shall be warranted for a new full ninety (90) day warranty period.

WARNING

Evaluation Kits are intended solely for use by technically qualified, professional electronics experts who are familiar with the dangers and application risks associated with handling electrical mechanical components, systems, and subsystems.

User shall operate the Evaluation Kit within TI’s recommended guidelines and any applicable legal or environmental requirements as well as reasonable and customary safeguards. Failure to set up and/or operate the Evaluation Kit within TI’s recommended guidelines may result in personal injury or death or property damage. Proper set up entails following TI’s instructions for electrical ratings of interface circuits such as input, output and electrical loads.

NOTE:

EXPOSURE TO ELECTROSTATIC DISCHARGE (ESD) MAY CAUSE DEGREDATION OR FAILURE OF THE EVALUATION KIT; TI RECOMMENDS STORAGE OF THE EVALUATION KIT IN A PROTECTIVE ESD BAG.

3 *Regulatory Notices:*

3.1 *United States*

3.1.1 *Notice applicable to EVMs not FCC-Approved:*

FCC NOTICE: This kit is designed to allow product developers to evaluate electronic components, circuitry, or software associated with the kit to determine whether to incorporate such items in a finished product and software developers to write software applications for use with the end product. This kit is not a finished product and when assembled may not be resold or otherwise marketed unless all required FCC equipment authorizations are first obtained. Operation is subject to the condition that this product not cause harmful interference to licensed radio stations and that this product accept harmful interference. Unless the assembled kit is designed to operate under part 15, part 18 or part 95 of this chapter, the operator of the kit must operate under the authority of an FCC license holder or must secure an experimental authorization under part 5 of this chapter.

3.1.2 *For EVMs annotated as FCC – FEDERAL COMMUNICATIONS COMMISSION Part 15 Compliant:*

CAUTION

This device complies with part 15 of the FCC Rules. Operation is subject to the following two conditions: (1) This device may not cause harmful interference, and (2) this device must accept any interference received, including interference that may cause undesired operation.

Changes or modifications not expressly approved by the party responsible for compliance could void the user's authority to operate the equipment.

FCC Interference Statement for Class A EVM devices

NOTE: This equipment has been tested and found to comply with the limits for a Class A digital device, pursuant to part 15 of the FCC Rules. These limits are designed to provide reasonable protection against harmful interference when the equipment is operated in a commercial environment. This equipment generates, uses, and can radiate radio frequency energy and, if not installed and used in accordance with the instruction manual, may cause harmful interference to radio communications. Operation of this equipment in a residential area is likely to cause harmful interference in which case the user will be required to correct the interference at his own expense.

FCC Interference Statement for Class B EVM devices

NOTE: This equipment has been tested and found to comply with the limits for a Class B digital device, pursuant to part 15 of the FCC Rules. These limits are designed to provide reasonable protection against harmful interference in a residential installation. This equipment generates, uses and can radiate radio frequency energy and, if not installed and used in accordance with the instructions, may cause harmful interference to radio communications. However, there is no guarantee that interference will not occur in a particular installation. If this equipment does cause harmful interference to radio or television reception, which can be determined by turning the equipment off and on, the user is encouraged to try to correct the interference by one or more of the following measures:

- *Reorient or relocate the receiving antenna.*
- *Increase the separation between the equipment and receiver.*
- *Connect the equipment into an outlet on a circuit different from that to which the receiver is connected.*
- *Consult the dealer or an experienced radio/TV technician for help.*

3.2 *Canada*

3.2.1 *For EVMs issued with an Industry Canada Certificate of Conformance to RSS-210 or RSS-247*

Concerning EVMs Including Radio Transmitters:

This device complies with Industry Canada license-exempt RSSs. Operation is subject to the following two conditions:

(1) this device may not cause interference, and (2) this device must accept any interference, including interference that may cause undesired operation of the device.

Concernant les EVMs avec appareils radio:

Le présent appareil est conforme aux CNR d'Industrie Canada applicables aux appareils radio exempts de licence. L'exploitation est autorisée aux deux conditions suivantes: (1) l'appareil ne doit pas produire de brouillage, et (2) l'utilisateur de l'appareil doit accepter tout brouillage radioélectrique subi, même si le brouillage est susceptible d'en compromettre le fonctionnement.

Concerning EVMs Including Detachable Antennas:

Under Industry Canada regulations, this radio transmitter may only operate using an antenna of a type and maximum (or lesser) gain approved for the transmitter by Industry Canada. To reduce potential radio interference to other users, the antenna type and its gain should be so chosen that the equivalent isotropically radiated power (e.i.r.p.) is not more than that necessary for successful communication. This radio transmitter has been approved by Industry Canada to operate with the antenna types listed in the user guide with the maximum permissible gain and required antenna impedance for each antenna type indicated. Antenna types not included in this list, having a gain greater than the maximum gain indicated for that type, are strictly prohibited for use with this device.

Concernant les EVMs avec antennes détachables

Conformément à la réglementation d'Industrie Canada, le présent émetteur radio peut fonctionner avec une antenne d'un type et d'un gain maximal (ou inférieur) approuvé pour l'émetteur par Industrie Canada. Dans le but de réduire les risques de brouillage radioélectrique à l'intention des autres utilisateurs, il faut choisir le type d'antenne et son gain de sorte que la puissance isotrope rayonnée équivalente (p.i.r.e.) ne dépasse pas l'intensité nécessaire à l'établissement d'une communication satisfaisante. Le présent émetteur radio a été approuvé par Industrie Canada pour fonctionner avec les types d'antenne énumérés dans le manuel d'usage et ayant un gain admissible maximal et l'impédance requise pour chaque type d'antenne. Les types d'antenne non inclus dans cette liste, ou dont le gain est supérieur au gain maximal indiqué, sont strictement interdits pour l'exploitation de l'émetteur

3.3 *Japan*

3.3.1 *Notice for EVMs delivered in Japan:* Please see http://www.tij.co.jp/lsds/ti_ja/general/eStore/notice_01.page 日本国内に輸入される評価用キット、ボードについては、次のところをご覧ください。

https://www.ti.com/ja-jp/legal/notice-for-evaluation-kits-delivered-in-japan.html

3.3.2 *Notice for Users of EVMs Considered "Radio Frequency Products" in Japan:* EVMs entering Japan may not be certified by TI as conforming to Technical Regulations of Radio Law of Japan.

If User uses EVMs in Japan, not certified to Technical Regulations of Radio Law of Japan, User is required to follow the instructions set forth by Radio Law of Japan, which includes, but is not limited to, the instructions below with respect to EVMs (which for the avoidance of doubt are stated strictly for convenience and should be verified by User):

1. Use EVMs in a shielded room or any other test facility as defined in the notification #173 issued by Ministry of Internal Affairs and Communications on March 28, 2006, based on Sub-section 1.1 of Article 6 of the Ministry's Rule for Enforcement of Radio Law of Japan,
2. Use EVMs only after User obtains the license of Test Radio Station as provided in Radio Law of Japan with respect to EVMs, or
3. Use of EVMs only after User obtains the Technical Regulations Conformity Certification as provided in Radio Law of Japan with respect to EVMs. Also, do not transfer EVMs, unless User gives the same notice above to the transferee. Please note that if User does not follow the instructions above, User will be subject to penalties of Radio Law of Japan.

【無線電波を送信する製品の開発キットをお使いになる際の注意事項】 開発キットの中には技術基準適合証明を受けていないものがあります。 技術適合証明を受けていないもののご使用に際しては、電波法遵守のため、以下のいずれかの措置を取っていただく必要がありますのでご注意ください。

1. 電波法施行規則第6条第1項第1号に基づく平成18年3月28日総務省告示第173号で定められた電波暗室等の試験設備でご使用いただく。
2. 実験局の免許を取得後ご使用いただく。
3. 技術基準適合証明を取得後ご使用いただく。

なお、本製品は、上記の「ご使用にあたっての注意」を譲渡先、移転先に通知しない限り、譲渡、移転できないものとします。

上記を遵守頂けない場合は、電波法の罰則が適用される可能性があることをご留意ください。 日本テキサス・インスツルメンツ株式会社

東京都新宿区西新宿 6 丁目 2 4 番 1 号

西新宿三井ビル

3.3.3 *Notice for EVMs for Power Line Communication:* Please see http://www.tij.co.jp/lsds/ti_ja/general/eStore/notice_02.page

電力線搬送波通信についての開発キットをお使いになる際の注意事項については、次のところをご覧ください。https://www.ti.com/ja-jp/legal/notice-for-evaluation-kits-for-power-line-communication.html

3.4 *European Union*

3.4.1 *For EVMs subject to EU Directive 2014/30/EU (Electromagnetic Compatibility Directive)*:

This is a class A product intended for use in environments other than domestic environments that are connected to a low-voltage power-supply network that supplies buildings used for domestic purposes. In a domestic environment this product may cause radio interference in which case the user may be required to take adequate measures.

4 *EVM Use Restrictions and Warnings:*

4.1 EVMS ARE NOT FOR USE IN FUNCTIONAL SAFETY AND/OR SAFETY CRITICAL EVALUATIONS, INCLUDING BUT NOT LIMITED TO EVALUATIONS OF LIFE SUPPORT APPLICATIONS.

4.2 User must read and apply the user guide and other available documentation provided by TI regarding the EVM prior to handling or using the EVM, including without limitation any warning or restriction notices. The notices contain important safety information related to, for example, temperatures and voltages.

4.3 *Safety-Related Warnings and Restrictions:*

4.3.1 User shall operate the EVM within TI's recommended specifications and environmental considerations stated in the user guide, other available documentation provided by TI, and any other applicable requirements and employ reasonable and customary safeguards. Exceeding the specified performance ratings and specifications (including but not limited to input and output voltage, current, power, and environmental ranges) for the EVM may cause personal injury or death, or property damage. If there are questions concerning performance ratings and specifications, User should contact a TI field representative prior to connecting interface electronics including input power and intended loads. Any loads applied outside of the specified output range may also result in unintended and/or inaccurate operation and/or possible permanent damage to the EVM and/or interface electronics. Please consult the EVM user guide prior to connecting any load to the EVM output. If there is uncertainty as to the load specification, please contact a TI field representative. During normal operation, even with the inputs and outputs kept within the specified allowable ranges, some circuit components may have elevated case temperatures. These components include but are not limited to linear regulators, switching transistors, pass transistors, current sense resistors, and heat sinks, which can be identified using the information in the associated documentation. When working with the EVM, please be aware that the EVM may become very warm.

4.3.2 EVMs are intended solely for use by technically qualified, professional electronics experts who are familiar with the dangers and application risks associated with handling electrical mechanical components, systems, and subsystems. User assumes all responsibility and liability for proper and safe handling and use of the EVM by User or its employees, affiliates, contractors or designees. User assumes all responsibility and liability to ensure that any interfaces (electronic and/or mechanical) between the EVM and any human body are designed with suitable isolation and means to safely limit accessible leakage currents to minimize the risk of electrical shock hazard. User assumes all responsibility and liability for any improper or unsafe handling or use of the EVM by User or its employees, affiliates, contractors or designees.

4.4 User assumes all responsibility and liability to determine whether the EVM is subject to any applicable international, federal, state, or local laws and regulations related to User's handling and use of the EVM and, if applicable, User assumes all responsibility and liability for compliance in all respects with such laws and regulations. User assumes all responsibility and liability for proper disposal and recycling of the EVM consistent with all applicable international, federal, state, and local requirements.

5. *Accuracy of Information:* To the extent TI provides information on the availability and function of EVMs, TI attempts to be as accurate as possible. However, TI does not warrant the accuracy of EVM descriptions, EVM availability or other information on its websites as accurate, complete, reliable, current, or error-free.

6. *Disclaimers:*

6.1 EXCEPT AS SET FORTH ABOVE, EVMS AND ANY MATERIALS PROVIDED WITH THE EVM (INCLUDING, BUT NOT LIMITED TO, REFERENCE DESIGNS AND THE DESIGN OF THE EVM ITSELF) ARE PROVIDED "AS IS" AND "WITH ALL FAULTS." TI DISCLAIMS ALL OTHER WARRANTIES, EXPRESS OR IMPLIED, REGARDING SUCH ITEMS, INCLUDING BUT NOT LIMITED TO ANY EPIDEMIC FAILURE WARRANTY OR IMPLIED WARRANTIES OF MERCHANTABILITY OR FITNESS FOR A PARTICULAR PURPOSE OR NON-INFRINGEMENT OF ANY THIRD PARTY PATENTS, COPYRIGHTS, TRADE SECRETS OR OTHER INTELLECTUAL PROPERTY RIGHTS.

6.2 EXCEPT FOR THE LIMITED RIGHT TO USE THE EVM SET FORTH HEREIN, NOTHING IN THESE TERMS SHALL BE CONSTRUED AS GRANTING OR CONFERRING ANY RIGHTS BY LICENSE, PATENT, OR ANY OTHER INDUSTRIAL OR INTELLECTUAL PROPERTY RIGHT OF TI, ITS SUPPLIERS/LICENSORS OR ANY OTHER THIRD PARTY, TO USE THE EVM IN ANY FINISHED END-USER OR READY-TO-USE FINAL PRODUCT, OR FOR ANY INVENTION, DISCOVERY OR IMPROVEMENT, REGARDLESS OF WHEN MADE, CONCEIVED OR ACQUIRED.

7. *USER'S INDEMNITY OBLIGATIONS AND REPRESENTATIONS.* USER WILL DEFEND, INDEMNIFY AND HOLD TI, ITS LICENSORS AND THEIR REPRESENTATIVES HARMLESS FROM AND AGAINST ANY AND ALL CLAIMS, DAMAGES, LOSSES, EXPENSES, COSTS AND LIABILITIES (COLLECTIVELY, "CLAIMS") ARISING OUT OF OR IN CONNECTION WITH ANY HANDLING OR USE OF THE EVM THAT IS NOT IN ACCORDANCE WITH THESE TERMS. THIS OBLIGATION SHALL APPLY WHETHER CLAIMS ARISE UNDER STATUTE, REGULATION, OR THE LAW OF TORT, CONTRACT OR ANY OTHER LEGAL THEORY, AND EVEN IF THE EVM FAILS TO PERFORM AS DESCRIBED OR EXPECTED.

8. *Limitations on Damages and Liability:*

   8.1 *General Limitations*. IN NO EVENT SHALL TI BE LIABLE FOR ANY SPECIAL, COLLATERAL, INDIRECT, PUNITIVE, INCIDENTAL, CONSEQUENTIAL, OR EXEMPLARY DAMAGES IN CONNECTION WITH OR ARISING OUT OF THESE TERMS OR THE USE OF THE EVMS , REGARDLESS OF WHETHER TI HAS BEEN ADVISED OF THE POSSIBILITY OF SUCH DAMAGES. EXCLUDED DAMAGES INCLUDE, BUT ARE NOT LIMITED TO, COST OF REMOVAL OR REINSTALLATION, ANCILLARY COSTS TO THE PROCUREMENT OF SUBSTITUTE GOODS OR SERVICES, RETESTING, OUTSIDE COMPUTER TIME, LABOR COSTS, LOSS OF GOODWILL, LOSS OF PROFITS, LOSS OF SAVINGS, LOSS OF USE, LOSS OF DATA, OR BUSINESS INTERRUPTION. NO CLAIM, SUIT OR ACTION SHALL BE BROUGHT AGAINST TI MORE THAN TWELVE (12) MONTHS AFTER THE EVENT THAT GAVE RISE TO THE CAUSE OF ACTION HAS OCCURRED.

   8.2 *Specific Limitations.* IN NO EVENT SHALL TI'S AGGREGATE LIABILITY FROM ANY USE OF AN EVM PROVIDED HEREUNDER, INCLUDING FROM ANY WARRANTY, INDEMITY OR OTHER OBLIGATION ARISING OUT OF OR IN CONNECTION WITH THESE TERMS, , EXCEED THE TOTAL AMOUNT PAID TO TI BY USER FOR THE PARTICULAR EVM(S) AT ISSUE DURING THE PRIOR TWELVE (12) MONTHS WITH RESPECT TO WHICH LOSSES OR DAMAGES ARE CLAIMED. THE EXISTENCE OF MORE THAN ONE CLAIM SHALL NOT ENLARGE OR EXTEND THIS LIMIT.

9. *Return Policy.* Except as otherwise provided, TI does not offer any refunds, returns, or exchanges. Furthermore, no return of EVM(s) will be accepted if the package has been opened and no return of the EVM(s) will be accepted if they are damaged or otherwise not in a resalable condition. If User feels it has been incorrectly charged for the EVM(s) it ordered or that delivery violates the applicable order, User should contact TI. All refunds will be made in full within thirty (30) working days from the return of the components(s), excluding any postage or packaging costs.

10. *Governing Law:* These terms and conditions shall be governed by and interpreted in accordance with the laws of the State of Texas, without reference to conflict-of-laws principles. User agrees that non-exclusive jurisdiction for any dispute arising out of or relating to these terms and conditions lies within courts located in the State of Texas and consents to venue in Dallas County, Texas. Notwithstanding the foregoing, any judgment may be enforced in any United States or foreign court, and TI may seek injunctive relief in any United States or foreign court.

Mailing Address: Texas Instruments, Post Office Box 655303, Dallas, Texas 75265
Copyright © 2023, Texas Instruments Incorporated

IMPORTANT NOTICE AND DISCLAIMER

TI PROVIDES TECHNICAL AND RELIABILITY DATA (INCLUDING DATASHEETS), DESIGN RESOURCES (INCLUDING REFERENCE DESIGNS), APPLICATION OR OTHER DESIGN ADVICE, WEB TOOLS, SAFETY INFORMATION, AND OTHER RESOURCES “AS IS” AND WITH ALL FAULTS, AND DISCLAIMS ALL WARRANTIES, EXPRESS AND IMPLIED, INCLUDING WITHOUT LIMITATION ANY IMPLIED WARRANTIES OF MERCHANTABILITY, FITNESS FOR A PARTICULAR PURPOSE OR NON-INFRINGEMENT OF THIRD PARTY INTELLECTUAL PROPERTY RIGHTS.

These resources are intended for skilled developers designing with TI products. You are solely responsible for (1) selecting the appropriate TI products for your application, (2) designing, validating and testing your application, and (3) ensuring your application meets applicable standards, and any other safety, security, regulatory or other requirements.

These resources are subject to change without notice. TI grants you permission to use these resources only for development of an application that uses the TI products described in the resource. Other reproduction and display of these resources is prohibited. No license is granted to any other TI intellectual property right or to any third party intellectual property right. TI disclaims responsibility for, and you fully indemnify TI and its representatives against any claims, damages, costs, losses, and liabilities arising out of your use of these resources.

TI’s products are provided subject to TI’s Terms of Sale, TI’s General Quality Guidelines, or other applicable terms available either on ti.com or provided in conjunction with such TI products. TI’s provision of these resources does not expand or otherwise alter TI’s applicable warranties or warranty disclaimers for TI products. Unless TI explicitly designates a product as custom or customer-specified, TI products are standard, catalog, general purpose devices.

TI objects to and rejects any additional or different terms you may propose.

Copyright © 2026, Texas Instruments Incorporated

Last updated 10/2025