EVM User's Guide: LP-EM-CC2341R10

CC2341R10 LaunchPad™ Development Kit

Description

This CC2341R10 LaunchPad™ development kit speeds up development with the SimpleLink™ Bluetooth® Low Energy microcontroller (MCU) with support for Bluetooth Low Energy (LE), IEEE 802.15.4 PHY and MAC, and 2.4GHz proprietary protocols. The SimpleLink Low Power F3 SDK provides software support.

Get Started

1. Order the LP-EM-CC2341R10 board.
2. Get the latest SimpleLink Low Power F3 SDK .
3. Download the comprehensive LP-EM-CC2341R10 design files in the TI reference design page.
4. See the latest features at the CC2341R10 product page.

Features

- CC2341R10 48MHz, 32-bit Arm®Cortex®-M0+ Wireless MCU
- PCB inverted F antenna optimized for operation up to +8dBm at 2.4GHz ISM band and SMA connector for external antenna
- 20-pin LP-EM Debug connector for a LaunchPad XDS110 Debugger (LP-XDS110 or LP-XDS110ET, sold separately)
- 40-pin dual-gender BoosterPack™ connectors, allowing access to all I/O signals for the BoosterPack plug-in modules
- Two LEDs, two user buttons

Applications

- Medical
- Building automation
- Lighting
- Factory automation and control
- Retail automation and payment—electronic point of sale
- Grid infrastructure
- Communication equipment
- Personal electronics

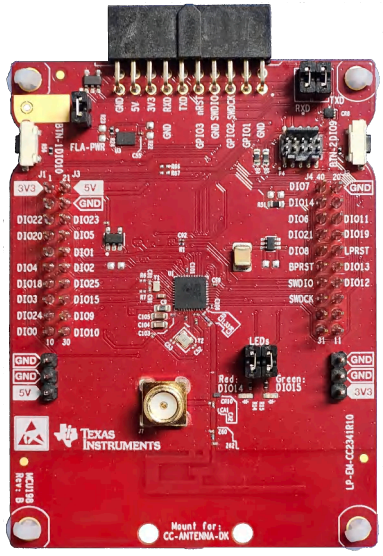

Copyright © 2026 Texas Instruments Incorporated

1 Evaluation Module Overview

1.1 Introduction

The CC2341R10 LaunchPad kit (LP-EM-CC2341R10) brings easy Bluetooth Low Energy connectivity to the LaunchPad ecosystem with the Simplelink ultra-low power CC2341R10 wireless MCU.

The CC2341R10 is a wireless MCU targeting Bluetooth Low Energy, ZigBee®, Thread, and Proprietary 2.4GHz applications. The CC2341R10 has a 48MHz, 32-bit Arm Cortex-M0+ as the main processor, advanced security with Hardware Security Module (HSM), and a rich peripheral set that includes 12-bit ADC, UART, SPI, I^2C, I^2S, and timers.

The CC2341R10 LaunchPad kit is supported by the Simplelink Starter app for iOS™ and Android™. This app connects your LaunchPad to a smartphone using Bluetooth. The Starter app supports reading the LaunchPad buttons, controlling LEDs, and all I/O signals on the BoosterPack connectors.

The CC2341R10 LaunchPad kit can also be upgraded to the latest firmware version with the over-the-air (OTA) upgrade from the Simplelink Starter app.

1.2 Kit Contents

- LP-EM-CC2341R10 LaunchPad development board
- 2-wire cable with F-F connectors
- 10-pin 1.27mm (0.05") flat ribbon cable with F-F connectors
- Standard Terms and Conditions for EVMs
- Abbreviated Terms and Conditions for EVMs
- Quick Start Guide for LP-EM-CC2341R10

1.3 Specification

The LP-EM-CC2341R10 is designed using the CC2341R10 wireless MCU that has a 48MHz Arm Cortex-M0+ processor, 1024kB of in-system programmable flash, 42kB of ROM for bootloader, and 96kB of ultra-low leakage SRAM with full RAM retention in standby mode. In addition, the LP-EM-CC2341R10 is a 2.4GHz RF transceiver compatible with Bluetooth Low Energy and IEEE 802.15.4 PHY and MAC, contains an integrated balun, supports over-the-air upgrade (OTA), and has a Serial Wire Debug (SWD) interface.

The MCU consumes 3.4mA in active mode running CoreMark® at 70µA/MHz, about 0.8µA in standby mode and 138nA in shutdown mode with wake-up on a pin.

The Radio consumes 5.9mA in RX mode, 6.0mA in TX mode at 0dBm and 12.1mA in TX at +8dBm. In addition, the radio is capable of reaching -102dBm sensitivity for Bluetooth Low Energy 125kbps and -96.2dBm sensitivity for Bluetooth Low Energy 1Mbps.

The LP-EM-CC2341R10 has support for 2-pin SWD debugging and a 32kHz external XTAL for the lowest power consumption and accurate RTC timekeeping. Each feature uses two pins that can be re-used as GPIOs if desired, bringing the number of GPIOs to a maximum of 26. In addition, this LaunchPad can support:

- 3 × 16-bit and 1 × 32-bit general-purpose timers, quadrature decode mode support
- 12-bit ADC, 1.2Msps with external reference, up to 8 external ADC inputs
- 1 × low power comparator
- 2 × UART
- 2 × SPI
- 2 × I^2C
- 1 × I^2S
- Real-time clock (RTC)
- Integrated temperature and battery monitors
- Watchdog timer

Copyright © 2026 Texas Instruments Incorporated

1.4 Device Information

The CC2341R10 device is a 2.4GHz wireless microcontroller (MCU) targeting Bluetooth 5.4 Low Energy, ZigBee (3.0 and upcoming versions), Thread (1.3 and upcoming versions) and Proprietary 2.4GHz applications. This device is optimized for low-power wireless communications with Over the Air Download (OAD) support in building automation (wireless sensors, lighting control, beacons), appliances, asset tracking, medical, and personal electronics (toys, HID, stylus pens) markets. Highlighted features of CC2341R10 on this development kit include:

- Support for Bluetooth 5 features: LE 2Mbit PHY (high-speed mode), LE Coded 125kbps and 500kbps PHYs (long range), advertising extensions, multiple advertising sets, periodic advertising with responses (PAwR), channel selection algorithm #2 (CSA#2), as well as backward compatibility with earlier Bluetooth Low Energy specifications.
- Fully qualified Bluetooth software protocol stack included with the SimpleLink Low Power F3 SDK
- ZigBee protocol stack support in the SimpleLink Low Power F3 SDK
- Thread protocol stack support in SimpleLink TI Openthread SDK
- An isolated High Security Module (HSM) controller that handles accelerated cryptographic and random number generation operations, with secure key storage support and secure boot.
- Ultra-low standby current with full SRAM retention and a functional RTC that enables significant extension to battery life, especially for applications with longer sleep intervals.
- Integrated balun and RF Tx/Rx switches, allowing the radio to fully operate using a single RF pin and severely reducing the product's Bill-of-Materials (BoM).

The CC2341R10 device is part of the SimpleLink MCU platform, which consists of Wi-Fi®, Bluetooth Low Energy, Thread, ZigBee, Matter, Sub-1GHz MCUs, and host MCUs that all share a common, easy-to-use development environment with a single-core Software Development Kit (SDK) and a rich tool set. A one-time integration of the SimpleLink platform enables you to add any combination of the portfolio’s devices into your design, allowing excellent code reuse when adapting to changes in the product's requirements. For more information, visit the SimpleLink MCU platform.

Copyright © 2026 Texas Instruments Incorporated

2 Hardware

Figure 2-1 shows the location of the LP-EM-CC2341R10 connectors, buttons and switches, and LEDs. The CC2341R10 wireless microcontroller and antenna locations are also shown.

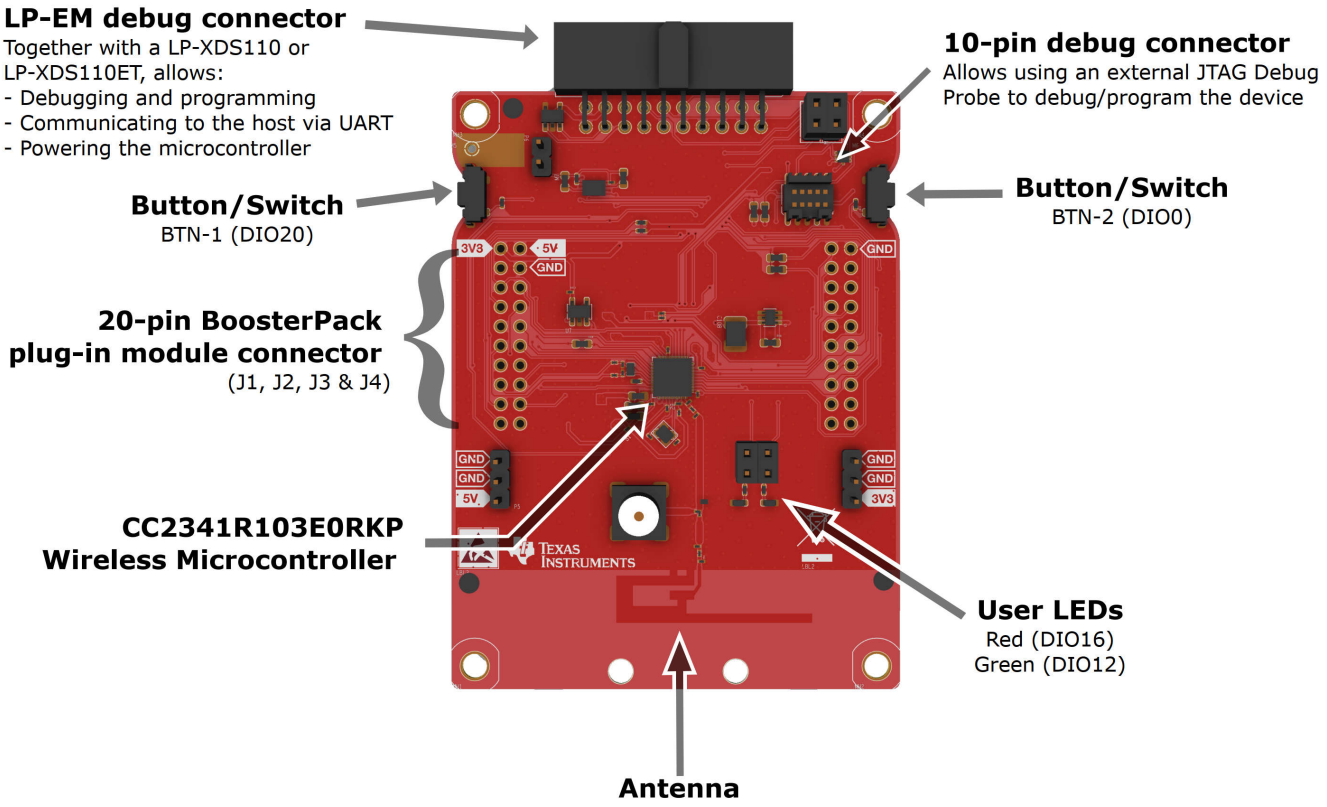

Figure 2-1. LP-EM-CC2341R10 Connector and User Interface Layout

2.1 Power Requirements

The LaunchPad is designed to be powered from three possible power sources:

- A LaunchPad EM Debug Probe (LP-XDS110 or LP-XDS110ET) connected to the LP-EM Debug connector. When using this option, the supply is fixed at 3.3V.
- An external power supply connected to the GND and the 3V3 pin header **P1**. There is also support for 5V on the pin header **P5**, but this is not required or used for LaunchPad operation. When powering externally, care must be taken to keep the board voltage within the operating range (1.8V to 3.6V) and the polarity correct.
- A CR2032 coin cell battery connected to the battery holder **BT1** on the bottom of the board. The LaunchPad has a battery inversion protection circuit based on U5.

Note

Even though the CC2341R10 supply voltage ranges from 1.8V to 3.8V, the maximum voltage of the LP-EM-CC2341R10 is limited by the XDS110 level shifters at 3.6V.

Note

The CC2341R10 LaunchPad does not feature protection circuits to isolate each power source. Care must be taken to prevent powering the board using two different power sources.

Additional details about how to power the LaunchPad are shown in the Hardware and Debug Setup section.

Copyright © 2026 Texas Instruments Incorporated

2.2 Temperature Range

The LaunchPad is designed for operation from -25℃ to +70℃. Note that other BoosterPack accessories and LaunchPads can have different temperature ranges and, when combined, these ranges are limited by the most restrictive values. Also, when powering the LaunchPad from an external battery, keep the system within the specified temperature operating range.

2.3 Energy Trace

EnergyTrace™ is available on any of the above compatible Debug Probes except the LP-XDS110. The tool can be used standalone as a power profiling tool, which allows ultra-low power measurements, or in EnergyTrace++ mode within a debug session, which allows for complete state monitoring and helps optimize the application for ultra-low-power consumption.

To use EnergyTrace, the XDS110 Debug Probe must provide power to the LP-EM-CC2341R10 to perform current measurements. EnergyTrace embedded in the LP-XDS110ET or in a separate LaunchPad only supports 3.3V supply voltage, but using a TMDSEMU110U with the optional EnergyTrace HDR adapter TMDSEMU110-ETH allows powering through the full range of the board voltages. The *Measuring CC13xx and CC26xx Current Consumption* application note describes how to run EnergyTrace from CCS.

2.4 Hardware and Debug Setup

The LP-EM-CC2341R10 LaunchPad does not include an onboard debug probe. Compatible debug probes are the LaunchPad XDS110 debug probe (LP-XDS110 or LP-XDS110ET), standalone XDS110 (TMDSEMU110U with the optional EnergyTrace HDR adapter TMDSEMU110-ETH), or a LaunchPad with an onboard debug probe.

2.4.1 Using a LaunchPad XDS110 Debug Probe

Before connecting the LP-XDS110 or LP-XDS110ET Debug Probe to the LP-EM-CC2341R10 , enable power by setting the TGT VDD jumper on the XDS110 Debug Probe to *XDS*. In this setting, the device voltage is fixed at 3.3V. If external power is provided to the LaunchPad, then set this jumper on the XDS110 Debug Probe to *EXT*. Afterward, connect the edge connector of the debugger to the edge connector of the LaunchPad and connect the USB port of the debugger to a computer.

The final configuration for this setup is shown in Figure 2-2, along with the correct jumper configuration for TGT VDD connected to *XDS* (as shown in the bottom-right corner of the XDS 110 Debug Probe).

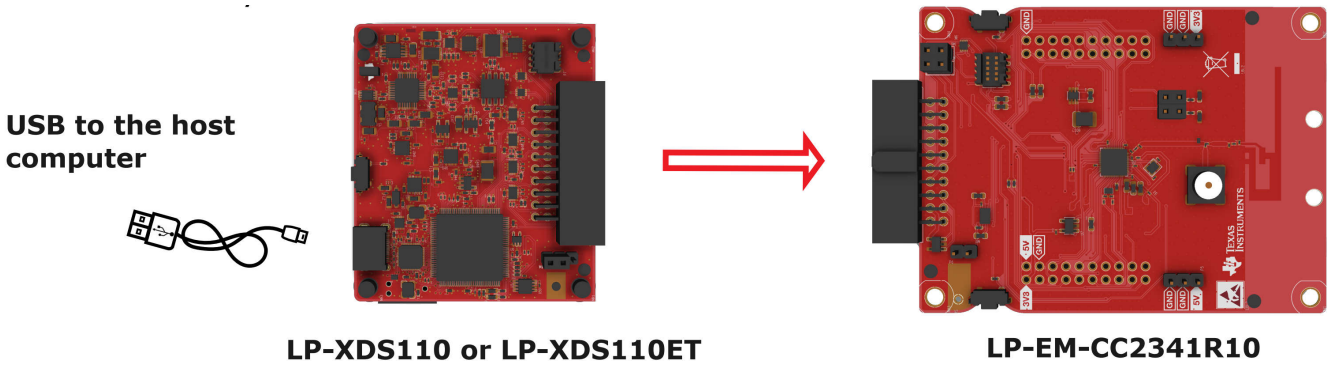

Figure 2-2. Connection of LP-EM-CC2341R10 With XDS110 Debug Probe

Copyright © 2026 Texas Instruments Incorporated

2.4.2 Using a Generic XDS110 Debug Probe, Including a Separate LaunchPad

On the separate LaunchPad:

- Remove all of the header jumpers except GND and 3V3.
- Set the power jumper to reflect your usage. Set the jumper to *XDS110 power* if the LP-EM-CC2341R10 is to be powered by the separate LaunchPad. Set this to *Extern Pwr* if external power is to be provided instead. Care must be taken to keep the board voltage within the operating range (1.8V to 3.6V).
- Connect one end of the 10-pin Debug Cable to the XDS110 Out connector on the LaunchPad.
- Connect one end of the 2-wire Power Cable to the 3V3 and GND header of the LaunchPad.

On the LP-EM-CC2341R10:

- Connect the other end of the 10-pin Debug Cable to the Target In connector.
- Connect the other end of the 2-wire Power Cable to the GND and 3V3 header. Verify that the polarity is correct.

The final configuration is shown in Figure 2-3.

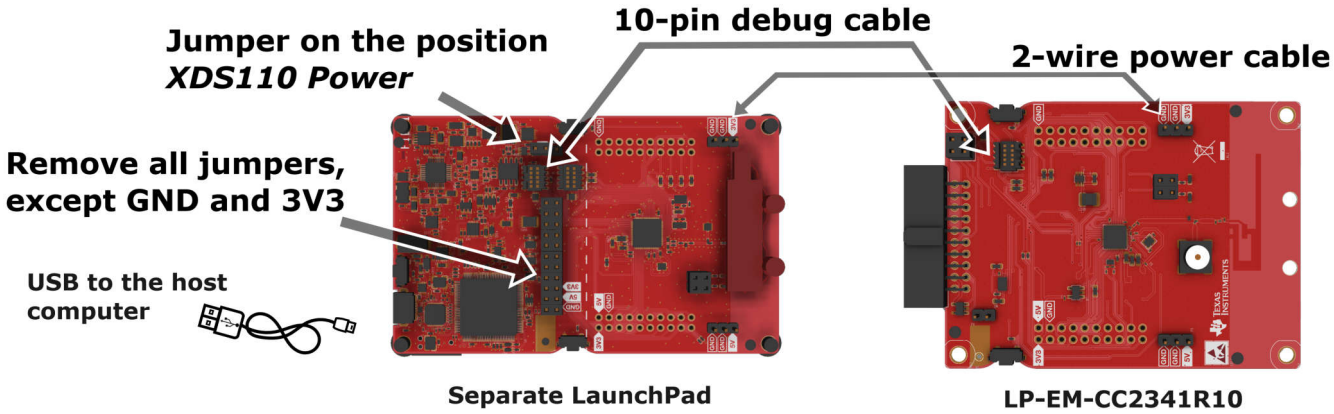

Figure 2-3. Connection of LP-EM-CC2341R10 With XDS110 Debug Probe

2.5 BoosterPack Connector Pinout

Figure 2-4 shows the BoosterPack header connection diagram.

Copyright © 2026 Texas Instruments Incorporated

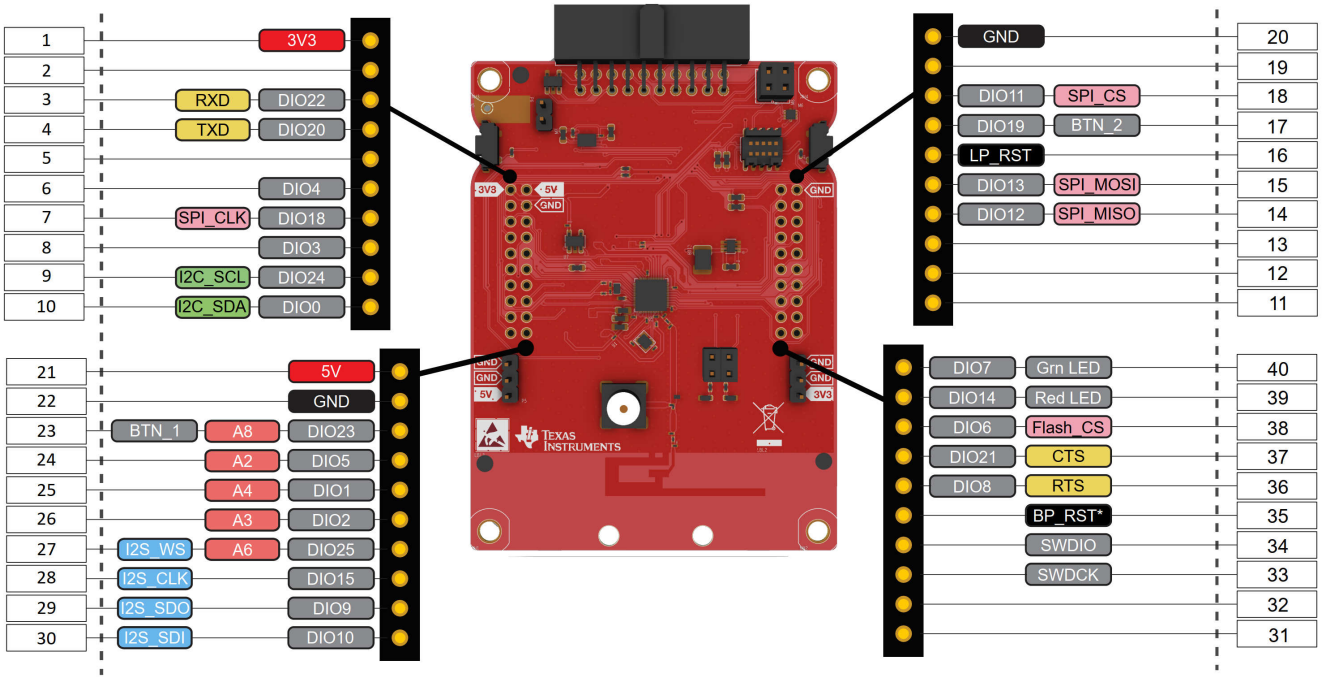

Figure 2-4. LP-EM-CC2341R10 BoosterPack Connector Pinout

2.6 XDS110 Interface Connector

The LP-EM-CC2341R10 P3 connector pinout is shown in Table 2-1. For the pin 1 location, please refer to Section 5 or the full set of LP-EM-CC2341R10 design files.

Table 2-1. XDS110 Interface Connector (P3) Pinout Description

Pin Number	Pin Name	Pin Description
1	GND	Ground connection
2	NC	No connect
3	XDS_GPIO1	Connection to GPIO1 of XDS board
4	NC	No connect
5	XDS_GPIO2	Connection to GPIO2 of XDS board
6	WMCU_SWDCK	SWDCK connection to WMCU device
7	GND	Ground connection
8	WMCU_SWDIO	SWDIO connection to WMCU device
9	XDS_GPIO3	Connection to GPIO3 of XDS board
10	WMCU_RESET	RESET connection to WMCU device
11	NC	No connect
12	WMCU_TXD	TXD connection to WMCU device
13	GND	Ground connection
14	WMCU_RXD	RXD connection to WMCU device
15	XDS_BoardID_SCL	XDS SCL connection to Launchpad board ID
16	WMCU_VDD	VDD connection to WMCU device
17	XDS_BoardID_SDA	XDS SDA connection to Launchpad board ID
18	5V0_BP	5V connection
19	GND	Ground connection
20	GND	Ground connection

Copyright © 2026 Texas Instruments Incorporated

2.7 Debug Interface Connector

The LP-EM-CC2341R10 contains a 10-pin ARM Cortex debug connector (P4) that allows using an external JTAG/SWD Debug Probe to debug AND program the device. The pinout information can be found in Table 2-2. For the pin 1 location, please refer to Section 5 or the full set of LP-EM-CC2341R10 design files.

Table 2-2. 10-Pin Debug Interface Connector Pinout

Pin Number	Pin Name	Pin Description
1	WMCU_VDD	VDD connection to WMCU device
2	WMCU_SWDIO	SWDIO connection to WMCU device
3	GND	Ground connection
4	WMCU_SWDCK	SWDCK connection to WMCU device
5	GND	Ground connection
6	NC	No connect
7	NC	No connect
8	NC	No connect
9	GND	Ground connection
10	WMCU_RESET	RESET connection to WMCU device

Copyright © 2026 Texas Instruments Incorporated

2.8 Jumper Information

The LP-EM-CC2341R10 has several user-configurable jumpers as shown in Figure 2-1.

2.8.1 LED Configuration

- When the **P2** LaunchPad jumper is connected across pins 1 and 2, this connects **DIO14** to the onboard Red LED. The DIO14 is permanently connected to the BoosterPack header **J4:39**.
- When the **P2** LaunchPad jumper is connected across pins 3 and 4, this connects **DIO7** to the onboard Green LED. The **DIO7** is permanently connected to the BoosterPack header **J4:40**.

2.8.2 UART Backchannel

When jumpers are placed vertically across pins 1-2 and 3-4 of the **P10** header (**RXD** and **TXD** positions), the CC2341R10 UART port is connected to the LP-XDS110/LP-XDS110ET UART backchannel. The UART backchannel is a convenient way to monitor UART activity on the host computer for ease of debugging, and is required for most of the SimpleLink F3 SDK examples.

2.8.3 External Flash IC Power

When a jumper is placed vertically across pins 1-2 of the **P6** header (**FLA-PWR**), the external Flash memory U3 is powered on. The external Flash is required for any applications that use SPI Flash or for OAD external example projects of the SimpleLink F3 SDK.

In addition, the LP-EM-CC2341R10 has two additional headers that allow access to both 5V and GND through header P5 and 3.3V and GND through header P1 as show in Figure 2-1.

2.9 Push Buttons

The LP-EM-CC2341R10 has two user-configurable push buttons as shown in Figure 2-1:

- **BTN-1** is connected to **DIO23** of the CC2341R10. This is also directly connected to the BoosterPack header **J3:23**.
- **BTN-2** is connected to **DIO19** of the CC2341R10. This is also directly connected to the BoosterPack header **J2:17**.

Copyright © 2026 Texas Instruments Incorporated

3 Advanced Use of the LaunchPad Hardware

Note

The topics in this section involve hardware modifications to your development kit. Your board can be damaged if appropriate soldering equipment is not used and proper ESD mitigation procedures are not followed. Make sure you also have the expertise to perform these modifications.

3.1 External Antenna

The RF path of the LP-EM-CC2341R10 by default uses the Inverted F antenna printed on the PCB. The SMA connector near the PCB antenna can be used instead, which is useful for tests using an external antenna or for RF-conducted measurements.

To do that, the capacitor **CA2** (as shown in Figure 3-1) has to reroute the RF path from the antenna to the SMA: desolder CA2 from the original vertical position and resolder CA2 horizontally to connect to the pad near the SMA.

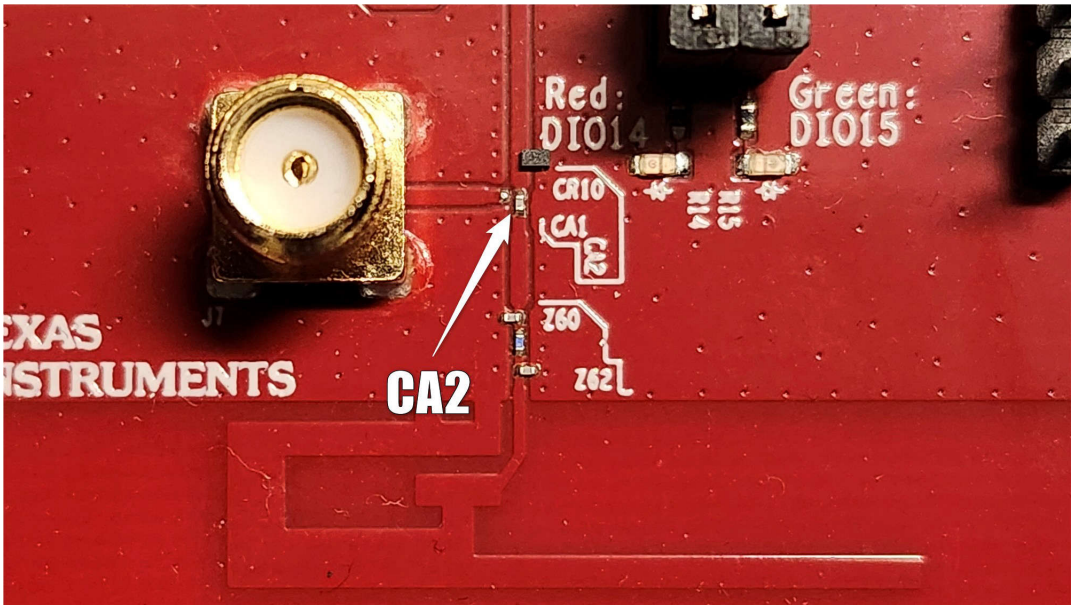

Figure 3-1. Capacitor CA2 Location

3.2 Reset Selection on BoosterPack Connector

The LP-EM-CC2341R10 board connects the reset signal to pin **J2:16** (LPRST) of the BoosterPack connector (see Figure 2-4). Depending on the BoosterPack used, you can need to connect this reset signal to **J4:35** (BPRST). To do this, solder a 0Ω resistor in R52 and remove the 0Ω from R51 as shown in Figure 3-2.

Copyright © 2026 Texas Instruments Incorporated

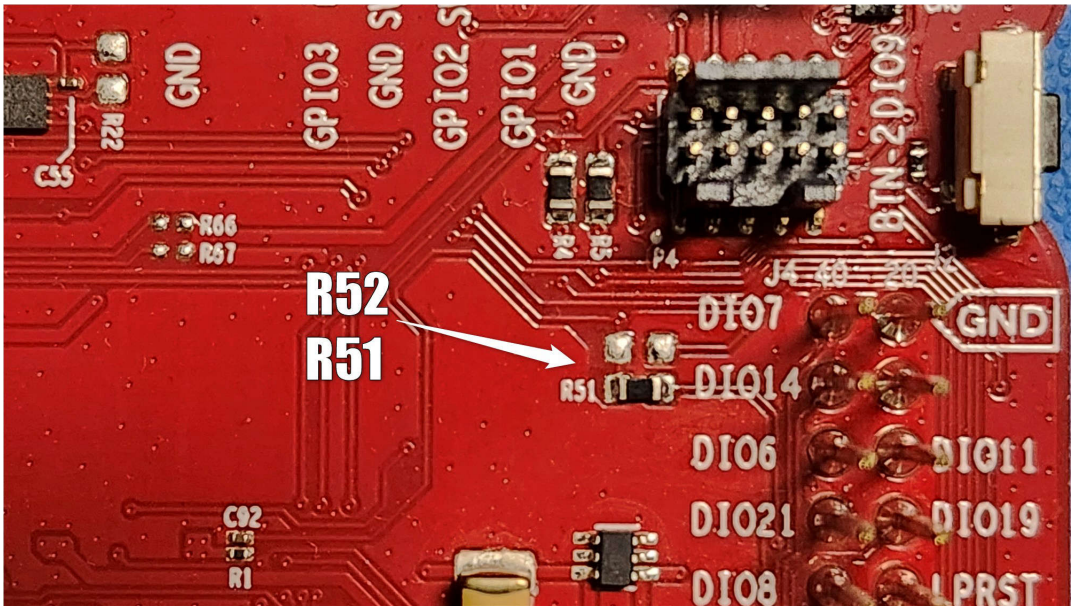

Figure 3-2. Location of R51 and R52

3.3 I²C Pullup Resistors

The LP-EM-CC2341R10 supports the I²C port of the CC2341R10 device: pins **DIO0** (SDA) and **DIO24** (SCL), also connected to the BoosterPack connector **J1:10** and **J1:9** respectively. The board already comes with pullup resistors R66 and R67 populated. However, if long bus lines or additional devices are connected to the I²C bus, the pullup resistors can need to be recalculated. To properly do this calculation, consult the *Understanding the I²C Bus* application note.

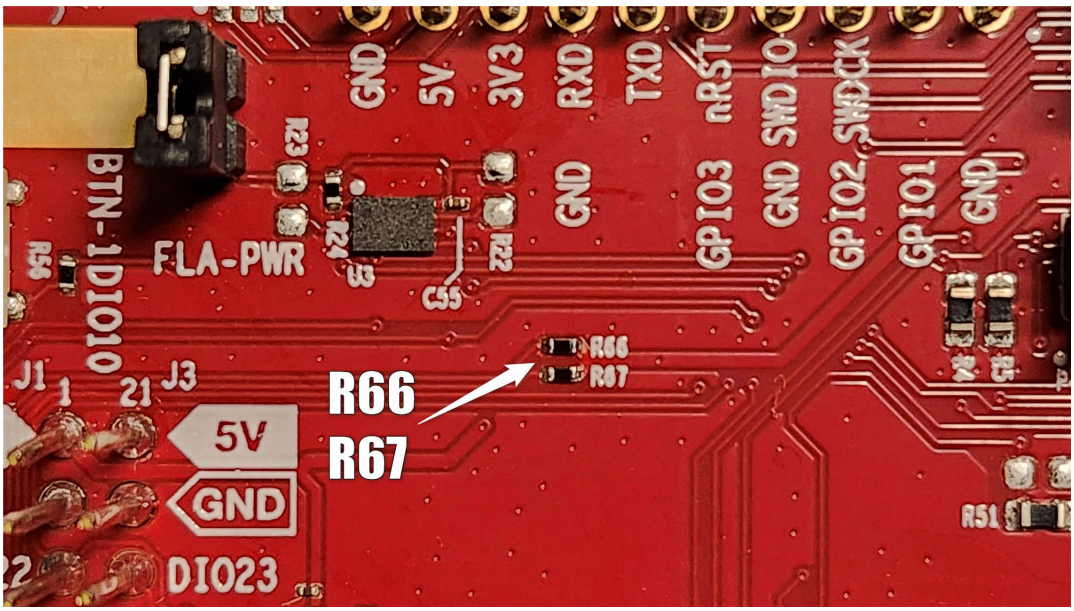

Figure 3-3. Location of R66 and R67

Copyright © 2026 Texas Instruments Incorporated

4 Software

4.1 Getting Started

The best way to start development with your LP-EM-CC2341R10 is to visit the SimpleLink Academy for Low Power F3 SDK, which provides a comprehensive set of trainings for the SimpleLink MCU family.

4.2 Out-of-Box Demo

The LP-EM-CC2341R10 is pre-programmed with the Data Stream Application software that allows wireless communication with smartphones and tablets over Bluetooth Low Energy. Simply connect the LP-EM-CC2341R10 to the XDS110 Debug Probe and then to a computer or power supply.

When power is applied, the board runs a power-on self-test and the green LED is lit.

To test the functionality of the Data Stream Application, download the Simplelink Connect application from one of the two App Stores below:

Apple App Store	Google Play Store

This app lets you control and visualize the Data Stream demo software running on the LaunchPad. Figure 4-1 shows an example of the Data Stream application.

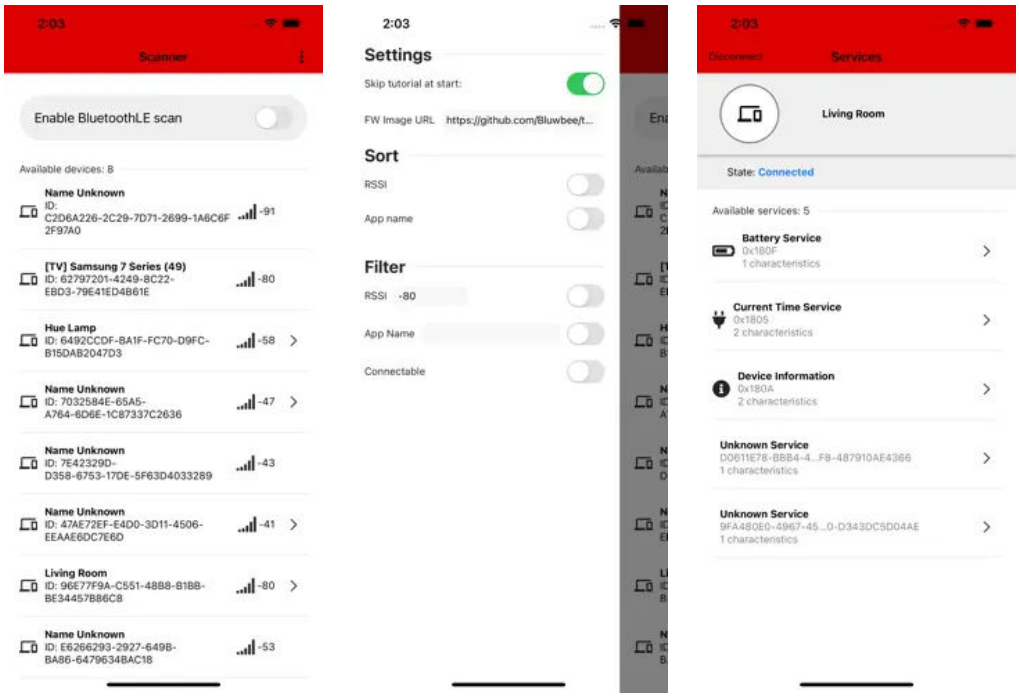

Figure 4-1. Data Stream Application SW example

Copyright © 2026 Texas Instruments Incorporated

The Data Stream Application status information can also be seen on the UART port of the host PC, as shown in Figure 4-2.

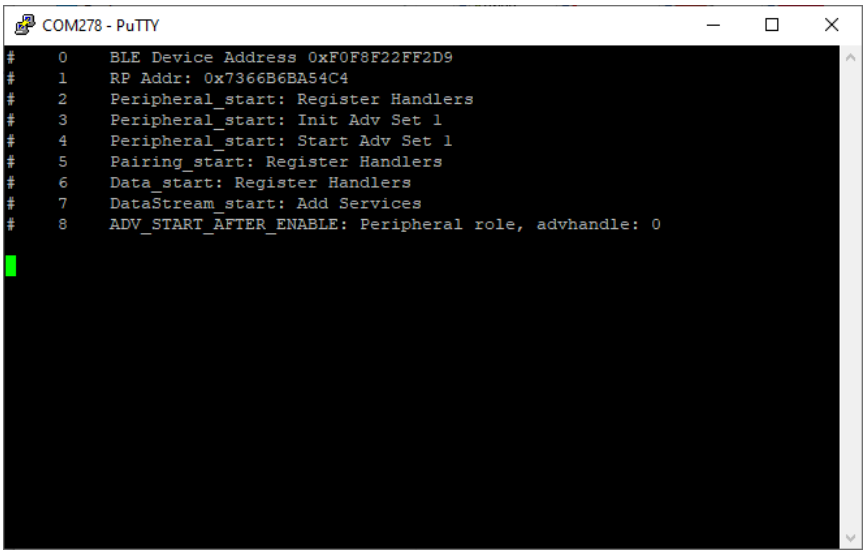

Figure 4-2. Data Stream Application status example

Note

Important: Clear your phone or tablet's Bluetooth cache before running the application or when changing the application on the CC2341R10. If this step is not performed, then you can not see the available characteristics in the smartphone app. Note that closing the smartphone app or rebooting your phone does NOT clear the Bluetooth cache.

- iOS: This is accomplished by toggling Bluetooth Off then On through either *Settings* > *Bluetooth* menu or the Control Center (Bluetooth icon).
- Android: The procedure can vary by make, model, and software version. On recent versions, navigate to *Settings* > *Apps* Scroll over to *All* > *Choose Bluetooth Share* and tap on *Clear Cache.*

Copyright © 2026 Texas Instruments Incorporated

5 Hardware Design Files

5.1 Schematics

Figure 5-1, Figure 5-2, and Figure 5-3 show the schematic implementation of the LP-EM-CC2341R10. The full reference schematic can be downloaded from LP-EM-CC2341R10 design files.

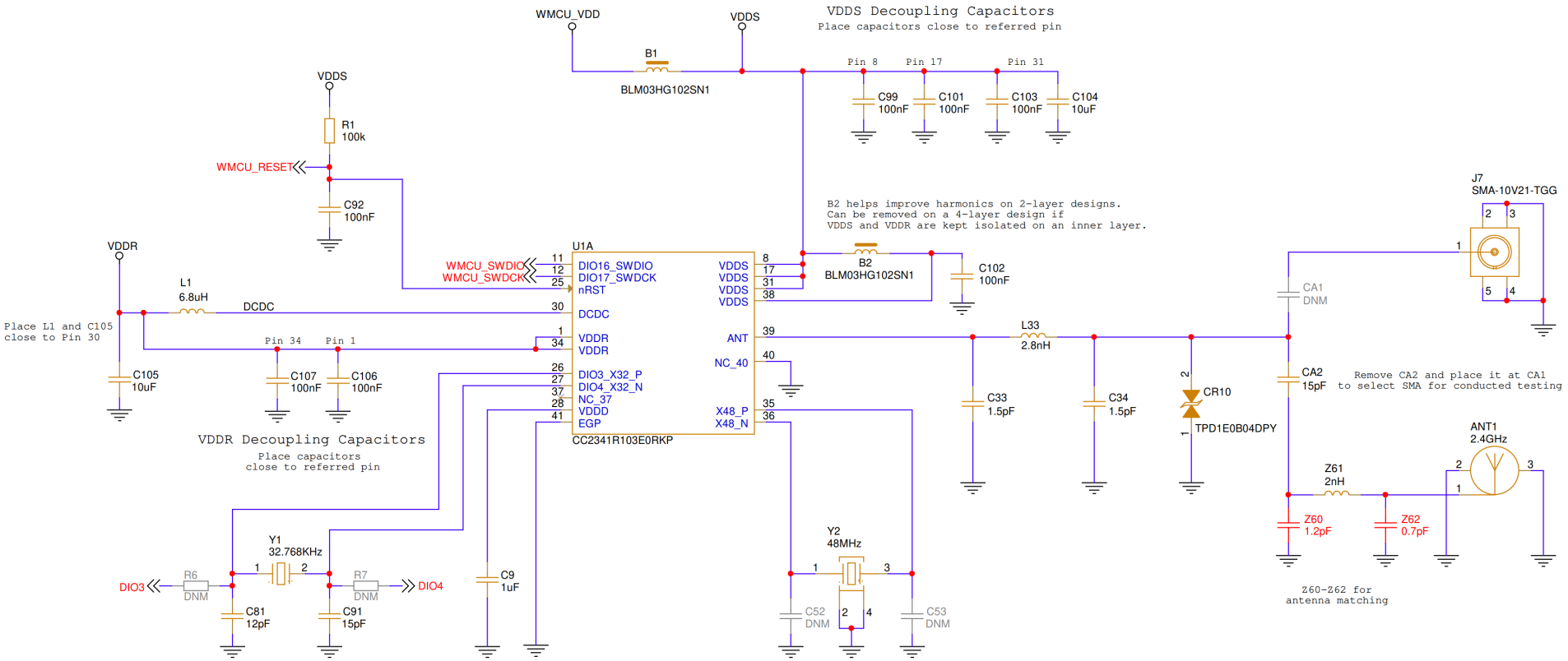

Figure 5-1. LP-EM-CC2341R10 Schematic Page 1

Copyright © 2026 Texas Instruments Incorporated

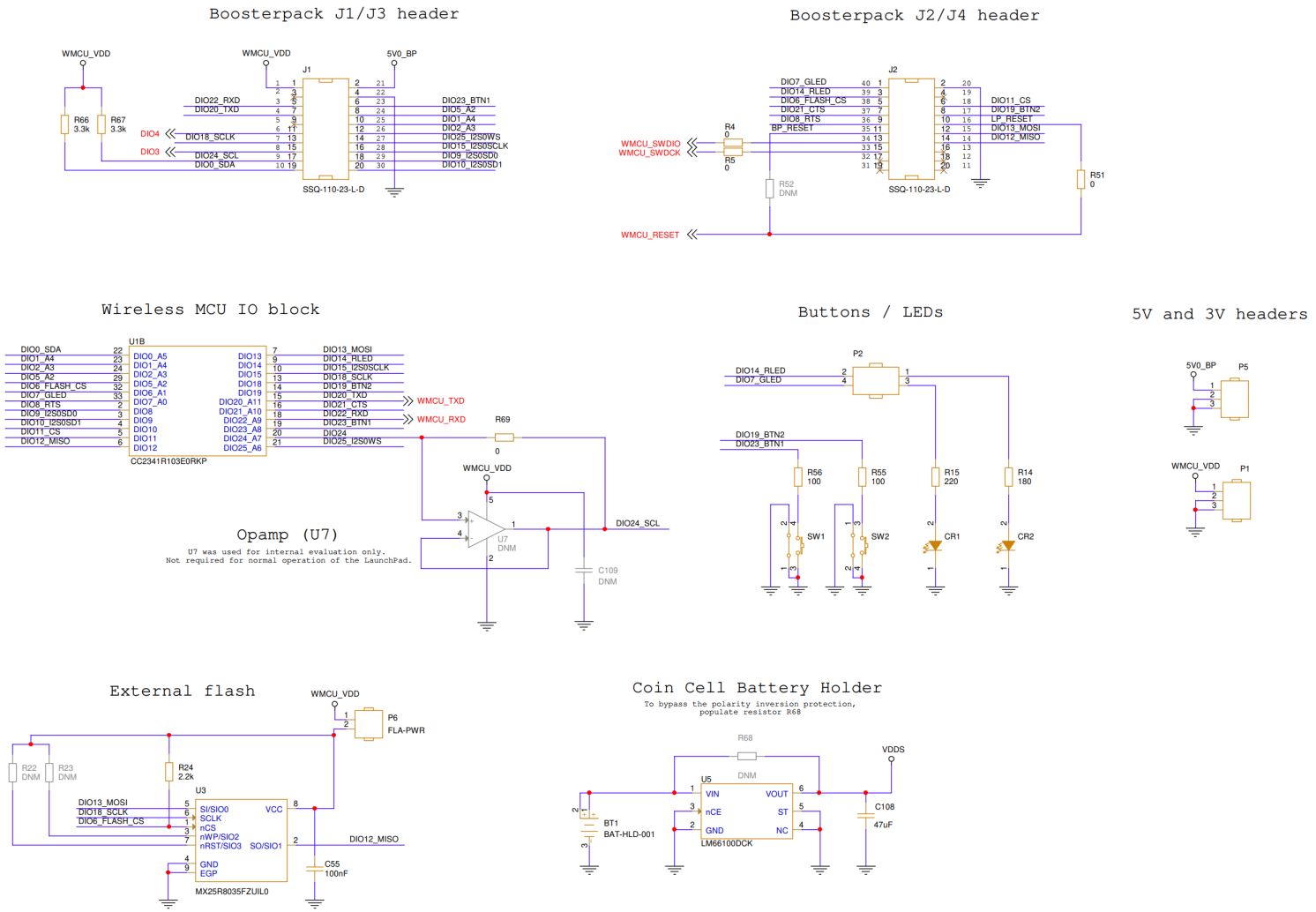

Figure 5-2. LP-EM-CC2341R10 Schematic Page 2

Copyright © 2026 Texas Instruments Incorporated

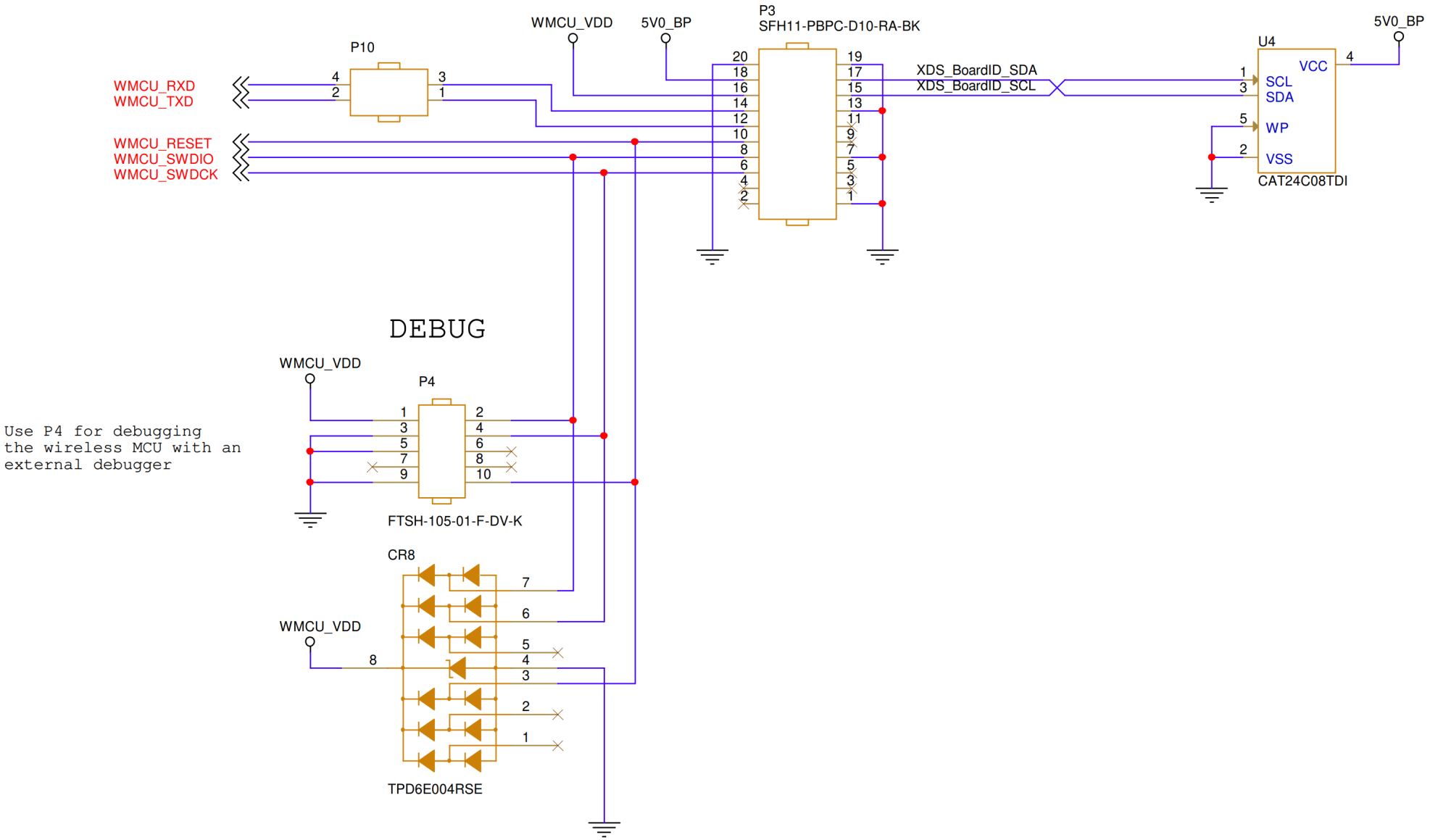

Figure 5-3. LP-EM-CC2341R10 Schematic Page 3

Copyright © 2026 Texas Instruments Incorporated

5.2 PCB Layouts

The top and bottom side PCB layout view of the LP-EM-CC2341R10 can be seen in Figure 5-4 and Figure 5-5, respectively. The full LP-EM-CC2341R10 layout files can be downloaded from the LP-EM-CC2341R10 design files.

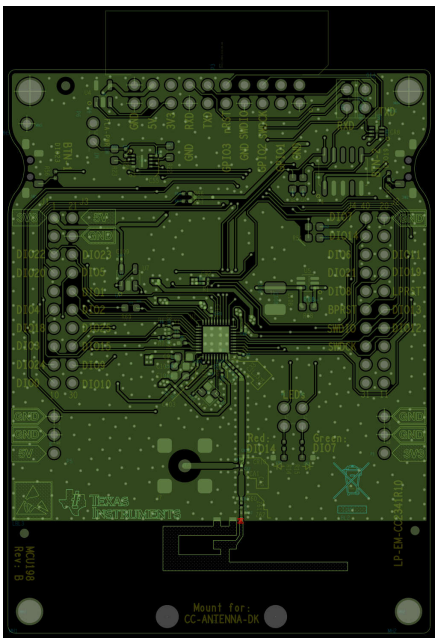

Figure 5-4. Top Side PCB Layout View

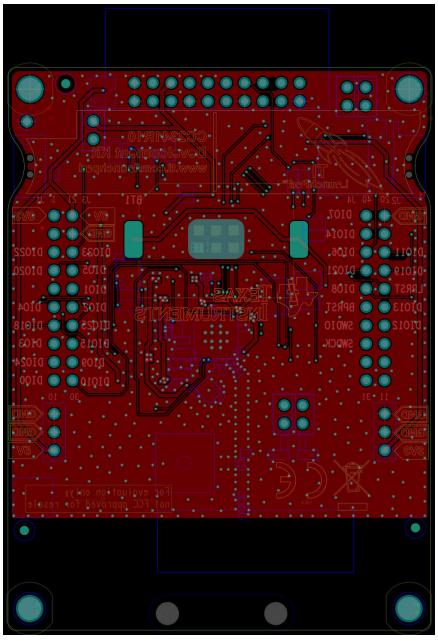

Figure 5-5. Bottom Side PCB Layout View

Copyright © 2026 Texas Instruments Incorporated

5.3 Bill of Materials (BOM)

The next pages show the simplified Bill of Materials (BOM) for the LP-EM-CC2341R10. The complete BOM can be downloaded from LP-EM-CC2341R10 design files.

Quantity	Designator	Value	Manufacturer	Part Number	Description
Quantity	Designator	Value	Manufacturer	Part Number	Description
1	ANT1	2.4GHz	TEXAS INSTRUMENTS	DN007	NON COMPONENT, ANTENNA, 2.4GHz INVERTED F ANTENNA, NOT APPLY
2	B1 B2	BLM03HG102SN1	MURATA	BLM03HG102SN1D	FILTER, EMI, FERRITE BEAD, 1k@100MHz, -25%/+25%, -55DEGC/ +125DEGC, 0201, SMD
1	BT1	BAT-HLD-001	TE CONNECTIVITY	BAT-HLD-001	BATTERY, HOLDER, CR2032 AND CR2025 BATTERIES, SMD
1	C9	1uF	MURATA	GRM155Z71A105KE01D	CAPACITOR, CERAMIC X7R, 1uF, -10%/ +10%, 10V, -55DEGC/+125DEGC, 0402, SMD
2	C33 C34	1.5pF	MURATA	GRM0335C1H1R5BA01J	CAPACITOR, CERAMIC C0G/NP0, 1.5pF, -0.1pF/+0.1pF, 50V, -55DEGC/ +125DEGC, 0201, SMD
8	C55 C92 C99 C101 C102 C103 C106 C107	100nF	MURATA	GRM033C71A104KE14D	CAPACITOR, CERAMIC X7S, 100nF, -10%/+10%, 10V, -55DEGC/+125DEGC, 0201, SMD
1	C81	12pF	MURATA	GRM0335C1H120GA01D	CAPACITOR, CERAMIC C0G/NP0, 12pF, -2%/+2%, 50V, -55DEGC/+125DEGC, 0201, SMD
2	C91 CA2	15pF	MURATA	GRM0335C1H150GA01D	CAPACITOR, CERAMIC C0G/NP0, 15pF, -2%/+2%, 50V, -55DEGC/+125DEGC, 0201, SMD
2	C104 C105	10uF	MURATA	GRM188Z71A106KA73D	CAPACITOR, CERAMIC X7R, 10uF, -10%/+10%, 10V, -55DEGC/+125DEGC, 0603, SMD
1	C108	47uF	MURATA	GRM32ER61C476KE15L	CAPACITOR, CERAMIC X5R, 47uF, -10%/+10%, 16V, -55DEGC/+85DEGC, 1210, SMD
1	CR1	LPL296-J2L2-25	OSRAM	LP L296-J2L2-25	OPTO, LED, InGaAlP, GREEN, 560nm, 2V, 0.02A, 0603, SMD
1	CR2	LS L296-P2Q2-1	OSRAM	LS L296-P2Q2-1	OPTO, LED, RED, 630nm, 2V, 0.02A, 0603, SMD
1	CR8	TPD6E004RSE	TEXAS INSTRUMENTS	TPD6E004RSER	DIODE, PROTECTION, ESD ARRAY - 6 CHANNELS, VCC:0.9V TO 5.5V, VBR:7V, -40DEGC/+85DEGC, QFN8, SMD

Copyright © 2026 Texas Instruments Incorporated

Quantity	Designator	Value	Manufacturer	Part Number	Description
1	CR10	TPD1E0B04DPY	TEXAS INSTRUMENTS	TPD1E0B04DPYR	DIODE, PROTECTION, TVS, BID, 6.7V, 15W, -40DEGC/+125DEGC, X1SON2, SMD
2	J1 J2	SSQ-110-23-L-D	SAMTEC	SSQ-110-23-L-D	CONNECTOR, HEADER, FEMALE, STRAIGHT, 2 ROW(S), 20 PIN(S), 2.54mm, PTH
1	J7	SMA-10V21-TGG	HUS-TSAN	SMA-10V21-TGG	CONNECTOR, COAX, RF, FEMALE, STRAIGHT, 1 PIN(S), SMD
1	L1	6.8uH	MURATA	LQM18DN6R8M70L	INDUCTOR, SHIELDED, 6.8uH, -20%/+20%, 0.33A, -55DEGC/+125DEGC, 0603, SMD
1	L33	2.8nH	MURATA	LQP03TN2N8B02J	INDUCTOR, RF, NON-MAGNETIC CORE, UNSHIELDED, 2.8nH, -0.1nH/+0.1nH, 0.5A, -55DEGC/+125DEGC, 0201, SMD
5	M1 M2 M7 M8 M9	SNT-100-BK-G	SAMTEC	SNT-100-BK-G	MECHANICAL, SHUNT, CURRENT RATING 4.3A PER PIN, 2.54 X 5.08 X 6.1mm, BLACK
4	M3 M4 M5 M6	DCB-12D	SUZHOU SOLY ELECTRICIAN	DCB-12D	MECHANICAL, ACCESSORY, SPACER SUPPORT, PCB DIA. 3mm, NYLON 66, NPTH
2	P1 P5	BB02-HC031-KB1-603000	GRADCONN	BB02-HC031-KB1-603000	CONNECTOR, HEADER, MALE, STRAIGHT, 1 ROW(S), 3 PIN(S), PITCH 2.54mm, PTH
2	P2 P10	BB02-HJ041-KB1-603000	GRADCONN	BB02-HJ041-KB1-603000	CONNECTOR, HEADER, MALE, STRAIGHT, 2 ROW(S), 4 PIN(S), PITCH 2.54mm, PTH
1	P3	SFH11-PBPC-D10-RA-BK	SULLINS	SFH11-PBPC-D10-RA-BK	CONNECTOR, HEADER, FEMALE, RIGHT ANGLE, 2 ROW(S), 20 PIN(S), PITCH 2.54mm, PTH
1	P4	FTSH-105-01-F-DV-K	SAMTEC	FTSH-105-01-F-DV-K	CONNECTOR, HEADER, MALE, STRAIGHT, 2 ROW(S), 10 PIN(S), PITCH 1.27mm, SMD
1	P6	BB02-HC021-KB1-603000	GRADCONN	BB02-HC021-KB1-603000	CONNECTOR, HEADER, MALE, STRAIGHT, 1 ROW(S), 2 PIN(S), PITCH 2.54mm, PTH
1	R1	100k	VISHAY	CRCW0201100KJNED	RESISTOR, THICK FILM, 100k, -5%/+5%, 0.05W, 30V, -55DEGC/+155DEGC, 0201, SMD
4	R4 R5 R51 R69	0	VISHAY	CRCW06030000Z0EC	RESISTOR, THICK FILM, JUMPER, 0, 0R/+0.02R, 0.1W, 2A, -55DEGC/+155DEGC, 0603, SMD

Copyright © 2026 Texas Instruments Incorporated

Quantity	Designator	Value	Manufacturer	Part Number	Description
1	R14	180	VISHAY	CRCW0402180RJNED	RESISTOR, THICK FILM, 180, -5%/ +5%, 0.063W, 50V, -55DEGC/+155DEGC, 0402, SMD
1	R15	220	VISHAY	CRCW0402220RJNED	RESISTOR, THICK FILM, 220, -5%/ +5%, 0.063W, 50V, -55DEGC/+155DEGC, 0402, SMD
1	R24	2.2k	VISHAY	CRCW04022K20JNED	RESISTOR, THICK FILM, 2.2k, -5%/ +5%, 0.063W, 50V, -55DEGC/+155DEGC, 0402, SMD
2	R55 R56	100	VISHAY	CRCW0402100RJNED	RESISTOR, THICK FILM, 100, -5%/ +5%, 0.063W, 50V, -55DEGC/+155DEGC, 0402, SMD
2	R66 R67	3.3k	VISHAY	CRCW04023K30JNED	RESISTOR, THICK FILM, 3.3k, -5%/ +5%, 0.063W, 50V, -55DEGC/+155DEGC, 0402, SMD
2	SW1 SW2	1188E-1K2	DIPTRONICS	1188E-1K2-V-TR	SWITCH, TACTILE, 0.05A@12VDC, 0.05A@250VAC, SMD
1	U1	CC2341R103E0RKP	TEXAS INSTRUMENTS	CC2341R10RKP	IC, CUSTOM, TEXAS INSTRUMENTS, CC2341R10RKP, QFN40-EP, SMD
1	U3	MX25R8035FZUIL0	MACRONIX	MX25R8035FZUIL0	IC, MEMORY, FLASH, OTHER, 8Mbit, 8M X 1bit / 4M X 2bit / 2M X 4bit, 12ns, 1.65V TO 3.6V, uSON8, SMD
1	U4	CAT24C08TDI	ONSEMI	CAT24C08TDI-GT3	IC, MEMORY, EEPROM, SERIAL, I2C, 8kbit, 1k X 8bit, 900ns, 1.7V TO 5.5V, TSOT23-5, SMD
1	U5	LM66100DCK	TEXAS INSTRUMENTS	LM66100DCKR	IC, ANALOG, 79mOhm LOW IQ IDEAL DIODE WITH INPUT POLARITY PROTECTION, VIN:1.5V TO 5.5V, VOUT:1V TO 5.5V, SC70-6, SMD
1	Y1	32.768KHz	TAI-SAW	TZ3359DAAO73	CRYSTAL, RESONATOR, 32.768KHz, -380PPM/+380PPM, -40DEGC/+125DEGC, SMD
1	Y2	48MHz	TAI-SAW	TZ3908AAAO43	CRYSTAL, RESONATOR, 48MHz, -30PPM/+30PPM, -40DEGC/+125DEGC, SMD
1	Z60	1.2pF	MURATA	GRM0335C1H1R2BA01J	CAPACITOR, CERAMIC C0G/NP0, 1.2pF, 50V, -0.1pF/+0.1pF, -55DEGC/ +125DEGC, 0201, SMD
1	Z61	2nH	MURATA	LQP03TN2N0B02J	INDUCTOR, RF, NON-MAGNETIC CORE, UNSHIELDED, 2nH, -0.1nH/ +0.1nH, 0.6A, -55DEGC/+125DEGC, 0201, SMD

Copyright © 2026 Texas Instruments Incorporated

Quantity	Designator	Value	Manufacturer	Part Number	Description
1	Z62	0.7pF	MURATA	GRM0335C1HR70BA01J	CAPACITOR, CERAMIC C0G/NP0, 0.7pF, 50V, -0.1pF/+0.1pF, -55DEGC/ +125DEGC, 0201, SMD

Copyright © 2026 Texas Instruments Incorporated

6 Compliance Information

6.1 CE Compliance

Texas Instruments declares that this product is in compliance with Directive 2014/53/EU. The compliance has been verified in the operating band of 2402MHz to 2480MHz at +8dBm Tx Power setting. If you configure the EUT to operate outside the test conditions, operate inside a protected and controlled environment (such as a shielded chamber). This evaluation board is only for development and not an end product. Developers and integrators that incorporate the chipset in any end products are responsible for obtaining applicable regulatory approvals for such end products. See the EU Declaration of Conformity.

6.2 REACH Compliance

Texas Instruments declares that this product is in compliance with the EU REACH regulation.

6.3 Waste Electrical and Electronic Equipment (WEEE) Compliance



Waste Electrical and Electronic Equipment (WEEE)

This symbol means that according to local laws and regulations your product and/or battery shall be disposed of separately from household waste. When this product reaches its end of life, take it to a collection point designated by local authorities. Proper recycling of your product will protect human health and the environment.

Copyright © 2026 Texas Instruments Incorporated

7 Additional Information

7.1 Trademarks

LaunchPad™, SimpleLink™, BoosterPack™, and EnergyTrace™ are trademarks of Texas Instruments.
iOS™ is a trademark of Cisco.
Android™ is a trademark of Google LLC.
Bluetooth® is a registered trademark of Bluetooth SIG, Inc.
Arm® and Cortex® are registered trademarks of Arm Limited (or its subsidiaries) in the US and/or elsewhere.
ZigBee® is a registered trademark of ZigBee Alliance.
CoreMark® is a registered trademark of Embedded Microprocessor Benchmark Consortium Corporation.
Wi-Fi® is a registered trademark of Wi-Fi Alliance.
All trademarks are the property of their respective owners.

Copyright © 2026 Texas Instruments Incorporated

8 References

Development tools and software

- Texas Instruments, LP-EM-CC2341R10 LaunchPad Development Kit
- Texas Instruments, SimpleLink Low Power F3 SDK
- Texas Instruments, SmartRF™ Studio for simple radio configuration
- Texas Instruments, Code Composer Studio for software and application development
- Texas Instruments, SysConfig system configuration tool
- Texas Instruments, XDS110 Technology
- Texas Instruments, XDS110 Debug Probe User's Guide, user's guide.

Copyright © 2026 Texas Instruments Incorporated

STANDARD TERMS FOR EVALUATION MODULES

1. *Delivery:* TI delivers TI evaluation boards, kits, or modules, including any accompanying demonstration software, components, and/or documentation which may be provided together or separately (collectively, an “EVM” or “EVMs”) to the User (“User”) in accordance with the terms set forth herein. User's acceptance of the EVM is expressly subject to the following terms.

   1.1 EVMs are intended solely for product or software developers for use in a research and development setting to facilitate feasibility evaluation, experimentation, or scientific analysis of TI semiconductors products. EVMs have no direct function and are not finished products. EVMs shall not be directly or indirectly assembled as a part or subassembly in any finished product. For clarification, any software or software tools provided with the EVM (“Software”) shall not be subject to the terms and conditions set forth herein but rather shall be subject to the applicable terms that accompany such Software

   1.2 EVMs are not intended for consumer or household use. EVMs may not be sold, sublicensed, leased, rented, loaned, assigned, or otherwise distributed for commercial purposes by Users, in whole or in part, or used in any finished product or production system.

2 *Limited Warranty and Related Remedies/Disclaimers*:

   2.1 These terms do not apply to Software. The warranty, if any, for Software is covered in the applicable Software License Agreement.

   2.2 TI warrants that the TI EVM will conform to TI's published specifications for ninety (90) days after the date TI delivers such EVM to User. Notwithstanding the foregoing, TI shall not be liable for a nonconforming EVM if (a) the nonconformity was caused by neglect, misuse or mistreatment by an entity other than TI, including improper installation or testing, or for any EVMs that have been altered or modified in any way by an entity other than TI, (b) the nonconformity resulted from User's design, specifications or instructions for such EVMs or improper system design, or (c) User has not paid on time. Testing and other quality control techniques are used to the extent TI deems necessary. TI does not test all parameters of each EVM. User's claims against TI under this Section 2 are void if User fails to notify TI of any apparent defects in the EVMs within ten (10) business days after delivery, or of any hidden defects with ten (10) business days after the defect has been detected.

   2.3 TI's sole liability shall be at its option to repair or replace EVMs that fail to conform to the warranty set forth above, or credit User's account for such EVM. TI's liability under this warranty shall be limited to EVMs that are returned during the warranty period to the address designated by TI and that are determined by TI not to conform to such warranty. If TI elects to repair or replace such EVM, TI shall have a reasonable time to repair such EVM or provide replacements. Repaired EVMs shall be warranted for the remainder of the original warranty period. Replaced EVMs shall be warranted for a new full ninety (90) day warranty period.

WARNING

Evaluation Kits are intended solely for use by technically qualified, professional electronics experts who are familiar with the dangers and application risks associated with handling electrical mechanical components, systems, and subsystems.

User shall operate the Evaluation Kit within TI’s recommended guidelines and any applicable legal or environmental requirements as well as reasonable and customary safeguards. Failure to set up and/or operate the Evaluation Kit within TI’s recommended guidelines may result in personal injury or death or property damage. Proper set up entails following TI’s instructions for electrical ratings of interface circuits such as input, output and electrical loads.

NOTE:

EXPOSURE TO ELECTROSTATIC DISCHARGE (ESD) MAY CAUSE DEGREDATION OR FAILURE OF THE EVALUATION KIT; TI RECOMMENDS STORAGE OF THE EVALUATION KIT IN A PROTECTIVE ESD BAG.

3 *Regulatory Notices:*

3.1 *United States*

3.1.1 *Notice applicable to EVMs not FCC-Approved:*

FCC NOTICE: This kit is designed to allow product developers to evaluate electronic components, circuitry, or software associated with the kit to determine whether to incorporate such items in a finished product and software developers to write software applications for use with the end product. This kit is not a finished product and when assembled may not be resold or otherwise marketed unless all required FCC equipment authorizations are first obtained. Operation is subject to the condition that this product not cause harmful interference to licensed radio stations and that this product accept harmful interference. Unless the assembled kit is designed to operate under part 15, part 18 or part 95 of this chapter, the operator of the kit must operate under the authority of an FCC license holder or must secure an experimental authorization under part 5 of this chapter.

3.1.2 *For EVMs annotated as FCC – FEDERAL COMMUNICATIONS COMMISSION Part 15 Compliant:*

CAUTION

This device complies with part 15 of the FCC Rules. Operation is subject to the following two conditions: (1) This device may not cause harmful interference, and (2) this device must accept any interference received, including interference that may cause undesired operation.

Changes or modifications not expressly approved by the party responsible for compliance could void the user's authority to operate the equipment.

FCC Interference Statement for Class A EVM devices

NOTE: This equipment has been tested and found to comply with the limits for a Class A digital device, pursuant to part 15 of the FCC Rules. These limits are designed to provide reasonable protection against harmful interference when the equipment is operated in a commercial environment. This equipment generates, uses, and can radiate radio frequency energy and, if not installed and used in accordance with the instruction manual, may cause harmful interference to radio communications. Operation of this equipment in a residential area is likely to cause harmful interference in which case the user will be required to correct the interference at his own expense.

FCC Interference Statement for Class B EVM devices

NOTE: This equipment has been tested and found to comply with the limits for a Class B digital device, pursuant to part 15 of the FCC Rules. These limits are designed to provide reasonable protection against harmful interference in a residential installation. This equipment generates, uses and can radiate radio frequency energy and, if not installed and used in accordance with the instructions, may cause harmful interference to radio communications. However, there is no guarantee that interference will not occur in a particular installation. If this equipment does cause harmful interference to radio or television reception, which can be determined by turning the equipment off and on, the user is encouraged to try to correct the interference by one or more of the following measures:

- *Reorient or relocate the receiving antenna.*
- *Increase the separation between the equipment and receiver.*
- *Connect the equipment into an outlet on a circuit different from that to which the receiver is connected.*
- *Consult the dealer or an experienced radio/TV technician for help.*

3.2 *Canada*

3.2.1 *For EVMs issued with an Industry Canada Certificate of Conformance to RSS-210 or RSS-247*

Concerning EVMs Including Radio Transmitters:

This device complies with Industry Canada license-exempt RSSs. Operation is subject to the following two conditions:

(1) this device may not cause interference, and (2) this device must accept any interference, including interference that may cause undesired operation of the device.

Concernant les EVMs avec appareils radio:

Le présent appareil est conforme aux CNR d'Industrie Canada applicables aux appareils radio exempts de licence. L'exploitation est autorisée aux deux conditions suivantes: (1) l'appareil ne doit pas produire de brouillage, et (2) l'utilisateur de l'appareil doit accepter tout brouillage radioélectrique subi, même si le brouillage est susceptible d'en compromettre le fonctionnement.

Concerning EVMs Including Detachable Antennas:

Under Industry Canada regulations, this radio transmitter may only operate using an antenna of a type and maximum (or lesser) gain approved for the transmitter by Industry Canada. To reduce potential radio interference to other users, the antenna type and its gain should be so chosen that the equivalent isotropically radiated power (e.i.r.p.) is not more than that necessary for successful communication. This radio transmitter has been approved by Industry Canada to operate with the antenna types listed in the user guide with the maximum permissible gain and required antenna impedance for each antenna type indicated. Antenna types not included in this list, having a gain greater than the maximum gain indicated for that type, are strictly prohibited for use with this device.

Concernant les EVMs avec antennes détachables

Conformément à la réglementation d'Industrie Canada, le présent émetteur radio peut fonctionner avec une antenne d'un type et d'un gain maximal (ou inférieur) approuvé pour l'émetteur par Industrie Canada. Dans le but de réduire les risques de brouillage radioélectrique à l'intention des autres utilisateurs, il faut choisir le type d'antenne et son gain de sorte que la puissance isotrope rayonnée équivalente (p.i.r.e.) ne dépasse pas l'intensité nécessaire à l'établissement d'une communication satisfaisante. Le présent émetteur radio a été approuvé par Industrie Canada pour fonctionner avec les types d'antenne énumérés dans le manuel d'usage et ayant un gain admissible maximal et l'impédance requise pour chaque type d'antenne. Les types d'antenne non inclus dans cette liste, ou dont le gain est supérieur au gain maximal indiqué, sont strictement interdits pour l'exploitation de l'émetteur

3.3 *Japan*

3.3.1 *Notice for EVMs delivered in Japan:* Please see http://www.tij.co.jp/lsds/ti_ja/general/eStore/notice_01.page 日本国内に輸入される評価用キット、ボードについては、次のところをご覧ください。

https://www.ti.com/ja-jp/legal/notice-for-evaluation-kits-delivered-in-japan.html

3.3.2 *Notice for Users of EVMs Considered "Radio Frequency Products" in Japan:* EVMs entering Japan may not be certified by TI as conforming to Technical Regulations of Radio Law of Japan.

If User uses EVMs in Japan, not certified to Technical Regulations of Radio Law of Japan, User is required to follow the instructions set forth by Radio Law of Japan, which includes, but is not limited to, the instructions below with respect to EVMs (which for the avoidance of doubt are stated strictly for convenience and should be verified by User):

1. Use EVMs in a shielded room or any other test facility as defined in the notification #173 issued by Ministry of Internal Affairs and Communications on March 28, 2006, based on Sub-section 1.1 of Article 6 of the Ministry's Rule for Enforcement of Radio Law of Japan,
2. Use EVMs only after User obtains the license of Test Radio Station as provided in Radio Law of Japan with respect to EVMs, or
3. Use of EVMs only after User obtains the Technical Regulations Conformity Certification as provided in Radio Law of Japan with respect to EVMs. Also, do not transfer EVMs, unless User gives the same notice above to the transferee. Please note that if User does not follow the instructions above, User will be subject to penalties of Radio Law of Japan.

【無線電波を送信する製品の開発キットをお使いになる際の注意事項】 開発キットの中には技術基準適合証明を受けていないものがあります。 技術適合証明を受けていないもののご使用に際しては、電波法遵守のため、以下のいずれかの措置を取っていただく必要がありますのでご注意ください。

1. 電波法施行規則第6条第1項第1号に基づく平成18年3月28日総務省告示第173号で定められた電波暗室等の試験設備でご使用いただく。
2. 実験局の免許を取得後ご使用いただく。
3. 技術基準適合証明を取得後ご使用いただく。

なお、本製品は、上記の「ご使用にあたっての注意」を譲渡先、移転先に通知しない限り、譲渡、移転できないものとします。

上記を遵守頂けない場合は、電波法の罰則が適用される可能性があることをご留意ください。 日本テキサス・インスツルメンツ株式会社

東京都新宿区西新宿 6 丁目 2 4 番 1 号

西新宿三井ビル

3.3.3 *Notice for EVMs for Power Line Communication:* Please see http://www.tij.co.jp/lsds/ti_ja/general/eStore/notice_02.page

電力線搬送波通信についての開発キットをお使いになる際の注意事項については、次のところをご覧ください。https://www.ti.com/ja-jp/legal/notice-for-evaluation-kits-for-power-line-communication.html

3.4 *European Union*

3.4.1 *For EVMs subject to EU Directive 2014/30/EU (Electromagnetic Compatibility Directive)*:

This is a class A product intended for use in environments other than domestic environments that are connected to a low-voltage power-supply network that supplies buildings used for domestic purposes. In a domestic environment this product may cause radio interference in which case the user may be required to take adequate measures.

4 *EVM Use Restrictions and Warnings:*

4.1 EVMS ARE NOT FOR USE IN FUNCTIONAL SAFETY AND/OR SAFETY CRITICAL EVALUATIONS, INCLUDING BUT NOT LIMITED TO EVALUATIONS OF LIFE SUPPORT APPLICATIONS.

4.2 User must read and apply the user guide and other available documentation provided by TI regarding the EVM prior to handling or using the EVM, including without limitation any warning or restriction notices. The notices contain important safety information related to, for example, temperatures and voltages.

4.3 *Safety-Related Warnings and Restrictions:*

4.3.1 User shall operate the EVM within TI's recommended specifications and environmental considerations stated in the user guide, other available documentation provided by TI, and any other applicable requirements and employ reasonable and customary safeguards. Exceeding the specified performance ratings and specifications (including but not limited to input and output voltage, current, power, and environmental ranges) for the EVM may cause personal injury or death, or property damage. If there are questions concerning performance ratings and specifications, User should contact a TI field representative prior to connecting interface electronics including input power and intended loads. Any loads applied outside of the specified output range may also result in unintended and/or inaccurate operation and/or possible permanent damage to the EVM and/or interface electronics. Please consult the EVM user guide prior to connecting any load to the EVM output. If there is uncertainty as to the load specification, please contact a TI field representative. During normal operation, even with the inputs and outputs kept within the specified allowable ranges, some circuit components may have elevated case temperatures. These components include but are not limited to linear regulators, switching transistors, pass transistors, current sense resistors, and heat sinks, which can be identified using the information in the associated documentation. When working with the EVM, please be aware that the EVM may become very warm.

4.3.2 EVMs are intended solely for use by technically qualified, professional electronics experts who are familiar with the dangers and application risks associated with handling electrical mechanical components, systems, and subsystems. User assumes all responsibility and liability for proper and safe handling and use of the EVM by User or its employees, affiliates, contractors or designees. User assumes all responsibility and liability to ensure that any interfaces (electronic and/or mechanical) between the EVM and any human body are designed with suitable isolation and means to safely limit accessible leakage currents to minimize the risk of electrical shock hazard. User assumes all responsibility and liability for any improper or unsafe handling or use of the EVM by User or its employees, affiliates, contractors or designees.

4.4 User assumes all responsibility and liability to determine whether the EVM is subject to any applicable international, federal, state, or local laws and regulations related to User's handling and use of the EVM and, if applicable, User assumes all responsibility and liability for compliance in all respects with such laws and regulations. User assumes all responsibility and liability for proper disposal and recycling of the EVM consistent with all applicable international, federal, state, and local requirements.

5. *Accuracy of Information:* To the extent TI provides information on the availability and function of EVMs, TI attempts to be as accurate as possible. However, TI does not warrant the accuracy of EVM descriptions, EVM availability or other information on its websites as accurate, complete, reliable, current, or error-free.

6. *Disclaimers:*

6.1 EXCEPT AS SET FORTH ABOVE, EVMS AND ANY MATERIALS PROVIDED WITH THE EVM (INCLUDING, BUT NOT LIMITED TO, REFERENCE DESIGNS AND THE DESIGN OF THE EVM ITSELF) ARE PROVIDED "AS IS" AND "WITH ALL FAULTS." TI DISCLAIMS ALL OTHER WARRANTIES, EXPRESS OR IMPLIED, REGARDING SUCH ITEMS, INCLUDING BUT NOT LIMITED TO ANY EPIDEMIC FAILURE WARRANTY OR IMPLIED WARRANTIES OF MERCHANTABILITY OR FITNESS FOR A PARTICULAR PURPOSE OR NON-INFRINGEMENT OF ANY THIRD PARTY PATENTS, COPYRIGHTS, TRADE SECRETS OR OTHER INTELLECTUAL PROPERTY RIGHTS.

6.2 EXCEPT FOR THE LIMITED RIGHT TO USE THE EVM SET FORTH HEREIN, NOTHING IN THESE TERMS SHALL BE CONSTRUED AS GRANTING OR CONFERRING ANY RIGHTS BY LICENSE, PATENT, OR ANY OTHER INDUSTRIAL OR INTELLECTUAL PROPERTY RIGHT OF TI, ITS SUPPLIERS/LICENSORS OR ANY OTHER THIRD PARTY, TO USE THE EVM IN ANY FINISHED END-USER OR READY-TO-USE FINAL PRODUCT, OR FOR ANY INVENTION, DISCOVERY OR IMPROVEMENT, REGARDLESS OF WHEN MADE, CONCEIVED OR ACQUIRED.

7. *USER'S INDEMNITY OBLIGATIONS AND REPRESENTATIONS.* USER WILL DEFEND, INDEMNIFY AND HOLD TI, ITS LICENSORS AND THEIR REPRESENTATIVES HARMLESS FROM AND AGAINST ANY AND ALL CLAIMS, DAMAGES, LOSSES, EXPENSES, COSTS AND LIABILITIES (COLLECTIVELY, "CLAIMS") ARISING OUT OF OR IN CONNECTION WITH ANY HANDLING OR USE OF THE EVM THAT IS NOT IN ACCORDANCE WITH THESE TERMS. THIS OBLIGATION SHALL APPLY WHETHER CLAIMS ARISE UNDER STATUTE, REGULATION, OR THE LAW OF TORT, CONTRACT OR ANY OTHER LEGAL THEORY, AND EVEN IF THE EVM FAILS TO PERFORM AS DESCRIBED OR EXPECTED.

8. *Limitations on Damages and Liability:*

   8.1 *General Limitations*. IN NO EVENT SHALL TI BE LIABLE FOR ANY SPECIAL, COLLATERAL, INDIRECT, PUNITIVE, INCIDENTAL, CONSEQUENTIAL, OR EXEMPLARY DAMAGES IN CONNECTION WITH OR ARISING OUT OF THESE TERMS OR THE USE OF THE EVMS , REGARDLESS OF WHETHER TI HAS BEEN ADVISED OF THE POSSIBILITY OF SUCH DAMAGES. EXCLUDED DAMAGES INCLUDE, BUT ARE NOT LIMITED TO, COST OF REMOVAL OR REINSTALLATION, ANCILLARY COSTS TO THE PROCUREMENT OF SUBSTITUTE GOODS OR SERVICES, RETESTING, OUTSIDE COMPUTER TIME, LABOR COSTS, LOSS OF GOODWILL, LOSS OF PROFITS, LOSS OF SAVINGS, LOSS OF USE, LOSS OF DATA, OR BUSINESS INTERRUPTION. NO CLAIM, SUIT OR ACTION SHALL BE BROUGHT AGAINST TI MORE THAN TWELVE (12) MONTHS AFTER THE EVENT THAT GAVE RISE TO THE CAUSE OF ACTION HAS OCCURRED.

   8.2 *Specific Limitations.* IN NO EVENT SHALL TI'S AGGREGATE LIABILITY FROM ANY USE OF AN EVM PROVIDED HEREUNDER, INCLUDING FROM ANY WARRANTY, INDEMITY OR OTHER OBLIGATION ARISING OUT OF OR IN CONNECTION WITH THESE TERMS, , EXCEED THE TOTAL AMOUNT PAID TO TI BY USER FOR THE PARTICULAR EVM(S) AT ISSUE DURING THE PRIOR TWELVE (12) MONTHS WITH RESPECT TO WHICH LOSSES OR DAMAGES ARE CLAIMED. THE EXISTENCE OF MORE THAN ONE CLAIM SHALL NOT ENLARGE OR EXTEND THIS LIMIT.

9. *Return Policy.* Except as otherwise provided, TI does not offer any refunds, returns, or exchanges. Furthermore, no return of EVM(s) will be accepted if the package has been opened and no return of the EVM(s) will be accepted if they are damaged or otherwise not in a resalable condition. If User feels it has been incorrectly charged for the EVM(s) it ordered or that delivery violates the applicable order, User should contact TI. All refunds will be made in full within thirty (30) working days from the return of the components(s), excluding any postage or packaging costs.

10. *Governing Law:* These terms and conditions shall be governed by and interpreted in accordance with the laws of the State of Texas, without reference to conflict-of-laws principles. User agrees that non-exclusive jurisdiction for any dispute arising out of or relating to these terms and conditions lies within courts located in the State of Texas and consents to venue in Dallas County, Texas. Notwithstanding the foregoing, any judgment may be enforced in any United States or foreign court, and TI may seek injunctive relief in any United States or foreign court.

Mailing Address: Texas Instruments, Post Office Box 655303, Dallas, Texas 75265
Copyright © 2023, Texas Instruments Incorporated

IMPORTANT NOTICE AND DISCLAIMER

TI PROVIDES TECHNICAL AND RELIABILITY DATA (INCLUDING DATASHEETS), DESIGN RESOURCES (INCLUDING REFERENCE DESIGNS), APPLICATION OR OTHER DESIGN ADVICE, WEB TOOLS, SAFETY INFORMATION, AND OTHER RESOURCES “AS IS” AND WITH ALL FAULTS, AND DISCLAIMS ALL WARRANTIES, EXPRESS AND IMPLIED, INCLUDING WITHOUT LIMITATION ANY IMPLIED WARRANTIES OF MERCHANTABILITY, FITNESS FOR A PARTICULAR PURPOSE OR NON-INFRINGEMENT OF THIRD PARTY INTELLECTUAL PROPERTY RIGHTS.

These resources are intended for skilled developers designing with TI products. You are solely responsible for (1) selecting the appropriate TI products for your application, (2) designing, validating and testing your application, and (3) ensuring your application meets applicable standards, and any other safety, security, regulatory or other requirements.

These resources are subject to change without notice. TI grants you permission to use these resources only for development of an application that uses the TI products described in the resource. Other reproduction and display of these resources is prohibited. No license is granted to any other TI intellectual property right or to any third party intellectual property right. TI disclaims responsibility for, and you fully indemnify TI and its representatives against any claims, damages, costs, losses, and liabilities arising out of your use of these resources.

TI’s products are provided subject to TI’s Terms of Sale, TI’s General Quality Guidelines, or other applicable terms available either on ti.com or provided in conjunction with such TI products. TI’s provision of these resources does not expand or otherwise alter TI’s applicable warranties or warranty disclaimers for TI products. Unless TI explicitly designates a product as custom or customer-specified, TI products are standard, catalog, general purpose devices.

TI objects to and rejects any additional or different terms you may propose.

Copyright © 2026, Texas Instruments Incorporated

Last updated 10/2025