LP5891-Q1 Automotive 48 Current Sources, 32 Scans, Common Cathode LED Matrix Driver

1 Features

- AEC-Q100-qualified for automotive applications:
  - Temperature grade 1: –40°C to +125°C, T_A
- Separated V_{CC} and $V_{R/G/B}$ power supply
  - V_{CC} voltage range: 2.5V – 5.5V
  - $V_{R/G/B}$ voltage range: 2.5V – 5.5V
- 48 current source channels from 0.2mA to 40mA
  - Channel-to-channel accuracy: ±0.5% (typ.), ±3% (max.); device-to-device accuracy: ±0.5% (typ.), ±2.5% (max.)
  - Low knee voltage: 0.27V (max.) when I_{OUT} = 5mA
  - 3-bits (8 steps) global brightness control
  - 8-bits (256 steps) color brightness control
  - Maximum 16-bits (65536 steps) PWM grayscale control
- 16 scan line switches with 190mΩ $R_{DS(ON)}$
- Ultra-low power consumption
  - Independent V_{CC} down to 2.5V
  - Lowest I_{CC} down to 3.6mA with 50MHz GCLK
  - Intelligent power saving mode with I_{CC} down to 0.9mA
- Built-in SRAM to support 1–64 multiplexing
  - Single device to support 48 × 16 LEDs or 16 × 16 RGB pixels
  - Dual devices stackable to support 96 × 32 LEDs or 32 × 32 RGB pixels
- High speed and low EMI Continuous Clock Series Interface (CCSI)
  - Only three wires: SCLK / SIN / SOUT
  - External 50MHz (max.) SCLK with rising-edge transmission mechanism
  - Internal frequency multiplier to support high frequency GCLK
- Optimized performances for LED matrix displays
  - Upside and downside ghosting removal
  - Low grayscale enhancement
  - LED open, weak-short, short detection and removal

2 Applications

- Automotive interior light
- Automotive rear light
- Automotive front light
- Automotive local dimming backlight

3 Description

The LP5891-Q1 is a highly integrated common cathode matrix LED display driver with 48 constant current sources and 16 scanning FETs. One LP5891-Q1 supports to drive 16 × 16 RGB pixels and two LP5891-Q1 devices support to drive 32 × 32 RGB pixels. To achieve low power consumption, the device supports separated power supplies for the red, green, and blue LEDs by the common cathode structure. The operation power of the LP5891-Q1 is significantly reduced by ultra-low operation voltage range (Vcc down to 2.5V) and ultra-low operation current (Icc down to 3.6mA).

The LP5891-Q1 implements a high speed rising-edge transmission interface to support high device count daisy-chained and high refresh rate while minimizing electrical-magnetic interference (EMI). The device supports up to 50MHz SCLK (external) and up to 160MHz GCLK (internal). Meanwhile, the device integrates enhanced circuits and intelligent algorithms to solve the various display challenges in Narrow Pixel Pitch (NPP) LED display applications and mini and micro-LED products: dim at the first scan line, upper and downside ghosting, non-uniformity in low grayscale, coupling, caterpillar caused by open or short LEDs, which makes the LP5891-Q1 an excellent choice in such applications.

The LP5891-Q1 also implements LED open/weak short/short detections and removals during operations and can also report those information out to the accompanying digital processor.

Device Package Information

PART NUMBER	PACKAGE(1)	PACKAGE SIZE(2)
LP5891-Q1	VQFN(76)	9.00mm × 9.00mm
	VQFN(76) Wettable flank	9.00mm × 9.00mm

(1) For all available packages, see the orderable addendum at the end of the datasheet.
(2) The package size (length × width) is a nominal value and includes pins, where applicable.

An IMPORTANT NOTICE at the end of this data sheet addresses availability, warranty, changes, use in safety-critical applications, intellectual property matters and other important disclaimers. PRODUCTION DATA.

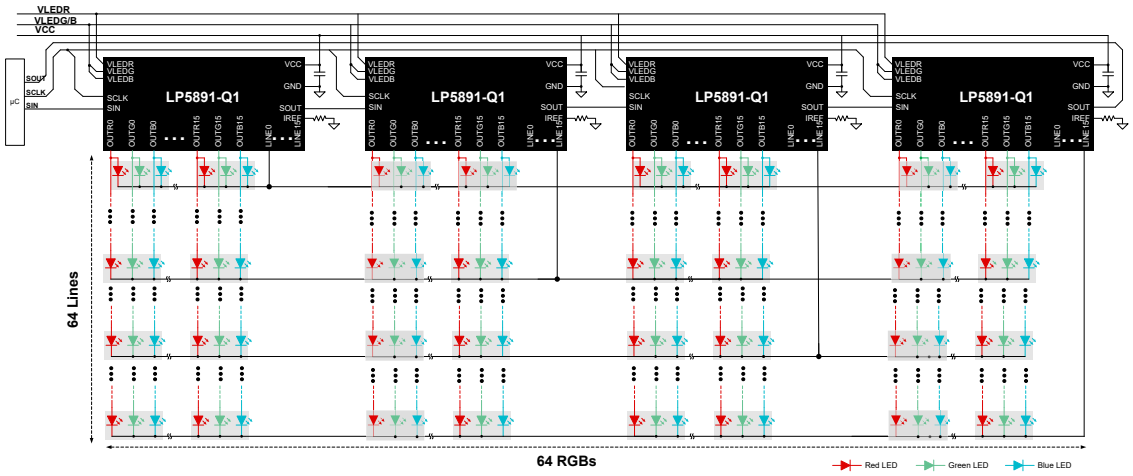

LP5891-Q1 with Four Devices Stackable Connection

Copyright © 2026 Texas Instruments Incorporated

Table of Contents

1 Features....1
2 Applications....1
3 Description....1
4 Revision History....3
5 Description (continued)....3
6 Pin Configuration and Functions....4
7 Specifications....5
7.1 Absolute Maximum Ratings....5
7.2 ESD Ratings....5
7.3 Recommended Operating Conditions....5
7.4 Thermal Information....5
7.5 Electrical Characteristics....6
7.6 Timing Requirements....9
7.7 Switching Characteristics....9
7.8 Typical Characteristics....10
8 Detailed Description....12
8.1 Overview....12
8.2 Functional Block Diagram....12
8.3 Feature Description....13
8.4 Device Functional Modes....25
8.5 Continuous Clock Series Interface....25
8.6 PWM Grayscale Control....31
8.7 Register Maps....35
9 Application and Implementation....48
9.1 Application Information....48
9.2 Typical Application....49
9.3 Power Supply Recommendations....55
9.4 Layout....56
10 Device and Documentation Support....62
10.1 Documentation Support....62
10.2 Receiving Notification of Documentation Updates....62
10.3 Support Resources....62
10.4 Trademarks....62
10.5 Electrostatic Discharge Caution....62
10.6 Glossary....62
11 Mechanical, Packaging, and Orderable Information....63

4 Revision History

NOTE: Page numbers for previous revisions may differ from page numbers in the current version.

Changes from Revision * (August 2022) to Revision A (December 2022)	Page
• Changed device status from *Advance Information* to *Production Data*	1

5 Description (continued)

The LP5891-Q1 is a highly integrated common cathode matrix LED display driver with 48 constant current sources and 16 scanning FETs. Besides driving 16 × 16 and 32 × 32 RGB LED pixels as LP5890, three LP5891-Q1 devices are capable of driving 48 × 48 RGB LED pixels and stacking four LP5891-Q1 devices can drive 64 × 64 RGB LED pixels. To achieve low power consumption, the device supports separated power supplies for the red, green, and blue LEDs by its common cathode structure. Furthermore, the operation power of the LP5891-Q1 is significantly reduced by ultra-low operation voltage range (Vcc down to 2.5 V) and ultra-low operation current (Icc down to 3.6 mA).

The LP5891-Q1 implements a high speed rising-edge transmission interface to support high device count daisy-chained and high refresh rate while minimizing electrical-magnetic interference (EMI). The device supports up to 50-MHz SCLK (external) and up to 160-MHz GCLK (internal). Meanwhile, the device integrates enhanced circuits and intelligent algorithms to solve the various display challenges in Narrow Pixel Pitch (NPP) LED display applications and mini and micro-LED products: dim at the first scan line, upper and downside ghosting, non-uniformity in low grayscale, coupling, caterpillar caused by open or short LEDs, which make the LP5891-Q1 a perfect choice in such applications.

The LP5891-Q1 also implements LED open/weak short/short detections and removals during operations and can also report those information out to the accompanying digital processor.

Copyright © 2026 Texas Instruments Incorporated

6 Pin Configuration and Functions

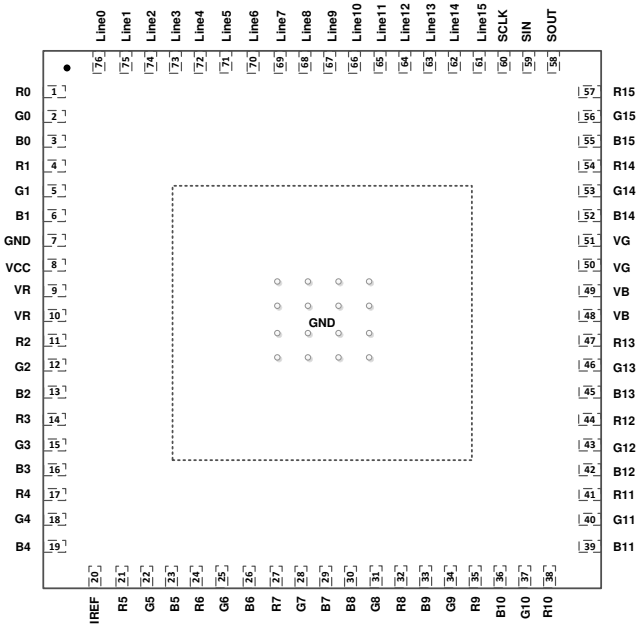

Figure 6-1. LP5891-Q1 RRF Package,76-Pin VQFN With Exposed Thermal Pad(Top View)

Table 6-1. Pin Functions

PIN		I/O	DESCRIPTION
NAME	RRF NO.		
IREF	20	I	Pin for setting the maximum constant-current value. Connecting an external resistor between IREF and GND sets the maximum current for each constant-current output channel. When this pin is connected directly to GND, all outputs are forced off. The external resistor must be placed close to the device.
VCC	8	I	Device power supply
VR	9, 10	I	Red LED power supply
VG	51, 50	I	Green LED power supply
VB	49, 48	I	Blue LED power supply
R0-R15	1, 4, 11, 14, 17, 21, 24, 27, 32, 35, 38, 41, 44, 47, 54, 57	O	Red LED constant-current output
G0-G15	2, 5, 12, 15, 18, 22, 25, 28, 31, 34, 37, 40, 43, 46, 53, 56	O	Green LED constant-current output
B0-B15	3, 6, 13, 16, 19, 23, 26, 29, 30, 33, 36, 39, 42, 45, 52, 55	O	Blue LED constant-current output
LINE0-LINE15	76, 75, 74, 73, 72, 71, 70, 69, 68, 67, 66, 65, 64, 63, 62, 61	O	Scan lines
SCLK	60	I	Clock-signal input pin
SIN	59	I	Serial-data input pin
SOUT	58	O	Serial data output pin
GND	7	—	Power-ground reference
Thermal pad	—	—	The thermal pad and the GND pin must be connected together on the board.

Copyright © 2026 Texas Instruments Incorporated

7 Specifications

7.1 Absolute Maximum Ratings

over operating free-air temperature range (unless otherwise noted)[1]

		MIN	MAX	UNIT
Voltage	V_{CC}	–0.3	6	V
	$V_{R/G/B}$	–0.3	6	V
	IREF, SCLK, SIN, SOUT	–0.3	6	V
	RX/GX/BX	–0.3	6	V
	LINE0 to LINE15	–0.3	6	V
Operating junction temperature, T_J		–40	150	°C
Storage temperature, T_{stg}		–55	150	°C

(1) Operation outside the *Absolute Maximum Ratings* may cause permanent device damage. *Absolute Maximum Ratings* do not imply functional operation of the device at these or any other conditions beyond those listed under *Recommended Operating Conditions*. If used outside the *Recommended Operating Conditions* but within the *Absolute Maximum Ratings*, the device may not be fully functional, and this may affect device reliability, functionality, performance, and shorten the device lifetime.

7.2 ESD Ratings

		VALUE	UNIT
$V_{(ESD)}$ Electrostatic discharge	Human body model (HBM), per AEC Q100-002[1] HBM ESD classification level 3A	±4000	V
	Charged-device model (CDM), per AEC Q100-011 CDM ESD classification level C6	±1000	

(1) AEC Q100-002 indicates that HBM stressing shall be in accordance with the ANSI/ESDA/JEDEC JS-001 specification.

7.3 Recommended Operating Conditions

over operating free-air temperature range (unless otherwise noted)

		MIN	NOM	MAX	UNIT
VCC	Device supply voltage	2.5		5.5	V
VLEDR/G/B	LED supply voltage	2.5		5.5	V
V_{IH}	High level logic input voltage (SCLK, SIN)	0.7 × VCC			V
V_{IL}	Low level logic input voltage (SCLK, SIN)			0.3 × VCC	V
I_{OH}	High level logic output current (SOUT)			–2	mA
I_{OL}	Low level logic output current (SOUT)			2	mA
I_{CH}	Constant output source current	0.2		40	mA
I_{LINE}	Line scan switch load current	0		2	A
T_A	Ambient operating temperature	–40		125	°C

7.4 Thermal Information

THERMAL METRIC[1]		LP5891-Q1 RRF (VQFN) 76 PINS	UNIT
$R_{\theta JA}$	Junction-to-ambient thermal resistance	22.2	°C/W
$R_{\theta JC(top)}$	Junction-to-case (top) thermal resistance	10.7	°C/W
$R_{\theta JB}$	Junction-to-board thermal resistance	7.2	°C/W
ψ_{JT}	Junction-to-top characterization parameter	0.1	°C/W
ψ_{JB}	Junction-to-board characterization parameter	7.1	°C/W

Copyright © 2026 Texas Instruments Incorporated

7.4 Thermal Information (continued)

THERMAL METRIC[1]		LP5891-Q1 RRF (VQFN) 76 PINS	UNIT
$R_{\theta JC(bot)}$	Junction-to-case (bottom) thermal resistance	1.7	°C/W

(1) For more information about traditional and new thermal metrics, see the *Semiconductor and IC Package Thermal Metrics* application report.

7.5 Electrical Characteristics

At V_{CC} = V_R = 2.8V, $V_{G/B}$ = 3.8V, T_A = –40°C to +125°C; Typical values are at T_A = 25°C (unless otherwise specified)

PARAMETER		TEST CONDITIONS	MIN	TYP	MAX	UNIT
V_{CC}	Device supply voltage	I_{CH} <=20mA	2.5		5.5	V
		I_{CH} >=20mA	3.5		5.5	
V_{UVR}	Undervoltage restart	VCC rising			2.3	V
V_{UVF}	Undervoltage shutdown	VCC falling	2.0			V
$V_{UV(HYS)}$	Undervoltage shutdown hysteresis			0.1		V
I_{CC}	Device supply current	SCLK/SIN = 10MHz, MPSM_EN=1bit, Matrix PSM enable, internal GCLK off, GSn = 0000h, BC = 2h, CCR/G/B = 63h, PS_EN= 1h, VOUTn = floating, R_{IREF} = 7.8kΩ (In intelligent power save mode)		0.9		mA
		SCLK/SIN = 10MHz, Standby enable, internal GCLK off, GSn = 0000h, BC = 2h, CCR/G/B = 63h, PS_EN= 1h, VOUTn = floating, R_{IREF} = 7.8kΩ (In intelligent power save mode)		0.9		mA
		SCLK/SIN = 10MHz, PSP_MOD=1bit, internal GCLK=50MHz, GSn = 0000h, BC = 2h, CCR/G/B = 63h, PS_EN= 1h, VOUTn = floating, R_{IREF} = 7.8kΩ (In power save mode)		3.6		mA
		SCLK = 10MHz, internal GCLK = 50 MHz, GSn = 1FFFh, BC = 2h, CCR/G/B = 63h,VOUTn = floating, R_{IREF} = 7.8kΩ, I_{CH} = 2mA		3.6		mA
		SCLK = 10MHz, internal GCLK = 100 MHz, GSn = 1FFFh, BC = 2h, CCR/G/B = 63h, VOUTn = floating, R_{IREF} = 7.8kΩ, I_{CH} = 2mA		4.9		mA
$V_{R/G/B}$	LED supply voltage		2.5		5.5	V
V_{IH}	High level input voltage (SCLK, SIN)		0.7 × VCC			V
V_{IL}	Low level input voltage (SCLK, SIN)				0.3 × VCC	V
V_{OH}	High level output voltage (SOUT)	IOH = –2mA at SOUT	VCC-0.4		VCC	V
V_{OL}	Low level output voltage (SOUT)	IOL = 2mA at SOUT			0.4	V
I_{LOGIC}	Logic pin current (SCLK, SIN)	SCLK/SIN = VCC or GND	-1		1	uA
$R_{DS(ON)}$	Scan switches' on-state resistance (LINE0 to LINE15)	VCC = 2.8V, T_A= 25°C		190		mΩ
V_{IREF}	Reference voltage	SCLK/SIN = GND, internal GCLK= 0MHz, GSn = 0000h, BC = 2h, CCR/G/B = 63h, VOUTn = floating, R_{IREF} = 7.8kΩ		0.8		V

Copyright © 2026 Texas Instruments Incorporated

7.5 Electrical Characteristics (continued)

At V_{CC} = V_R = 2.8V, $V_{G/B}$ = 3.8V, T_A = –40°C to +125°C; Typical values are at T_A = 25°C (unless otherwise specified)

PARAMETER		TEST CONDITIONS	MIN	TYP	MAX	UNIT
V_{KNEE}	Channel knee voltage (R0-R15 / G0-G15 / B0-B15)	VLEDR/G/B =2.5V, all channel outputs on, output current at 1mA			0.25	V
		VLEDR/G/B =2.5V, all channel outputs on, output current at 5mA			0.27	V
		VLEDR/G/B =2.5V, all channel outputs on, output current at 10mA			0.31	V
		VLEDR/G/B =2.5V, IMAX = 1b, all channel outputs on, output current at 15mA			0.37	V
		VLEDR/G/B =2.5V, IMAX=1b, all channel outputs on, output current at 20mA			0.41	V
		VCC = 3.5V, IMAX=1b, all channel outputs on, output current at 25mA			0.45	V
		VCC = 3.5V, IMAX=1b, all channel outputs on, output current at 30mA			0.53	V
		VCC = 3.5V, IMAX=1b, all channel outputs on, output current at 35mA			0.62	V
		VCC = 3.5V, IMAX=1b, all channel outputs on, output current at 40mA			0.71	V
$I_{CH(LKG)}$	Channel leakage current (R0-R15 / G0-G15 / B0-B15)	Channel voltage at 0V			1	uA
$\Delta I_{ERR(CC)}$	Constant-current channel to channel deviation (R0-R15 / G0-G15 / B0-B15) (1)	All CHn = on, BC = 00h, CC = 31h, VOUTn = (VLED-1)V, R_{IREF} = 19.05kΩ (I_{CH} = 0.2mA target), T_A = 25°C, includes the V_{IREF} tolerance, at same color grouped outputs of R0-R15 / G0-G15 / B0-B15		±1	±2.5	%
		All CHn = on, BC = 00h, CC = 7Dh, VOUTn = (VLED-1)V, R_{IREF} = 19.05kΩ (I_{CH} = 0.5mA target), T_A = 25°C, includes the V_{IREF} tolerance, at same color grouped outputs of R0-R15 / G0-G15 / B0-B15		±0.5	±1.5	%
		All CHn = on, BC = 00h, CC = FBh, VOUTn = (VLED-1)V, R_{IREF} = 19.05kΩ (I_{CH} = 1mA target), T_A = 25°C, includes the V_{IREF} tolerance, at same color grouped outputs of R0-R15 / G0-G15 / B0-B15		±0.5	±1.5	%
		All CHn = on, BC = 2h, CC = FBh, VOUTn = (VLED-1)V, R_{IREF} = 7.8kΩ (I_{CH} = 5mA target), T_A = 25°C, includes the V_{IREF} tolerance, at same color grouped outputs of R0-R15 / G0-G15 / B0-B15		±0.5	±2.5	%
		All CHn = on, BC = 6h, CC = A7h, VOUTn = (VLED-1)V, R_{IREF} = 7.8kΩ (I_{CH} = 10mA target), T_A = 25°C, includes the V_{IREF} tolerance, at same color grouped outputs of R0-R15 / G0-G15 / B0-B15		±0.5	±2.5	%
		All CHn = on, BC = 7h, CC = FBh, IMAX=1b, VOUTn = (VLED-1)V, R_{IREF} = 6.8kΩ (I_{CH} = 20mA target), T_A = 25°C, includes the V_{IREF} tolerance, at same color grouped outputs of R0-R15 / G0-G15 / B0-B15		±0.5	±2.7	%
		All CHn = on, BC = 7h, CC = FDh, IMAX=1b, VOUTn = (VLED-1)V, VCC=3.5V, R_{IREF} = 5.49kΩ (I_{CH} = 25mA target), T_A = 25°C, includes the V_{IREF} tolerance, at same color grouped outputs of R0-R15 / G0-G15 / B0-B15		±0.5	±3	%
		All CHn = on, BC = 7h, CC = FAh, IMAX=1b, VOUTn = (VLED-1)V, VCC=3.5V, R_{IREF} = 4.53kΩ (I_{CH} = 30-mA target), T_A = 25°C, includes the V_{IREF} tolerance, at same color grouped outputs of R0-R15 / G0-G15 / B0-B15		±0.5	±3	%
		All CHn = on, BC = 7h, CC = FCh, IMAX=1b, VOUTn = (VLED-1)V, VCC=3.5V, R_{IREF} = 3.92kΩ (I_{CH} = 35mA target), T_A = 25°C, includes the V_{IREF} tolerance, at same color grouped outputs of R0-R15 / G0-G15 / B0-B15		±0.5	±3	%
		All CHn = on, BC = 7h, CC = FAh, IMAX=1b, VOUTn = (VLED-1)V, VCC=3.5V, R_{IREF} = 3.4kΩ (I_{CH} = 40mA target), T_A = 25°C, includes the V_{IREF} tolerance, at same color grouped outputs of R0-R15 / G0-G15 / B0-B15		±0.5	±3	%

Copyright © 2026 Texas Instruments Incorporated

7.5 Electrical Characteristics (continued)

At V_{CC} = V_R = 2.8V, $V_{G/B}$ = 3.8V, T_A = –40°C to +125°C; Typical values are at T_A = 25°C (unless otherwise specified)

PARAMETER		TEST CONDITIONS	MIN	TYP	MAX	UNIT
$\Delta I_{ERR(DD)}$	Constant-current device to device deviation (R0-R15 / G0-G15 / B0-B15) (2)	All CHn = on, BC = 00h, CC = 31h, VOUTn = (VLED-1)V, R_{IREF} = 19.05kΩ (I_{CH} = 0.2mA target), T_A = 25°C, includes the V_{IREF} tolerance, at same color grouped outputs of R0-R15 / G0-G15 / B0-B15		±1	±2.5	%
		All CHn = on, BC = 00h, CC = 7Dh, VOUTn = (VLED-1)V, R_{IREF} = 19.05kΩ (I_{CH} = 0.5mA target), T_A = 25°C, includes the V_{IREF} tolerance, at same color grouped outputs of R0-R15 / G0-G15 / B0-B15		±0.5	±2	%
		All CHn = on, BC = 00h, CC = FBh, VOUTn = (VLED-1)V, R_{IREF} = 19.05kΩ (I_{CH} = 1mA target), T_A = 25°C, includes the V_{IREF} tolerance, at same color grouped outputs of R0-R15 / G0-G15 / B0-B15		±0.5	±1.5	%
		All CHn = on, BC = 2h, CC = FBh, VOUTn = (VLED-1)V, R_{IREF} = 7.8kΩ (I_{CH} = 5mA target), T_A = 25°C, includes the V_{IREF} tolerance, at same color grouped outputs of R0-R15 / G0-G15 / B0-B15		±0.5	±2	%
		All CHn = on, BC = 6h, CC = A7h, VOUTn = (VLED-1)V, R_{IREF} = 7.8kΩ (I_{CH} = 10mA target), T_A = 25°C, includes the V_{IREF} tolerance, at same color grouped outputs of R0-R15 / G0-G15 / B0-B15		±0.5	±2	%
		All CHn = on, BC = 7h, CC = FBh, IMAX=1b, VOUTn = (VLED-1)V, R_{IREF} = 6.8kΩ (I_{CH} = 20mA target), T_A = 25°C, includes the V_{IREF} tolerance, at same color grouped outputs of R0-R15 / G0-G15 / B0-B15		±0.5	±2	%
		All CHn = on, BC = 7h, CC = FDh, IMAX=1b, VOUTn = (VLED-1)V, VCC=3.5V, R_{IREF} = 5.49kΩ (I_{CH} = 25mA target), T_A = 25°C, includes the V_{IREF} tolerance, at same color grouped outputs of R0-R15 / G0-G15 / B0-B15		±0.5	±2.5	%
		All CHn = on, BC = 7h, CC = FAh, IMAX=1b, VOUTn = (VLED-1)V, VCC=3.5V, R_{IREF} = 4.53kΩ (I_{CH} = 30mA target), T_A = 25°C, includes the V_{IREF} tolerance, at same color grouped outputs of R0-R15 / G0-G15 / B0-B15		±0.5	±2.5	%
		All CHn = on, BC = 7h, CC = FCh, IMAX=1b, VOUTn = (VLED-1)V, VCC=3.5V, R_{IREF} = 3.92kΩ (I_{CH} = 35mA target), T_A = 25°C, includes the V_{IREF} tolerance, at same color grouped outputs of R0-R15 / G0-G15 / B0-B15		±0.5	±2.5	%
		All CHn = on, BC = 7h, CC = FAh, IMAX=1b, VOUTn = (VLED-1)V, VCC=3.5V, R_{IREF} = 3.4kΩ (I_{CH} = 40mA target), T_A = 25°C, includes the V_{IREF} tolerance, at same color grouped outputs of R0-R15 / G0-G15 / B0-B15		±0.5	±2.5	%
$\Delta I_{REG(LINE)}$	Line regulation (R0-R15 / G0-G15 / B0-B15)(3)	VLED = 2.5 to 5.5V, All CHn = on, VOUTn = (VLED-1)V, at same color grouped outputs of R0-R15 / G0-G15 / B0-B15			±1	%/V
$\Delta I_{REG(LOAD)}$	Load regulation (R0-R15 / G0-G15 / B0-B15) (4)	VOUTn = (VLED-1)V to (VLED-3)V, VR=VG/B=VLED=3.8V, All CHn = on, at same color grouped outputs of R0-R15 / G0-G15 / B0-B15			±1	%/V
T_{TSD}	Thermal shutdown threshold			170		°C
T_{HYS}	Thermal shutdown hysteresis			15		°C

(1) The deviation of each output in same color group (OUTR0-15 or OUTG0-15 or OUTB0-15) from the average of same color group constant current. The deviation is calculated by the formula. (X = R or G or B, n = 0-15)

$$\Delta(\%) = \left[\frac{I_{Xn}}{\frac{I_{X0} + I_{X1} + \cdots + I_{X14} + I_{X15}}{16}} - 1\right] \times 100$$

(2) The deviation of the average of constant-current in each color group from the ideal constant-current value. (X = R or G or B) :

$$\Delta(\%) = \left[\frac{\frac{I_{X0} + I_{X1} + \cdots + I_{X14} + I_{X15}}{16} - \text{Ideal Output Current}}{\text{Ideal Output Current}}\right] \times 100$$

Ideal current is calculated by the following equation:

$$I_{IDEAL_R(or\ G\ or\ B)} = \frac{V_{IREF}}{R_{IREF}} \times GAIN_{(BC)} \times \frac{1 + CC_R(or\ CC_G\ or\ CC_B)}{256}$$

Copyright © 2026 Texas Instruments Incorporated

(3) Line regulation is calculated by the following equation. (X = R or G or B, n = 0-15):

$$\Delta\,(\%V) = \left[\frac{(I_{Xn}\,at\,V_{LED} = 5.5\,V) - (I_{Xn}\,at\,V_{LED} = 2.5\,V)}{(I_{Xn}\,at\,V_{LED} = 2.5\,V)}\right] \times \frac{100}{5.5\,V - 2.5\,V}$$

(4) Load regulation is calculated by the following equation. (X = R or G or B, n = 0-15):

$$\Delta\,(\%V) = \left[\frac{(I_{Xn}\,at\,V_{Xn} = 1\,V) - (I_{Xn}\,at\,V_{Xn} = 3\,V)}{(I_{Xn}\,at\,V_{Xn} = 3\,V)}\right] \times \frac{100}{3\,V - 1\,V}$$

7.6 Timing Requirements

At V_{CC} = V_R = 2.8V, $V_{G/B}$ = 3.8V, T_A = –40°C to +125°C; Typical values are at T_A = 25°C (unless otherwise specified)

PARAMETER		TEST CONDITIONS	MIN	TYP	MAX	UNIT
f_{SCLK}	Clock frequency (SCLK)				50	MHz
$t_{w(H0)}$	High level pulse duration (SCLK)		9			ns
$t_{w(L0)}$	Low level pulse duration (SCLK)		9			ns
$t_{su(0)}$	Set-up time	SIN to SCLK↑	10			ns
$t_{h(0)}$	Hold time	SCLK↑ to SIN↑↓	2			ns

7.7 Switching Characteristics

At V_{CC} = V_R = 2.8V, $V_{G/B}$ = 3.8V, T_A = –40°C to +125°C; Typical values are at T_A = 25°C (unless otherwise specified)

PARAMETER		TEST CONDITIONS	MIN	TYP	MAX	UNIT
t_r	Rise time (SOUT)	VCC = 3.3 V, C_{SOUT} = 30pF		2	10	ns
t_f	Fall time (SOUT)	VCC = 3.3 V, C_{SOUT} = 30pF		2	10	ns
$t_{pd(0)}$	Propagation delay	SCLK↑ to SOUT↑↓, full temperature, C_{SOUT} = 30pF	3.5		14.2	ns

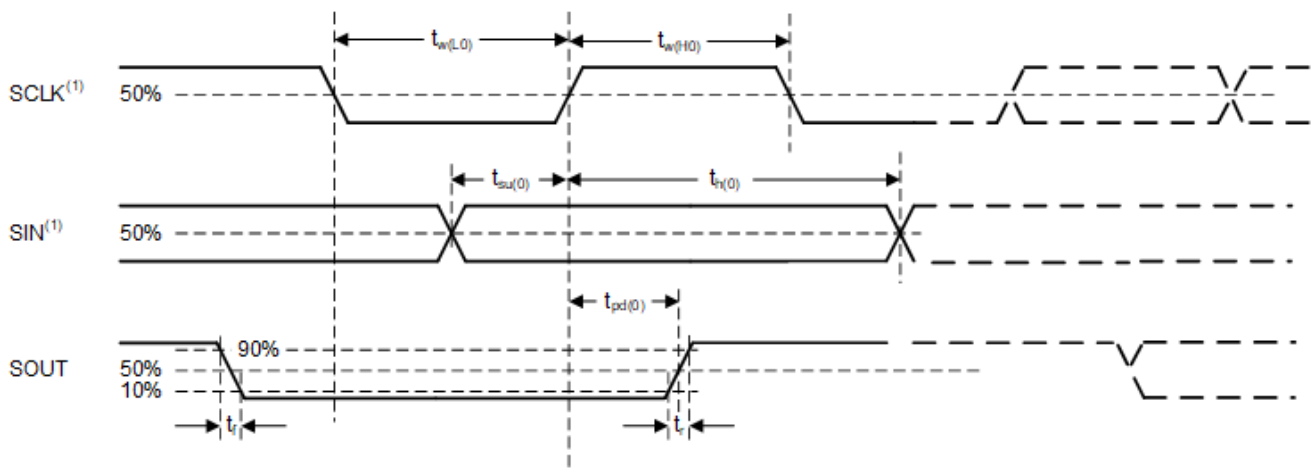

(1). Input pulse rise and fall time is 2 ns typically.

Figure 7-1. Timing and Switching Diagram

7.8 Typical Characteristics

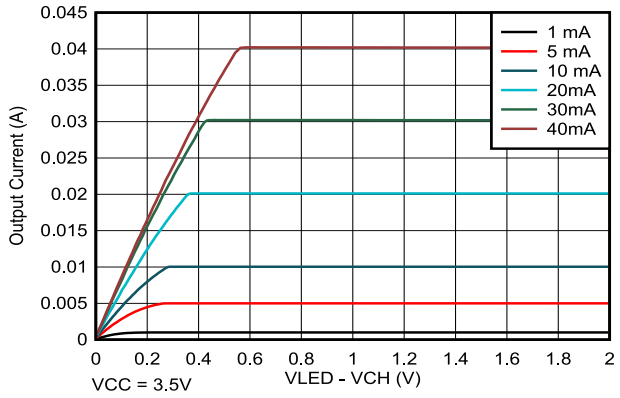

Figure 7-2. Channel Current vs (VLED-Vchannel) Voltage

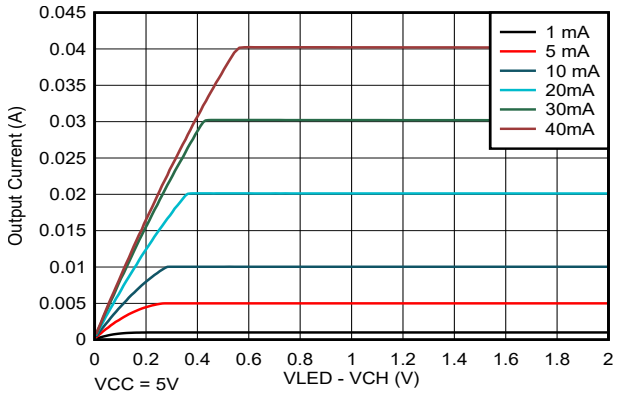

Figure 7-3. Channel Current vs (VLED-Vchannel) Voltage

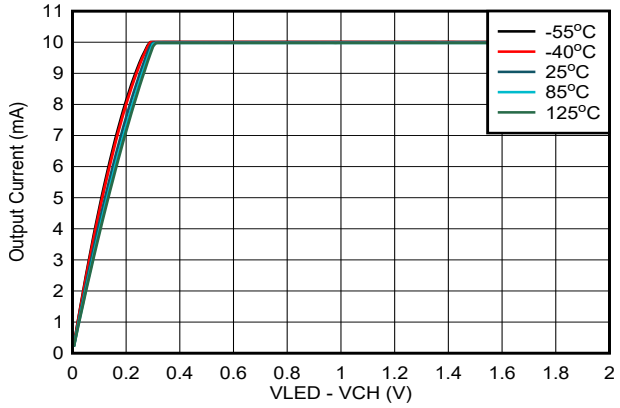

Figure 7-4. Channel Current vs (VLED-Vchannel) Voltage

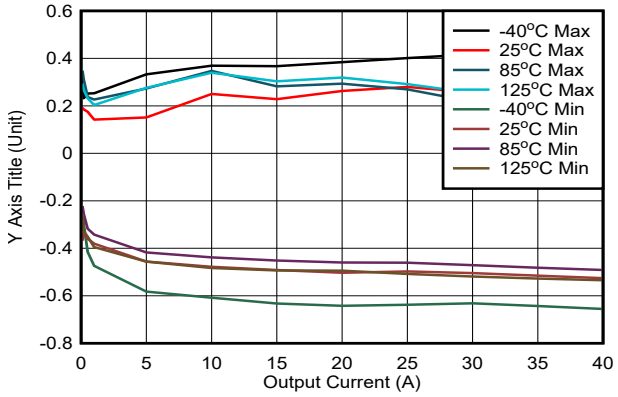

Figure 7-5. Channel to Channel Accuracy vs Output Current

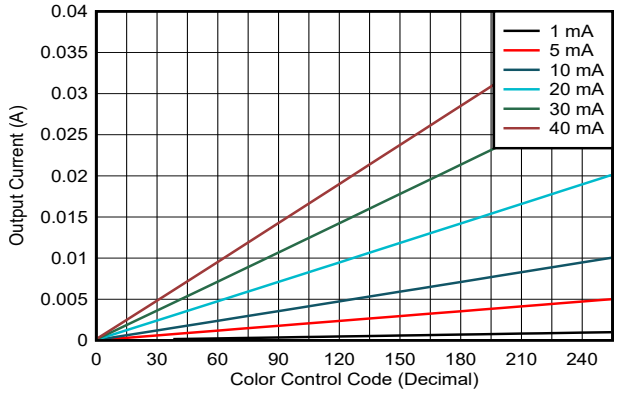

Figure 7-6. Color Control Code vs Output Current

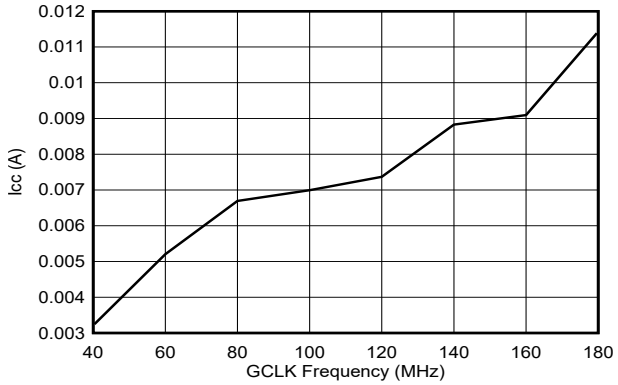

Figure 7-7. Icc Current vs GCLK Frequency

Copyright © 2026 Texas Instruments Incorporated

7.8 Typical Characteristics (continued)

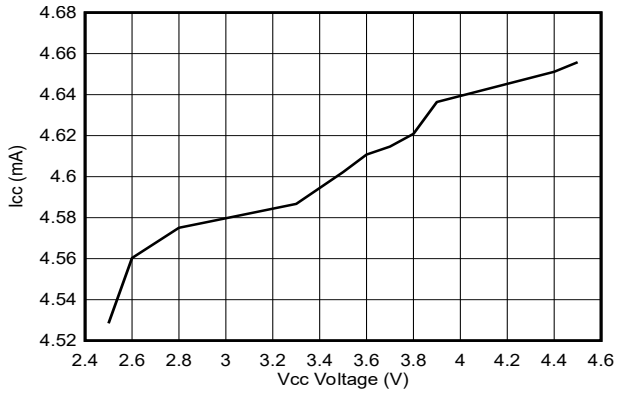

GCLK = 80 MHz

Figure 7-8. Icc Current vs Vcc Voltage

8 Detailed Description

8.1 Overview

The LP5891-Q1 is a highly integrated RGB LED driver with 48 constant current sources and 16 scanning FETs. A single LP5891-Q1 is capable of driving 16 × 16 RGB LED pixels while stacking two LP5891-Q1 devices can drive 32 × 32 RGB LED pixels. To achieve low power consumption, the device supports separated power supplies for the red, green, and blue LEDs by its common cathode structure. Furthermore, the operation power of the LP5891-Q1 is significantly reduced by ultra-low operation voltage range (V_{CC} down to 2.5V) and ultra-low operation current (I_{CC} down to 3.6mA).

The LP5891-Q1 supports 0.2mA to 40mA per channel with typical 0.5% channel-to-channel current deviation and typical 0.5% device-to-device current deviation. The DC current value of all 48 channels is set by an external IREF resistor and can be adjusted by the 8-step global brightness control (BC) and the 256-step per-color group brightness control (CC_R/CC_G/CC_B).

The LP5891-Q1 implements a high speed rising-edge transmission interface to support high device count daisy-chained and high refresh rate while minimizing electrical-magnetic interference (EMI). The LP5891-Q1 supports up to 50MHz SCLK (external) and up to 160MHz GCLK (internal).

The LP5891-Q1 also implements LED open, weak-short, and short detections and can also report this information out to the accompanying digital processor.

8.2 Functional Block Diagram

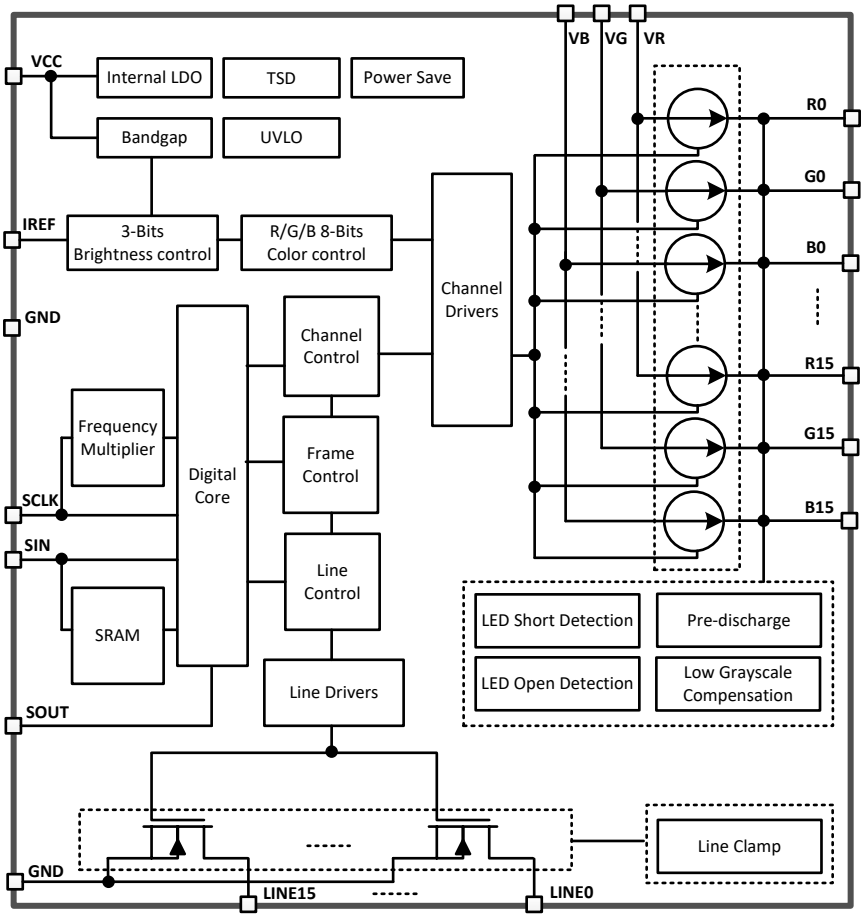

Copyright © 2026 Texas Instruments Incorporated

8.3 Feature Description

8.3.1 Independent and Stackable Mode

The LP5891-Q1 can operate in two different modes: independent or stackable. In independent mode, a single LP5891-Q1 can drive a 16 × 16 RGB LED matrix, while in stackable mode, two LP5891-Q1 devices can be stacked together, which means the line switches of one device can be shared to the others. Stacking two LP5891-Q1 devices can drive a 32 × 32 RGB LED matrix. The mode can be configured by the MOD_SIZE (see FC2 for more details).

8.3.1.1 Independent Mode

Figure 8-1 shows an implementation of a 16 × 32 RGB LED matrix using two LP5891-Q1 devices in independent mode. Each device is responsible for its own 16 × 16 RGB LED matrix, which means that all the data for section A is stored in device 1 and the data for section B is stored in device 2.

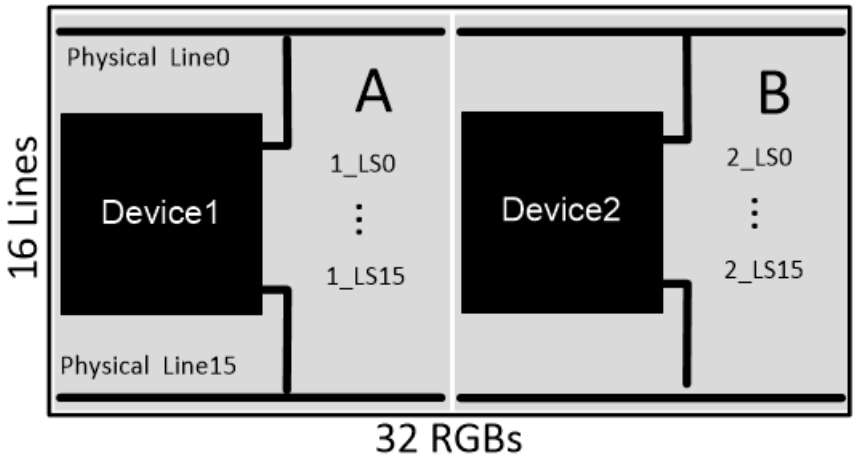

Figure 8-1. Two Devices in Independent Mode

The unused line must be assigned to the last several lines of the device. For example, if there are only 14 scanning lines, then the two unused lines must be assigned to 1_LS14 and 1_LS15.

8.3.1.2 Stackable Mode

While operating the LP5891-Q1 in stackable mode, as shown in below table.

Table 8-1. Stackable Mode

Mode	Matrix Size	Data Sequence	Register Value		Scan Sequence
			FC2 Bit 43	FC4 Bit 14	
Mode1	16x32	D1->D2	0	invalid	D1, D2 independent
Mode2	32x32	D1->D2	1	1	D1 LS0->D1 LS15->D2 LS15->D2 LS0

Figure 8-2 shows the connection between two LP5891-Q1 devices in stackable mode without scan reversed driving 32 × 32 RGB LED pixels. The MOD_SIZE must be configured to 1b and SCAN_REV must be configured to 1b. Device 1 supplies switches for the first 16 scan line and device 2 supplies 16 lines for physical line 17-32. The SCAN_REV configure to 1b which reverses the scan line switching order of the second device, to make sure the scanning sequence is from physical 1st line to 32nd line. Scan sequence is shown in the table. The data for matrix sections A and C store in device 1, while matrix sections B and D data are stored in device 2.

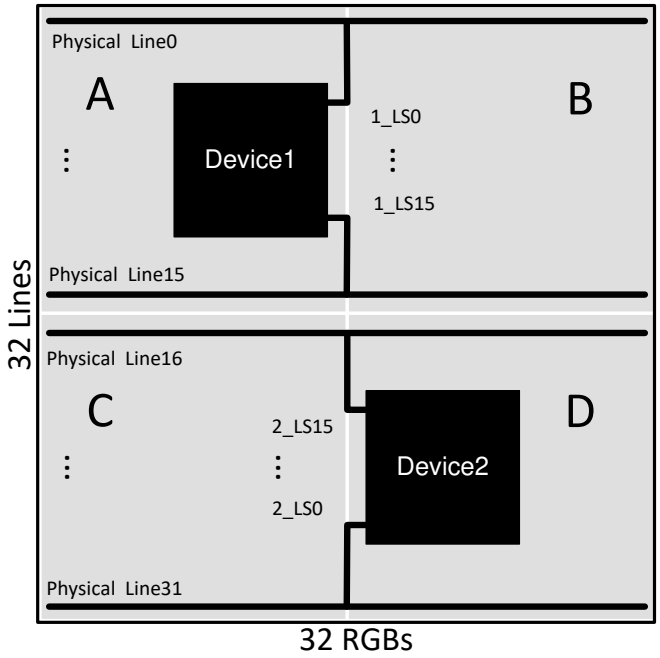

Figure 8-2. Mode2 Diagram

When two LP5891-Q1 devices are used in stackable mode, if there are unused line switches, these unused line switches must be the last line switches of the second device. For example, if there are only 30 scanning lines,

MOD_SIZE = '1'b, SCAN_REV = '1'b, the unused line switches can be below,

- D2_LS0, D2_LS1

MOD_SIZE = '1'b, SCAN_REV = '0'b, the unused line switches can be below,

- D2_LS14, D2_LS15

SCAN_REV = '0'b, the unused line switches can be either of the below,

- 1_LS14, 1_LS15
- 2_LS14, 2_LS15

SCAN_REV = '1'b, the unused line switches can be either of below,

Copyright © 2026 Texas Instruments Incorporated

- 1_LS14, 1_LS15
- 2_LS1, 2_LS0

The unused line switches must be 2_LS14, 2_LS15 if SCAN_REV = '0'b, or 2_LS1, 2_LS0 if SCAN_REV = '1'b.

8.3.2 Current Setting

8.3.2.1 Brightness Control (BC) Function

The LP5891-Q1 device is able to adjust the output current of all constant-current outputs simultaneously. This function is called global brightness control (BC). The global BC for all outputs is programmed with a 3-bit register, thus all output currents can be adjusted in eight steps for a given current-programming resistor, R_{IREF}. When the 3-bit BC register changes, the gain of output current, $GAIN_{BC}$ changes as Table 8-2 below.

Table 8-2. Current Gain Versus BC Code

BC Register (BC)	Current Gain ($GAIN_{BC}$)
000b	24.17
001b	30.57
010b	49.49
011b (default)	86.61
100b	103.94
101b	129.92
110b	148.48
111b	173.23

The maximum output current per channel, I_{OUTSET}, is determined by resistor R_{IREF}, and the $GAIN_{BC}$. The voltage on IREF is typically 0.8 V. R_{IREF} can be calculated by Equation 1 below. For noise immunity purpose, suggest R_{IREF} < 40 kΩ.

$$R_{IREF}(k\Omega) = \frac{V_{IREF}(V)}{I_{IREF}(mA)} = \frac{V_{IREF}(V)}{I_{OUTSET}(mA)} \times GAIN_{(BC)} \tag{1}$$

8.3.2.2 Color Brightness Control (CC) Function

The LP5891-Q1 device is able to adjust the output current of each of the three color groups R0-R15, G0G15, and B0B15 separately. This function is called color brightness control (CC). For each color, there is a 8-bit data register, CC_R, CC_G, or CC_B. Thus, all color group output currents can be adjusted in 256 steps from 0% to 100% of the maximum output current, I_{OUTSET}. The output current of each color, $I_{OUT_R\ (or\ G\ or\ B)}$ can be calculated by Equation 2 below.

$$I_{OUT_R(or\ G\ or\ B)} = I_{OUTSET} \times \frac{1 + CC_R(or\ CC_G\ or\ CC_B)}{256} \tag{2}$$

Table 8-3 shows the CC data versus the constant-current against I_{OUTSET}:

Table 8-3. CC Data vs Current Ratio

CC Register (CC_R or CC_G or CC_B)	Ratio of I_{OUTSET}	
0000 0000b	1/256	0.39%
0000 0001b	2/256	0.78%
...	...	...
0111 1111b (default)	128/256	50%
...	...	...
1111 1110b	255/256	99.61%
1111 1111b	256/256	100%

8.3.2.3 Choosing BC/CC for a Different Application

BC is mainly used for global brightness adjustment to adapt to ambient brightness, such as between day and night, indoor and outdoor.

Copyright © 2026 Texas Instruments Incorporated

- Suggested BC is 3h or 4h, which is in the middle of the range, allowing flexible changes in brightness up and down.
- If the current of one color group (typically R LEDs) is close to the output maximum current (40mA), to prevent the constant output current from exceeding the upper limit in case a larger BC code is input accidentally, choose the maximum BC value, 7h.
- If the current of one color group (typically B LEDs) is close to the output minimum current (0.2mA), to prevent the constant output current from exceeding the lower limit in case a lower BC code is input accidentally, choose the minimum BC code, 0h.

CC can be used to fine tune the brightness in 256 steps. This is designed for white balance adjustment between RGB color group. To get a pure white color, the general requirement for the luminous intensity ratio of R, G, B LED is 5:3:2. Depending on the characteristics of the LED (Electro-Optical conversion efficiency), the current ratio of R, G, B LED is much different from this ratio. Typically, the Red LED needs the largest current. Choose 255d (the maximum value) CC code for the color group that needs the largest initial current, then choose proper CC code for the other two color groups according to the current ratio requirement of the LED used.

8.3.3 Frequency Multiplier

The LP5891-Q1 has an internal frequency multiplier to generate the GCLK by SCLK. The GCLK frequency can be configured by FREQ_MOD (See FC0 for more details) and FREQ_MUL (see FC0 for more details) from 40 MHz to 160 MHz. As Figure 8-3 shows, if the GCLK frequency is not higher than 80 MHz, the GCLK_MOD is set to 1 to disable the bypass switch (enable the ½ divider), while the GCLK frequency is higher than 80 MHz, the GCLK_MOD is set to 0 to enable the bypass switch (disable the ½ divider).

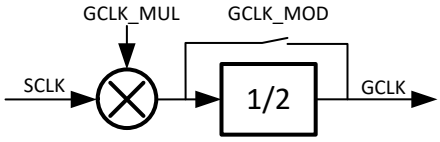

Figure 8-3. Frequency Multiplier Block Diagram

8.3.4 Line Transitioning Sequence

The LP5891-Q1 defines a timing sequence of scan line transition, shown as Figure 8-4. T_SW is the total transitioning time. T_SW is broken up into four intervals: T0 is the time interval between the end of PWM time in current segment and the beginning of channel pre-discharge, T1 is the time interval between the beginning of the channel pre-discharge and the beginning of current line OFF, T2 is the time interval that the beginning of current line OFF and the beginning of next line ON, T3 is the time interval of the beginning of next line ON and the beginning of PWM time in next segment.

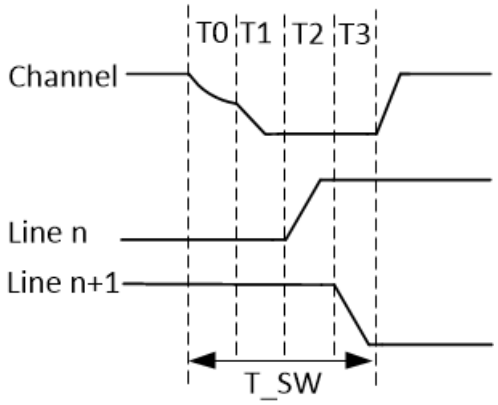

Figure 8-4. Line Transitioning Sequence

The line switch time T_SW equals to T0 + T1 + T2 + T3. T_SW can be configured by the LINE_SWT (see FC1 register bit 40-37 in Table 8-8).

Table 8-4 is the relation between LINE_SWT bits and the line switch time (GCLK numbers) with different internal GCLK frequency.

Table 8-4. Line Switch Time

LINE_SWT	GCLK Numbers	T_SW (us, 40 MHZ GCLK)	T_SW (us, 60 MHZ GCLK)	T_SW (us, 100 MHZ GCLK)	T_SW (us, 120 MHZ GCLK)	T_SW (us, 160 MHZ GCLK)
0000b	45	1.125	0.7515	0.45	0.3735	0.2835
0001b	60	1.5	1.002	0.6	0.498	0.378
0010b	90	2.25	1.503	0.9	0.747	0.567
0011b	120	3	2.004	1.2	0.996	0.756
0100b	150	3.75	2.505	1.5	1.245	0.945
0101b	180	4.5	3.006	1.8	1.494	1.134
0110b	210	5.25	3.507	2.1	1.743	1.323
0111b	240	6	4.008	2.4	1.992	1.512
1000b	270	6.75	4.509	2.7	2.241	1.701
1001b	300	7.5	5.01	3	2.49	1.89
1010b	330	8.25	5.511	3.3	2.739	2.079
1011b	360	9	6.012	3.6	2.988	2.268
1100b	390	9.75	6.513	3.9	3.237	2.457
1101b	420	10.5	7.014	4.2	3.486	2.646
1110b	450	11.25	7.515	4.5	3.735	2.835
1111b	480	12	8.016	4.8	3.984	3.024

Copyright © 2026 Texas Instruments Incorporated

8.3.5 Protections and Diagnostics

8.3.5.1 Thermal Shutdown Protection

The thermal shutdown (TSD) function turns off all IC constant-current outputs when the junction temperature (T_J) exceeds 170°C (typical). The function resumes normal operation when T_J falls below 155°C (typical).

8.3.5.2 IREF Resistor Short Protection

The IREF resistor short protection (ISP) function prevents unwanted large currents from flowing through the constant-current output when the IREF resistor is shorted accidently. The LP5891-Q1 device turns off all output channels when the IREF pin voltage is lower than 0.19 V (typical). When the IREF pin voltage goes higher than 0.325 V (typical), the LP5891-Q1 device resumes normal operation.

8.3.5.3 LED Open Load Detection and Removal

8.3.5.3.1 LED Open Detection

The LED Open Detection (LOD) function detects faults caused by an open circuit in any LED, or a short from OUTn to VLED with low impedance. This function was realized by comparing the OUTn voltage to the LOD detection threshold voltage level set by LODVTH_R/LODVTH_G/LODVTH_B (See FC3 for more details). If the OUTn voltage is higher than the programmed voltage, the corresponding output LOD bit is set to 1 to indicate an open LED. Otherwise, the output of that LOD bit is 0. LOD data output by the detection circuit are valid only during the OUTn turning on period.

Figure 8-5 shows the equivalent circuit of LED open detection.

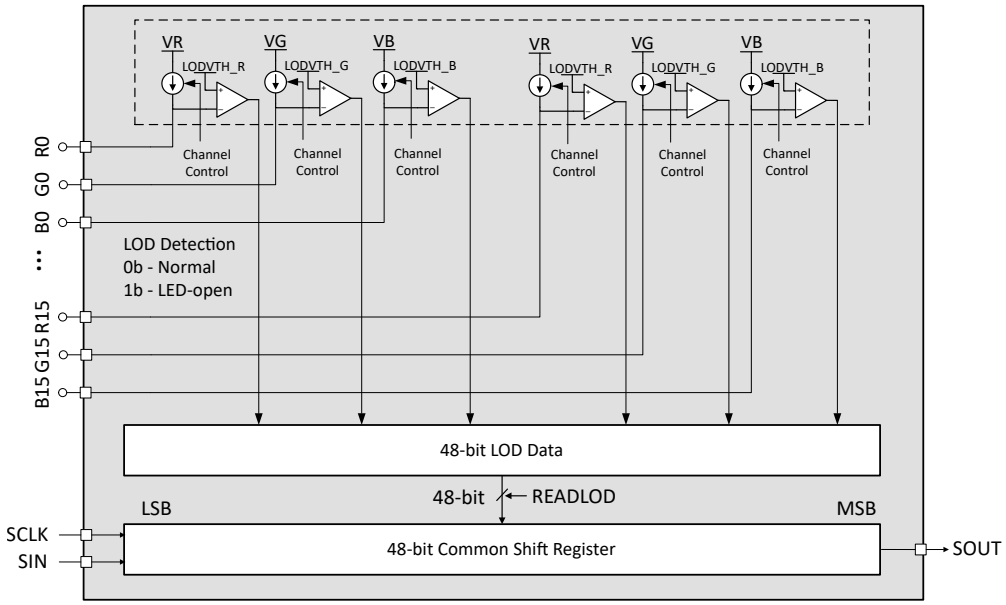

Figure 8-5. LED Open Detection Circuit

The LED open detection function records the position of the open LED, which contains the scan line number and relevant channel number. The scan line order is stored LOD_LINE_WARN register (see FC17 for more details), and the channel number is latched into the internal 48-bit LOD data register (see FC20 for more details) at the end of each segment. Figure 8-6 shows the bit arrangement of the LOD data register.

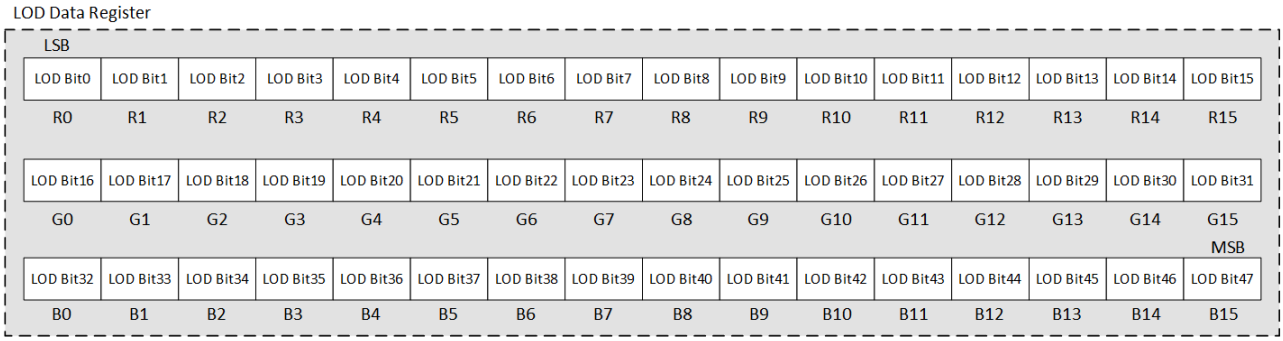

Figure 8-6. Bit Arrangement in LOD Data Register

8.3.5.3.2 Read LED Open Information

The LOD readback function must be enabled before read LED open information. This function is enabled by LOD_LSD_RB (see FC3 for more details).

Figure 8-7 shows the steps to read LED open information. Wait at least one sub-period time between Step2 and Step3 command.

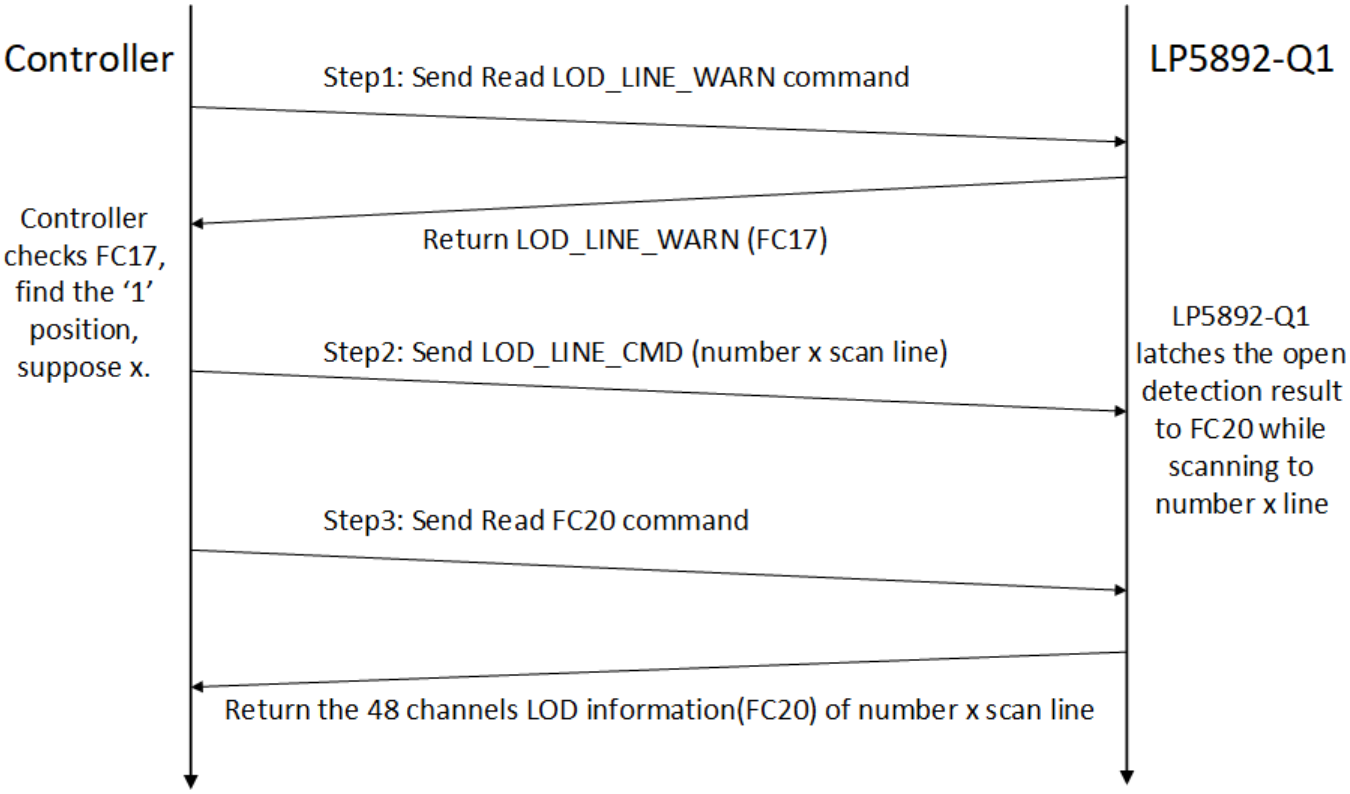

Figure 8-7. Steps to Read LED Open Information

Copyright © 2026 Texas Instruments Incorporated

8.3.5.3.3 LED Open Caterpillar Removal

Figure 8-8 shows the caterpillar issue caused by open LED. Suppose the LED0-1 is an open LED. When line 0 is chosen and the OUT1 is turned on, the OUT1 voltage is forced to approach to VLED because of the broken path of the current source. However, the voltage of the un-chosen lines are below the Vclamp which is much lower than VLED, causing all LEDs which connect to the channel OUT1, light unwanted.

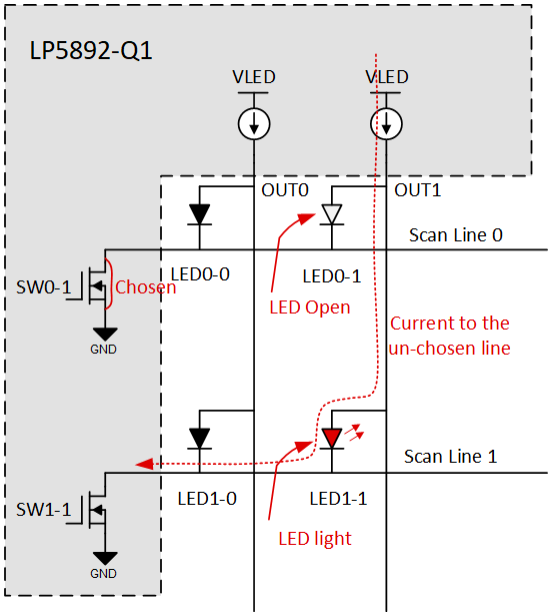

Figure 8-8. LED Open Caterpillar

The LP5891-Q1 implements circuits that can eliminate the caterpillar issue caused by open LEDs. The LED open caterpillar removal function is configured by LOD_RM_EN (see FC0 for more details). When LOD_RM_EN is set to 1b, the caterpillar removal function is enabled. The corresponding channel OUTn is turned off when scanning to line with open LED, The caterpillar issue is eliminated until device resets or LOD_RM_EN is set to 0b.

The internal caterpillar elimination circuit can handle a maximum of three lines that have open LEDs fault condition. If there are open LEDs located in three or fewer lines, the LP5891-Q1 is able to handle the open LEDs all in these lines. If there are open LEDs in more than three lines, the caterpillar issue is solved for the lines where the first three open LEDs were detected, but the open LEDs in the fourth and subsequent lines still cause the caterpillar issue.

8.3.5.4 LED Short and Weak Short Circuitry Detection and Removal

8.3.5.4.1 LED Short/Weak Short Detection

The LED short detection (LSD) function detects faults caused by a short circuit in any LED. This function was realized by comparing the OUTn voltage to the LSD threshold voltage. If the OUTn voltage is lower than the threshold voltage, the corresponding output LSD bit is set to 1 to indicate an short LED, otherwise, the output of that LSD bit is 0. LSD data output by the detection circuit are valid only during the OUTn turning on period.

LSD weak short can be detected by adjusting threshold voltage, which level is set by LSDVTH_R/LSDVTH_G/LSDVTH_B (See FC3 for more details).

Figure 8-9 shows the equivalent circuit of LED short detection.

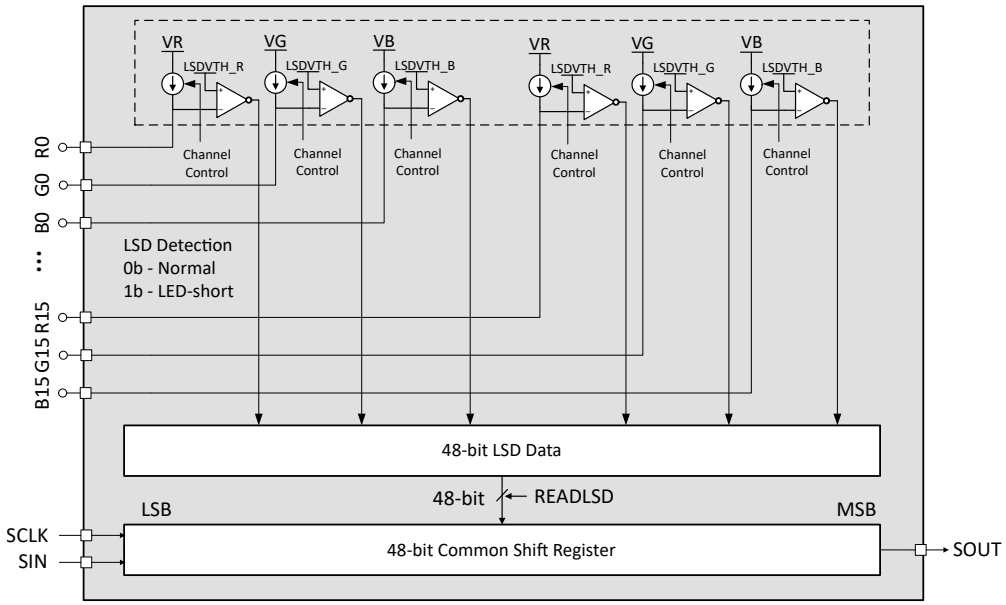

Figure 8-9. LED Short Detection Circuit

The LED short detection function records the position of the short LED, which contains the scan line order and relevant channel number. The scan line order is stored LSD_LINE_WARN register (see FC19 for more details), and the channel number is latched into the internal 48-bit LSD data register (see FC21 for more details) at the end of each segment. Figure 8-10 shows the bit arrangement of the LSD data register.

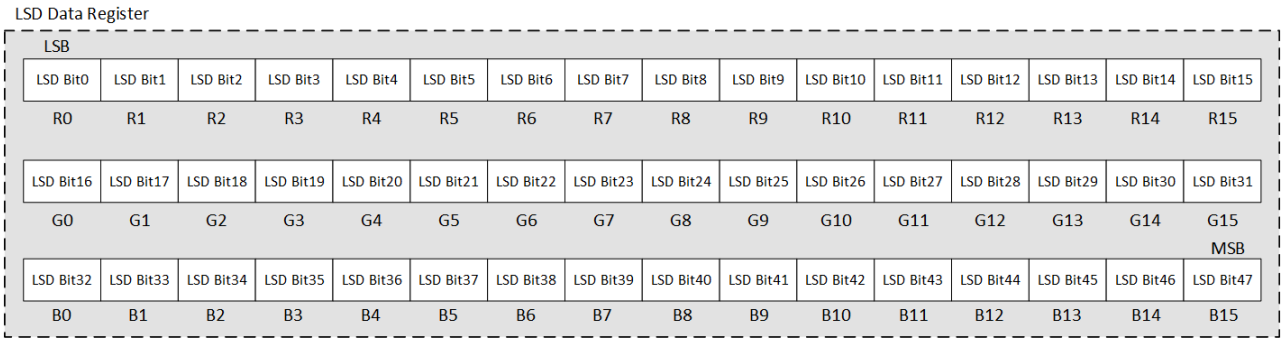

Figure 8-10. Bit Arrangement in the LSD Data Register

Copyright © 2026 Texas Instruments Incorporated

8.3.5.4.2 Read LED Short Information

The LSD readback function must be enabled before reading LED Short information. This function is enabled by LOD_LSD_RB (see FC3 for more details).

Figure 8-11 shows the steps to read LED Short information. Wait at least one sub-period time between Step2 and Step3 command.

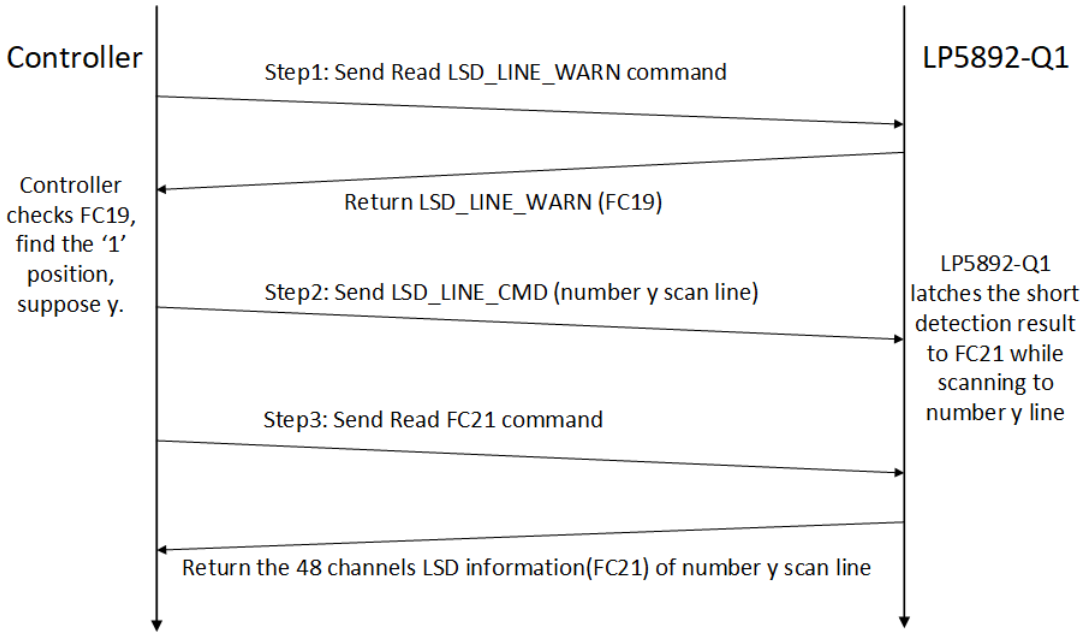

Figure 8-11. Steps to Read LED Short Information

8.3.5.4.3 LSD Caterpillar Removal

Figure 8-12 shows the LSD caterpillar issue caused by short LED. Suppose the LED0-1 is a short LED. When it scans to the line1 and the OUT1 is turned off, the OUT1 voltage is the same with scan line0 voltage because of the short path of the LED0-1. At this time, there is a current path from the line0 to the GND through the LED1-1 and SW1-1, which causes LED1-1 light unwanted.

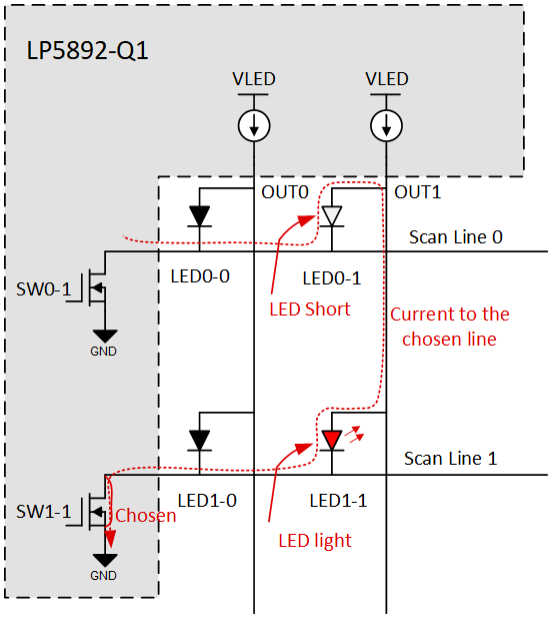

Figure 8-12. LED Short Caterpillar

The LP5891-Q1 device implements internal circuits that can eliminate the caterpillar issue by short LEDs. As is shown in Figure 8-12, the LED short caterpillar is caused by the voltage of the Vclamp on the line. So it can be solved by adjusting the LSD_RM_EN (see FC3 for more details) to let the voltage drop of the LED1-1 be smaller than LED forward voltage.

Copyright © 2026 Texas Instruments Incorporated

8.4 Device Functional Modes

The device functional modes are shown in Figure 8-13.

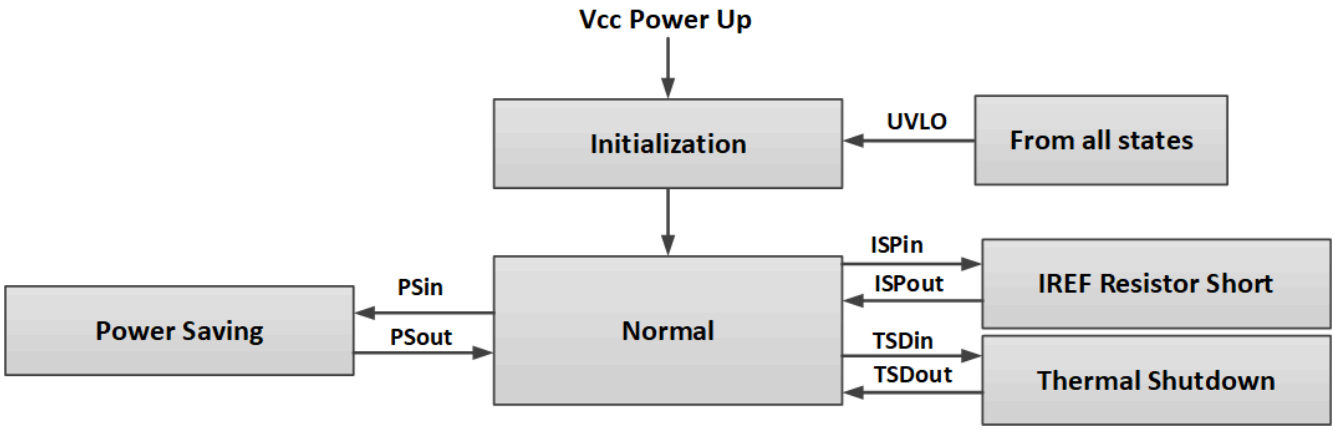

Figure 8-13. Functional Modes

- **Initialization:** The device enters into Initialization when Vcc goes down to UVLO voltage. In this mode, all the registers are reset. Entry can also be from any state.
- **Normal:** The device enters the normal mode when Vcc is higher than UVLO threshold. The display process is shown as below in normal mode.
- **Power saving:** The device automatically enters and gets out from the power save mode when it detects the condition PSin and PSout. In this mode, all channels turn off. PSin: after the device detects that the display data of the next frame all equal to zero, it enters in to power save mode when the VSYNC comes. PSout: after the device detects that there is non-zero display data of the next frame, it gets out from power save mode immediately.
- **IREF resistor short protection:** The device automatically enters and gets out from the IREF resistor short protection mode when it detects the condition ISPin and ISPout. In this mode, all channels turn off. ISPin: the device detects that the reference voltage is smaller than 0.195 V ISPout: the device detects that the reference voltage is larger than 0.325 V.
- **Thermal shutdown:** The device automatically enters and gets out from the thermal shutdown mode when it detects the condition TSDin and TSDout. In this mode, all channels turn off. TSDin: the device detects that the junction temperature exceeds 170°C TSDout: the device detects that the junction temperature is below 155°C.

8.5 Continuous Clock Series Interface

The continuous clock series interface (CCSI) provides access to the programmable functions and registers, SRAM data of the device. The interface contains two input digital pins, these inputs are the serial data input (SIN) and serial clock (SCLK). There is an another wire called serial data output (SOUT) as the output digital signal of the device. The SIN is set to HIGH when device is in idle status and the SCLK must be existent and continuous all the time considering as the clock source of internal Frequency Multiplier, the SOUT is used to transmit the data or read the data of internal registers.

This protocol can support up to 32 devices cascaded in a data chain. The devices receive the chip index command after power up. The chip index command configured addresses of the devices from 0x00 up to 0x1F according to the sequence that receives the command. Then the controller can communicate with all the devices through the broadcast way or particular device through non-broadcast way.

The broadcast is mainly used to transmit function control commands. All the devices in a data chain receive the same data in this way. The non-broadcast is mainly used to transmit function control commands or display data, and each device receives device data in this way. These two ways are distinguished by the command identification.

Copyright © 2026 Texas Instruments Incorporated

8.5.1 Data Validity

The data on DIN wire must be stable at rising edges of the SCLK in transmission.

8.5.2 CCSI Frame Format

Figure 8-14 defines the format of the command and data transmission. There are four states in one frame.

- **IDLE:** SCLK is always existent and continuous, and DIN is always HIGH.
- **START:** DIN changes from HIGH to LOW after the IDLE states.
- **DATA:**
  - **Head_bytes:** The command identifier, contains one 16-bit data and one check bit. Head_bytes can be WRITE COMMAND ID or READ COMMAND ID (see *Register Maps* for more details).
  - **Data_bytes_N:** The Nth data-bytes, contains 3 × 17-bit data, each 17-bit data contains one 16-bit data and one check bit. N is the number of devices cascaded in a data chain.
- **END:** The device recognizes continuous 18-bit HIGH on DIN, then returns to IDLE state.
- **CHECK BIT:** The check bit (17th bit) value is the *NOT* of 16th bit value to avoid continuous 18-bit HIGH (to distinguish with END).

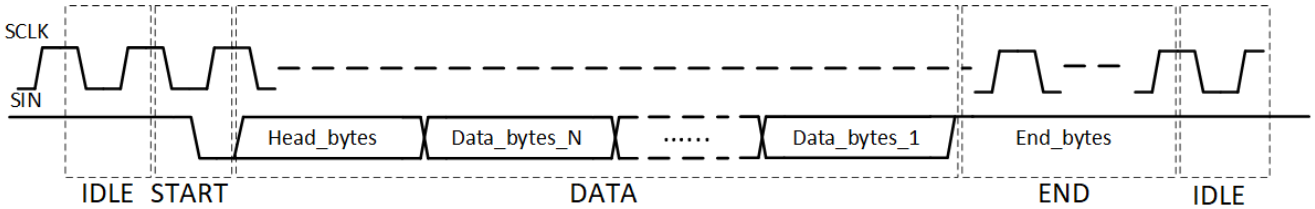

Figure 8-14. CCSI Frame

The IDLE state is not necessary, which means the START state of the next frame can connect to the END state of the current frame.

8.5.3 Write Command

Take m devices cascaded in a data chain for example.

8.5.3.1 Chip Index Write Command

The chip index is used to set the identification of the device cascaded in a data chain. When the first device receives the chip index command Head_bytes1, it sets the current address to 00h and meanwhile change the chip index command Head_bytes2, then sends to the next device. When the device receives the Head_bytes2, it sets the address to 01h and meanwhile changes the chip index command Head_bytes3, then sends to the next device, likewise, all the cascaded devices get their unique identifications.

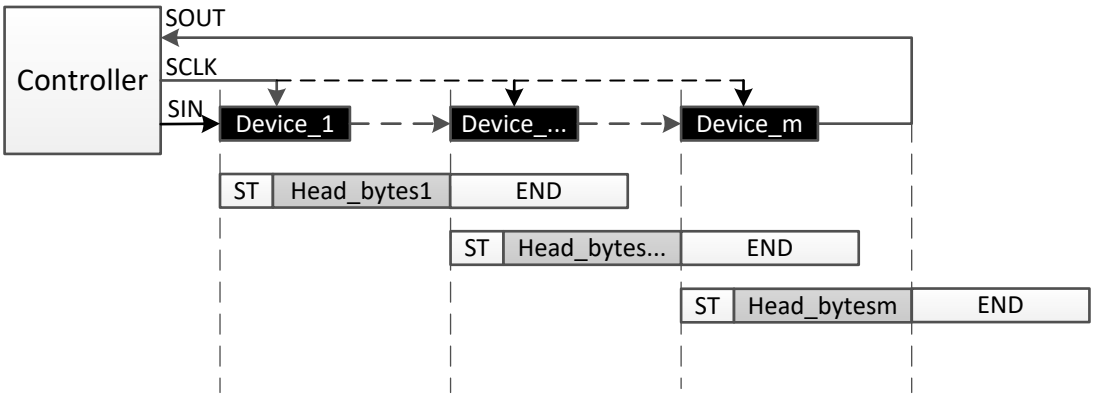

Figure 8-15. Chip Index Write Command

Copyright © 2026 Texas Instruments Incorporated

8.5.3.2 VSYNC Write Command

The VSYNC is used to sync the display of each frame for the devices in a cascaded chain. this command is a write-only command. The devices receive VSYNC command one time from the controller in each frame, and the VSYNC command needs to be active for all devices at the same time.

Because some devices receive the command earlier in the data chain, they need to wait until the last device receives the command, then all the devices are active at that time. To realize such function, each device needs to know its delay time from receiving VSYNC command to enabling VSYNC. The device uses some register bits to restore the device number in a data chain. This number minuses the device identification, and the result is the delay time of the device.

Because the sync function has been done by the device, the controller only must send the VSYNC command to the first device in a data chain.

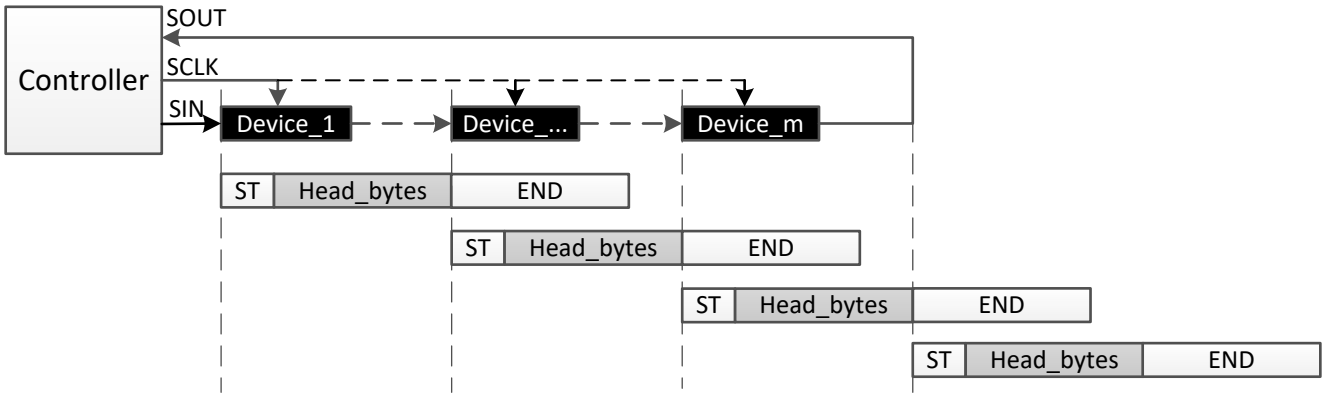

Figure 8-16. VSYNC Write Command

8.5.3.3 MPSM Write Command

The MPSM command is used to control the intelligent power save mode of devices in the same matrix. The device detects all zero data in a stackable module and receives MPSM command in current frame, then when VSYNC command comes, all devices in the same matrix turn off. After the device detects that there is non-zero display data of the next frame, it gets out from intelligent power save mode until MSPM command comes in current frame.

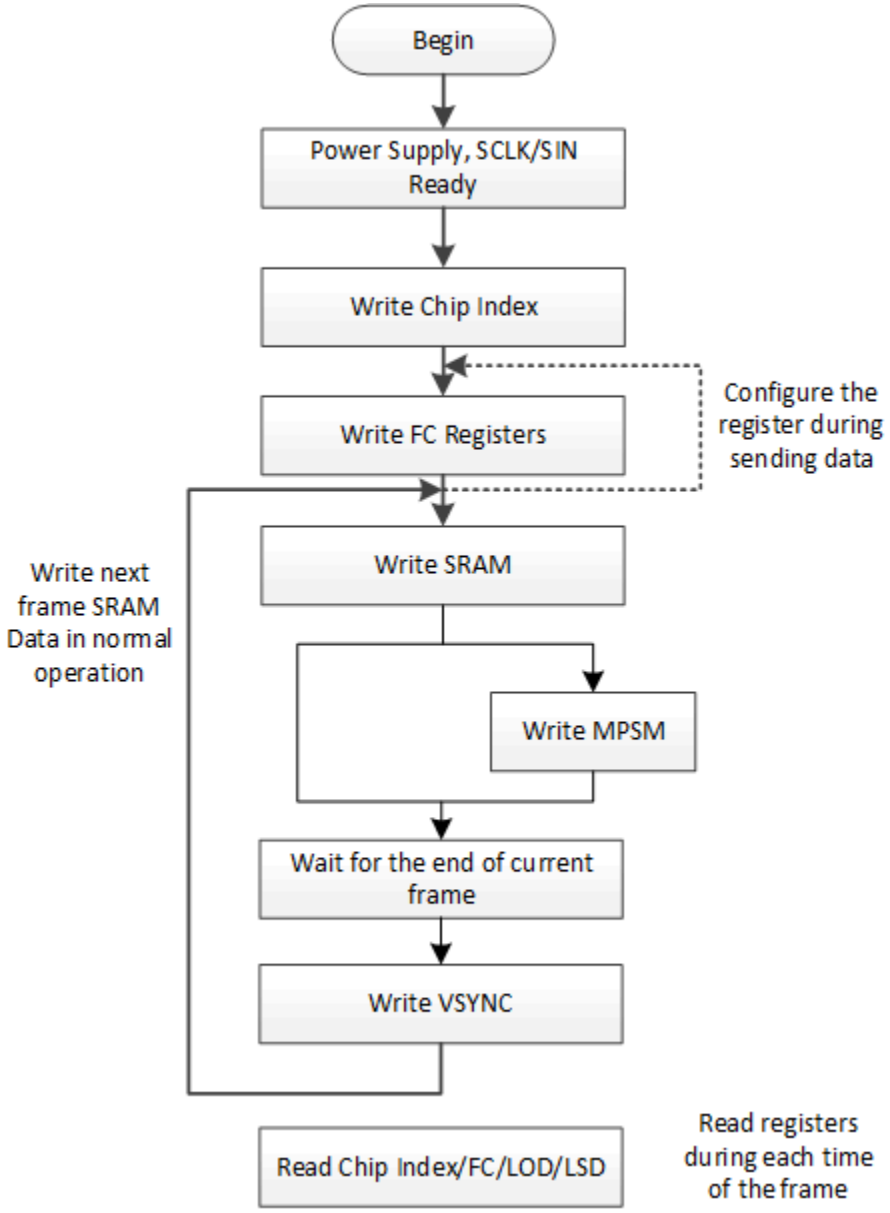

Figure 8-17. Design Procedure for MPSM Command

Copyright © 2026 Texas Instruments Incorporated

8.5.3.4 Standby Clear and Enable Command

Standby clear command and standby enable command are used to control intelligent power save mode of devices in the same daisy chain. When the device receives standby enable command, it enters to intelligent power save mode right away and does not have to wait for other devices in a module or daisy chain. After the device receives standby clear command, it exits from intelligent power save mode immediately and does not wait for other devices in a module or daisy chain.

8.5.3.5 Soft_Reset Command

The Soft_Reset Command is used to reset all the function registers to the default value, except for SRAM data. The format of this command is the same with VSYNC shown as *VSYNC Write Command*. The difference is the headbytes.

8.5.3.6 Data Write Command

The device can receive the function control with broadcast and non-broadcast way, which depends on the configuration of the devices. If the cascaded devices have the same configuration, broadcast is used,. If the cascaded devices have the different configurations, non-broadcast is used. It is always the MSB transmitted first and the LSB transmitted last. For 48-bits RGB data, the Blue data must be transmitted first, then the Green, and last the Red data.

For broadcast, the devices receive the same data, when devices recognize the broadcast command, they copy the data to their internal registers. Generally, it is used for write FC0-FC13 command, LOD/LSD.

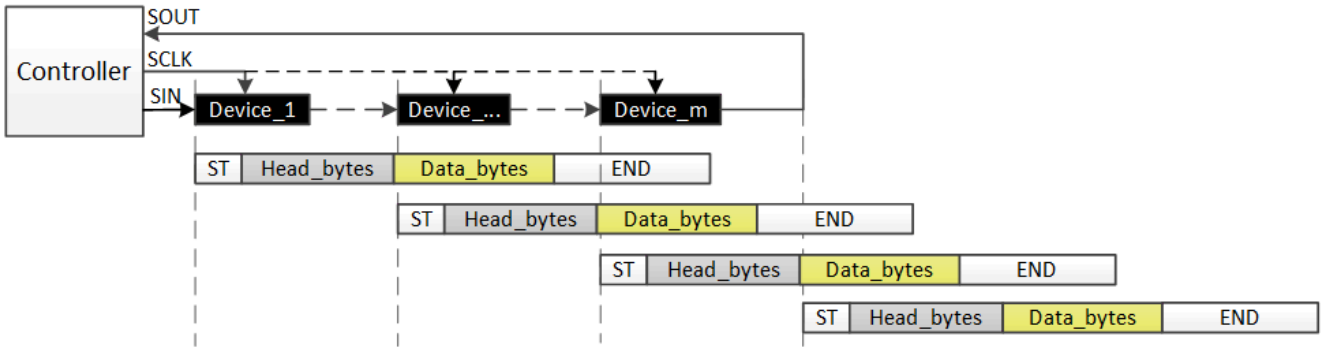

Figure 8-18. Data Write Command with Broadcast

Figure 8-19 shows the time diagram of the Data Write Command with Broadcast.

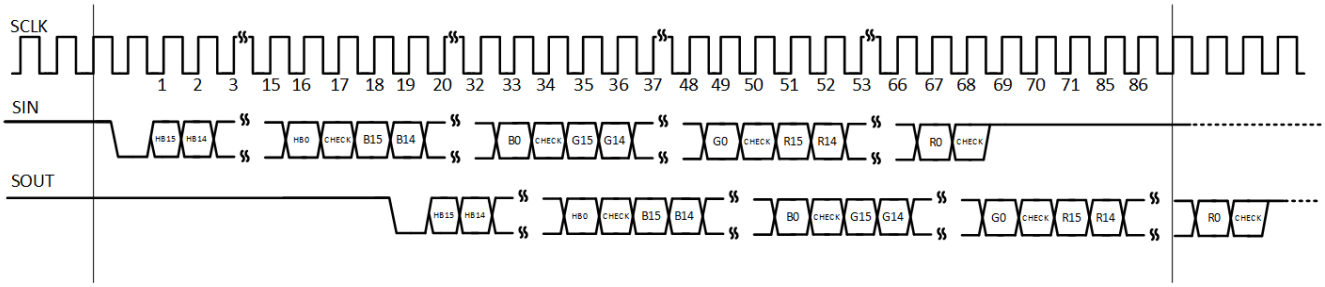

Figure 8-19. Data Write Command with Broadcast (Timing Diagram)

For non-broadcast, the devices receive the different data, the controller prepares the data as the figure shows. One pixel data is written to the corresponding device in each command. When the first device receives the END, it cuts off the last 51-bit (3 × 17-bit) data before the END, and the left are shifted out from SDO to the second device. Similarly, when the second device receives the END bytes from the former device, it cuts off the last 51-bit (3 × 17-bit) data before the END, and the left are shifted out to the next device. Generally, it is used for write SRAM command (WRTGS). Details for how to write a frame data into memory bank can be found in *Write a Frame Data into Memory Book*.

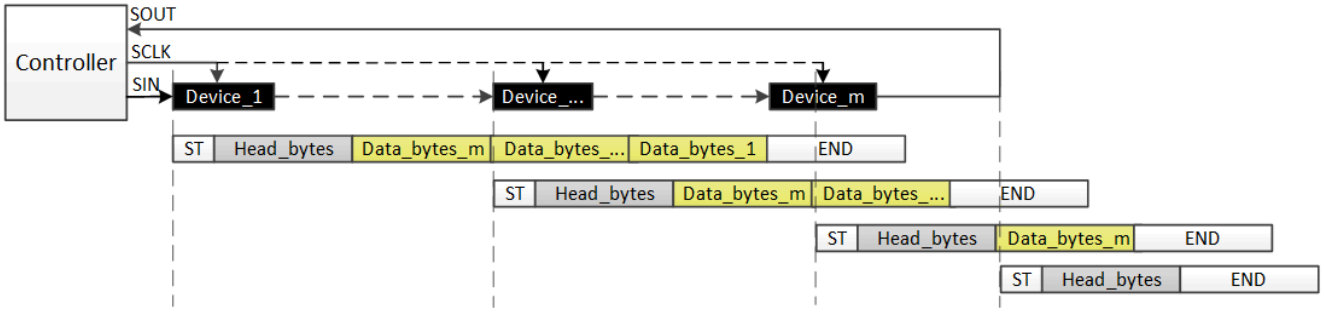

Figure 8-20. Data Write Command with Non-Broadcast

Figure 8-21 shows the time diagram of the Data Write Command with Non-Broadcast.

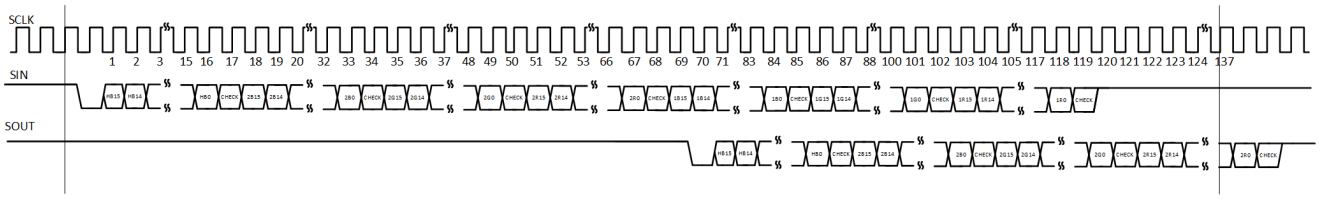

Figure 8-21. Data Write Command with Non-Broadcast (Timing Diagram)

8.5.4 Read Command

The controller sends the read command. When the first device receives this command, it inserts its 48-bit data before End_bytes, and meanwhile shifts out to the second device. When the second device receives this command, it inserts its 48-bit data before End_bytes and meanwhile shifts out to the third device. The data of all the device are shifted out from the last device SOUT with this flow. The MSB is always transmitted first and the LSB transmitted last.

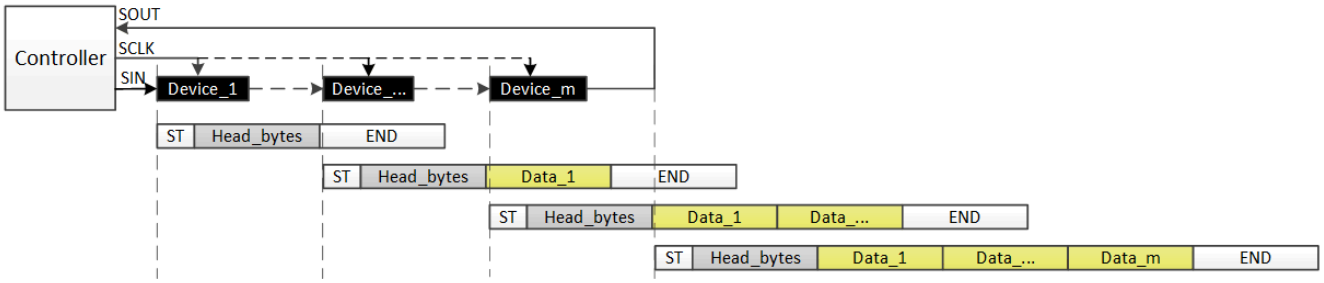

Figure 8-22. Data Read Command

Copyright © 2026 Texas Instruments Incorporated

8.6 PWM Grayscale Control

8.6.1 Grayscale Data Storage and Display

8.6.1.1 Memory Structure Overview

The LP5891-Q1 implements a display memory unit to achieve high refresh rate and high contrast ratio in an LED display products. The internal display memory unit is divided into two BANKs: BANK A and BANK B. During the normal operation, one BANK is selected to display the data of current frame, another is used to restore the data of next frame. The BANK switcher is controlled by the BANK_SEL bit, which is an internal flag register bit.

After power on, BANK_SEL is initialized to 0, and BANK A is selected to restore the data of next frame. Meanwhile, the data in BANK B is read out for display. When one frame has elapsed, the controller sends the vertical synchronization (VSYNC) command to start the next frame, the BANK_SEL bit value is toggled and the selection of the two BANKs reverses. Repeat this operation until all the frame images are displayed.

With this method, the LP5891-Q1 device can display the current frame image at a very high refresh rate. See Figure 8-23 for more details about the BANK-selection exchange operation.

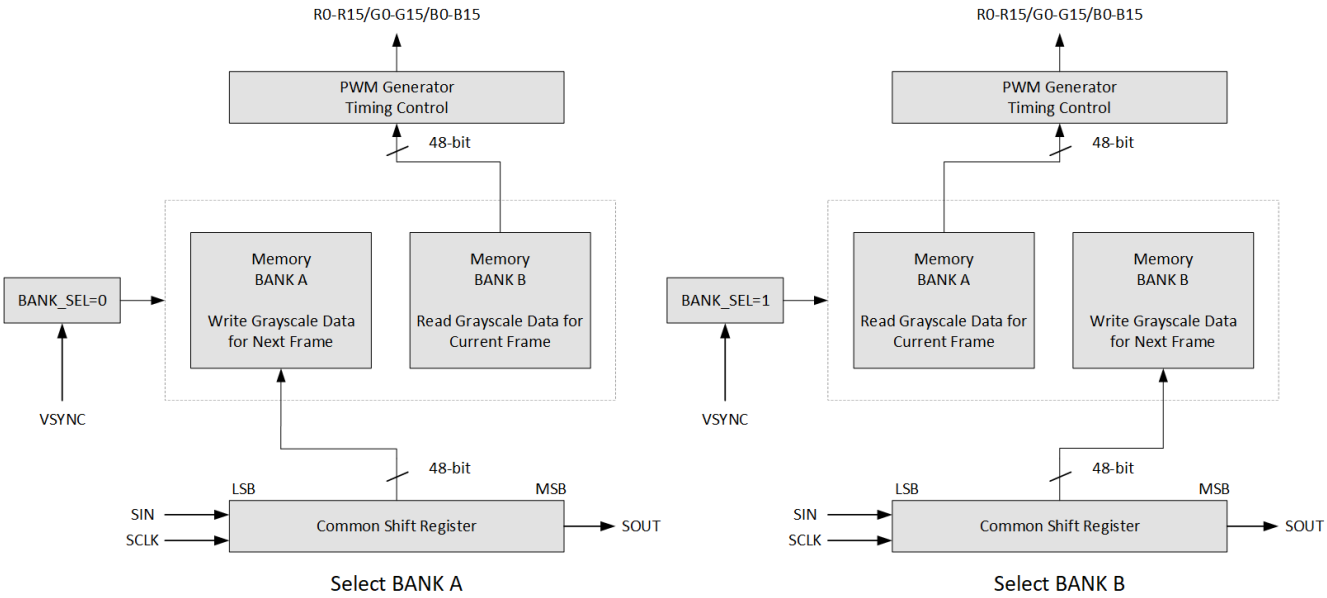

Figure 8-23. Bank Selection Exchange Operation

8.6.1.2 Details of Memory Bank

Each memory BANK contains the frame-image grayscale data of all the 32 lines. Each line comprises sixteen 48-bit-width memory units. Each memory unit contains the grayscale data of the corresponding R/G/B channels.

Depending on the number of scan lines set in SCAN_NUM (FC0 bit 20 to bit 16), the total number of memory units that must be written in one BANK is: 48 × the number of scan lines. For example, if the number of scan lines is set to 32, then 1536 (32 × 48 = 1536) memory units must be written during each frame period.

Figure 8-24 shows the detailed memory structure of the LP5891-Q1 device.

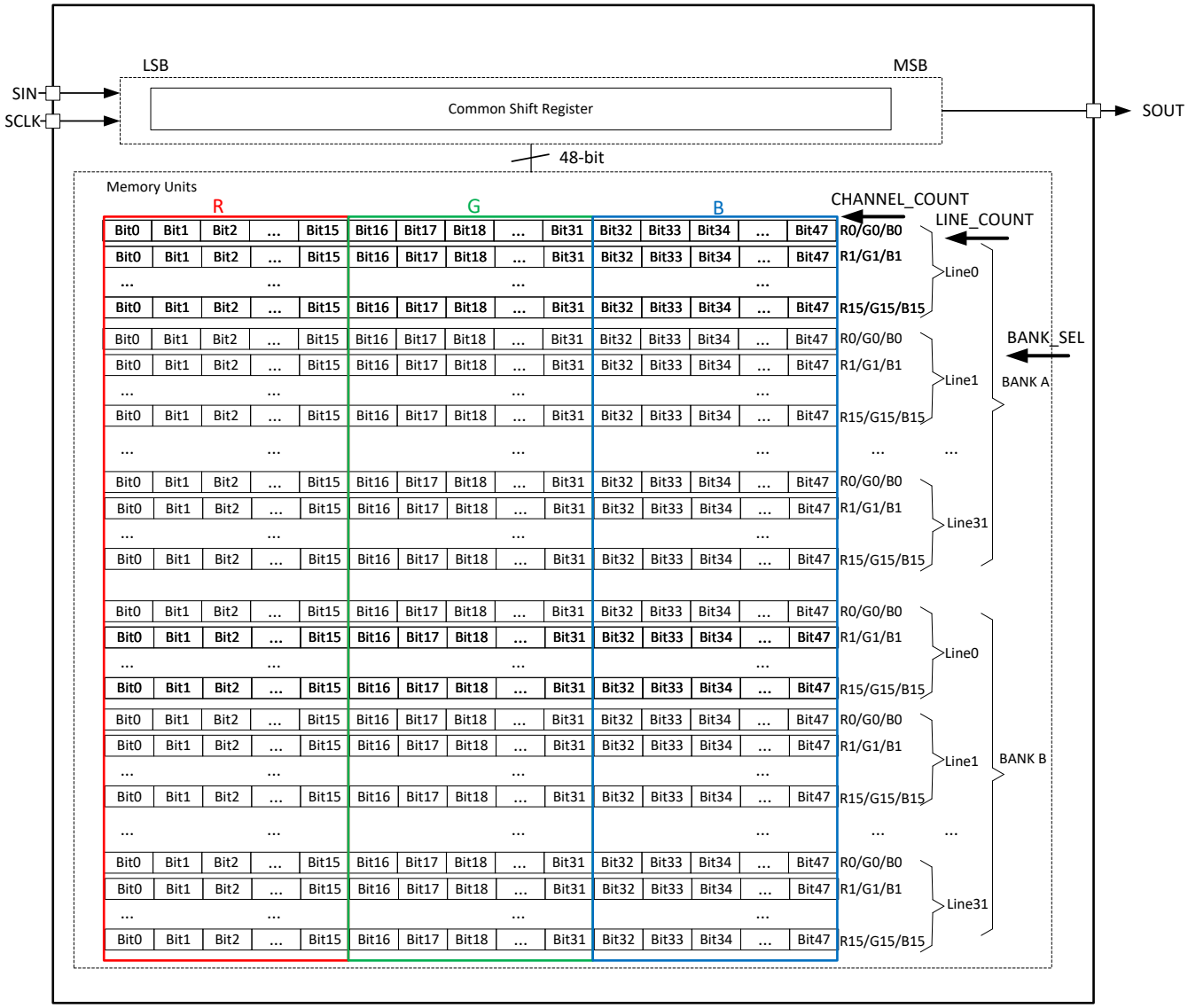

Figure 8-24. LP5891-Q1 Memory-unit Structure

Copyright © 2026 Texas Instruments Incorporated

8.6.1.3 Write a Frame Data into Memory Bank

After power on, the LP5891-Q1 internal flag BANK_SEL, and counters LINE_COUNT, CHANNEL_COUNT, are all initialized to 0. Thus, the memory unit of channel R0/G0/B0, locating in line 0 of BANK A, is selected to restore the data transimitted the first time after VSYNC command.

When the first WRTGS command is received, all the data in the common shift register is latched into the memory unit of channel R0/G0/B0, locating in line 0 of BANK A. Then CHANNEL_COUNT increases by 1 and LINE_COUNT stays the same. Thus, the memory unit of channel R1/G1/B1, locating in line 0 of BANK A, is selected to restore the data transimitted the second time after VSYNC command.

When the second WRTGS command is received, all the data in the common shift register is latched into the memory unit of channel R1/G1/B1, locating in line 0 of BANK A. Then CHANNEL_COUNT increases by 1 and LINE_COUNT stays the same. Thus, the memory unit of channel R2/G2/B2, locating in line 0 of BANK A, is selected to restore the data transimitted the third time after VSYNC command.

Repeat the grayscale-data-write operation until the 16th WRTGS command is received. Then CHANNEL_COUNT is reset to 0 and LINE_COUNT increases by 1. Thus, the memory unit of channel R0/G0/B0, locating in line 1 of BANK A, is selected to restore the data transimitted the 17th time after VSYNC command.

Repeat this operation for each line until the LINE_COUNT exceeds the number of scan lines set in the SCAN_NUM (See FC0 register bit20-16) and all scan lines have been updated with new GS data, which means one frame of GS data is restored into the memory BANK. Then the LINE_COUNT is reset to 0.

8.6.2 PWM Control for Display

To increase the refresh rate in time-multiplexing display system, a DS-PWM (Dynamic Spectrum-Pulse Width Modulation) algorithm is proposed in this device. One frame is divided into many segments shown below. Note that one frame is divided into n sub-periods, n is set by SUBP_NUM (FC0 register bit24-22), and each sub-period is divided into 32 segments for 32 scan lines. Each segment contains GS GCLKs time for grayscale data display and T_SW GCLKs time for switching lines. GS is configured by the SEG_LENGTH (FC1 register bit9-0 in Table 8-8) , and T_SW is the line switch time, which is configured by the LINE_SWT (see FC1 register bit 40-37 in Table 8-8).

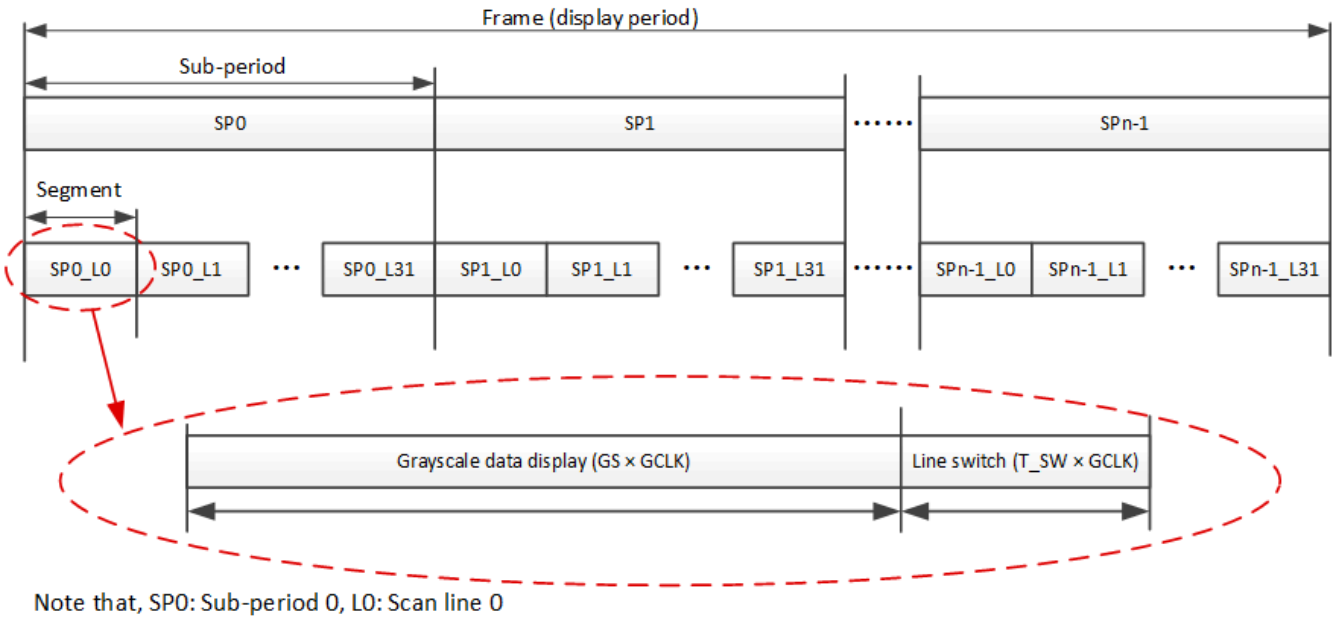

Figure 8-25. DS-PWM Algorithm with 32 Scan Lines

The DS-PWM can not only increase the refresh rate meanwhile keep the same frame rate, but also decrease the brightness loss in low grayscale, which can smoothly increase the sub-period number when the grayscale data increases.

To achieve ultra-low luminance, the LED driver must have the ability to output a very short current pulse (1 GCLK time), however, because of the parasitic capacitor of the LEDs, such pulse can not turn on the LEDs. The larger GCLK frequency is, the harder to turn on LEDs.

DS-PWM algorithm have a parameter called subperiod threshold, which is used to calculate when to change subperiod number according to the giving grayscale data. Subperiod threshold defines the LED minimum turn-on time, so as to conquer the current loss caused by LED parasitic capacitor. Subperiod threshold is configured by the LG_STEP_R/G/B (FC1 register bit24-10 in Table 8-8).

With DS-PWM algorithm, the brightness has smoothly increased with the gradient grayscale data.

Copyright © 2026 Texas Instruments Incorporated

8.7 Register Maps

Table 8-5. Register Maps

REGISTER NAME	TYPE	WRITE COMMAND ID	READ COMMAND ID	DESCRIPTION
FC0	R/ $\overline{W}$	AA00h	AA60h	Common configuration
FC1	R/ $\overline{W}$	AA01h	AA61h	Common configuration
FC2	R/ $\overline{W}$	AA02h	AA62h	Common configuration
FC3	R/ $\overline{W}$	AA03h	AA63h	Common configuration
FC4	R/ $\overline{W}$	AA04h	AA64h	Common configuration
FC14	R/ $\overline{W}$	AA0Eh	AA6Eh	Locate the line for LOD
FC15	R/ $\overline{W}$	AA0Fh	AA6Fh	Locate the line for LSD
FC17	R		AAA1h	Read the lines' warning of LOD from 32th~1st line
FC19	R		AAA3h	Read the lines' warning of LSD from 32th~1st line
FC20	R		AAA4h	Read the channel's warning of LOD
FC21	R		AAA5h	Read the channel's warning of LSD
Chip Index	R/ $\overline{W}$	AA10h	AA70h	Read/Write chip index
VSYNC	$\overline{W}$	AAF0h		Write VSYNC command
MPSM	$\overline{W}$	AA90h		Write matrix PSM command
SBY_CLR	$\overline{W}$	AAB0h		Write standby clear command
SBY_EN	$\overline{W}$	AAB1h		Write standby enable command
Soft_Reset	$\overline{W}$	AA80h		Reset the all the registers expect the SRAM
SRAM	$\overline{W}$	AA30h		Write or read the SRAM data

Table 8-6. Access Type Codes

Access Type	Code	Description
Read Type		
R	R	Read
Write Type		
W	W	Write
Reset or Default Value		
-n		Value after reset or the default value

8.7.1 FC0

FC0 is shown in FC0 Register and described in FC0 Register Field Descriptions.

Figure 8-26. FC0 Register

47	46	45	44	43	42	41	40	39	38	37	36	35	34	33	32
LSD_RM_EN	RESERVED		GRP_DLY_B			GRP_DLY_G			GRP_DLY_R			RESERVED			FREQ_MUL
R/W-0b	R-01b		R/W-000b			R/W-000b			R/W-000b			R-000b			
31	30	29	28	27	26	25	24	23	22	21	20	19	18	17	16
FREQ_MUL			FREQ_MOD	RESERVED			SUBP_NUM			SCAN_NUM					
R/W-0111b			R/W-0b	R-000b			R/W-000b			R/W-000000b					
15	14	13	12	11	10	9	8	7	6	5	4	3	2	1	0
LODRM_EN	PSP_MOD		PS_EN	RESERVED			PDC_EN	RESERVED			CHIP_NUM				

Figure 8-26. FC0 Register (continued)

R/W-0b	R/W-00b	R/W-0b	R-000b	R/W-1b	R-000b	R/W-00111b

Table 8-7. FC0 Register Field Descriptions

Bit	Field	Type	Reset	Description
4-0	CHIP_NUM	R/W	00111b	Set the device number 00000b: 1 device ... 01111b: 16 devices ... 11111b: 32 devices
7-5	RESERVED	R	000b	
8	PDC_EN	R/W	1b	Enable or disable pre-discharge function 0b: disable 1b: enable
11-9	RESERVED	R	000b	
12	PS_EN	R/W	0b	Enable or disable the power saving mode 0b: disable 1b: enable
14-13	PSP_MOD	R/W	00b	Set the powering saving plus mode 00b: disable 01b: save power at high level 10b: save power at middle level 11b: save power at low level
15	LODRM_EN	R/W	0b	Enable or disable the LED open load removal function 0b: disable 1b: enable
20-16	SCAN_NUM	R/W	00000b	Set the scan line number 00000b: 1 line ... 01111b: 16 lines ... 11111b: 32 lines
21	RESERVED	R	0b	
24-22	SUBP_NUM	R/W	000b	Set the subperiod number 000b: 16 001b: 32 010b: 48 011b: 64 100b: 80 101b: 96 110b: 112 111b: 128
27-25	RESERVED	R	000b	
28	FREQ_MOD	R/W	0b	Set the GCLK multiplier mode 0b: high frequency mode, 80MHz to 160MHz 1b: low frequency mode, 40MHz to 80MHz
32-29	FREQ_MUL	R/W	0111b	Set the GCLK multiplier frequency 0000b: 1 x SCLK frequency ... 0111b: 8 x SCLK frequency ... 1111b: 16 x SCLK frequency
35-33	RESERVED	R	000b	

Copyright © 2026 Texas Instruments Incorporated

Table 8-7. FC0 Register Field Descriptions (continued)

Bit	Field	Type	Reset	Description
38-36	GRP_DLY_R	R/W	000b	Set the Red group delay, forward PWM mode only 000b: no delay 001b: 1 GCLK 010b: 2 GCLK 011b: 3 GCLK 100b: 4 GCLK 101b: 5 GCLK 110b: 6 GCLK 111b: 7 GCLK
41-39	GRP_DLY_G	R/W	000b	Set the Green group delay, forward PWM mode only 000b: no delay 001b: 1 GCLK 010b: 2 GCLK 011b: 3 GCLK 100b: 4 GCLK 101b: 5 GCLK 110b: 6 GCLK 111b: 7 GCLK
44-42	GRP_DLY_B	R/W	000b	Set the Blue group delay, forward PWM mode only 000b: no delay 001b: 1 GCLK 010b: 2 GCLK 011b: 3 GCLK 100b: 4 GCLK 101b: 5 GCLK 110b: 6 GCLK 111b: 7 GCLK
46-45	RESERVED	R	01b	
47	LSD_RM_EN	R/W	0b	Enable or disable short LED caterpillar 0b: disable 1b: enable

8.7.2 FC1

FC1 is shown in FC1 Register and described in FC1 Register Field Descriptions.

Figure 8-27. FC1 Register

47	46	45	44	43	42	41	40	39	38	37	36	35	34	33	32
RESERVED	BLK_ADJ						LINE_SWT				LG_ENH_B				LG_ENH_G
R-0b	R/W-000000b						R/W-0111b				R/W-0000b				
31	30	29	28	27	26	25	24	23	22	21	20	19	18	17	16
LG_ENH_G			LG_ENH_R				LG_STEP_B					LG_STEP_G			
R/W-0000b			R/W-0000b				R/W-01001b					R/W-01001b			
15	14	13	12	11	10	9	8	7	6	5	4	3	2	1	0
LG_STEP_G	LG_STEP_R					SEG_LENGTH									
	R/W-01001b					R/W-0'000'000'000b									

Table 8-8. FC1 Register Field Descriptions

Bit	Field	Type	Reset	Description
9-0	SEG_LENGTH	R/W	0'000'000'000b	Set the GCLK number in each segment 127d: 128 GCLK ... 1023d: 1024 GCLK others: 128 GCLK
14-10	LG_STEP_R	R/W	01001b	Adjust the smooth of the brightness in low grayscale 00000b: level 1 ... 01111b: level 16 ... 11111b: level 32
19-15	LG_STEP_G	R/W	01001b	Adjust the smooth of the brightness in low grayscale 00000b: level 1 ... 01111b: level 16 ... 11111b: level 32
24-20	LG_STEP_B	R/W	01001b	Adjust the smooth of the brightness in low grayscale 00000b: level 1 ... 01111b: level 16 ... 11111b: level 32
28-25	LG_ENH_R	R/W	0000b	Adjust low grayscale enhancement of red channels 0000b: level 0 ... 0111b: level 7 ... 1111b: level 15
32-29	LG_ENH_G	R/W	0000b	Adjust low grayscale enhancement of green channels 0000b: level 0 ... 0111b: level 7 ... 1111b: level 15
36-33	LG_ENH_B	R/W	0000b	Adjust low grayscale enhancement of blue channels 0000b: level 0 ... 0111b: level 7 ... 1111b: level 15

Copyright © 2026 Texas Instruments Incorporated

Table 8-8. FC1 Register Field Descriptions (continued)

Bit	Field	Type	Reset	Description
40-37	LINE_SWT	R/W	0111b	Set the scan line switch time. 0000b: 45 GCLK 0001b: 2x30 GCLK ... 0111b: 8x30 GCLK ... 1111b: 16x30 GCLK
46-41	BLK_ADJ	R/W	000000b	Set the black field adjustment 000000b: 0 GCLK ... 011111b: 31 GCLK ... 111111b: 63 GCLK
47	RESERVED	R	0b	Reserved bit.

8.7.3 FC2

FC2 is shown in FC2 Register and described in FC2 Register Field Descriptions.

Figure 8-28. FC2 Register

47	46	45	44	43	42	41	40	39	38	37	36	35	34	33	32
MPSM_EN	RESERVED			MOD_SIZE	SUBP_MAX_256	CH_B_IMMUNITY	CH_G_IMMUNITY	CH_R_IMMUNITY	RESERVED			LG_COLOR_B			
R/W-0b	R-000b			R/W-0b	R/W-0b	R/W-1b	R/W-1b	R/W-1b	R-000b			R/W-0000b			
31	30	29	28	27	26	25	24	23	22	21	20	19	18	17	16
LG_COLOR_G				LG_COLOR_R				DE_COUPLE1_B				DE_COUPLE1_G			
R/W-0000b				R/W-0000b				R/W-0000b				R/W-0000b			
15	14	13	12	11	10	9	8	7	6	5	4	3	2	1	0
DE_COUPLE1_R				V_PDC_B				V_PDC_G				V_PDC_R			
R/W-0000b				R/W-0110b				R/W-0110b				R/W-0110b			

Table 8-9. FC2 Register Field Descriptions

Bit	Field	Type	Reset	Description
3-0	V_PDC_R	R/W	0110b	Set the Red pre_discharge voltage (typical), the voltage value must not be higher than (VR-1.3V). 0000b: 0.1V 0001b: 0.2V 0010b: 0.3V 0011b: 0.4V 0100b: 0.5V 0101b: 0.6V 0110b: 0.7V 0111b: 0.8V 1000b: 0.9V 1001b: 1.0V 1010b: 1.1V 1011b: 1.3V 1100b: 1.5V 1101b: 1.7V 1110b: 1.9V 1111b: 2.1V

Copyright © 2026 Texas Instruments Incorporated

Table 8-9. FC2 Register Field Descriptions (continued)

Bit	Field	Type	Reset	Description
7-4	V_PDC_G	R/W	0110b	Set the Green pre_discharge voltage (typical), the voltage value must not be higher than (VG-1.3V). 0000b: 0.1V 0001b: 0.2V 0010b: 0.3V 0011b: 0.4V 0100b: 0.5V 0101b: 0.6V 0110b: 0.7V 0111b: 0.8V 1000b: 0.9V 1001b: 1.0V 1010b: 1.1V 1011b: 1.3V 1100b: 1.5V 1101b: 1.7V 1110b: 1.9V 1111b: 2.1V
11-8	V_PDC_B	R/W	0110b	Set the Blue pre_discharge voltage (typical), the voltage value must not be higher than (VB-1.3V). 0000b: 0.1V 0001b: 0.2V 0010b: 0.3V 0011b: 0.4V 0100b: 0.5V 0101b: 0.6V 0110b: 0.7V 0111b: 0.8V 1000b: 0.9V 1001b: 1.0V 1010b: 1.1V 1011b: 1.3V 1100b: 1.5V 1101b: 1.7V 1110b: 1.9V 1111b: 2.1V
15-12	DE_COUPLE1_R	R/W	0000b	Set the Red decoupling level 0000b: level 1 (lowest) ... 0111b: level 8 (middle) ... 1111b: level 16(highest)
19-16	DE_COUPLE1_G	R/W	0000b	Set the Green decoupling level 0000b: level 1 (lowest) ... 0111b: level 8 (middle) ... 1111b: level 16(highest)
23-20	DE_COUPLE1_B	R/W	0000b	Set the Blue decoupling level 0000b: level 1 (lowest) ... 0111b: level 8 (middle) ... 1111b: level 16(highest)
27-24	LG_COLOR_R	R/W	0000b	Set the Red brightness compensation level of the low grayscale 0000b: level 1 (lowest) ... 0111b: level 8 (middle) ... 1111b: level 16(highest)

Copyright © 2026 Texas Instruments Incorporated

Table 8-9. FC2 Register Field Descriptions (continued)

Bit	Field	Type	Reset	Description
31-28	LG_COLOR_G	R/W	0000b	Set the Red brightness compensation level of the low grayscale 0000b: level 1 (lowest) ... 0111b: level 8 (middle) ... 1111b: level 16(highest)
35-32	LG_COLOR_B	R/W	0000b	Set the Red brightness compensation level of the low grayscale 0000b: level 1 (lowest) ... 0111b: level 8 (middle) ... 1111b: level 16(highest)
38-36	RESERVED	R	000b	
39	CH_R_IMMUNITY	R/W	1b	Set the immunity of the Red channels group 0b: high immunity 1b: low immunity
40	CH_G_IMMUNITY	R/W	1b	Set the immunity of the Green channels group 0b: high immunity 1b: low immunity
41	CH_B_IMMUNITY	R/W	1b	Set the immunity of the Blue channels group 0b: high immunity 1b: low immunity
42	SUBP_MAX_256	R/W	0b	Set the maximum subperiod to 256. 0b: disable 1b: enable
43	MOD_SIZE	R/W	0b	Set the module size. 0b: 16x16 RGB pixels 1b:32x32 RGB pixels
46 -44	RESERVED	R	000b	
47	MPSM_EN	R/W	0b	Enable or disable matrix power saving mode. 0b: disable 1b: enable

8.7.4 FC3

FC3 is shown in FC3 Register and described in FC3 Register Field Descriptions.

Figure 8-29. FC3 Register

47	46	45	44	43	42	41	40	39	38	37	36	35	34	33	32
LSDVTH_B			LSDVTH_G			LSDVTH_R			LSD_RM				BC		
R/W-000b			R/W-000b			R/W-000b			R/W-0111b				R/W-011b		
31	30	29	28	27	26	25	24	23	22	21	20	19	18	17	16
CC_B								CC_G							
R/W-0111 1111b								R/W-0111 1111b							
15	14	13	12	11	10	9	8	7	6	5	4	3	2	1	0
CC_R								LOD_LSD_RB	RESERVED	LODVTH_B		LODVTH_G		LODVTH_R	
R/W-0111 1111b								R/W-0b	R-0b	R/W-00b		R/W-00b		R/W-00b	

Table 8-10. FC3 Register Field Descriptions

Bit	Field	Type	Reset	Description
1-0	LODVTH_R	R/W	00b	Set the Red LED open load detection threshold 00b: (V_{LEDR}-0.2) V 01b: (V_{LEDR}-0.5) V 10b: (V_{LEDR}-0.9) V 11b: (V_{LEDR}-1.2) V
3-2	LODVTH_G	R/W	00b	Set the Green LED open load detection threshold 00b: (V_{LEDG}-0.2) V 01b: (V_{LEDG}-0.5) V 10b: (V_{LEDG}-0.9) V 11b: (V_{LEDG}-1.2) V
5-4	LODVTH_B	R/W	00b	Set the Blue LED open load detection threshold 00b: (V_{LEDB}-0.2) V 01b: (V_{LEDB}-0.5) V 10b: (V_{LEDB}-0.9) V 11b: (V_{LEDB}-1.2) V
6	RESERVED	R	0b	
7	LOD_LSD_RB	R/W	0b	Enable or disable the LOD and LSD readback function 0b: disabled 01b: enabled
15-8	CC_R	R/W	0111 1111b	Set the Red color brightness level 0000 0000b: level 0 (lowest) ... 0111 1111b: level 127 (middle) ... 1111 1111b: level 255 (highest)
23-16	CC_G	R/W	0111 1111b	Set the Green color brightness level 0000 0000b: level 0 (lowest) ... 0111 1111b: level 127 (middle) ... 1111 1111b: level 255 (highest)
31-24	CC_B	R/W	0111 1111b	Set the Blue color brightness level 0000 0000b: level 0 (lowest) ... 0111 1111b: level 127 (middle) ... 1111 1111b: level 255 (highest)
34-32	BC	R/W	011b	Set the global brightness level 000b: level 0 (lowest) ... 011b: level 3 (middle) ... 111b: level 7 (highest)
38-35	LSD_RM	R/W	0111b	Set the LED short removal level 0000b: level 1 0001b: level 2 0010b: level 3 0011b: level 4 0100b: level 5 0101b: level 6 0110b: level 7 0111b: level 8 1000b: level 9 1001b: level 10 1010b: level 11 1011b: level 12 1100b: level 13 1101b: level 14 1110b: level 15 1111b: level 16

Copyright © 2026 Texas Instruments Incorporated

Table 8-10. FC3 Register Field Descriptions (continued)

Bit	Field	Type	Reset	Description
41-39	LSDVTH_R	R/W	000b	Set the Red LED short/weak short circuitry detection threshold (typical) 000b: 0.2 V 001b: 0.4 V 010b: 0.8 V 011b: 1.0 V 100b: 1.2 V 101b: 1.4 V 110b: 1.6 V 111b: 1.8 V
44-42	LSDVTH_G	R/W	000b	Set the Green LED short/weak short circuitry detection threshold (typical) 000b: 0.2 V 001b: 0.4 V 010b: 0.8 V 011b: 1.2 V 100b: 1.6 V 101b: 2 V 110b: 2.4 V 111b: 2.8 V
47-45	LSDVTH_B	R/W	000b	Set the Blue LED short/weak short circuitry detection threshold (typical) 000b: 0.2 V 001b: 0.4 V 010b: 0.8 V 011b: 1.2 V 100b: 1.6 V 101b: 2 V 110b: 2.4 V 111b: 2.8 V

8.7.5 FC4

FC4 is shown in FC4 Register and described in FC4 Register Field Descriptions.

Figure 8-30. FC4 Register

47	46	45	44	43	42	41	40	39	38	37	36	35	34	33	32
RESERVED			DE_COUPLE3_EN	DE_COUPLE3				DE_COUPLE2	FIRST_LINE_DIM				CAURSE_B	CAURSE_G	CAURSE_R
R-000b			R/W-0b	R/W-1000b				R/W-0b	R/W-0000b				R/W-0b	R/W-0b	R/W-0b
31	30	29	28	27	26	25	24	23	22	21	20	19	18	17	16
RESERVED				SR_ON_B		SR_ON_G		SR_ON_R		SR_OFF_B	SR_OFF_G	SR_OFF_R	FINE_B	FINE_G	FINE_R
R-0000b				R/W-01b		R/W-01b		R/W-01b		R/W-0b	R/W-0b	R/W-0b	R/W-0b	R/W-0b	R/W-0b
15	14	13	12	11	10	9	8	7	6	5	4	3	2	1	0
RESERVED	SCAN_REV	RESERVED												IMAX	RESERVED
R-0b	R/W-1b	R-0000 0000 1111b												R/W-0b	R-0b

Table 8-11. FC4 Register Field Descriptions

Bit	Field	Type	Reset	Description
0	RESERVED	R	0b	
1	IMAX	R/W	0b	Set the maximum current of each channel 0b: 10mA maximum 01b: 40 mA maximum
13-2	RESERVED	R	0000 0000 1111b	

Table 8-11. FC4 Register Field Descriptions (continued)

Bit	Field	Type	Reset	Description
14	SCAN_REV	R/W	1b	When 2 device stackable, the scan lines PCB layout is reversed. For the proper scan and SRAM read sequence, SCAN_REV register is provided. 0b: the PCB layout sequence is L0-L15, L16-L31. 1b: the PCB layout sequence is L0-L15, L31-L16.
15	RESERVED	R	0b	
16	FINE_R	R/W	0b	Enable the Red brightness compensation level fine range 0b: disable 1b: enable
17	FINE_G	R/W	0b	Enable the Green brightness compensation level fine range 0b: disable 1b: enable
18	FINE_B	R/W	0b	Enable the Blue brightness compensation level fine range 0b: disable 1b: enable
19	SR_OFF_R	R/W	0b	Slew rate control function when Red turns off operation 0b: slow slew rate. 1b: fast slew rate.
20	SR_OFF_G	R/W	0b	Slew rate control function when Green turns off operation 0b: slow slew rate. 1b: fast slew rate.
21	SR_OFF_B	R/W	0b	Slew rate control function when Blue turns off operation 0b: slow slew rate. 1b: fast slew rate.
23-22	SR_ON_R	R/W	01b	Slew rate control function when Red turns on operation 00b: the slower slew rate. 01b: slow slew rate. 10b: fast slew rate. 11b: the faster slew rate.
25-24	SR_ON_G	R/W	01b	Slew rate control function when Green turns on operation 00b: the slower slew rate. 01b: slow slew rate. 10b: fast slew rate. 11b: the faster slew rate.
27-26	SR_ON_B	R/W	01b	Slew rate control function when Blue turns on operation 00b: the slower slew rate. 01b: slow slew rate. 10b: fast slew rate. 11b: the faster slew rate.
31-28	RESERVED	R	0000b	
32	CAURSE_R	R/W	0b	Enable the Red brightness compensation level caurse range 0b: disable 1b: enable
33	CAURSE_G	R/W	0b	Enable the Green brightness compensation level caurse range 0b: disable 1b: enable
34	CAURSE_B	R/W	0b	Enable the Blue brightness compensation level caurse range 0b: disable 1b: enable
38-35	FIRST_LINE_DIM	R/W	0000b	Adjust the first line dim level 0000b: level 1 ... 0111b: level 8 ... 1111b: level 16
39	DE_COUPLE2	R/W	0b	Decoupling between ON and OFF channels 0b: disabled 1b: enabled

Copyright © 2026 Texas Instruments Incorporated

Table 8-11. FC4 Register Field Descriptions (continued)

Bit	Field	Type	Reset	Description
43-40	DE_COUPLE3	R/W	1000b	Set decoupling enhancement level 0000b: level 1 ... 0111b: level 8 ... 1111b: level 16
44	DE_COUPLE3_EN	R/W	0b	Enable decoupling enhancement 0b: disabled 1b: enabled
47-45	RESERVED	R	000b	

8.7.6 FC14

FC14 is shown in FC14 Register and described in FC14 Register Field Descriptions.

Figure 8-31. FC14 Register

47	46	45	44	43	42	41	40	39	38	37	36	35	34	33	32
RESERVED															
R-0b															
31	30	29	28	27	26	25	24	23	22	21	20	19	18	17	16
RESERVED															
R-0b															
15	14	13	12	11	10	9	8	7	6	5	4	3	2	1	0
RESERVED											LOD_LINE_CMD				
R-0b											R/W-00000b				

Table 8-12. FC14 Register Field Descriptions

Bit	Field	Type	Reset	Description
4-0	LOD_LINE_CMD	R/W	00000b	Locate the line with LED open load warnings: 00000b: Line 0 ... 11111b: Line 31
47-5	RESERVED	R	0b	Reserved bits

8.7.7 FC15

FC15 is shown in FC15 Register and described in FC15 Register Field Descriptions.

Figure 8-32. FC15 Register

47	46	45	44	43	42	41	40	39	38	37	36	35	34	33	32
RESERVED															
R-0b															
31	30	29	28	27	26	25	24	23	22	21	20	19	18	17	16
RESERVED															
R-0b															
15	14	13	12	11	10	9	8	7	6	5	4	3	2	1	0
RESERVED											LSD_LINE_CMD				
R-0b											R/W-00000b				

Table 8-13. FC15 Register Field Descriptions

Bit	Field	Type	Reset	Description
4-0	LSD_LINE_CMD	R/W	00000b	Locate the line with LED short circuitry warnings: 00000b: Line 0 ... 11111b: Line 31
47-5	RESERVED	R	0b	Reserved bits

8.7.8 FC17

FC17 is shown in FC17 Register and described in FC17 Register Field Descriptions.

Figure 8-33. FC17 Register

47	46	45	44	43	42	41	40	39	38	37	36	35	34	33	32
RESERVED															
R-0b															
31	30	29	28	27	26	25	24	23	22	21	20	19	18	17	16
LOD_LINE_WARN[31:16]															
R-0b															
15	14	13	12	11	10	9	8	7	6	5	4	3	2	1	0
LOD_LINE_WARN[15:0]															
R-0b															

Table 8-14. FC17 Register Field Descriptions

Bit	Field	Type	Reset	Description
47-0	LOD_LINE_WARN[47:0]	R	0b	Read the line with LED open load warnings: Bit 0 = 0, Line 0 has no warning; Bit 0 = 1, Line 0 has warning ... Bit 31= 0, Line 31 has no warning; Bit 31= 1, Line 31 has warning

8.7.9 FC19

FC19 is shown in FC19 Register and described in FC19 Register Field Descriptions.

Figure 8-34. FC19 Register

47	46	45	44	43	42	41	40	39	38	37	36	35	34	33	32
RESERVED															
R-0b															
31	30	29	28	27	26	25	24	23	22	21	20	19	18	17	16
LSD_LINE_WARN[31:16]															
R-0b															
15	14	13	12	11	10	9	8	7	6	5	4	3	2	1	0
LSD_LINE_WARN[15:0]															
R-0b															

Table 8-15. FC19 Register Field Descriptions

Bit	Field	Type	Reset	Description
47-0	LSD_LINE_WARN[47:0]	R	0b	Read the line with LED short circuitry warnings: Bit 0 = 0, Line 0 has no warning; Bit 0 = 1, Line 0 has warning ... Bit 31= 0, Line 31 has no warning; Bit 31 = 1, Line 31 has warning

Copyright © 2026 Texas Instruments Incorporated

8.7.10 FC20

FC20 is shown in FC20 Register and described in FC20 Register Field Descriptions.

Figure 8-35. FC20 Register

47	46	45	44	43	42	41	40	39	38	37	36	35	34	33	32
LOD_CH															
R-0b															
31	30	29	28	27	26	25	24	23	22	21	20	19	18	17	16
LOD_CH															
R-0b															
15	14	13	12	11	10	9	8	7	6	5	4	3	2	1	0
LOD_CH															
R-0b															

Table 8-16. FC20 Register Field Descriptions

Bit	Field	Type	Reset	Description
47-0	LOD_CH	R	0b	Locate the LED opem load channel: Bit 0 = 0, CH 0 is normal; Bit 0 = 1, CH 0 is short circuitry ... Bit 47 = 0, CH 47 is normal; Bit 47 = 1, CH 47 is short circuitry

8.7.11 FC21

FC21 is shown in FC21 Register and described in FC21 Register Field Descriptions.

Figure 8-36. FC21 Register

47	46	45	44	43	42	41	40	39	38	37	36	35	34	33	32
LSD_CH															
R-0b															
31	30	29	28	27	26	25	24	23	22	21	20	19	18	17	16
LSD_CH															
R-0b															
15	14	13	12	11	10	9	8	7	6	5	4	3	2	1	0
LSD_CH															
R-0b															

Table 8-17. FC21 Register Field Descriptions

Bit	Field	Type	Reset	Description
47-0	LSD_CH	R	0b	Locate the LED short circuitry channel: Bit 0 = 0, CH 0 is normal; Bit 0 = 1, CH 0 is short circuitry ... Bit 47 = 0, CH 47 is normal; Bit 47 = 1, CH 47 is short circuitry

Copyright © 2026 Texas Instruments Incorporated

9 Application and Implementation

Note

Information in the following applications sections is not part of the TI component specification, and TI does not warrant its accuracy or completeness. TI's customers are responsible for determining suitability of components for their purposes, as well as validating and testing their design implementation to confirm system functionality.

9.1 Application Information

The LP5891-Q1 integrates 48 constant current sources and 16 scanning FETs. A single LP5891-Q1 is capable of driving 16 × 16 RGB LED pixels while stacking two LP5891-Q1 devices can drive 32 × 32 RGB LED pixels. To achieve low power consumption, the LP5891-Q1 supports separated power supplies for the red, green, and blue LEDs by the common cathode structure.

The LP5891-Q1 implements a high speed rising edge transmission interface (up to 50 MHz) to support high device count daisy-chained and high refresh rate while minimizing electrical-magnetic interference (EMI). SCLK must be continuous, no matter there is data on SIN or not, because SCLK is not only used to sample the data on SIN, but also used as a clock source to generate GCLK by internal frequency multiplier. Based on rising-edge CCSI protocol, all the commands/FC registers/SRAM data are written from the SIN input terminal, and all the FC registers/ LED open and short flag can be read out from the SOUT output terminal. The device supports up to 160MHz GCLK frequency and can achieve 16-bit PWM resolution, with 3840Hz or even higher refresh rate.

Meanwhile, the LP5891-Q1 integrates enhanced circuits and intelligent algorithms to solve the various display challenges in Narrow Pixel Pitch (NPP) LED display applications and mini and micro-LED products: dim at the first scan line, upper and downside ghosting, non-uniformity in low grayscale, coupling, caterpillar caused by open or short LEDs, which make the LP5891-Q1 the choice in such applications.

The LP5891-Q1 also implements LED open, weak short, short detections and removals during operations and can also report this information out to the accompanying digital processor.

Copyright © 2026 Texas Instruments Incorporated

9.2 Typical Application

The LP5891-Q1 are typically connected in series in a daisy-chain to drive the LED matrix with only a few controller ports. Figure 9-1 shows a typical application diagram with two LP5891-Q1 devices stackable connection to drive 32 × 32 RGB LED pixels.

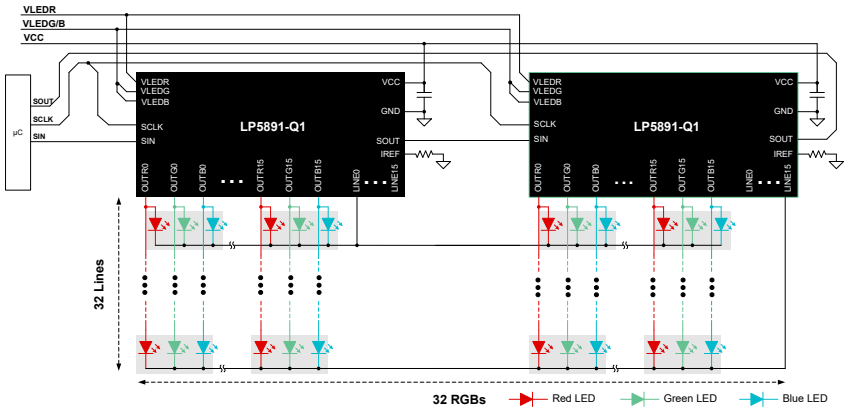

Figure 9-1. LP5891-Q1 with Dual Devices Stackable Connection

9.2.1 Design Requirements

Taking 4K micro-LED television for example, the resolution of the screen is 3840 × 2160, and the screen consists of many modules. The following sections show an example to build a LED display module with 240 × 180 pixels.

The example uses the following values as the system design parameters.

Table 9-1. LP5891-Q1 Design Parameters

DESIGN PARAMETER	EXAMPLE VALUE
V_{CC} and V_R	2.8V
V_G and V_B	3.8V
Maximum current per LED	I_{RED} = 3mA, I_{GREEN} = 2mA, I_{BLUE} = 1mA
PWM resolution	14 bits
Frame rate	120Hz
Refresh rate	3840Hz
Display module size	240 × 180 pixels
cascaded devices number	8
devices number per LED display module	96

9.2.1.1 System Structure

To build an LED display module with 240 × 180 pixels, 96 LP5891-Q1 devices are required.

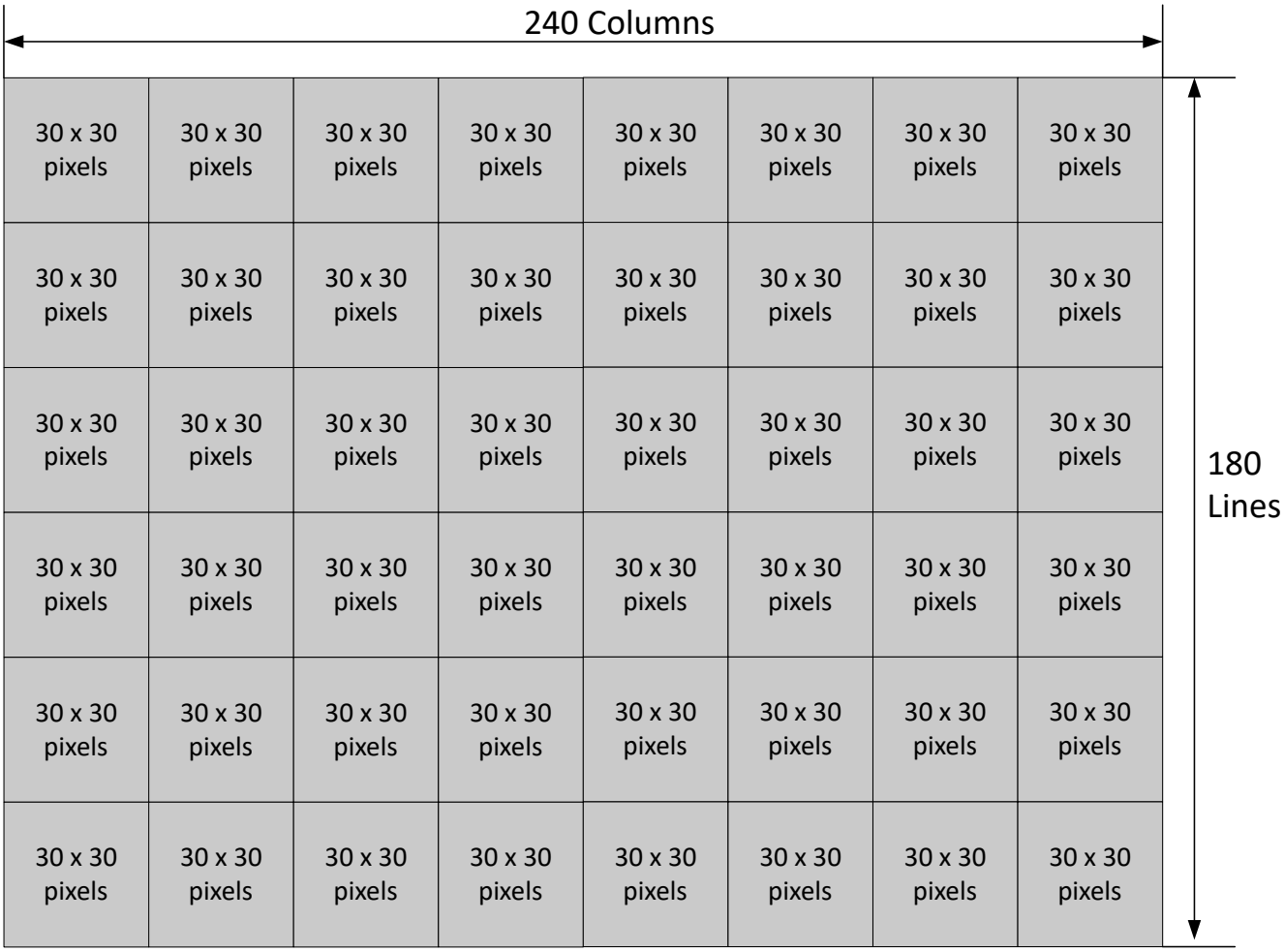

Figure 9-2. LED Display Module

As shown in Figure 9-2, the total module can be divided into 48 32 × 32 matrix. Each matrix includes two devices with stackable connection.

Note

To achieve the best performance, distribute the redundant channels and lines to each 32 × 32 matrix. For this case, two Red/Green/Blue channels and two lines are not used in each matrix. And these unused pins can be floated. For the software, TI suggests zero data to send to the unused channels. There is no need to send the zero data to unused lines.

Copyright © 2026 Texas Instruments Incorporated

9.2.1.2 SCLK Frequency

The SCLK frequency is determined by the data volume of one frame and frame rate. In this application, the data volume V_Data is 30 × 32 × 48 bits × 4 = 184.32 Kb, the frame rate is 120 Hz. Suppose the data transmission efficiency is 0.8, the minimum frequency of SCLK must be: f_{SCLK} = V_Data × f_{frame} / 0.8. So the minimum SCLK frequency is 27.65 MHz with rising-edge transmission.

9.2.1.3 Internal GCLK Frequency

The internal GCLK frequency is configured by the Frequency Multiplier (FREQ_MUL), and is determined by the PWM resolution. The GCLK frequency can be calculated by the below equations:

$$N_{sub_period} = \frac{f_{refresh_rate}}{f_{frame_rate}}$$

$$GS_{max} = 2^K$$

$$GS_{max} = N_{GCLK_Seg} \times N_{sub_period}$$

$$\frac{1}{f_{frame_rate}} = \left(\frac{N_{GCLK_Seg}}{f_{GCLK}} + T_{SW} \right) \times N_{Scan_line} \times N_{sub_period} + T_{Blank} \quad (3)$$

where

- $f_{refresh_rate}$ means the refresh rate
- f_{frame_rate} means the frame rate
- K means the PWM resolution
- N_{sub_period} means the sub-period numbers within one frame
- N_{GCLK_seg} means the GCLK number per segment (line switch time excluded)
- f_{GCLK} means GCLK frequency
- T_{SW} means line switching time
- N_{scan_line} means the scan line number
- T_{blank} means the blank time in one frame, equals to 0 in ideal configuration
- GS_{max} means the maximum grayscale that the device can output in one frame

Table 9-2 gives the values based on the system configuration and equation.

Table 9-2. LP5891-Q1 Design Parameters for GCLK Frequency Calculation

DESIGN PARAMETER	EXAMPLE VALUE
N_{sub_period}	32
N_{scan_line}	30
T_{SW}	1.5 µs
T_{blank}	0
N_{GCLK_seg}	512
GS_{max}	16383
f_{GCLK}	71.3 MHz

Considering SCLK frequency and FREQ_MUL, the SCLK can be 27.7 MHz, and FREQ_MUL can be 0010b. So the GCLK is 83.1 MHz.

9.2.1.4 Line Switch Time

The line switch time is digitalized with the GCLK number and can be set by the LINE_SWT (Bit 40-37 in FC1 register). In this application, it is 1.5 us × 83.1 MHz = 125 GCLKs, so the LINE_SWT equals to 0011b (120 GCLKs), the actual line switch time is 1.44 us.

9.2.1.5 Blank Time Removal

The LP5891-Q1 has an algorithm to distribute the blank time into each sub-period to prevent the black field when taking photos or video.

From Equation 3, 83.1-MHz GCLK frequency and 1.44-us line switch time, the calculated blank time is 1.0361 ms (86100 GCLK), which is too long and brings black field.

Here are detailed steps of the algorithm.

Step 1: Distribute blank time into each segment

When the blank GCLK number is larger than $N_{sub_period} \times N_{scan_line}$, it can be distributed into each segment.

In this application, the blank GCLK number is 86100, and $N_{sub_period} \times N_{scan_line}$ is 960, so the distributed GCLK number in each segment is 86100/960 = 89...660. These 89 GCLKs can be used to increase PWM length or extend line switch time. If used to increase PWM length, the GCLK number in each segment will be 512 + 89 = 601, so the SEG_LENGTH (Bit9-0 in FC1 register) is 1001011001b.

Step 2: Distribute blank time into each sub-period

If the left GCLK number is larger than N_{sub_period}, it can be distributed into each sub-period.

In this application, the left GCLK is 660, the distributed GCLK number in each sub-period is 660/32=20. The BLK_ADJ (Bit46-41 in FC1 register) is 010100b.

After distributing into each sub-period, the left GCLK number is 0.

9.2.1.6 BC and CC

Select the reference current-setting resistor R_{IREF} and configure a proper BC value to set the maximum current of the RGB LEDs (see *Brightness Control (BC) Function* for more details). Here the maximum current is 3 mA, BC value is 03h, according to equation Equation 1, the reference resistor value is 0.8 V/3 mA × 86.61 = 23 kΩ.

Configure the CC_R/CC_G/CC_B registers to set the current of Red/Green/Blue LED current to 3 mA/2 mA/1 mA (see *Color Brightness Control (CC) Function* for more details).

Table 9-3 shows the reference current setting resistor R_{IREF}, BC and CC_R/CC_G/CC_B register value.

Table 9-3. Current Setting Value

DESIGN PARAMETER	EXAMPLE VALUE
R_{IREF}	23 kΩ
BC	011 b
CC_R	11111110 b
CC_G	10101001 b
CC_B	01010100 b

Copyright © 2026 Texas Instruments Incorporated

9.2.2 Detailed Design Procedure

Figure 9-3 gives a detail design procedure for LED display. After power on and digital signals are ready, the first step for the controller is to send the chip index command to let the devices know their identifications. Then, the command sends the configuration data to the FC registers. After this, it sends the VSYNC at the beginning of each frame and also sends the data to each device. The devices displays the data of last frame when the VSYNC comes and meanwhile receive the data of current frame transmitted from controller. The registers can be read at anytime of the frame.

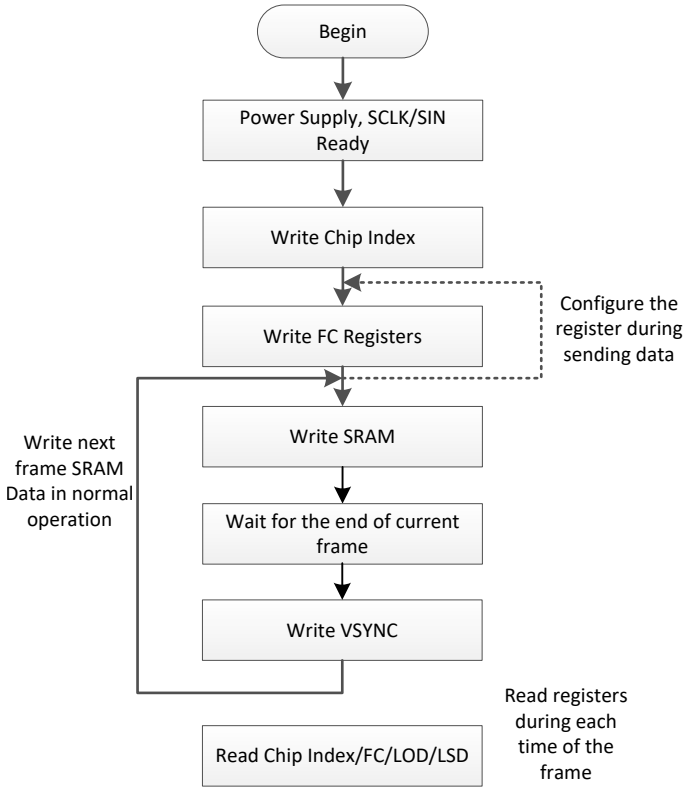

Figure 9-3. Design Procedure for LED Display

9.2.2.1 Chip Index Command

The chip index is used to distribute the address of the devices in a data chain. Each device gets a unique address by this command. Details can be found in *Chip Index Write Command*.

9.2.2.2 FC Registers Settings

Some bits of FC0, FC1, FC2, FC3 registers must be configured properly before the devices work normally. In this application, the registers value can be:

Table 9-4. FC Registers Value

FC Registers	Register Value(BIN)	Register Value(HEX)
FC0	0001 0000 0000 0000 0101 1000 0011 1111 0000 0001 0000 0111 b	1000 583F 0107 h
FC1	0010 1010 1110 0000 0000 0000 1001 0100 1010 0110 0011 0001 b	2AE0 0094 A631 h
FC2	0000 1000 0000 0000 0000 0000 0000 1111 0000 0110 0110 0110 b	0800 000F 0666 h
FC3	0000 0000 0011 1011 0101 0100 1010 1001 1111 1111 0000 0000 b	003B 54A9 FF00 h

The controller can configure the FC by the data write command with broadcast mode (see *Data Write Command* for more detail), the FC0, FC1 registers are updated after the VSYNC command comes, and the other FC registers are updated right away regardless the VSYNC command.

9.2.2.3 Grayscale Data Write

The channel grayscale data is written to SRAM of the device by the data write command with non-broadcast way, details can be found in *Data Write Command* and *Write a Frame Data into Memory Book*.

Data Write Flow is the data write flow for this application, P (i, j) is the data of pixel locating in I + 1 row and j + 1 column. Suppose channel R15/G15/B15 of each device is not used and not connected, the channel R14/G14/B14 is connected to P(i, 0), the channel R13/G13/B13 is connected to P (i, 1),…, and channel R0/G0/B0 is connected to P (i, 14). The data of unused channel must be zero noting D_Zero in below figure, and D_Zero = 00000000000000001 00000000000000001 00000000000000001b.

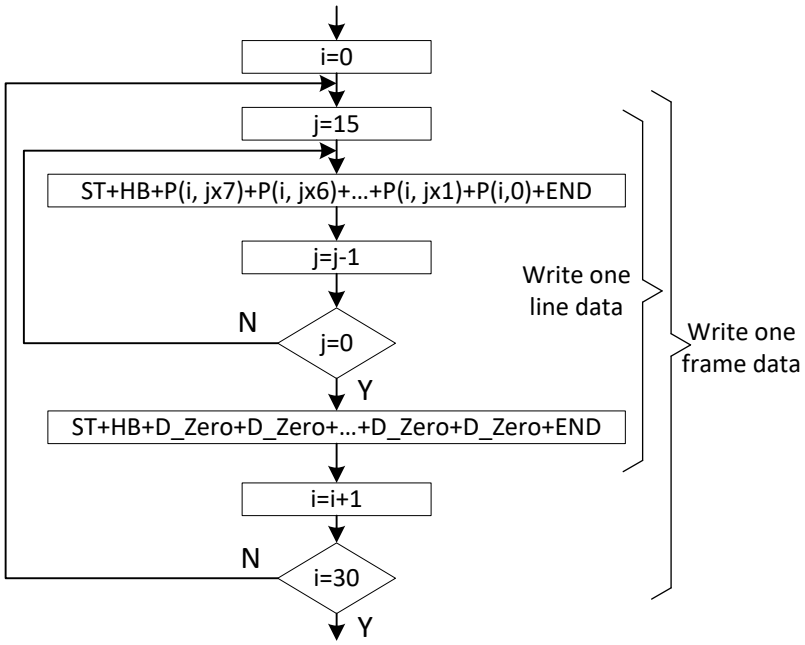

Figure 9-4. Data Write Flow

9.2.2.4 VSYNC Command

The VSYNC is used to sync the display of each frame for the devices in a cascaded chain. Details can be found in *VSYNC Write Command*.

9.2.2.5 LED Open, Short Read

FC14, FC15, FC17, FC19, FC20, FC21 are the read command for LOD/LSD information. Details can be found in *Read LED-open Information* and *Read LED-short Information*.

Copyright © 2026 Texas Instruments Incorporated

9.2.3 Application Curves

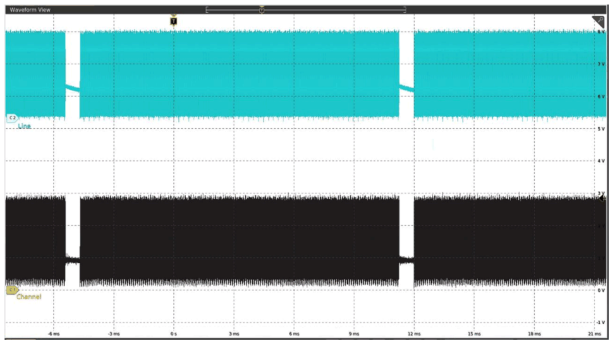

Figure 9-5. Line and Channel Waveform in One Frame (GSn = 0xFFFFh)

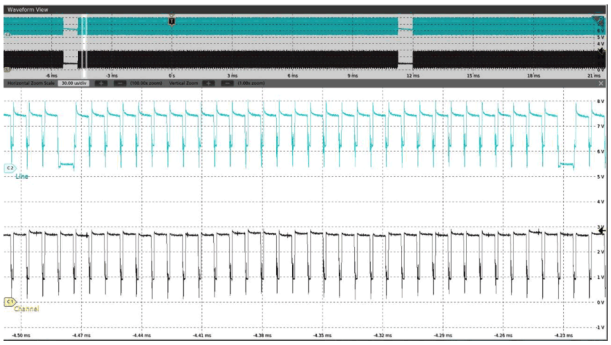

Figure 9-6. Line and Channel Waveform in One Subperiod (GSn = 0xFFFFh)

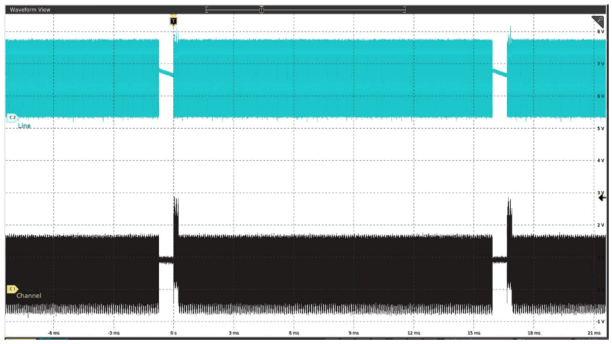

Figure 9-7. Line and Channel Waveform in One Frame (GSn = 0x0001h)

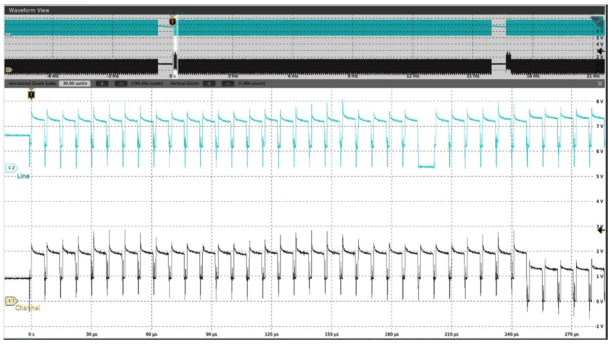

Figure 9-8. Line and Channel Waveform in One Frame (GSn = 0x0001h)

9.3 Power Supply Recommendations

Decouple the VCC power supply voltage by placing a 0.1µF ceramic capacitor close to VCC pin and GND plane. Depending on panel size, several electrolytic capacitors must be placed on the board equally distributed to get well regulated LED supply voltage VR/VG/VB. The ripple of the LED supply voltage must be less than 5% of their nominal value. Generally, the green and blue LEDs have the similar forward voltage, they can be supplied by the same power rail.

Furthermore, the VR > Vf(R) + 0.35V (10mA constant current example), the VG = VB > Vf (G/B) + 0.35V (10mA constant current example), here Vf(R), Vf(G/B) are representative for the maximum forward voltage of red, green/blue LEDs.

To simplify the power design, VCC can be connected to the VR power rail.

9.4 Layout

9.4.1 Layout Guidelines

- Place the decoupling capacitor near the VCC/VR, VG/VB pins and GND plane.
- Place the current programming resistor RIREF close to IREF pin and GND plane.
- Route the GND thermal pad as widely as possible for large GND currents. Maximum GND current is approximately 2A for one device (48-CH × 40mA = 1.92A).
- The Thermal Pad must be connected to GND plane because the pad is used as power ground pin internally. There is a large current flow through this pad when all channels turn on. Furthermore, this pad must be connected to a heat sink layer by thermal via to reduce device temperature. For more information about suggested thermal via pattern and via size, see *PowerPAD™ Thermally Enhanced Package* application note.
- Routing between the LED Anode side and the device OUTXn pin must be as short and straight as possible to reduce wire inductance.
- The line switch pins must be located in the middle of the matrix, which must be laid out as symmetrically as possible.

9.4.2 Layout Example

To simplify the system power rails design, VR, VCC must use one power rail and VG, VB use another power rail. The image below gives an example for power rails routing.

Connect the GND pin to the thermal pad on the board with the shortest wire and the thermal pad is connected to GND plane with the vias, as many as possible to help the power dissipation.

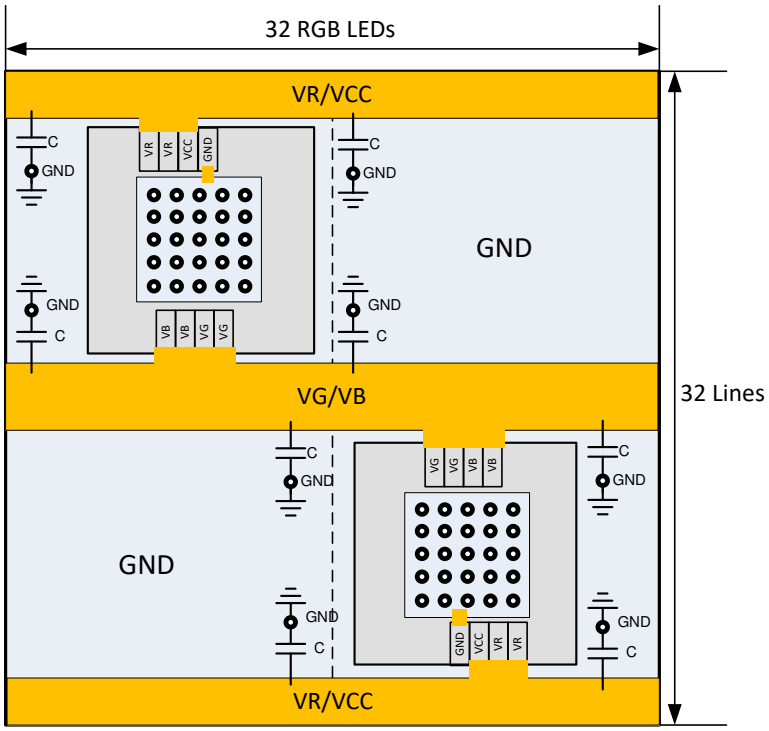

Figure 9-9. Power Rails Routing Suggestion

Copyright © 2026 Texas Instruments Incorporated

The image below gives an example for line routing. Connect the line switch to the center of the line bus, so as to uniform the current flowing from the line switch to the left side and right side LEDs in white grayscale. With this connection, the unbalance of the parasitic inductor from the routing is the smallest and the display performance is better, especially in low grayscale condition.

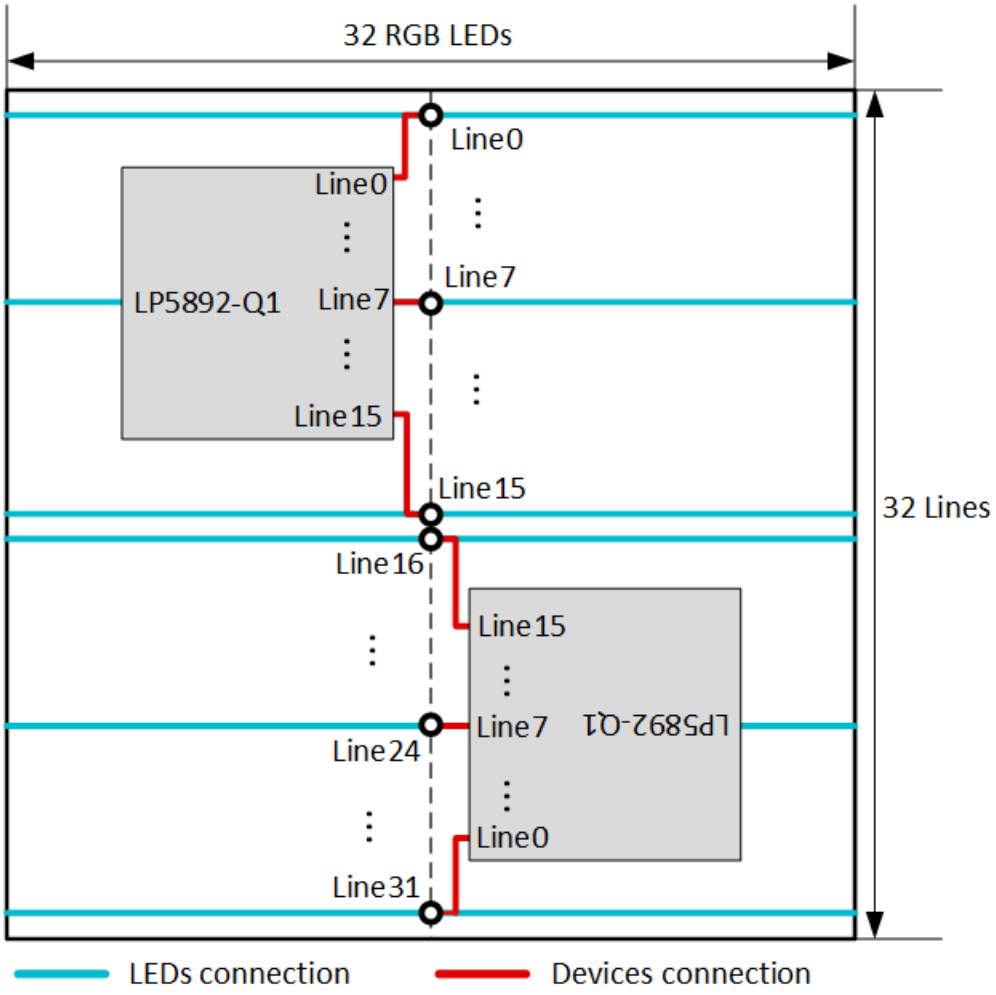

Figure 9-10. Line Routing Suggestion

The image below gives an example for channel routing with the shortest wire. With this connection, the channel to the LED path is the shortest, which can reduce the wire inductance, and be a benefit to the performance. However, the data transmission sequence must be adjusted to follow the pins routing map. For example, R0 connects to column 15 (LED15). The first data must be column 15 (LED15) rather than column 0 (LED0).

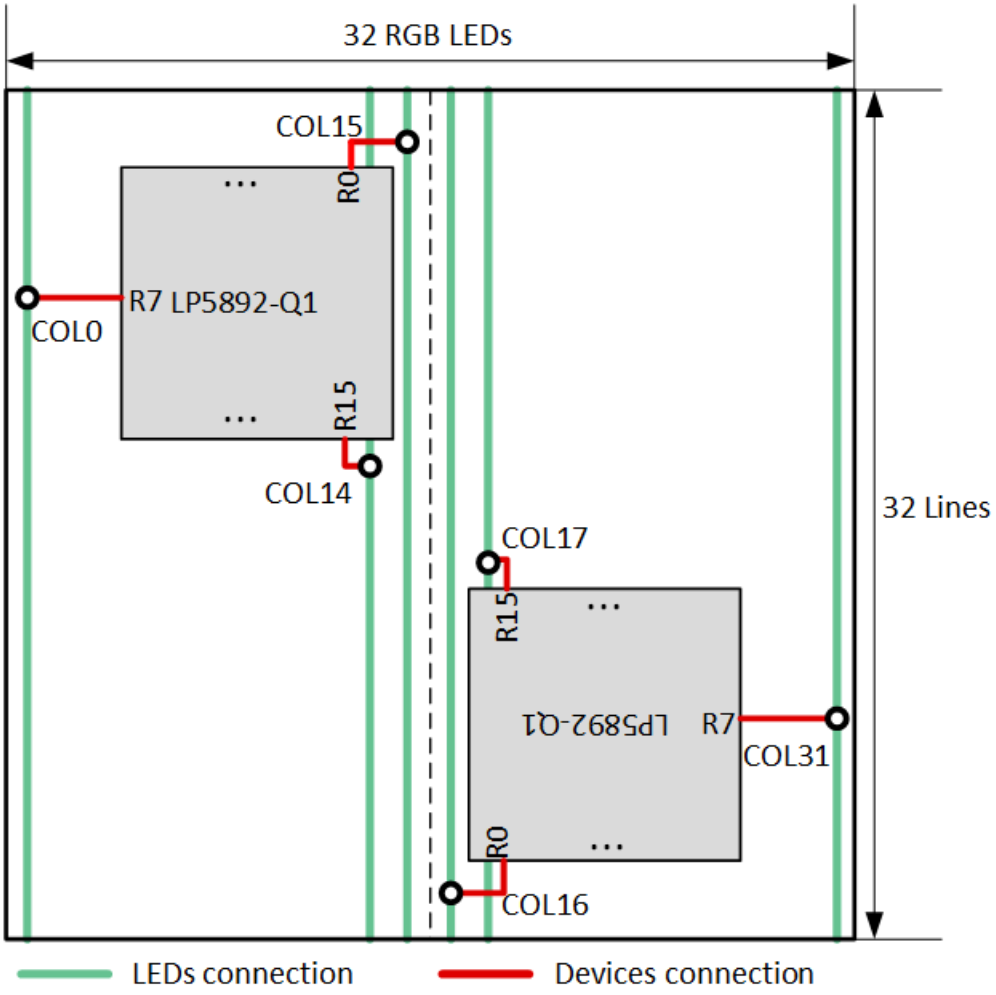

Figure 9-11. Channel Routing Suggestion with Shortest Wire

Copyright © 2026 Texas Instruments Incorporated

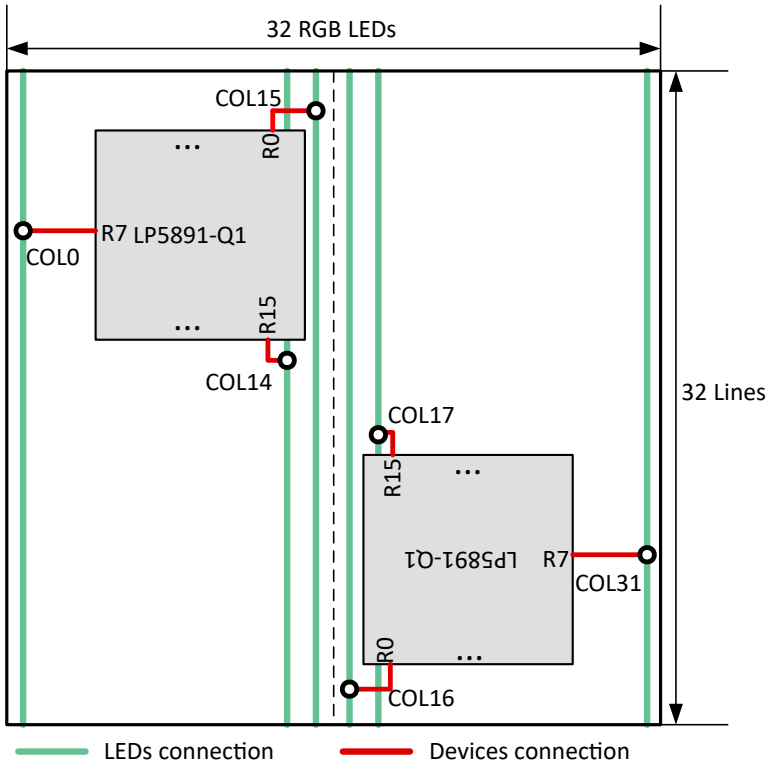

Figure 9-12. Channel Routing Suggestion with Shortest Wire

The image below gives an example for channel routing with pin number sequence. With this connection, the data transmission sequence is the same with pin number sequence. For example, R0 connects to column 0 (LED0). The first data is column 0 (LED0). However, with this connection, the inductance for each channel can be different, which can bring a slight difference for the worst case.

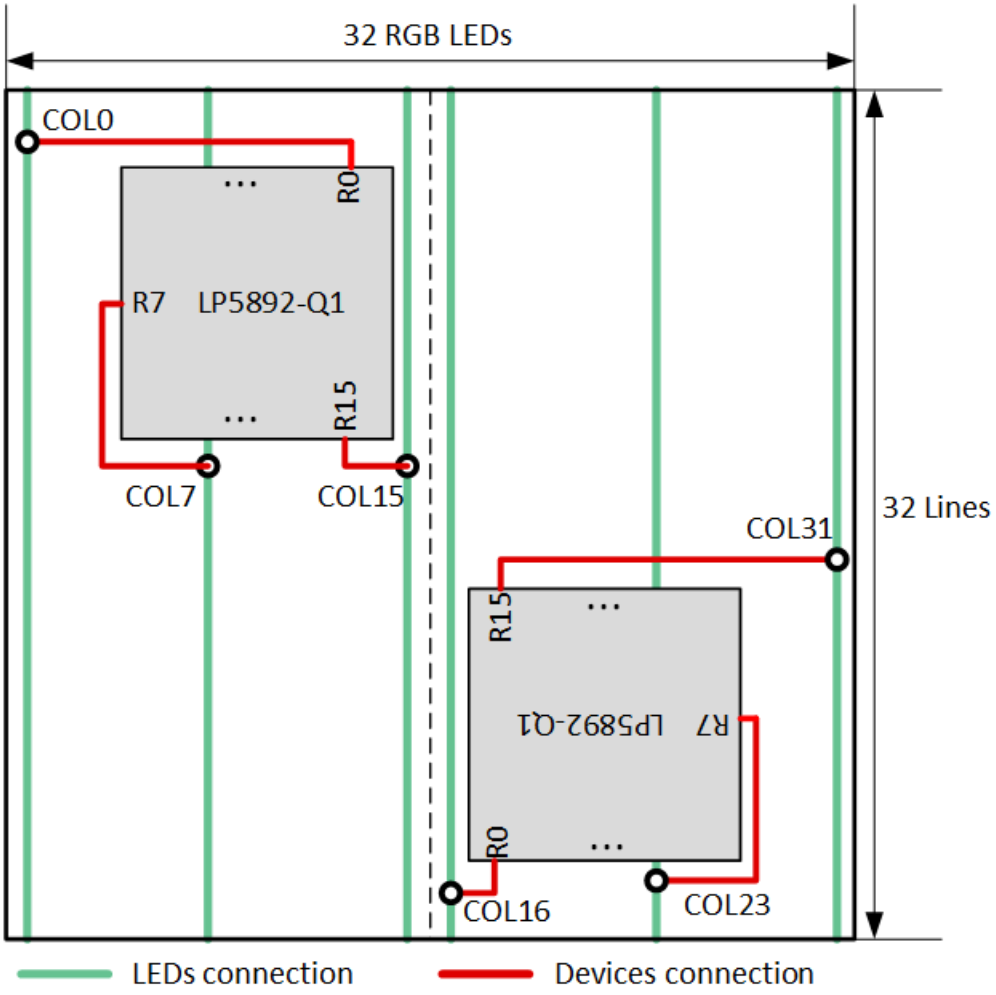

Figure 9-13. Channel Routing Suggestion with Channel Order Sequence

Copyright © 2026 Texas Instruments Incorporated

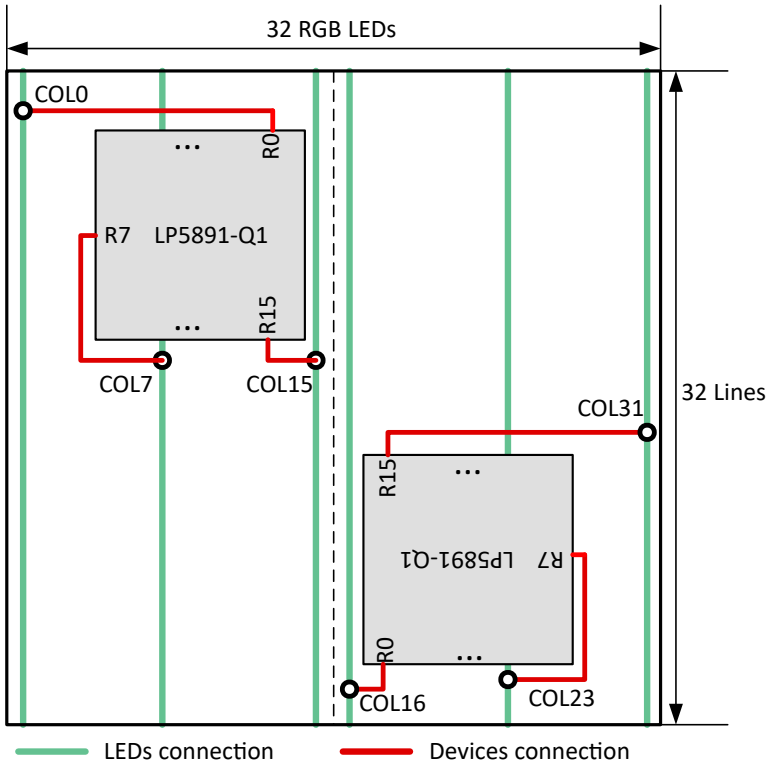

Figure 9-14. Channel Routing Suggestion with Channel Order Sequence

10 Device and Documentation Support

10.1 Documentation Support

10.1.1 Related Documentation

Texas Instruments, *PowerPAD™ Thermally Enhanced Package* application note

10.2 Receiving Notification of Documentation Updates

To receive notification of documentation updates, navigate to the device product folder on ti.com. Click on *Notifications* to register and receive a weekly digest of any product information that has changed. For change details, review the revision history included in any revised document.

10.3 Support Resources

TI E2E™ support forums are an engineer's go-to source for fast, verified answers and design help — straight from the experts. Search existing answers or ask your own question to get the quick design help you need.

Linked content is provided "AS IS" by the respective contributors. They do not constitute TI specifications and do not necessarily reflect TI's views; see TI's Terms of Use.

10.4 Trademarks

TI E2E™ is a trademark of Texas Instruments.
All trademarks are the property of their respective owners.

10.5 Electrostatic Discharge Caution

This integrated circuit can be damaged by ESD. Texas Instruments recommends that all integrated circuits be handled with appropriate precautions. Failure to observe proper handling and installation procedures can cause damage.

ESD damage can range from subtle performance degradation to complete device failure. Precision integrated circuits may be more susceptible to damage because very small parametric changes could cause the device not to meet its published specifications.

10.6 Glossary

TI Glossary	This glossary lists and explains terms, acronyms, and definitions.

Copyright © 2026 Texas Instruments Incorporated

11 Mechanical, Packaging, and Orderable Information

The following pages include mechanical, packaging, and orderable information. This information is the most current data available for the designated devices. This data is subject to change without notice and revision of this document. For browser-based versions of this data sheet, refer to the left-hand navigation.

PACKAGING INFORMATION

Orderable part number	Status (1)	Material type (2)	Package | Pins	Package qty | Carrier	RoHS (3)	Lead finish/ Ball material (4)	MSL rating/ Peak reflow (5)	Op temp (°C)	Part marking (6)
LP5891QRRFRQ1	Active	Production	VQFN (RRF) | 76	2000 | LARGE T&R	Yes	NIPDAU	Level-3-260C-168 HR	-40 to 125	LP5891Q
LP5891QRRFRQ1.A	Active	Production	VQFN (RRF) | 76	2000 | LARGE T&R	Yes	NIPDAU	Level-3-260C-168 HR	-40 to 125	LP5891Q

(1) **Status:** For more details on status, see our product life cycle.

(2) **Material type:** When designated, preproduction parts are prototypes/experimental devices, and are not yet approved or released for full production. Testing and final process, including without limitation quality assurance, reliability performance testing, and/or process qualification, may not yet be complete, and this item is subject to further changes or possible discontinuation. If available for ordering, purchases will be subject to an additional waiver at checkout, and are intended for early internal evaluation purposes only. These items are sold without warranties of any kind.

(3) **RoHS values:** Yes, No, RoHS Exempt. See the TI RoHS Statement for additional information and value definition.

(4) **Lead finish/Ball material:** Parts may have multiple material finish options. Finish options are separated by a vertical ruled line. Lead finish/Ball material values may wrap to two lines if the finish value exceeds the maximum column width.

(5) **MSL rating/Peak reflow:** The moisture sensitivity level ratings and peak solder (reflow) temperatures. In the event that a part has multiple moisture sensitivity ratings, only the lowest level per JEDEC standards is shown. Refer to the shipping label for the actual reflow temperature that will be used to mount the part to the printed circuit board.

(6) **Part marking:** There may be an additional marking, which relates to the logo, the lot trace code information, or the environmental category of the part.

Multiple part markings will be inside parentheses. Only one part marking contained in parentheses and separated by a "~" will appear on a part. If a line is indented then it is a continuation of the previous line and the two combined represent the entire part marking for that device.

Important Information and Disclaimer: The information provided on this page represents TI's knowledge and belief as of the date that it is provided. TI bases its knowledge and belief on information provided by third parties, and makes no representation or warranty as to the accuracy of such information. Efforts are underway to better integrate information from third parties. TI has taken and continues to take reasonable steps to provide representative and accurate information but may not have conducted destructive testing or chemical analysis on incoming materials and chemicals. TI and TI suppliers consider certain information to be proprietary, and thus CAS numbers and other limited information may not be available for release.

In no event shall TI's liability arising out of such information exceed the total purchase price of the TI part(s) at issue in this document sold by TI to Customer on an annual basis.

OTHER QUALIFIED VERSIONS OF LP5891-Q1 :

- Catalog : LP5891

NOTE: Qualified Version Definitions:

- Catalog - TI's standard catalog product

TAPE AND REEL INFORMATION

REEL DIMENSIONS

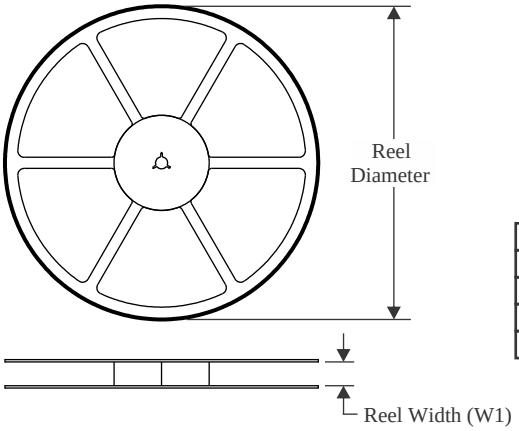

TAPE DIMENSIONS

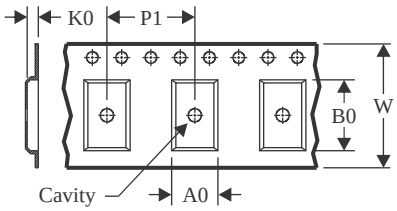

A0	Dimension designed to accommodate the component width
B0	Dimension designed to accommodate the component length
K0	Dimension designed to accommodate the component thickness
W	Overall width of the carrier tape
P1	Pitch between successive cavity centers

QUADRANT ASSIGNMENTS FOR PIN 1 ORIENTATION IN TAPE

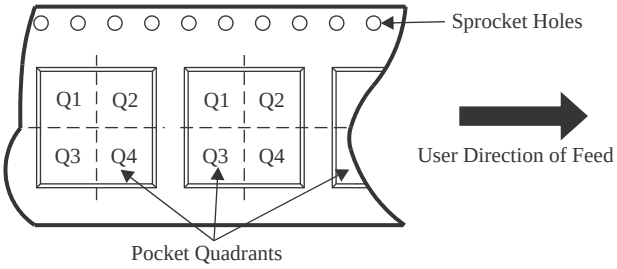

*All dimensions are nominal

Device	Package Type	Package Drawing	Pins	SPQ	Reel Diameter (mm)	Reel Width W1 (mm)	A0 (mm)	B0 (mm)	K0 (mm)	P1 (mm)	W (mm)	Pin1 Quadrant
LP5891QRRFRQ1	VQFN	RRF	76	2000	330.0	16.4	9.3	9.3	1.1	12.0	16.0	Q2

TAPE AND REEL BOX DIMENSIONS

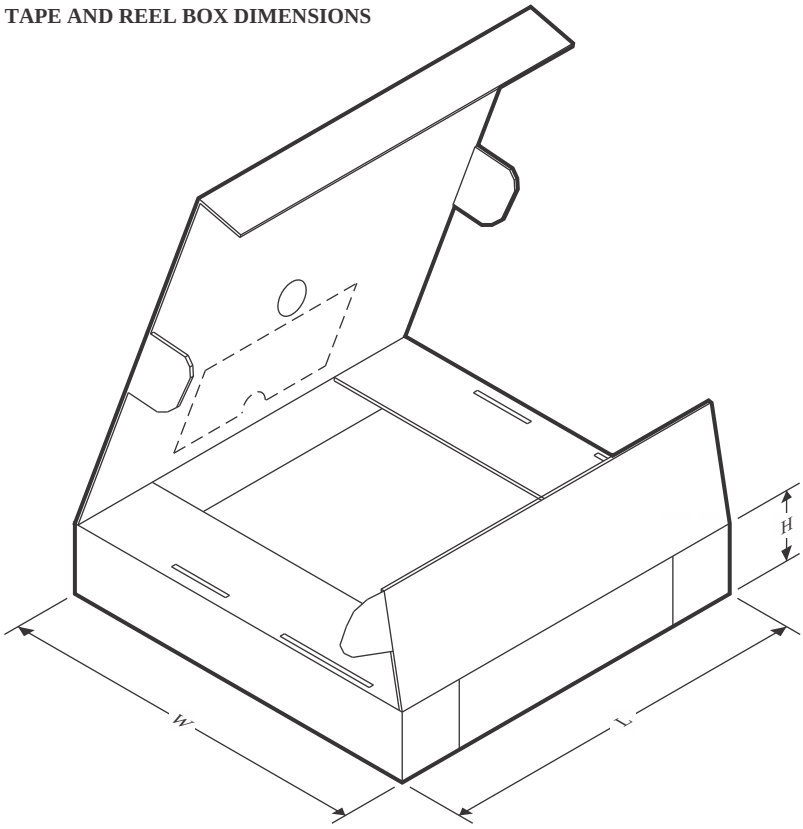

*All dimensions are nominal

Device	Package Type	Package Drawing	Pins	SPQ	Length (mm)	Width (mm)	Height (mm)
LP5891QRRFRQ1	VQFN	RRF	76	2000	367.0	367.0	35.0

GENERIC PACKAGE VIEW

RRF 76

VQFN - 1 mm max height

9 x 9, 0.4 mm pitch

PLASTIC QUAD FLATPACK - NO LEAD

This image is a representation of the package family, actual package may vary.
Refer to the product data sheet for package details.

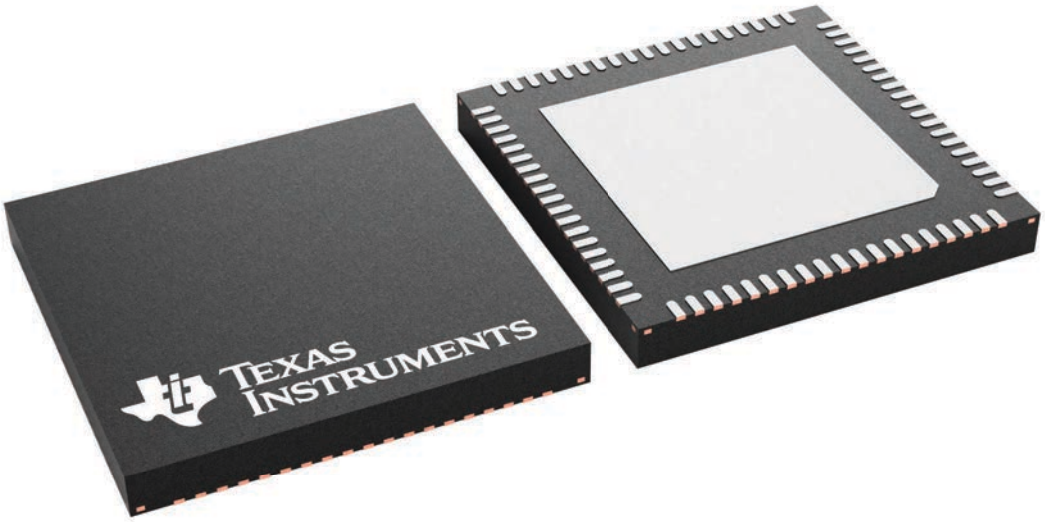

4232009/A

IMPORTANT NOTICE AND DISCLAIMER

TI PROVIDES TECHNICAL AND RELIABILITY DATA (INCLUDING DATASHEETS), DESIGN RESOURCES (INCLUDING REFERENCE DESIGNS), APPLICATION OR OTHER DESIGN ADVICE, WEB TOOLS, SAFETY INFORMATION, AND OTHER RESOURCES “AS IS” AND WITH ALL FAULTS, AND DISCLAIMS ALL WARRANTIES, EXPRESS AND IMPLIED, INCLUDING WITHOUT LIMITATION ANY IMPLIED WARRANTIES OF MERCHANTABILITY, FITNESS FOR A PARTICULAR PURPOSE OR NON-INFRINGEMENT OF THIRD PARTY INTELLECTUAL PROPERTY RIGHTS.

These resources are intended for skilled developers designing with TI products. You are solely responsible for (1) selecting the appropriate TI products for your application, (2) designing, validating and testing your application, and (3) ensuring your application meets applicable standards, and any other safety, security, regulatory or other requirements.

These resources are subject to change without notice. TI grants you permission to use these resources only for development of an application that uses the TI products described in the resource. Other reproduction and display of these resources is prohibited. No license is granted to any other TI intellectual property right or to any third party intellectual property right. TI disclaims responsibility for, and you fully indemnify TI and its representatives against any claims, damages, costs, losses, and liabilities arising out of your use of these resources.

TI’s products are provided subject to TI’s Terms of Sale, TI’s General Quality Guidelines, or other applicable terms available either on ti.com or provided in conjunction with such TI products. TI’s provision of these resources does not expand or otherwise alter TI’s applicable warranties or warranty disclaimers for TI products. Unless TI explicitly designates a product as custom or customer-specified, TI products are standard, catalog, general purpose devices.

TI objects to and rejects any additional or different terms you may propose.

Copyright © 2026, Texas Instruments Incorporated

Last updated 10/2025